APPENDIX D: ADAMS STREET SITE – SURVEY AND VERNAL POOL DATA

Natural Heritage & Endangered Species Program

VERNAL POOL CERTIFICATION FORM
Certified Pool Number 644

Town/City: ACTON

Date of Certification: 9-15-94

USGS topographic map name: MAYNARD

Date Documentation Submitted: 5-2-94

Date Conservation Commission and DEP notified: 9-15-94

Directions to site: FROM PARKER STREET TURN ONTO ADAMS. PULL OVER ACROSS FROM FIRST HOUSE ON LEFT, POOL IS OVER HILL TO S, VISIBLE FROM THE ROAD.

Name of property owner(s) as indicated on assessor's map: MUNICIPAL LAND, TOWN OF ACTON

The following items are being attached to this form

- XX USGS topographic map showing location of the vernal pool
- XX Assessor's map (or other property map) showing location of the pool
- XX Compass bearings and distances to the pool from permanent landmarks
- ____ Aerial photograph/80 or 100 scale topographic map showing location of the pool
- ____ Professional survey showing location of the pool
- ____ Sketch map or description of the immediate vicinity of the pool

Documented Biological Indicators Accepted by NHESP

- XX Obligate amphibian species (mole salamanders/wood frogs)
- XX Obligate invertebrate species (fairy shrimp)
- ____ Facultative amphibian/reptile species
- ____ Facultative invertebrate species
- ____ Other wildlife
- ____ Wetland plants

The NHESP HAS NOT been notified of the presence of rare state-listed wildlife species in this vernal pool habitat.

Wetland Resource Area Information (to be determined by Conservation Commission)

- ____ Land Subject to Flooding (100-year floodplain)
- ____ Isolated Land Subject to Flooding
- ____ Bordering Vegetated Wetland
- ____ Land Under Water Body (permanent pond)
- ____ Coastal Dune/Barrier Beach
- ____ Town Wetland Bylaw
- ____ No jurisdiction

South Acton
Great Hill
Mt Hope Cem
Muddy Brook
Brook
Fort Pond
Faulkner Hill
Barters Pond
Golf Course
Sewage Disposal
Maynard
Summer Hill
Reservoir
Townhall
St Bridgets Sch
Green Meadow Sch
High Sch
Glenwood Cem
St Bridgets Cem
Gravel Pit
Substa
Vose Hill
Pumping Sta
Sewage Disposal
Picnic
M A Y N A R D
645
644
B Butler
4/28/94

DRIVE
DRIVE
ROBERT ROAD
STREET
PARKER
No Layout
ADAMS
STREET
210
210
210
200
190
180
Dry Depression
185°(F)
122 pares
E

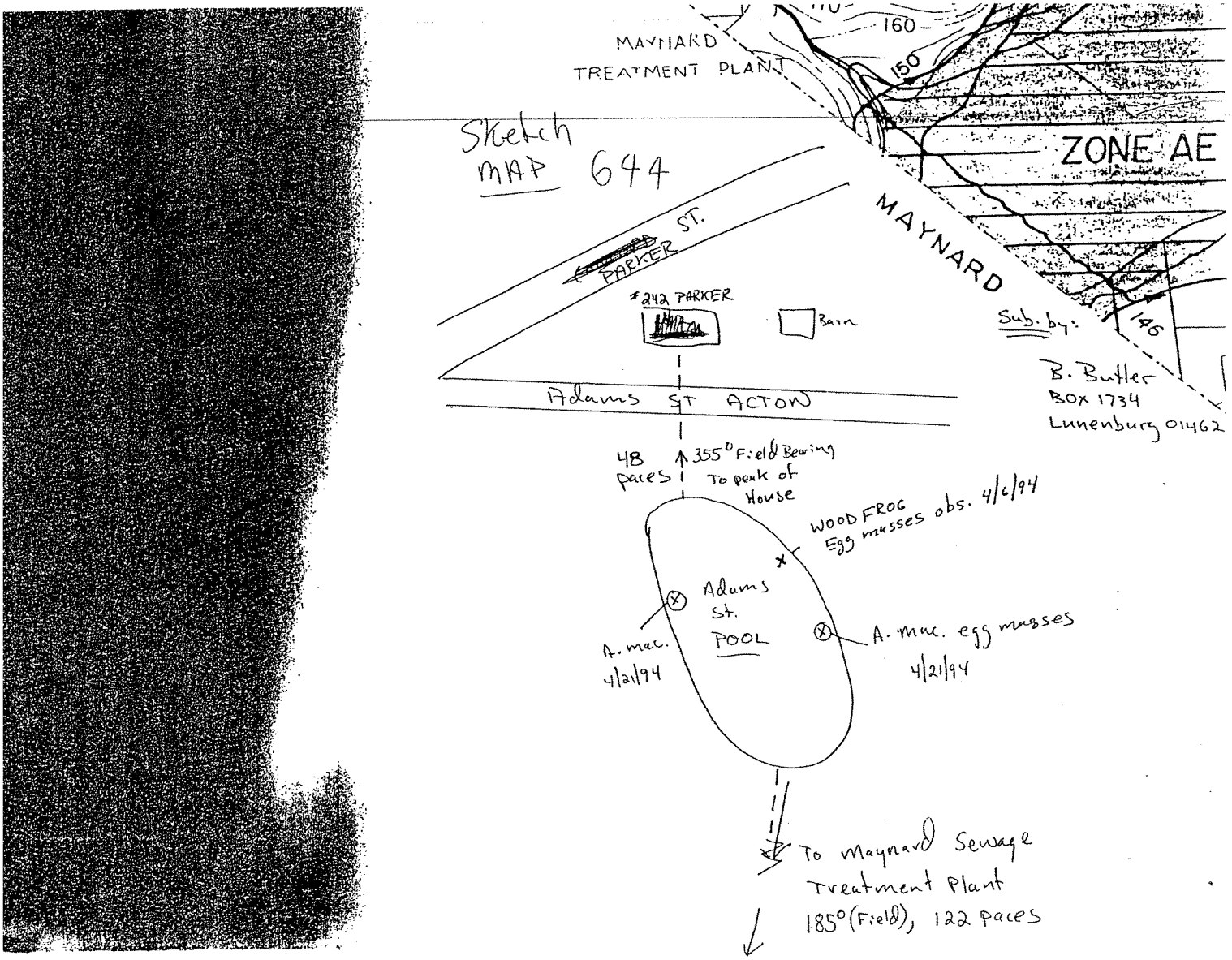
MAYNARD
TREATMENT PLANT
160
150
ZONE AE
Sketch
MAP 644
PARKER ST.
MAYNARD
#242 PARKER
Barn
Sub. by:
146
B. Butler
BOX 1734
Lunenburg 01462
Adams ST ACTON
48 paces
355° Field Bearing
To peak of House
WOOD FROG
Egg masses obs. 4/6/94
Adams St. POOL
A. mac. 4/21/94
A. mac. egg masses 4/21/94
To Maynard Sewage Treatment Plant
185° (Field), 122 paces

CDW CONSULTANTS, INC
Civil & Environmental Engineers
40 Speen Street, Suite 301
Framingham, MA 01701

Project #: 889.10
Prepared by: NICK FACENDOLA
Date: 3-22-05
Sheet: 1 of 2
Project Name: ACTON INSPECTION & SURVEY

	T@1	BS@2	
PT	HOR ANG	DIST	NOTES
2	00-00-00	188.23	PK NAIL SET
10	350-11-48	119.07	TEL. POLE # 3
11	84-19-15	145.49	UN-NAMED TEST PIT w/ CASING
12	140-54-15	130.73	WOOD STAKE FOUND
13	194-58-50	197.99	FIRE HYDRANT @INT OF PARKER ST & ADAMS ST.
14	206-35-12	90.55	TEL. POLE #2

	T@2	BS@1	
1	00-00-00	188.23	PK NAIL SET
15	177-37-23	79.60	TEL POLE # 4
16	185-37-30	69.64	CB 2
17	205-09-54	73.105	CB 1 (USED AS BM For ELEVATIONS)
3	194-51-21	158.14	PK NAIL SET

	T@3	BS@2	
2	00-00-00	158.13	PK NAIL SET
18	216-12-58	99.87	TEST PIT B-7
3	351-56-22	343.41	PK NAIL SET

CDW CONSULTANTS, INC
Civil & Environmental Engineers
40 Speen Street, Suite 301
Framingham, MA 01701

Project #: 889.10
Prepared by: NICK FACENDOLA
Date: 3-22-05
Sheet: 2 of 2
Project Name: ACTON INSPECTION & SURVEY

PT	BS	HI	FS	ELEV	NOTES
17	5.87	213.76	—	207.89	CB 2, RIM (BM)
18	—	—	4.25	209.51	Top of well, B-7
17	—	—	5.87	207.89	CB 2, Rim (BM)
17	6.09	213.98	—	207.89	CB 2, RIM (BM)
TP 1	2.32	211.99	4.31	2.09.67	Turning Point 1 on PAVEMENT
B-?			13.12	198.87	RIM of un-named Test Pit
VP			17.09	194.90	Vernal Pool WATER ELEV.
TP 2	3.83	213.57	2.25	209.74	Turning Point 2, on PAVEMENT
17			5.66	207.91	CB 2, RIM (BM)

B-7 → 9.10' to Bottom of well. well is either blocked or there IS NO WATER IN IT. EL of Bottom = 200.41'

B-? (un-named well) → 5.30' to WATER, EL of WATER = 193.57'

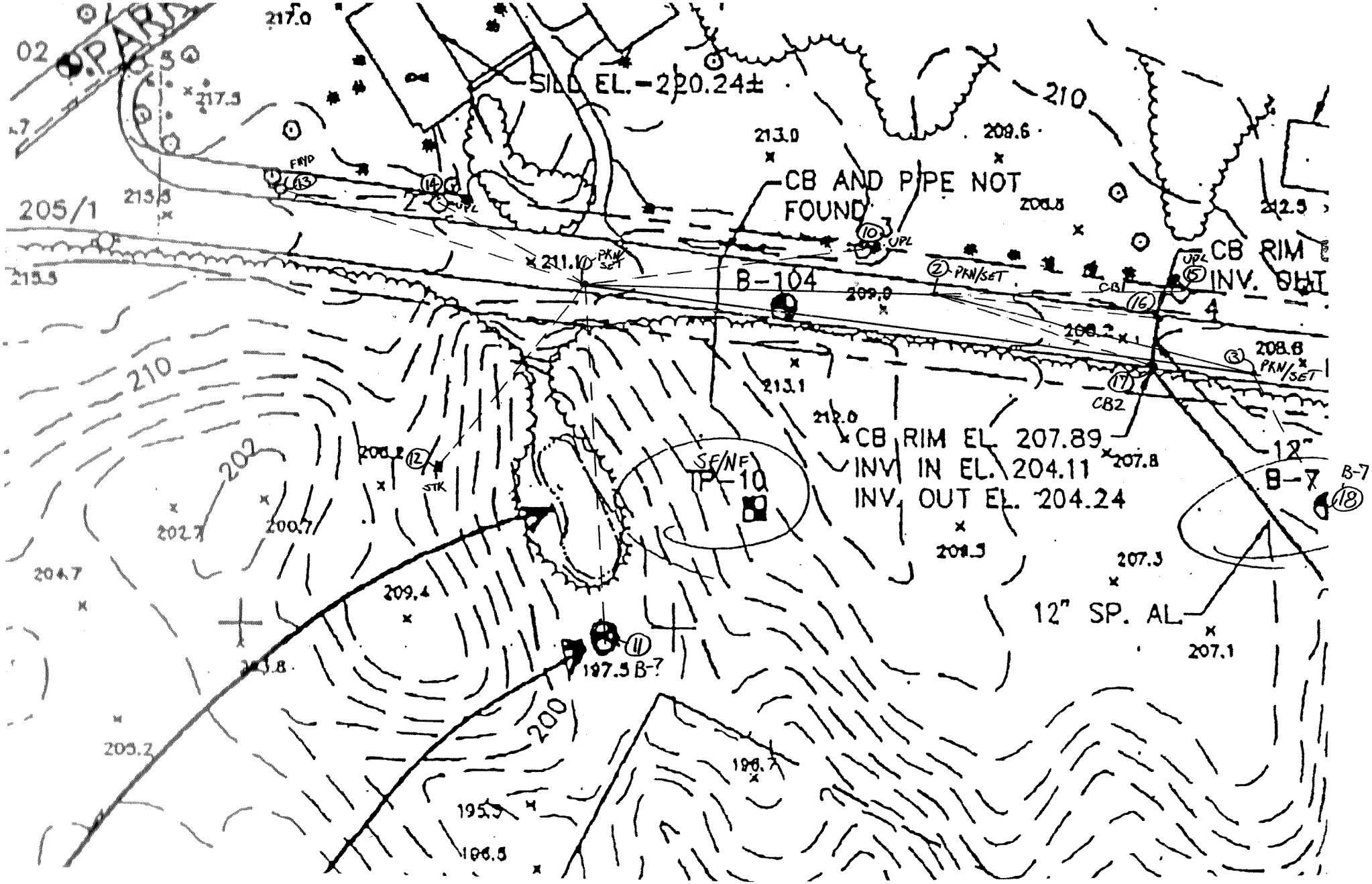

SILL EL.-220.24±
CB AND PIPE NOT FOUND
CB RIM EL. 207.89
INV. IN EL. 204.11
INV. OUT EL. 204.24
CB RIM
INV. OUT
12" SP. AL.
B-104
TP-10
B-7
205/1
210
202
200

APPENDIX E: HIGH STREET SUBSURFACE INFORMATION

F. G. SULLIVAN DRILLING CO., INC.
Lancaster, Mass. 01523

CUSTOMER	ACTON WATER DISTRICT	DATE	June 15, 2000
STREET	High Street TOWN Acton	STATE	Mass.
PROPERTY OWNER	Assabet Well Field		
LOCATION	Satalite --	WELL NO.	#2-A

SITE PLAN

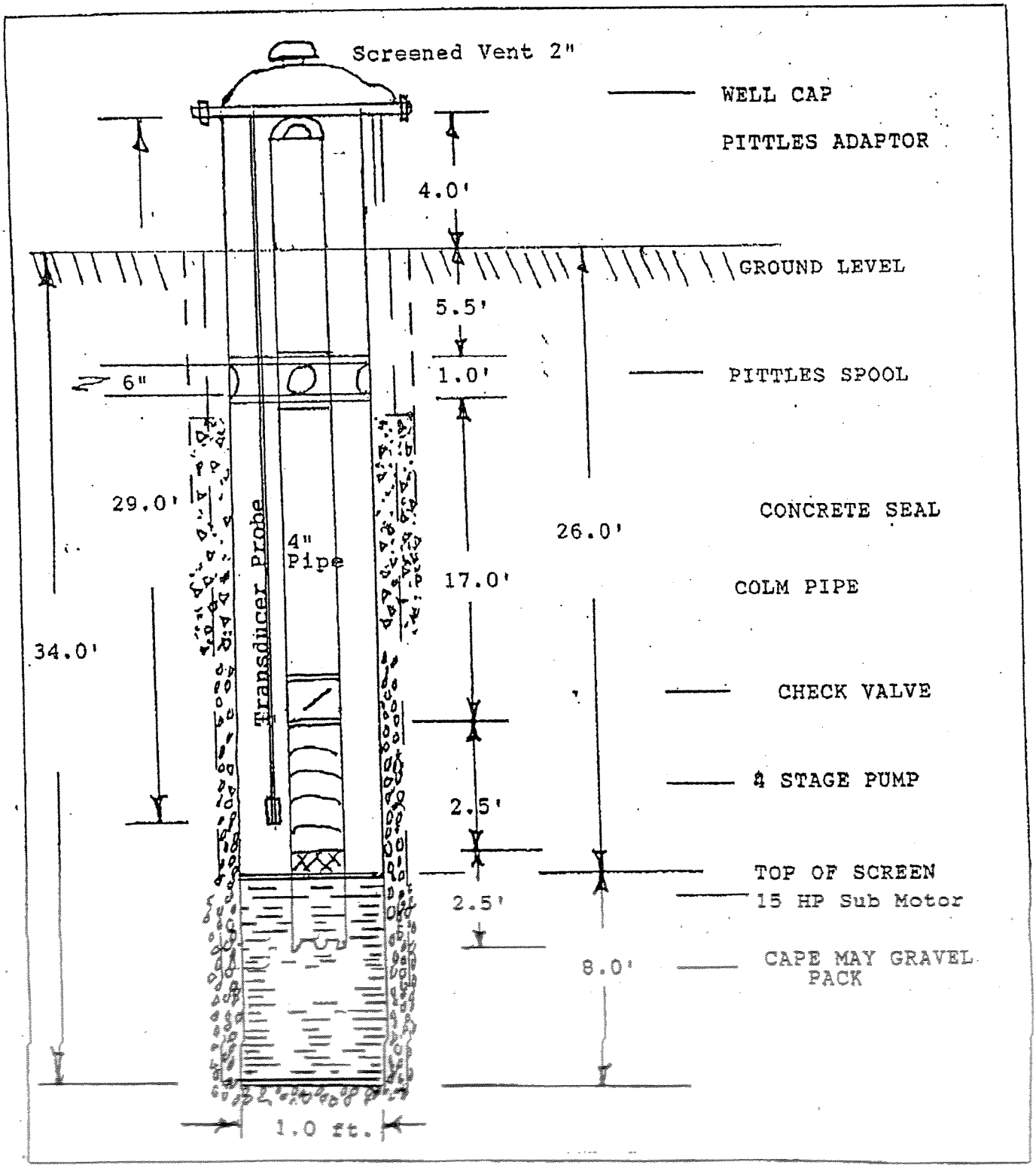

F. G. SULLIVAN DRILLING CO., INC.
Lancaster, Mass. 01523

Name of Driller STEVE SULLIVAN Names of Helpers WAYNE GARIEPY

Job: Name & Location ACTON MA ACTON WATER DISTRICT NEAR ASSABET #2 WELL

Date Started 3/8/00 Date Finished 4-17-00

Hole No. 12X18" G.P. WELL

Depth From	Depth To	Classification of Material	Feet of Screen Exposed
0	5	Br. COARSE SAND	8'
5'	16	Br. COARSE SAND	
		+ GRAVEL	Size of Screen & Slot
16	20	Br. COARSE SAND	180 SLOT
		+ GRAVEL + COBBLES	
20	25	Br. COARSE GRAVEL	Screen Type
		+ COBBLES	12" PIPE SIZE STAINLESS STEEL
25	30	Br. COARSE	Pipe Left In
		GRAVEL + COBBLES	27' OF 12"
30	34	Br. COARSE SAND	Pipe Above Ground
		+ GRAVEL + COBBLES.	1.00
34		Bedrock.	
			Static From Top of Pipe
			9.25
			4-17-00
			G.P.M.
			393 G.P.M
			Samples Taken

SITE PLAN

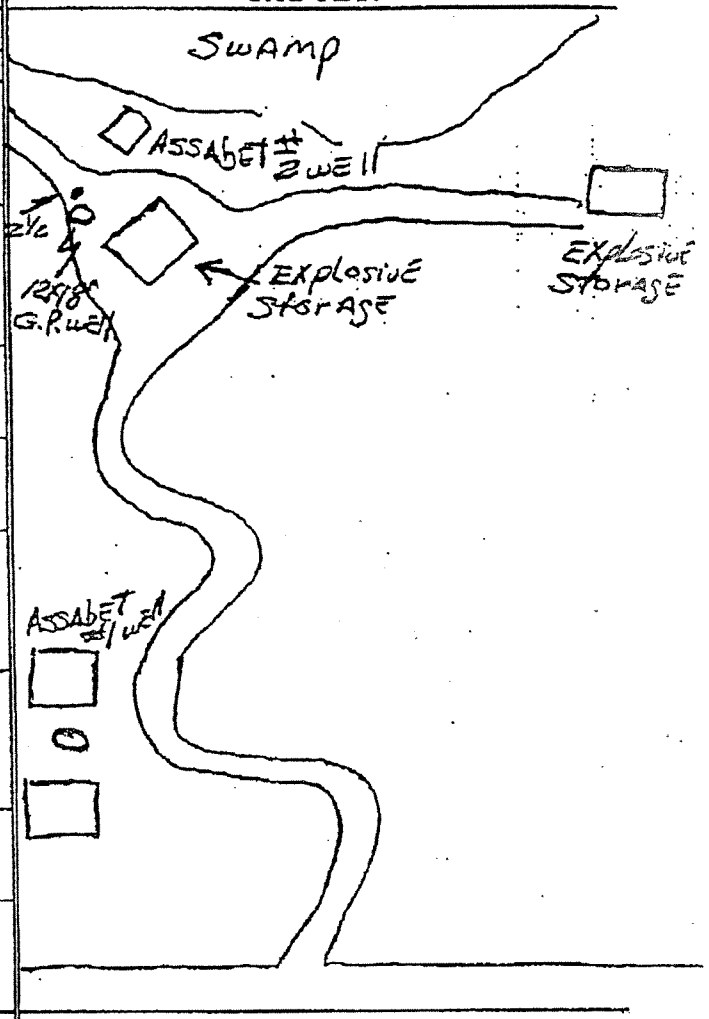

Pump Test on Hole No.

Date	Time	Dr. Down	G.P.M.	Static and Other Info.
4-13-00	STATIC		WELL 2-A	obs.
			9.55	8.20
START	WELL	pumping 205 G.P.M with		
DRAW DOWN TO 25.00 IN WELL 2-A AND				
10.80 IN obs.			(13 G.P.F)	
AFTER pumping AND surging FOR 8 hrs				
WELL pumping 361 G.P.M with draw				
DOWN TO 18.90 IN WELL 2-A And				
12.60 IN obs			(38.4 G.P.F)	
4-17-00		WELL 2-A		obs.
STATICS		9.25		7.95
AFTER pumping And surging For 8 hrs				
WELL pumping 393 G.P.M with draw down TO 17.95 IN WELL 2-A AND 13.55 IN obs				

(GENERAL CAPACITY 256 G.P.F)

REMARKS

DEPTH BELOW GROUND 34 FT

#5 GRAVEL PACK 16'-34'

#1 SAND 15'-16'

CONCRETE SEAL 5'-15'

ALL 18"-24" REMOVED

TOTAL 16 hrs DEVELOPING

F. G. SULLIVAN DRILLING CO., INC.
Lancaster, Mass. 01523

PUMP TEST LOG

CUSTOMER ACTON MA. WATER DISTRICT | DATE 5-3-00

STREET | TOWN ACTON | STATE MA.

PROPERTY OWNER ACTON WATER DIST.

LOCATION ASSABET WELL FIELD | WELL NO. ASSBT 2-A

SITE PLAN

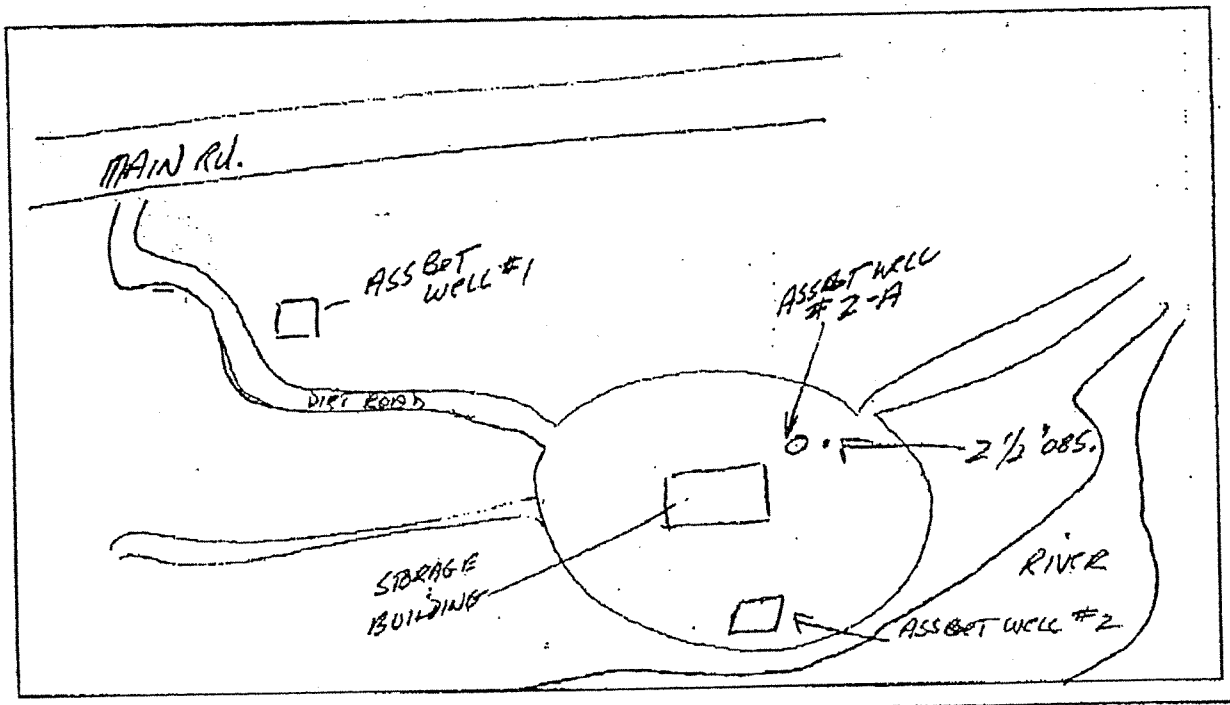

TYPE OF PUMP 5" TURBINE | DEPTH SET 23' 6" | LENGTH OF AIR LINE

LENGTH AND SIZE OF DISCHARGE LINE 100' X 6" | ORFICE 6"X4"

				WELL	OBS	~~OBS~~ WELL	OBS	OBS	OBS	OBS
WELL NO.				No. 2-A	No. 2" OBS	No. 2	No.	No.	No.	No.
PIPE ABOVE GROUND				1.0	—					
STATIC WATER LEVEL				9.90	8.35	8.27				
WEATHER and DATE	ORFICE TIME	INCHES	G.P.M.							
5/3/00	1 min				11.33					
CLEAR	2				12.73					
	3	40"	401	17.73	13.02					
	4			17.86	13.12					
	5			17.95	13.19					
	6			18.06	13.38					
	7			18.16	13.44					
	8			18.23	13.45	9.47				
	9			18.30	13.48					
	10	40"	401	18.34	13.50	9.50				

F.G. SULLIVAN DRILLING CO., INC.

408 Parker Road
Lancaster, MA 01523
Tel. (978) 365-2932

CUSTOMER ACTON WATER DISTRICT

	WELL	OBS	OBS	OBS	OBS	OBS	OBS
WELL NO.	No. 2-A	No. OBS	No. WELL 2	No.	No.	No.	No.
PIPE ABOVE GROUND	1.0	—					
STATIC WATER LEVEL	9.90						

WEATHER and DATE	ORFICE TIME	INCHES	G.P.M.							
5-3-00	20 min	40	401	18.49	13.77	19.67				
	30	40	401	18.73	14.02	9.88				
	40	40	401	18.89	14.12	9.99				
	50	40	401	19.02	14.27	10.10				
	60	40	401	19.15	14.37	10.20				
	70	40	401	19.23	14.46	10.24				
	80	40	401	19.31	14.54	10.31				
	90	40	401	19.40	14.64	10.39				
	100	40	401	19.43	14.67	10.42				
	110	40	401	19.50	14.71	10.48				
	120	40	401	19.58	14.80	10.53				
	2:00PM	40	401	19.85	15.10	10.82				
Sunny outside Temp: 85°	3:30PM	40	401	20.13	15.32	11.04				
	5 PM	40	401	20.27	15.49	11.20				
	6:30 PM	40	401	20.44	15.63	11.31				
	8 PM	40	401	20.52	15.90	11.43				
	9:30PM	40	401	20.61	15.93	11.52				
	11 PM	40	401	20.69	15.94	11.60				
5-4-00	12:30AM	40	401	20.79	16.05	11.67				
	2 AM	40	401	20.87	16.16	11.74				
	3:30 AM	40	401	20.95	16.26	11.81				
	5 AM	40	401	21.04	16.32	11.87				
	6:30 AM	40	401	21.14	16.36	11.88				
	8 AM	40	401	21.24	16.42	11.90				
	9:30 AM	40	401	21.34	16.50	11.98				
	10 AM	40	401	21.31	16.50	11.97				
	2 PM	40	401	21.40	16.55	12.16				
	6 PM	40	401	21.45	16.60	12.16				
CLOUDY	10 PM	40	401	21.51	16.64	12.21				
5-5-00	2 AM	40	401	21.58	16.72	12.27				
TRACE RAIN	6 AM	40	401	21.62	16.78	12.31				
	10 AM	40	401	21.70	16.84	12.35				

F.G. SULLIVAN DRILLING CO., INC.

408 Parker Road
Lancaster, MA 01523
Tel. (978) 365-2932

CUSTOMER ACTON WATER DISTRICT PAGE 3

	WELL	OBS	~~OBS~~ WELL	OBS	OBS	OBS	OBS
WELL NO.	No. 2-A	No. 2 OBS	No. 2	No.	No.	No.	No.
PIPE ABOVE GROUND	1.0						
STATIC WATER LEVEL	9.90	8.35	8.27				

WEATHER and DATE	ORFICE TIME	INCHES	G.P.M.							
5-5-00	10:30AM	OFF	OFF	–	–	–				
PTY CLOUDY	1MIN			15.10	13.43					
	2			15.01	13.36					
	3			14.87	13.23					
	4			14.78	13.14					
	5			14.69	13.04					
	6			14.58	12.95					
	7			14.52	12.87					
	8			14.44	12.80					
	9			14.39	12.74					
	10			14.31	12.67					
	20			13.82	12.20					
	30			13.50	11.86	11.05				
	40			13.28	11.66	10.95				
	50			13.09	11.50	10.82				
	60			12.93	11.32	10.73				
	70			12.82	11.20	10.64				
	80			12.72	11.11	10.56				
	90			12.56	10.98	10.45				
	100			12.49	10.89	10.38				
	110			12.43	10.84	10.35				
	120			12.39	10.78	10.31				
	2PM			12.05	10.47	10.10				
	3:30PM			11.93	10.35	9.95				

Microbac

® Microbac Laboratories, Inc.
MASSACHUSETTS DIVISION
63 PLAIN STREET
CLINTON, MA 01510
(978) 368-7604

http://www.microbac.com

CHEMISTRY • MICROBIOLOGY • FOOD SAFETY • CONSUMER PRODUCTS
WATER • AIR • WASTES • FOOD • PHARMACEUTICALS • NUTRACEUTICALS

CERTIFICATE OF ANALYSIS

F.G. SULLIVAN DRILLING CO.
408 PARKER ROAD
LANCASTER, MA 01523

Date Reported: 5/24/00
Sample ID: 9917-00206
Date Received: 5/05/00
Sampled by: CUSTOMER

PARAMETERS	RESULTS	DATE	TECH	METHOD
WATER - ACTON WATER DIST. ACTON MA ASSABET WELL NO 2-A 5/5/00				
Total Coliform	ABSENT /100ml	5/05/00	LC	SM 9222B
SECONDARY CONTAMINANTS				EPA APPROVED
Turbidity	0.3 NTU	5/08/00	LC	2130B
Total Dissolved Solids	163 mg/l	5/08/00	LC	2540C
True Color	0 Pt-Co	5/05/00	MAO	EPA
Odor	0 T.O.N.	5/05/00	MAO	EPA
pH	6.66 S.U.	5/05/00	MAO	4500HB
Alkalinity as CaCO3	18.4 mg CaCO3/l	5/10/00	KT	2320B
Hardness	28.3 mg/l	5/11/00	LA	2340B
Calcium	11.3 mg/l	5/11/00	LA	3111B
Magnesium	3.9 mg/l	5/11/00	LA	3111B
Aluminum	<0.007 mg/l	5/23/00	LA	3113B
Potassium	3.4 mg/l	5/11/00	LA	258.1
Iron	<0.03 mg/l	5/11/00	LA	3111B
Manganese	<0.02 mg/l	5/11/00	LA	3111B
Sulfate	13.2 mg/l	5/08/00	LC	4500-SO4 D.
Chloride	37.8 mg/l	5/09/00	LA	4500-CL-B
Silver	<0.03 mg/l	5/11/00	LA	3111B
Copper	<0.01 mg/l	5/11/00	LA	3111B
Zinc	<0.03 mg/l	5/11/00	LA	3111B

Respectfully Submitted by: _____

The data and other information contained on this, and other accompanying documents, represent only the sample(s) analyzed and is rendered upon the condition that it is not to be reproduced wholly or in part for advertising or other purposes without written approval from the laboratory.

MEMBER

F.G. SULLIVAN DRILLING CO., INC.
Test Boring and Gravel Wells
Parker Road
Lancaster, Massachusetts 01523

(COARSE)

Sample sent in by 60-L Drill

Town ACTON WATER DIST. State MA Zip _____ Date 3/16/00

From well of Assabet Well No.2A

Remarks: 18 in. by 12 in. Gravel Packed Well
From 20 ft. to 25 ft.

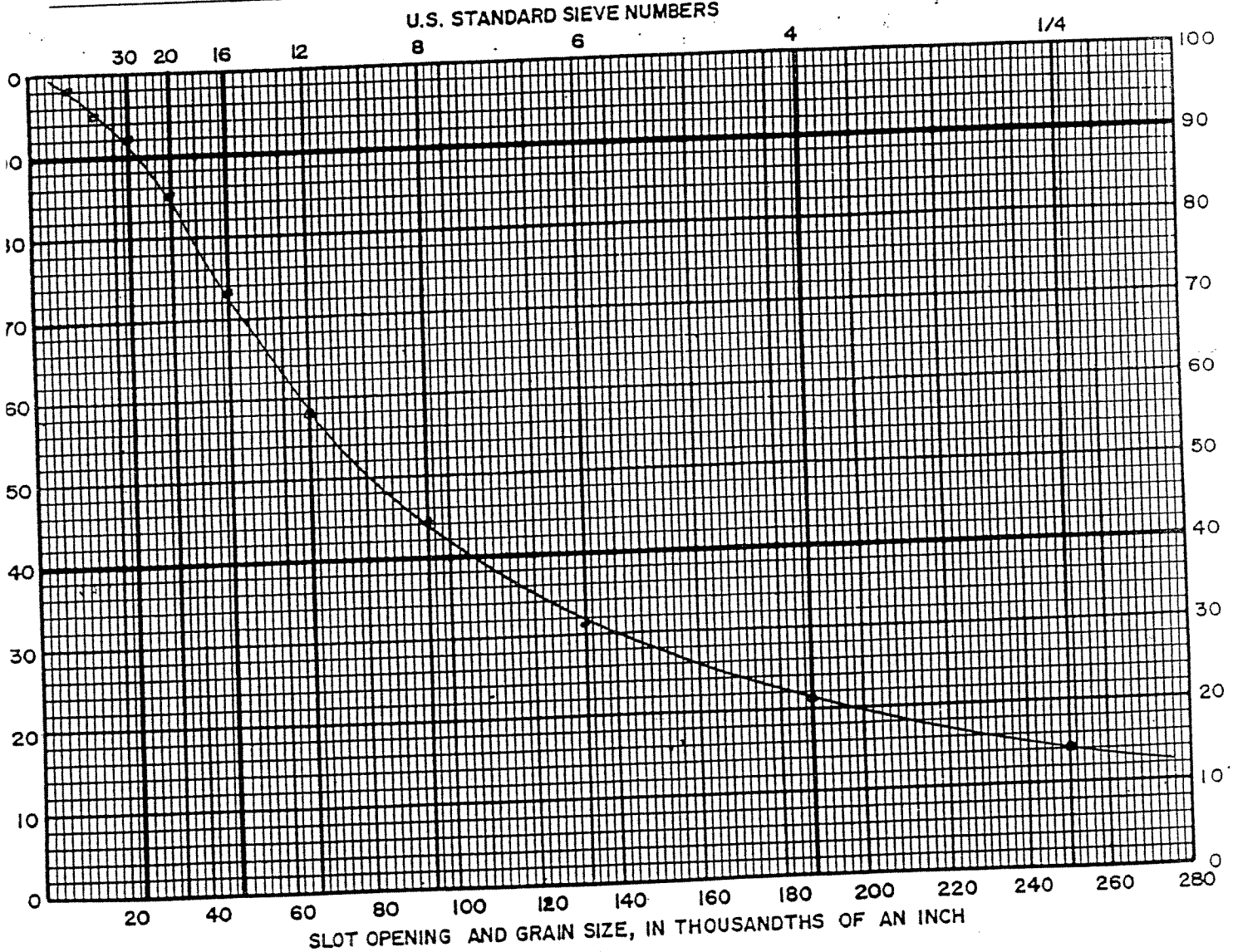

U.S. SIEVE NO.	SIEVE OPENING INCHES	SIEVE OPENING MM.	CUMULATIVE % RETAINED		
¼	.250	6.35	14		
4	.187	4.76	21		
6	.132	3.36	31		
8	.094	2.38	44		
12	.066	1.68	58		
16	.047	1.19	73		
20	.033	0.84	85		
30	.023	0.60	92		
	.016		95		
	.008		98		
	.004		99		
	0		100		

Notes:

Recommended Slot Opening:

Recommended Screen: Dia. _____ in. Length _____ Ft.

By: F.G.S.

... SLOT SIZES FURNISHED OR RECOMMENDED

F.G. SULLIVAN DRILLING CO., INC.
Test Boring and Gravel Wells
Parker Road
Lancaster, Massachusetts 01523

(COARSE)

Sample sent in by 60-L Drill

Town ACTON WATER DIST. State MA Zip _____ Date 3/16/00

From well of Assabet Well No.2A

Remarks: 18 in. by 12 in. Gravel Packed Well

From 25 ft to 30 ft

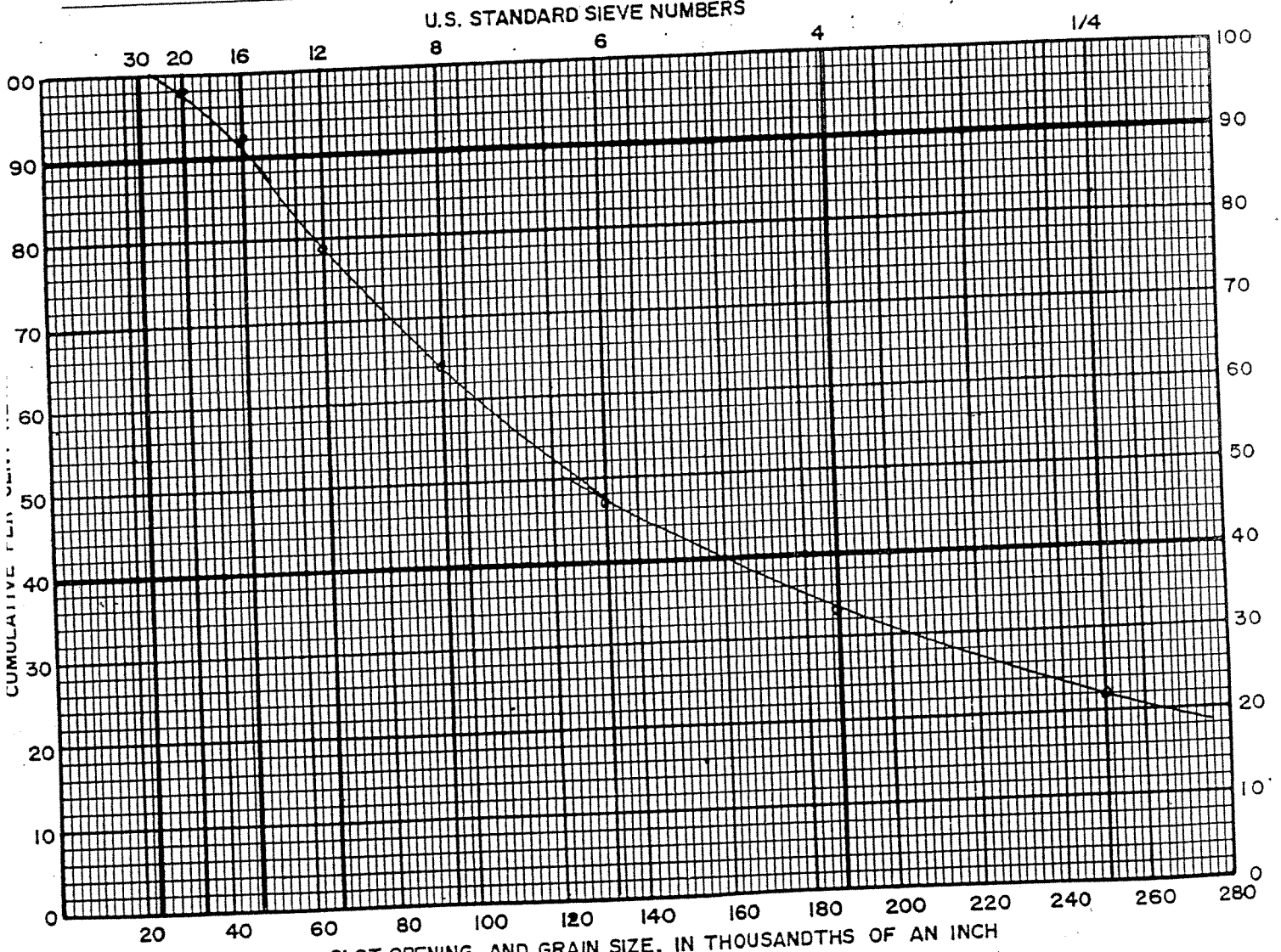

U.S. SIEVE NO.	SIEVE OPENING INCHES	SIEVE OPENING MM.	CUMULATIVE % RETAINED
¼	.250	6.35	22
4	.187	4.76	33
6	.132	3.36	47
8	.094	2.38	64
12	.066	1.68	79
16	.047	1.19	92
20	.033	0.84	98
30	.023	0.60	99
	016		100

Notes: #5 Cape May Gravel Pack

Recommended Slot Opening: 180 Slot

Recommended Screen: Dia. 12 in. Length 4 Ft.

By: [illegible]

...THAT WHILE WE BELIEVE SLOT SIZES FURNISHED OR RECOMMENDED

F.G. SULLIVAN DRILLING CO., INC.
Test Boring and Gravel Wells
Parker Road
Lancaster, Massachusetts 01523

SAND ANALYSIS
(COARSE)

Sample sent in by 60-L Drill

Town ACTON WATER DIST. State MA Zip _____ Date 3/16/00

From well of Assabet Well No.2A

Remarks: 18 in. by 12 in. Gravel Packed Well
From 30 ft. to 34 ft.

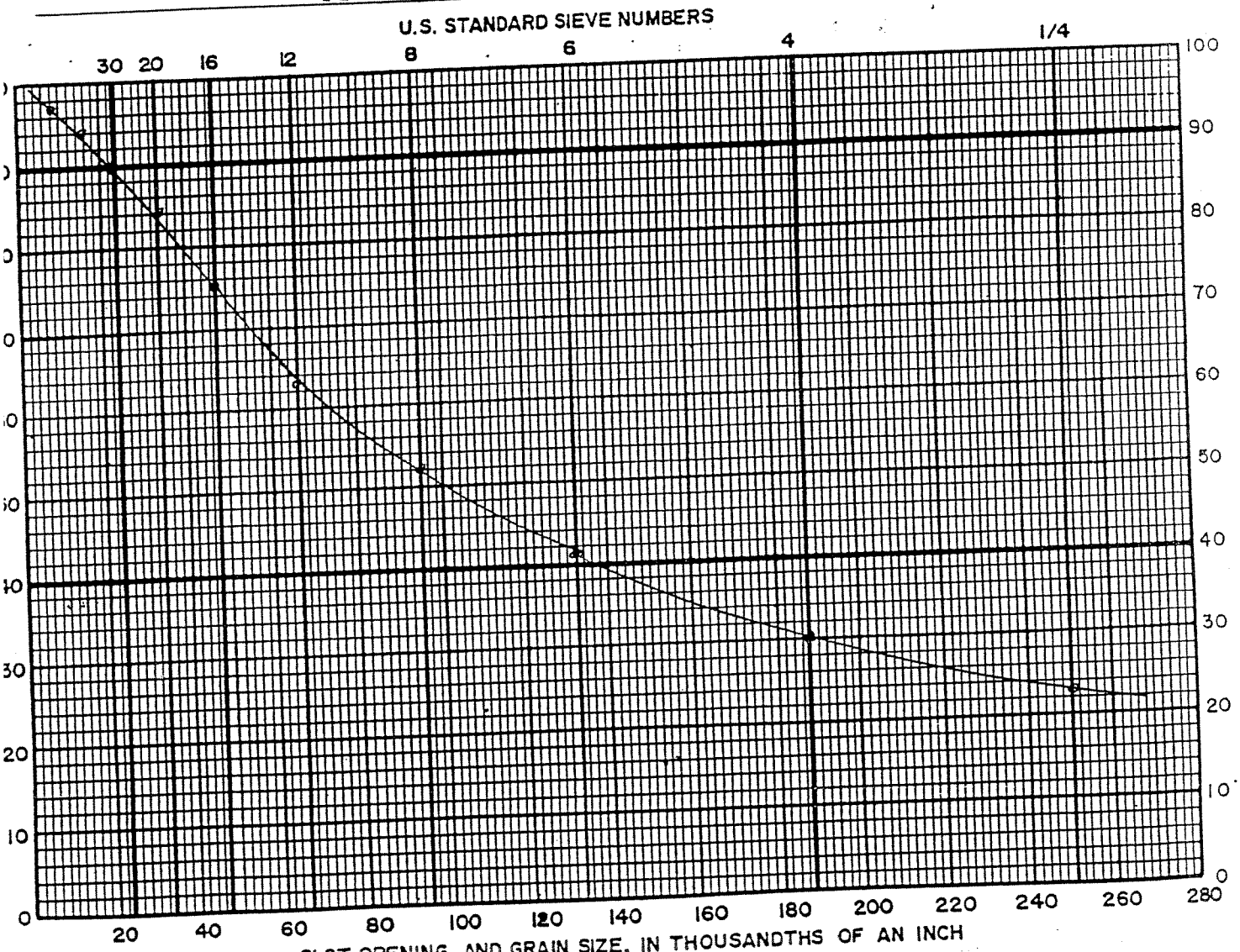

U.S. SIEVE NO.	SIEVE OPENING INCHES	SIEVE OPENING MM.	CUMULATIVE % RETAINED		
¼	.250	6.35	23		
4	.187	4.76	30		
6	.132	3.36	41		
8	.094	2.38	52		
12	.066	1.68	63		
16	.047	1.19	75		
20	.033	0.84	84		
30	.023	0.60	90		
	.016		94		
	.008		97		
	.004		99		
	0		100		

Notes: #5 Cape May Gravel Pack

Recommended Slot Opening: 180 Slot

Recommended Screen: Dia. 12 in. Length 4 Ft.

By: F.G.S.

SLOT SIZES FURNISHED OR RECOMMENDED

P.G. SULLIVAN DRILLING CO., INC.
Test Boring and Gravel Wells
Parker Road
Lancaster, Massachusetts 01523

(COARSE)

Sample sent in by _____

Town _____ State _____ Zip _____ Date _____

From well of _____

Remarks: #5 - CAPE MAY WELL GRAVEL

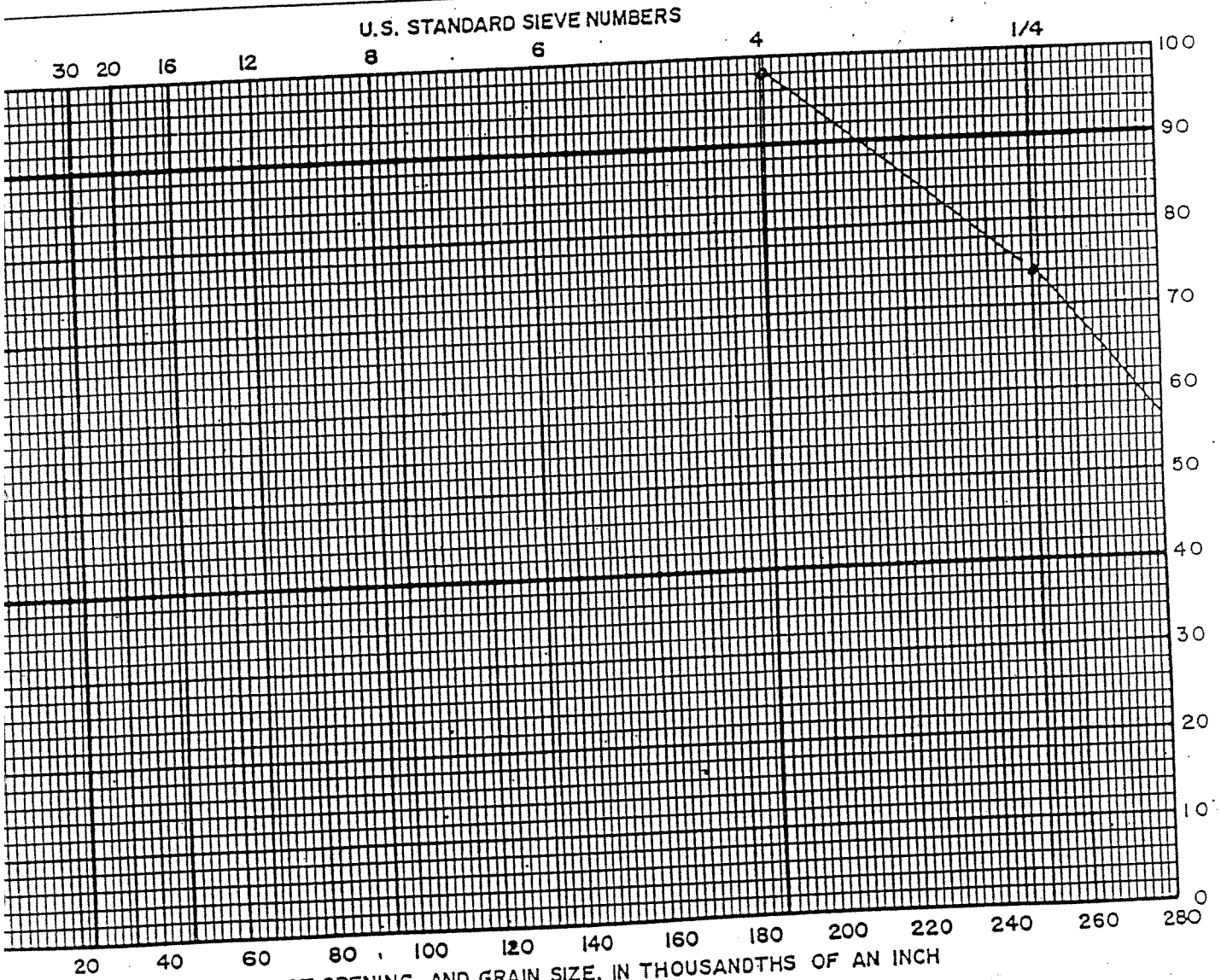

U.S. SIEVE NO.	SIEVE OPENING INCHES	SIEVE OPENING MM.	CUMULATIVE % RETAINED .4	.375	
¼	.250	6.35	74		
4	.187	4.76	98.		
6	.132	3.36			
8	.094	2.38			
12	.066	1.68			
16	.047	1.19			
20	.033	0.84			
30	.023	0.60			

Notes: _____

Recommended Slot Opening: _____

Recommended Screen: Dia. _____ In. Length _____ Ft.

By: _____

SLOT SIZES FURNISHED OR RECOMMENDED

May 10, 2004

Mr. Gene Brunelle
Department of Environmental Protection
627 Main Street
Worcester, MA 01608

Re: Assabet No.1 Replacement Well Pumping Test
Acton Water District

Dear Mr. Brunelle:

This letter shall serve as the *Pumping Test Report* for the Assabet No.1 replacement well. The purpose of this pumping test was to verify the yield of the replacement well and its water quality.

Background

Yield of the original Assabet well No.1 had been deteriorating for many years. On November 24, 2003 BRP WS 17 and 18 application forms and transmittals (W045914 & W045915) were submitted to the Department to site a replacement well. The site exam application included an air photo which showed the Zone I radius of the Assabet No.1 replacement well. There are no non-conforming land uses.

An 18 x 24 inch replacement well was constructed in December 2003. The well is 61 feet deep with 10 feet of screen. Static water level is about 15 feet. A well log and construction diagram are attached.

Pumping Test

A performance pumping began on February 17, 2004 at a rate of 171 GPM. After 90 minutes of pumping the rate was increased to 380 GPM. After another 90 minutes the rate was increased to 505 GPM. Pumping continued at that rate until February 19 for a total of 48 hours. Total drawdown in the pumping well was 13.98 feet. The discharge line was run from the well about 400 feet to the Assabet River. The pumping rate was measured with a calibrated orifice. Pumping test logs are attached.

Water Quality Testing

At the end of the test samples were collected for analysis of DEP Secondary Contaminants and Total Coliform. Generally water quality is good although the secondary parameter for manganese exceeded recommended concentration. All laboratory testing results are attached.

If you have any questions regarding this submittal, or require any additional information, please do not hesitate to call me.

Sincerely,
DUFRESNE-HENRY, INC.

David G. Harwood, CPG
Project Manager

Cc: Jim Deming, District Manager

R. E. CHAPMAN CO.
OAKDALE, MASS.

of Driller Kevin Kirby Names of Helpers Rich Fyrberg

lame & Location Acton Water District - Assebet #1 TW Site #1-03

Started 12/10/03 Date Finished 12/17/03

No.

To	Classification of Material
1	Topsoil
17	Fine-coarse sand with fine-medium gravel
18	Boulder
36	Fine-coarse sand with fine-medium gravel
37	Boulder
41	Fine-coarse sand with fine-medium gravel
50	Fine-coarse sand with fine-medium gravel and cobbles
54	Medium-coarse sand with medium-coarse gravel and cobbles
61	Medium-coarse sand with medium-coarse gravel and cobbles

Feet of Screen Exposed

Size of Screen & Slot

Screen Left in

Screen Pulled Out

Pipe Left in
66'4" of 24"

Pipe Pulled Out

Remarks

Pump Test on Hole No.

Time	Dr. Down	G. P. M.	Static and Other Info.

Date Started Date Finished

Hole No.

Depth From	Depth To	Classification of Material

Feet of Screen Exposed

Size of Screen & Slot

Screen Left in

Screen Pulled Out

Pipe Left in

Pipe Pulled Out

Remarks

Pump Test on Hole No.

Date	Time	Dr. Down	G. P. M.	Static and Other Info.

CONSTRUCTION RECORD

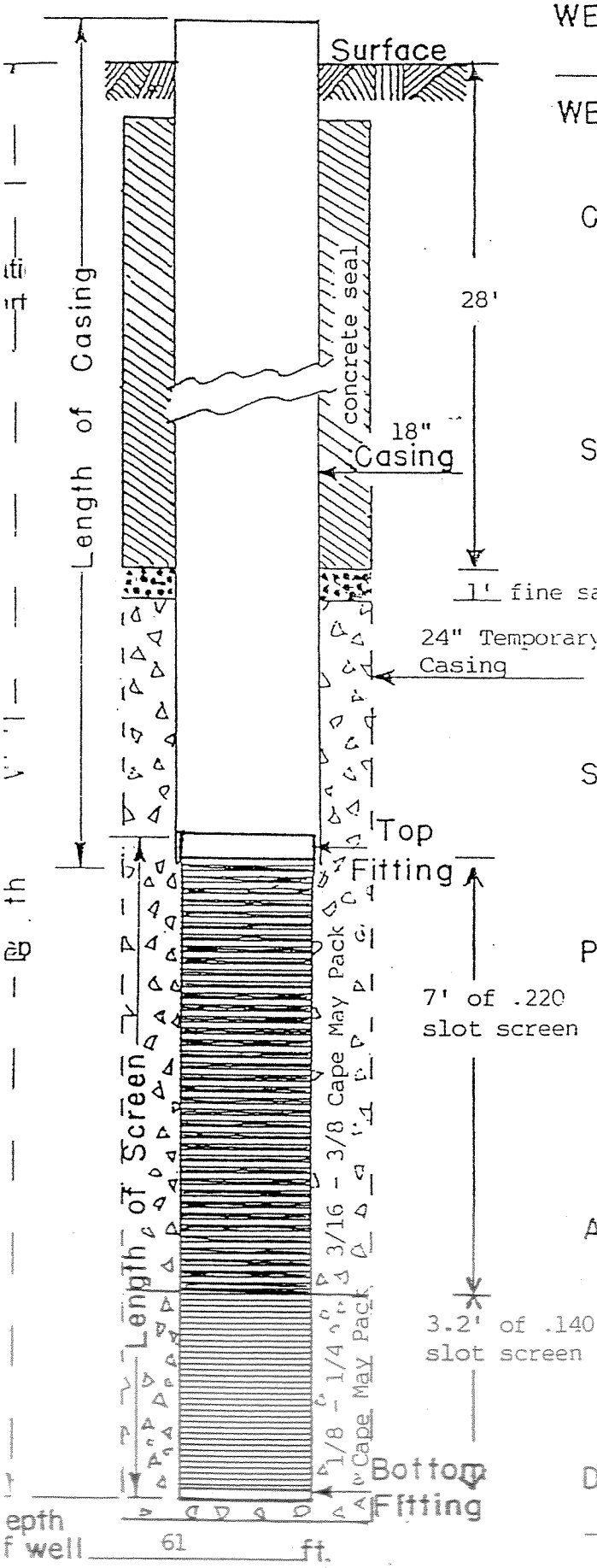

WELL OWNER Acton Water District

Massachusetts Avenue, Acton, Mass.

WELL NO. Assabet #1 Replacement Well

Date February 20, 2004

CASING DETAILS

Length 61.5' 50.8' est ft.

Diameter 24" temp. 18" in.

Kind 3/8 steel 3/8 steel (pulled out)

SCREEN DETAILS

Make Johnson

Length 10.2 ft.

Diameter 18" pipe size in.

Slot size 7' of 220, 3.2' of 140

Metal Stainless steel

SCREEN FITTINGS

Top Welded

Bottom Welded

PUMP TEST

Static level 14.92 ft.

Rate 505 g.p.m.

Draw down 13.98 ft.

Hours pumped 48 hrs.

ARTIFICIALLY GRAVEL TREATED

Yes X No

Thickness 24" x 18" in.

Size of gravel 1/8 to 1/4, 3/16

DRILLER Stephen Turner

Microbac

MASSACHUSETTS DIVISION
120 Bartlett Street
Marlborough, MA 01752
(508) 460-7600 Fax (508) 460-7777
Daniel J. Ste.Marie, Lab Director
www.microbac.com E-Mail: massachusetts@microbac.com

STATE CERT ID.
M-MA003

CHEMISTRY · MICROBIOLOGY · FOOD SAFETY · CONSUMER PRODUCTS
WATER · AIR · WASTES · FOOD · PHARMACEUTICALS · NUTRACEUTICALS

CERTIFICATE OF ANALYSIS

R.E. Chapman
30 North Main Street
West Boylston,MA 01583

Date Reported	3/3/2004
Date Received	2/19/2004
Sample ID	0402-00671
Invoice No.	75492
Cust #	C036
Cust P.O. #	

ubject WATER SAMPLES RECD 2/19/04

ampled By: CLIENT Date 2/19/2004 Time

st	Result	Date	Time	Tech	Method
ASSABET #1 2/19/04 900AM .....continued					
Color	0 Pt-Co	2/19/2004	12:45	KJR	SM 2120B
r	1 T.O.N.	2/19/2004	13:00	KJR	EPA
	6.1 S.U.	2/19/2004	17:30	KJR	SM-4500-H-B
linity as CaCO3	31 mg CaCO3/L	2/19/2004		HCL	SM 2320B
dness	71 mg/L	2/23/2004		DLK	EPA 200.7
ium	20 mg/L	2/23/2004		DLK	EPA 200.7
nesium	5.0 mg/L	2/23/2004		DLK	EPA 200.7
ninum	<0.010 mg/L	2/23/2004		DLK	EPA 200.7
ssium	3.2 mg/L	2/23/2004		DLK	EPA 200.7
	<0.01 mg/L	2/23/2004		DLK	EPA 200.7
nganese	0.11 mg/L	2/23/2004		DLK	EPA 200.7
ate	21 mg/L	3/1/2004		KJR	4500-SO4-D
oride	54 mg/L	3/1/2004		KJR	4500-CL-B
er	<0.003 mg/L	2/23/2004		DLK	EPA 200.7
per	0.002 mg/L	2/26/2004		DLK	EPA 200.7
	<0.003 mg/L	2/23/2004		DLK	EPA 200.7
ate Nitrogen as N	0.67 mg/L	2/19/2004	17:45	KJR	4500-NO3-D
ite Nitrogen as N	<0.01 mg/L	2/19/2004	15:15	KJR	4500-NO2-B
lium	26 mg/L	2/23/2004		DLK	EPA 200.7
al Coliform	0 per 100ml	2/19/2004	16:00	LBC	SM 9222

The data and information on this, and other accompanying documents, represent only the sample(s) analyzed and is rendered upon condition that it is not to be reproduced wholly or in part for advertising or other purposes without approval from the laboratory.
USDA-EPA-NIOSH Testing Food Sanitation Consulting Chemical and Microbiological Analyses and Research

MEMBER