PLACES Site Consultants, Inc.

PLANNING, LANDSCAPE ARCHITECTURE, CIVIL ENGINEERING & SURVEYING

RECEIVED
AUG - 4 2006
TOWN OF ACTON
PLANNING DEPARTMENT

August 3, 2006

Acton Planning Board
Town Hall
472 Main Street
Acton, MA 01720

Re: Senior Residence Special Permit
Plan Revisions
Woodlands at Laurel Hill- Lot 4
Project No. 349

Dear Board Members:

Please find enclosed the revised plans for the Senior Residence Special Permit for the Woodlands at Laurel Hill. We have included 5 full size sets and 12 11"x17" sets for distribution to Board members and Town departments. The revisions address the various review comments and discussions at the Planning Board hearing.

These plan revisions include the addition of a traffic calming speed bump, similar to the one installed by the town on Windsor Ave. This speed bump will have a total width of 14' and will be located just before entering the intersection of the Senior Residence and the Recycling area. This speed bump is shown on the Site Plan sheet S-1 and the Detail Sheet D-5 (Bituminous Concrete Speed Bump). At the Board's request, internal paths have been added to the center area connecting three paths from the mail stations to a central garden area. These features are shown on the Landscape Plan Sheet L-1.

Please contact this office should you need any additional copies.
Thank you.

Very truly yours,
PLACES Site Consultants, Inc.
By:

Susan C. Sullivan, P.E.
Project Engineer

Cc: Omni Development

694 Main Street, Suite 3, Holden, MA 01520
(508) 829-0333 FAX (508) 829-0904 E-Mail: places@verizon.net

LOCUS MAP
SCALE: 1"=1,200'

RECEIVED
AUG - 4 2006
TOWN OF ACTON
PLANNING DEPARTMENT

June 9, 2006

The Woodlands at Laurel Hill
Lot 4 Senior Residence Development

APPLICANT:

WOODLANDS AT LAUREL HILL, LLC
676 ELM STREET, SUITE 300
CONCORD, MA 01801
PH: (978) 369-4884
FAX: (978) 369-4983

CIVIL ENGINEER/LAND PLANNERS:

PLACES SITE CONSULTANTS, INC.
694 MAIN STREET, SUITE 3
HOLDEN, MA 01520-1862
PH: (508) 829-0333
FAX: (508) 829-0904

LANDSCAPE ARCHITECT:

HAWK DESIGN, INC.
277 MAIN STREET
CHARLESTON, MA 02129
PH: (617) 242-8300
FAX: (617) 242-5018

LAND SURVEYOR:

STAMSKI AND MCNARY, INC.
80 HARRIS STREET
ACTON, MA 01720
PH: (978) 263-8585
FAX: (978) 263-9883

WETLANDS/BIOLOGY CONSULTANT:

OXBOW ASSOCIATES, INC.
409 MASS AVENUE, SUITE 201
P.O. BOX 971
ACTON, MA 01720-0971
PH: (978) 929-9058
FAX: (978) 635-1892

SANITARY ENGINEER:

TIGHE & BOND, INC.
324 GROVE STREET
WORCESTER, MA 01605
PH: (508) 471-9605
FAX: (508) 795-1087

SITE MAP
SCALE: 1"=400'

PLAN INDEX

NOTE-1	GENERAL NOTES, LEGEND & ABBREVIATIONS
M-1	MASTER PLAN
E-1	AFFECTED PARCELS & RECORD OWNERS
EC-1	EXISTING CONDITIONS & DEMOLITION PLAN
SWP-1	STORMWATER POLLUTION PREVENTION PLAN
S-1 to S-2	SITE PLANS
GD-1 to GD-2	GRADING & DRAINAGE PLANS
PP-1 to PP-2	ROADWAY PLAN & PROFILE
U-1 to U-2	UTILITY PLAN
D-1 to D-6	CONSTRUCTION DETAILS & EROSION & SEDIMENTATION CONTROL NARRATIVE PLAN
L-1 to L-2	LANDSCAPE PLANS
A-1 to A-2	ARCHITECTURAL FLOOR PLANS & ELEVATIONS

The Woodlands at Laurel Hill
Lot 4 Senior Residence Development

REVISION PER REVIEW COMMENTS
8-2-06

GENERAL NOTES:

1. PRIOR TO THE PREPARATION OF BIDS AND/OR THE INITIATION OF CONSTRUCTION, THE CONTRACTOR SHALL OBTAIN AND CAREFULLY EXAMINE THIS PLAN SET, RELATED CONSTRUCTION PLAN SETS FROM OTHER PROFESSIONAL DISCIPLINES, CONSTRUCTION SPECIFICATIONS, MANUFACTURERS INFORMATION AND ANY APPLICABLE PERMIT REQUIREMENTS/CONDITIONS OF APPROVAL FOR THE PROJECT.

2. THE EXISTING UTILITIES SHOWN ON THESE PLANS ARE APPROXIMATE ONLY. DIG SAFE AND THE APPROPRIATE UTILITY COMPANIES SHALL BE CONTACTED BY THE CONTRACTOR PRIOR TO THE INITIATION OF CONSTRUCTION.

3. NOT ALL UTILITIES WERE ABLE TO BE LOCATED BY RECORD INFORMATION, SITE SURVEYS OR UTILITY LOCATOR SERVICES. THE DESIGN ENGINEER AND BASE PLAN SURVEYOR DO NOT ACCEPT ANY RESPONSIBILITY FOR DAMAGES INCURRED AS A RESULT OF UTILITIES OR SUBSURFACE STRUCTURES WHICH ARE OMITTED OR INACCURATELY SHOWN. PRIOR TO THE INITIATION OF WORK, THE CONTRACTOR SHALL VERIFY THE LOCATION/ELEVATION OF EXISTING UTILITIES SHOWN ON THE PLAN.

4. THE ENGINEER SHALL BE NOTIFIED IMMEDIATELY UPON THE DISCOVERY OF ANY DISCREPANCY BETWEEN THE LOCATION/ELEVATION OF ANY EXISTING UTILITIES SHOWN ON THE PLANS AND THAT WHICH IS FOUND IN THE FIELD.

5. THE CONTRACTOR SHALL RETAIN THE SERVICES OF A REGISTERED PROFESSIONAL LAND SURVEYOR TO PROVIDE LAYOUT & CONTROL FOR THE DEVELOPMENT OF THE SITE.

6. ALL CONSTRUCTION UNDER AREAS SUBJECT TO VEHICULAR TRAFFIC SHALL BE CONSTRUCTED TO WITHSTAND A DIRECT H20 DESIGN LOAD. THE CONTRACTOR SHALL BE RESPONSIBLE TO PROTECT ALL UTILITY/SITE IMPROVEMENTS AREAS UNDER LANDSCAPED/NON-TRAFFIC BEARING AREAS FROM TEMPORARY CONSTRUCTION LOADS DURING CONSTRUCTION.

7. THE CONSTRUCTION SHOWN ON THESE PLANS REQUIRES AN ORDER OF CONDITIONS BE ISSUED BY THE ACTON CONSERVATION COMMISSION. THE CONTRACTOR SHALL OBTAIN A COPY OF SUCH ORDERS OF CONDITIONS PRIOR TO ANY SITE-RELATED DISTURBANCES AND SHALL COMPLY WITH APPROPRIATE CONDITIONS FOR CONSTRUCTION.

8. THE CONTRACTOR SHALL BE RESPONSIBLE FOR PROTECTING ALL ADJACENT PROPERTY FROM DAMAGE. ALL DAMAGES BY THE CONTRACTOR OR SUBCONTRACTORS SHALL BE REPAIRED.

9. THE CONTRACTOR SHALL MAINTAIN AND PROTECT ALL EXISTING SURVEY MONUMENTS (BOUNDS, PINS PIPES, DRILL HOLES, ETC.) THROUGHOUT ALL PHASES OF CONSTRUCTION. ANY DISTURBED MONUMENTS SHALL BE REPLACED BY A REGISTERED PROFESSIONAL LAND SURVEYOR AT THE EXPENSE OF THE CONTRACTOR. REFER TO WOODLANDS AT LAUREL HILL "COMPREHENSIVE PERMIT" SURVEY PLANS FOR LOCATION AND DESCRIPTION OF MONUMENTS.

10. THE ENGINEER SHALL BE NOTIFIED IMMEDIATELY UPON THE DISCOVERY OF ANY CONTRADICTORY, INCOMPLETE OR MISLABELED INFORMATION SHOWN ON THE PLANS OR PLANS PREPARED BY OTHERS. THE CONTRACTOR SHALL ALLOW FOR ADEQUATE TIME FOR THE ENGINEER TO RESPOND/PROVIDE DIRECTION FOR THE PLAN DISCREPANCY.

11. THE CONTRACTOR SHALL BE RESPONSIBLE FOR PROVIDING SHOP DRAWINGS OF PRODUCTS/MATERIALS TO THE ENGINEER AND/OR THE LOCAL APPROVING AUTHORITY AS REQUIRED IN THE CONSTRUCTION DOCUMENTS OR IF REQUIRED BY THE LOCAL AUTHORITY HAVING JURISDICTION OVER THE PRODUCT. ADEQUATE TIME SHALL BE ALLOWED FOR THE SHOP DRAWINGS TO BE REVIEWED AND RETURNED TO THE CONTRACTOR PRIOR TO ORDERING THE SPECIFIED PRODUCTS/MATERIALS.

12. OCCUPANCY OF ALL BUILDINGS RELIES ON THE EXTENSION OF OFF-SITE WATER SUPPLIES AND OTHER UTILITIES AND THE CONSTRUCTION AND CERTIFICATION FOR OPERATION OF THE WASTEWATER TREATMENT PLANT. THE CONTRACTOR SHALL PURSUE THE CONSTRUCTION OF THESE ITEMS EARLY ON IN THE PROCESS TO ENSURE ADEQUACY OF CONSTRUCTION AND COORDINATION.

13. DURING CONSTRUCTION IN OFF-SITE WAYS (NAGOG PARK ROAD, WESTFORD ROAD AND DURKEE LANE) ACCESS BY RESIDENTS, EMPLOYEES OF BUSINESS LOCATED IN THE OFFICE PARK AND ADJACENT BUSINESSES AND VISITORS TO SUCH AREAS SHALL NOT BE UNDULY OBSTRUCTED AND BY-PASS ROUTES SHALL BE PROVIDED FOR PUBLIC SAFETY ACCESS AT ALL TIMES. SEE OFF-SITE IMPROVEMENT PLANS FOR OTHER SPECIFIC CONSTRUCTION REQUIREMENTS.

SITE WORK NOTES:

1. THE LIMITS OF WORK SHALL BE FIELD ESTABLISHED PRIOR TO INITIATION OF ANY CONSTRUCTION, SITE EXPLORATIONS OR EARTHEN DISTURBANCE.

2. EROSION CONTROLS SHALL BE IMPLEMENTED PRIOR TO SITE CLEARING OR DISTURBANCE. SEE EROSION AND SEDIMENTATION CONTROL PLAN.

3. EXCEPT FOR THE SETUP FOR ENTRY TO THE SITE, NO CONSTRUCTION OR CONTRACTOR'S VEHICLES SHALL BE PARKED ON WESTFORD LANE OR NAGOG PARK ROAD. UNLESS COORDINATED WITH ADJACENT PROPERTY OWNERS, ALL CONSTRUCTION STAGING, STOCKPILE AND PARKING AREAS SHALL BE ONSITE NO PARKING SHALL BE PERMITTED ON ADJACENT PRIVATE WAYS.

4. LOAM SHALL BE STOCKPILED FOR RE-USE ON THE SITE TO THE EXTENT PRACTICAL. SEE EROSION AND SEDIMENTATION CONTROL PLAN.

5. ALL CONSTRUCTION VEHICLES SHALL GAIN ACCESS TO THE SITE FROM ROUTE 2A/119. NO CONSTRUCTION RELATED ACCESS SHALL BE MADE THROUGH THE ADJACENT NAGOG WOODS DEVELOPMENT (THROUGH THE "L" SHAPED PARCEL).

6. NO DEBRIS, JUNK, RUBBISH OR OTHER WASTE MATERIALS SHALL BE BURIED, BURNED OR OTHERWISE DISPOSED OF WITHIN THE LIMITS OF THE PROJECT. ALL WASTE, TRASH AND DEBRIS SHALL BE REMOVED FROM THE SITE AND DISPOSED OF IN ACCORDANCE WITH APPLICABLE LAWS. THE SITE SHALL BE KEPT IN A NEAT AND ORDERLY FASHION.

7. UNLESS OTHERWISE SHOWN OR SPECIFIED, ALL SITE CONSTRUCTION SHALL CONFORM TO THE REQUIREMENTS OF THE MASSACHUSETTS HIGHWAY DEPARTMENT (MHD) STANDARD SPECIFICATIONS FOR HIGHWAYS AND BRIDGES, LATEST ADDITION AND ACTON'S SUBDIVISION REGULATIONS, ROADWAY CONSTRUCTION REGULATIONS, AS APPLICABLE.

8. THE EROSION CONTROL MEASURES INCLUDED AS PART OF THIS SET ARE TO BE CONSIDERED THE MINIMUM STANDARDS FOR THE PREVENTION AND CONTROL OF EROSION, SEDIMENT TRANSPORT AND CONTROL OF DUST. THE CONTRACTOR SHALL BE RESPONSIBLE, AT ALL TIMES, FOR ADDITIONAL SITE-RELATED MEASURES TO ENSURE THE CONTROL OF RUNOFF, SEDIMENT AND DUST. THE CONTROL OF EROSION SHALL BE AN ONGOING PROCESS WHICH SHALL BE INSTALLED AS SOON AS IS POSSIBLE AND SHALL BE MAINTAINED AND UPDATED ON A REGULAR BASIS.

9. PRIOR TO INITIATION OF CONSTRUCTION TEMPORARY BENCHMARKS SHALL BE ESTABLISHED ALONG THE LIMIT OF WORK AREA, DUE TO THE EXTENSIVE EARTHWORKS, INTERMEDIARY HORIZONTAL AND VERTICAL CONTROLS WILL BE REQUIRED AND SHALL BE SET BY A MASSACHUSETTS REGISTERED LAND SURVEYOR. ELEVATIONS OF ALL TEMPORARY BENCHMARKS SHALL BE LABELED.

GENERAL NOTES FOR ACTON CONSTRUCTION

1. THE WATER SYSTEM PROVIDER FOR THE ACTON PORTION OF THE WORK IS THE ACTON WATER DISTRICT. CONSTRUCTION STANDARDS AND MATERIALS REQUIRED BY THAT AUTHORITY SHALL BE COMPLIED WITH.

2. WORK SHOWN WITHIN THE LIMITS OF THE CONSERVATION RESTRICTED AREA SHALL BE STABILIZED BY PLANTING IMMEDIATELY UPON COMPLETION OF SUCH WORK. CONSTRUCTION EQUIPMENT SHALL MINIMIZE THE REMOVAL AND DAMAGE TO ADJACENT TREES AND SHRUBS AND SHALL LIMIT DISTURBANCE TO THE SMALLEST WORK CORRIDOR PRACTICAL.

3. LOT 4 (TOWNHOMES) SHALL BE UNDERTAKEN AS A SEPARATE CONSTRUCTION PROCESS THAT SHALL BE COORDINATED WITH THE EXTENSION OF UTILITIES AND CONSTRUCTION OF THE SUBDIVISION ROADWAY.

4. THE CONSTRUCTION OF THE OFF-SITE IMPROVEMENTS ARE SHOWN ON A SET OF PLANS ENTITLED, "OFF SITE IMPROVEMENT PLANS" BY PLACES SITE CONSULTANTS, INC. THE WORK SHOWN THEREON SHALL BE COORDINATED WITH THE WORK SHOWN AS PART OF THIS PLAN SET.

5. NO FILL CONTAINING HAZARDOUS MATERIALS OR WASTE SHALL BE BROUGHT ONTO THE SITE OR USED IN ANY CONSTRUCTION ON THE SITE. THE TERM "HAZARDOUS MATERIALS OR WASTE" SHALL BE DEFINED BY THE TOWN OF ACTON'S BYLAWS FOR THAT TOPIC. ANY ORGANIC OR UNSUITABLE MATERIALS UNDERNEATH THE PROPOSED ROAD, DRIVEWAYS, PARKING AREAS OR SIDEWALKS SHALL BE REMOVED.

6. THE LIMITS OF WORK AND CLEARING SHALL BE FIELD-DELINEATED PRIOR TO THE START OF CONSTRUCTION OR INITIATION OF SITE CLEARING.

7. CATCHBASIN SUMPS, STORMWATER BASINS AND OTHER DRAINAGE SYSTEM COMPONENTS SHALL BE CLEANED IMMEDIATELY FOLLOWING THE COMPLETION OF CONSTRUCTION AND QUARTERLY THEREAFTER.

8. THE HAULING OF EARTH SHALL COMPLY WITH THE TIMEFRAMES PERMITTED IN THE ISSUED COMPREHENSIVE PERMIT FOR THE APARTMENT PORTION (LOTS 1, 2 & 3) OF THE PROJECT.

9. THE DEVELOPMENT OF LOT 4 IS SUBJECT TO THE REQUIREMENTS OF A CONSERVATION RESTRICTION WITH THE MASSACHUSETTS DEPARTMENT OF FISHERIES AND WILDLIFE, NATURAL HERITAGE AND ENDANGERED SPECIES PROGRAM. THE REQUIREMENTS OF THE CONSERVATION RESTRICTION SHALL BE ADHERED WITH DURING THE CONSTRUCTION OF THAT PORTION OF THE SITE.

10. THESE CONSTRUCTION DOCUMENTS ACCOMMODATE THE DEVELOPMENT OF LOT 4 AS A SEPARATE PROJECT SEQUENCE.

GENERAL NOTES FOR WESTFORD CONSTRUCTION

1. THE LITTLETON WATER DEPARTMENT IS THE WATER SYSTEM PROVIDER FOR THE WESTFORD PORTION OF THE PROJECT. THE CONSTRUCTION STANDARDS OF THAT WATER DISTRICT SHALL BE COMPLIED WITH FOR THE EXTENSION OF WATER TO THE SITE (IN ACTON) AND ALL CONSTRUCTION PROPOSED IN WESTFORD.

2. NO SNOW FROM AREAS OUTSIDE OF THE WESTFORD AQUIFER PROTECTION DISTRICT SHALL BE BROUGHT INTO THE DISTRICT AT ANY TIME.

3. THE CONSTRUCTION OF THE COMMON DRIVEWAY AND ACCESS TO THE WASTEWATER TREATMENT PLANT IS SHOWN ON A SET OF PLANS ENTITLED, COMMON DRIVEWAY / HAMMERHEAD LOT APPLICATION, BY PLACES SITE CONSULTANTS AND STAMSKY AND MIRAKY, INC. THE WORK SHOWN ON THAT PLAN SHALL BE COORDINATED WITH THE WORK DEPICTED HEREIN.

4. THE CONSTRUCTION OF THE OFF-SITE IMPROVEMENTS ARE SHOWN ON A SET OF PLANS ENTITLED, "OFFSITE IMPROVEMENT PLANS" BY PLACES SITE CONSULTANTS, INC. THE WORK SHOWN ON THAT PLAN SHALL BE COORDINATED WITH THE WORK DEPICTED HEREIN.

5. THE CONSTRUCTION OF THE WESTFORD APARTMENT UNITS, BUILDINGS NO. 6, 7, & 8 SHALL BE UNDERTAKEN AS PART OF THE OVERALL APARTMENT CONSTRUCTION PROCESS INCLUDING BUILDINGS 1 TO 5, 9 TO 11.

6. THE DEVELOPMENT OF THE PROJECT IN WESTFORD IS SUBJECT TO THE REQUIREMENTS OF A CONSERVATION RESTRICTION WITH THE MASSACHUSETTS DEPARTMENT OF FISHERIES AND WILDLIFE, NATURAL HERITAGE AND ENDANGERED SPECIES PROGRAM. THE REQUIREMENTS OF THE CONSERVATION RESTRICTION SHALL BE ADHERED WITH DURING THE CONSTRUCTION OF THAT PORTION OF THE SITE.

MATERIAL DEFINITIONS:

BITUMINOUS CONCRETE PAVEMENT — ALL SITE PAVING SHALL BE CLASS 1 BITUMINOUS CONCRETE. MIXTURES SHALL BE COMPOSED OF MINERAL AGGREGATE, MINERAL FILLER (IF REQUIRED) AND BITUMINOUS MATERIAL. THE MIXTURE MAY INCLUDE RECLAIMED ASPHALT PAVEMENT AT THE OPTION OF THE CONTRACTOR.

THE MIXTURE COMPOSITION AND TOLERANCES SHALL MEET THE SPECIFICATIONS FOR BINDER COURSE AND TOP COURSE MIXTURES AS SPECIFIED IN TABLE A OF SSHB M3.11.03.3. IF RECLAIMED ASPHALT PAVEMENT (RAP) IS USED IN THE MIXTURE, THE PROPORTION OF RAP TO VIRGIN AGGREGATE SHALL BE LIMITED TO A MAXIMUM OF 40% FOR DRUM MIX PLANTS AND 20% FOR MODIFIED BATCH PLANTS.

CAST IN PLACE CONCRETE — ALL SITE CAST IN PLACE CONCRETE AND RELATED REINFORCING SHALL MEET THE REQUIREMENTS OF THE MASSACHUSETTS STATE BUILDING CODE, THE AMERICAN CONCRETE INSTITUTE (ACI) AND THE AMERICAN SOCIETY OF TESTING AND MATERIALS (ASTM) FOR PRODUCT MATERIALS, FORM WORK, PLACEMENT AND CURING. ALL SITE CONCRETE SHALL HAVE A MINIMUM COMPRESSIVE STRENGTH OF 4,000 PSI UNLESS OTHERWISE REQUIRED IN THE CONSTRUCTION DOCUMENTS.

CRUSHED STONE — CRUSHED STONE SHALL BE THE SIZE AS INDICATED ON THE PLANS. THE STONE SHALL BE FROM A STONE QUARRY THAT PRODUCES HARD, ANGULAR DURABLE WASHED STONE FREE FROM DEBRIS AND ORGANIC MATERIALS. THE STONE SHALL MEET THE REQUIREMENTS OF SSHB M2.01.0

DENSE GRADED CRUSHED STONE — DENSE GRADED CRUSHED STONE SHALL CONSIST OF THE COMBINATION OF CRUSHER-RUN COARSE AGGREGATES (MEETING SSHB M2.01.0) AND FINE AGGREGATES OF NATURAL SAND OR STONE SCREENING UNIFORMLY PREMIXED WITH A PREDETERMINED QUANTITY OF WATER. COARSE AGGREGATE SHALL CONSIST OF HARD, DURABLE PARTICLES OF FRAGMENTS OF STONE. MATERIALS THAT BREAK UP WHEN ALTERNATELY FROZEN AND THAWED OR WETTED AND DRIED SHALL NOT BE USED. FINE AGGREGATE SHALL CONSIST OF NATURAL OR CRUSHED SAND. THE GRADATION/MATERIAL SHALL COMPLY WITH THE SPECIFICATIONS OF SSHB M2.01.7

GRAVEL BORROW — GRAVEL BORROW SHALL CONSIST OF INERT MATERIAL THAT IS HARD, DURABLE STONE AND COURSE SAND, FREE FROM CLAY, SURFACE COATINGS, ORGANIC AND DELETERIOUS MATERIAL. ALL GRAVEL BORROW SHALL MEET THE REQUIREMENTS OF SSHB M1.03.0. MAXIMUM STONE SIZE SHALL BE AS FOLLOWS:

TYPE A: 6" LARGEST DIMENSION
TYPE B: 3" LARGEST DIMENSION
TYPE C: 2" LARGEST DIMENSION

GLACIAL TILL — A. GLACIAL TILL: NATURAL INORGANIC SOLID APPROVED BY THE ENGINEER AND MEETING THE FOLLOWING REQUIREMENTS:

A. IT SHALL BE FREE OF ORGANIC OR OTHER WEAK OR COMPRESSIBLE MATERIALS AND STONES GREATER THAN TWO INCHES IN MAXIMUM DIMENSION.

B. IT SHALL BE A SILT LOAM AS DEFINED BY THE US DEPARTMENT OF AGRICULTURE SOIL TEXTURAL CLASSIFICATION.

C. THE SOIL SHALL CONSIST OF GREATER THAN 50% SILT, 12% TO 27% CLAY, OR 50% TO 80% SILT AND LESS THAN 12% CLAY.

LOAM (BORROW) — LOAM SHALL CONSIST OF NATURAL TOPSOIL, FREE FROM SUBSOIL, OBTAINED FROM AN AREA WHICH HAS NEVER BEEN STRIPPED. LOAM SHALL BE OF UNIFORM QUALITY, FREE FROM HARD CLODS, STIFF CLAY, HARDPAN, SOD, PARTIALLY DISINTEGRATED STONE, LIME, CEMENT, ASHES, SLAG, CONCRETE, TAR RESIDUE, TARRED PAPER, BOARDS, CHIPS OR ANY OTHER UNDESIRABLE MATERIAL.

LOAM SHALL CONTAIN BETWEEN 5.5 AND 7.5 PERCENT ORGANIC MATTER AS DETERMINED BY LOSS ON IGNITION OF A MOISTURE-FREE SAMPLE DRIED IN ACCORDANCE WITH THE CURRENT METHOD OF THE ASSOCIATION OF OFFICIAL AGRICULTURAL CHEMISTS.

THE ACIDITY RANGE OF THE LOAM SHALL BE PH 6.5 TO PH 7.5 INCLUSIVE.

THE MECHANICAL ANALYSIS OF THE SOIL SHALL BE AS FOLLOWS:

US SIEVE SIZE & NUMBER	PERCENT PASSING MINIMUM	MAXIMUM
1 INCH	100%	–
¼ INCH	97%	100%
NO. 100 (SAND)	40%	60%
NO. 100 (SILT & CLAY)	40%	60%

ORDINARY BORROW — ORDINARY BORROW SHALL CONSIST OF MATERIAL NOT SPECIFIED AS ANY OTHER EARTHEN MATERIAL. ORDINARY BORROW SHALL BE WELL GRADED, NATURAL INORGANIC MATERIAL ACCEPTABLE TO THE ENGINEER FOR THE GENERAL FILLING TO THE SPECIFIED SUB-GRADE. THE MATERIAL SHALL MEET THE FOLLOWING REQUIREMENTS:

A. IT SHALL BE FREE OF ORGANIC OR OTHER WEAK OR COMPRESSIBLE MATERIAL, OF FROZEN MATERIALS AND OF STONES LARGER THAN 6 INCHES IN MAXIMUM DIMENSION.

B. IT SHALL BE OF SUCH NATURE & CHARACTER THAT IT CAN BE COMPACTED TO THE SPECIFIED DENSITIES IN A REASONABLE AMOUNT OF TIME.

C. IT SHALL BE FREE OF HIGHLY PLASTIC CLAYS, OF ALL MATERIALS SUBJECT TO DECAY, DECOMPOSITION, AND OF CINDERS OR OTHER MATERIALS WHICH WILL CORRODE PIPING OR OTHER BURIED MATERIALS.

D. IT SHALL HAVE A MAXIMUM DRY DENSITY OF NOT LESS THAN 100 POUNDS PER CUBIC FOOT AND LESS THAN 40 % OF THE MATERIAL SHALL PASS THE NUMBER 200 SIEVE.

E. EXCAVATED ROCK & BOULDERS SMALLER THAN ONE CUBIC YARD IN SIZE MAY BE USED IN FILL AREAS UNDER LAWNS ONLY. PROVIDED THEY ARE A MINIMUM OF 24 INCHES BELOW THE SUBGRADE, PLACED AND COMPACTED IN LAYERS WITH NO VOIDS AND ALL INTERSTICES FILLED.

RIP RAP — RIP-RAP STONE SHALL BE SOUND, DURABLE ROCK, ANGULAR IN SHAPE. RIP RAP SHALL BE FREE FROM DEBRIS, ORGANIC OR DELETERIOUS MATERIAL. ROUNDED STONES, BOULDERS, SANDSTONE OR SIMILAR SOFT STONE OR RELATIVELY THIN SLABS WILL NOT BE PERMITTED UNLESS SPECIFICALLY PERMITTED BY THE DESIGN ENGINEER. ALL RIP RAP MATERIALS SHALL MEET THE REQUIREMENTS OF SSHB M2.02.0.

SAND BORROW — SAND BORROW SHALL CONSIST OF CLEAN INERT, HARD, DURABLE GRAINS OF QUARTZ OR OTHER HARD DURABLE ROCK, FREE FROM LOAM OR CLAY, SURFACE COATINGS AND DELETERIOUS MATERIALS. THE ALLOWABLE AMOUNT OF MATERIAL PASSING A #200 SIEVE AS DETERMINED BY AASHTO T 11 SHALL NOT EXCEED 10% MASS. ALL SAND BORROW SHALL MEET THE REQUIREMENTS OF SSHB M1.04.0. MAXIMUM STONE SIZE SHALL BE AS DEPICTED IN THE PLANS.

COMPACTION TESTING — ALL EARTHEN MATERIALS SHALL BE COMPACTED TO THE DRY DENSITY INDICATED IN THE CONSTRUCTION DOCUMENTS AND/OR AS IS REQUIRED BY CODE OR REGULATION. MAXIMUM DRY DENSITY SHALL BE DETERMINED FROM A SAMPLE OF THE MATERIAL TO BE USED AND TESTED IN ACCORDANCE WITH THE MODIFIED PROCTOR DRY DENSITY TEST AS DEFINED IN ASTM D1557, METHOD C.

AREAS THAT WERE TESTED AND FOUND TO BE INSUFFICIENTLY COMPACTED SHALL BE RE-TESTED AFTER THE ADDITIONAL COMPACTION HAS BEEN COMPLETED.

ABBREVIATIONS

ABBREVIATION	DEFINITION
AASHTO	AMERICAN ASSOCIATION OF STATE HIGHWAY AND TRANSPORTATION OFFICIALS
ABR	ABBREVIATION
AR-1	ACCESSIBLE RAMP - TYPE 1
AR-2	ACCESSIBLE RAMP - TYPE 2
AR-3	ACCESSIBLE RAMP - TYPE 3
ASTM	AMERICAN SOCIETY FOR TESTING AND MATERIALS
B&B	BALL & BURLAP
BC	BOTTOM CURB ELEVATION
BIT. CONC.	BITUMINOUS CONCRETE
BLDG	BUILDING
BM	BENCHMARK
BR	BOTTOM RAMP ELEVATION
CAL	CALIPER
CB	CONCRETE BOUND
CF	CUBIC FOOT
CI	CAST IRON PIPE
CMP	CORRUGATED METAL PIPE
CONC.	CONCRETE
CTB	CATCH BASIN
CY	CUBIC YARD
DH	DRILL HOLE
DI	DUCTILE IRON PIPE
DIA	DIAMETER
DMH	DRAIN MANHOLE
ELEV	ELEVATION
EMH	ELECTRIC MANHOLE
EX.	EXISTING
EXT.	EXTERIOR
FDN	FOUNDATION
FES	FLARED END SECTION
FFE	FINISH FLOOR ELEVATION
FG	FINISH GRADE
FND	FOUND
FSB	FIELD STONE BOUND
FT	FEET - LINEAR MEASURE
GAL	GALLON
GPM	GALLONS PER MINUTE
HDPE	HIGH DENSITY POLYETHYLENE PIPE
HP	HIGH POINT
HT	HEIGHT
I. PIN	IRON PIN
I. PIPE	IRON PIPE
ID	INSIDE DIAMETER
INV.	PIPE INVERT ELEVATION
LP	LOW POINT
MAX	MAXIMUM
MHB	MASS HIGHWAY BOUND
MIN	MINIMUM
MUTCD	MANUAL OF UNIFORM TRAFFIC CONTROL DEVICES
OC	ON CENTER
OD	OUTSIDE DIAMETER
OSHA	OCCUPATIONAL SAFETY AND HEALTH ADMINISTRATION
P&P	PLUG & PIN
PSI	POUNDS PER SQUARE INCH
PVC	POLYVINYL CHLORIDE PIPE
RCP	ROUND CONCRETE PIPE
R & S	REMOVE & STOCKPILE ITEM
REQ'D	REQUIRED
SB	STONE BOUND
SMH	SEWER MANHOLE
SPR	SPREAD
S&S	STAKE & STONE
SSHB	STANDARD SPECIFICATIONS OF HIGHWAYS & BRIDGES, THE COMMONWEALTH OF MASSACHUSETTS DEPARTMENT OF PUBLIC WORKS
STV	SLOPED TO VERTICAL CURB TRANSITION SEGMENT
TBM	TEMPORARY BENCH MARK
TC	TOP OF CURB ELEVATION
TMH	TELEPHONE MANHOLE
TOC	TOP OF CONCRETE FOUNDATION ELEVATION
TR	TOP OF RAMP ELEVATION
TYP	TYPICAL FOR ALL ITEMS SHOWN
UP	UTILITY POLE
VCCTS	VERTICAL GRANITE CURB TRANSITION SEGMENT

LEGEND

	EXISTING	PROPOSED
INDEX CONTOUR	100	100
INTERMEDIATE CONTOUR	99	99
SPOT GRADE	× 100.52	× 100.52
STONE WALL		
EDGE OF WOODS		
EDGE OF WATER BODY		
100 YEAR FLOOD LINE		
EDGE OF WETLAND		
25' BUFFER		
50' BUFFER		
75' BUFFER		
100' BUFFER		
WETLAND		
WETLAND FLAG	△ 02-19	
RIVERFRONT		
100' RIVER BUFFER		
200' RIVER BUFFER		
SILTATION BARRIER		
BUILDING SETBACK LINE		
WELL		
TREE		
FLAGPOLE		
BOUND		
DRILL HOLE		
IRON PIN		
BENCHMARK		
PERC TEST		
TEST PIT		
SOIL BORING		
EDGE OF GRAVEL		
EDGE OF WALK		
EXPANSION JOINT		
CONSTRUCTION JOINT		
EDGE OF PAVEMENT		
CAPE COD BERM		
BIT CONC. (TYPE 3)		
CONCRETE CURB		
VERT. GRANITE CURB		
SLOPED GRANITE CURB		
STOCKADE FENCE		
CHAIN LINK FENCE		
FENCE - OTHER		
FENCE GATE		
GUARD RAIL		
WOOD GUIDE RAIL		
ROOT BARRIER		
SIGN POST		
FOUNDATION DRAIN		
ROOF DRAIN		
DRAIN LINE		
DRAIN MANHOLE		
CATCHBASIN		
FLARED END IN/OUT		
CLEANOUT		
IRRIGATION LINE		
FIRE PROTECTION LINE		
WATER LINE		
WATER VALVE		
FIRE HYDRANT		
WATER SHUTOFF		
OVERHEAD WIRES		
UNDERGROUND WIRES		
GUY POLE		
UTILITY POLE		
GUY ANCHOR		
UTILITY BOX		
STREETLIGHT		
LAMP POST		
ELECTRIC MANHOLE		
TELEPHONE MANHOLE		
SEWER LINE		
SEWER FORCE MAIN		
LOW PRESSURE SEWER		
SEWER MANHOLE		
GAS LINE		
GAS VALVE		

GENERAL NOTES, LEGEND & ABBREVIATIONS

Senior Residence Development

Site Plan of Land in
ACTON & WESTFORD, MASS.

PREPARED FOR:
Woodlands at Laurel Hill, LLC
676 ELM STREET, SUITE 300
CONCORD, MA 01801

SCALE: AS SHOWN DATE: June 9, 2006

REVISIONS:
8-2-06 REVISIONS PER REVIEW COMMENTS

FOR PERMITTING PURPOSES ONLY
NOT FOR CONSTRUCTION

PLACES Site Consultants, Inc.
PLANNING LANDSCAPE ARCHITECTURE CIVIL ENGINEERING SURVEYING
694 MAIN STREET, SUITE 3
HOLDEN, MA 01520-1862
508.829.0333 Fax 508.829.0904
EMAIL places@verizon.net

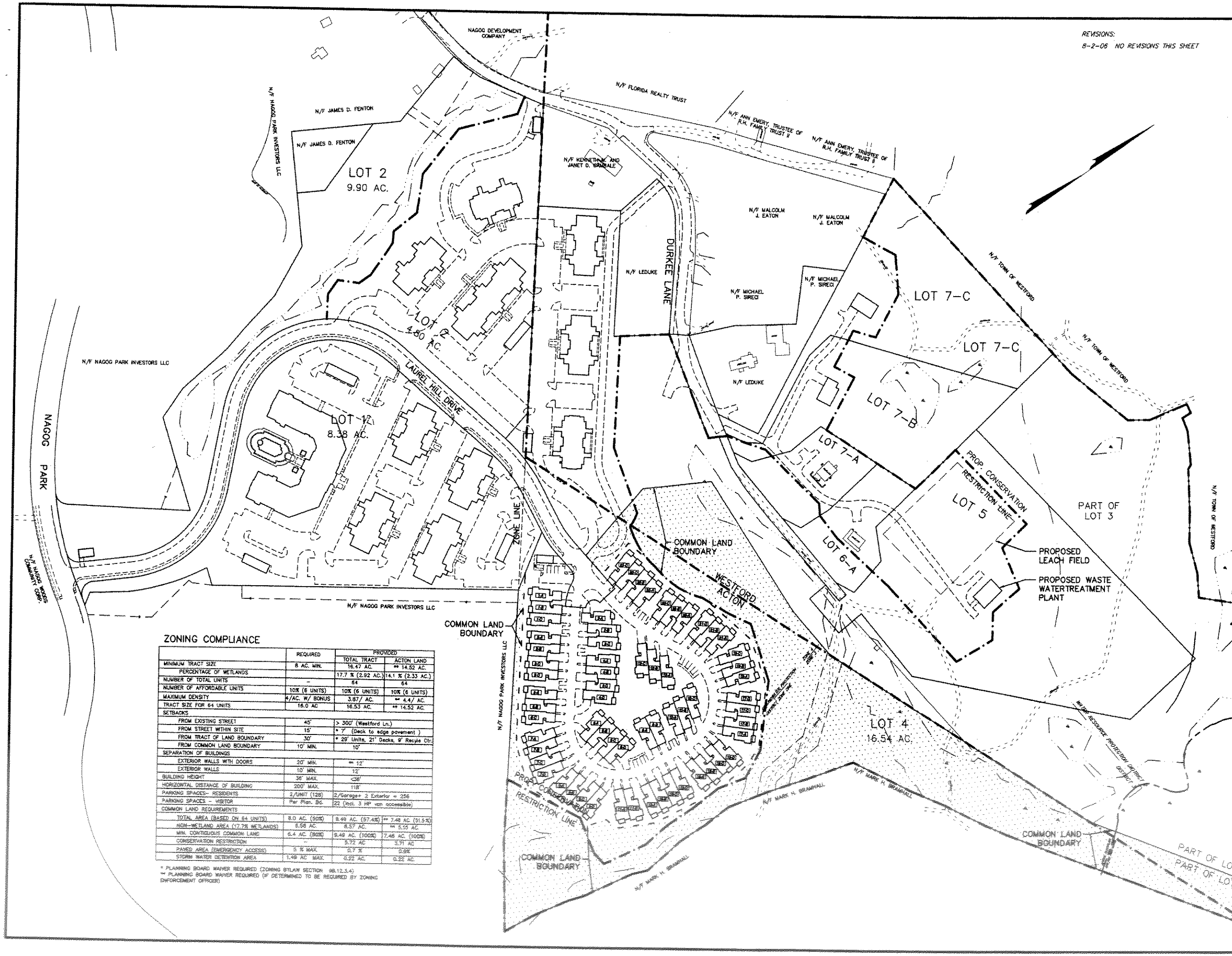

REVISIONS:
8-2-06 NO REVISIONS THIS SHEET

40B Development Plan in
ACTON & WESTFORD, MASS.

PREPARED FOR:
Woodlands at Laurel Hill, LLC
676 ELM STREET, SUITE 300
CONCORD, MA 01801

SCALE: 1"=100' DATE: June 9, 2006

PLACES Site Consultants, Inc.
PLANNING LANDSCAPE ARCHITECTURE CIVIL ENGINEERING SURVEYING
694 MAIN STREET, SUITE 3
HOLDEN, MA 01520-1862
508.829.0333 Fax 508.829.0904
EMAIL places@verizon.net

PROJECT No.: 06-349 PLAN No. 349-M-1

Senior Residence Development
MASTER PLAN

ZONING COMPLIANCE

	REQUIRED	PROVIDED	
		TOTAL TRACT	ACTON LAND
MINIMUM TRACT SIZE	8 AC. MIN.	16.47 AC.	** 14.52 AC.
PERCENTAGE OF WETLANDS		17.7 % (2.92 AC.)	14.1 % (2.33 AC.)
NUMBER OF TOTAL UNITS	–	64	64
NUMBER OF AFFORDABLE UNITS	10% (6 UNITS)	10% (6 UNITS)	10% (6 UNITS)
MAXIMUM DENSITY	4/AC. W/ BONUS	3.87/ AC.	** 4.4/ AC.
TRACT SIZE FOR 64 UNITS	16.0 AC	16.53 AC.	** 14.52 AC.
SETBACKS			
FROM EXISTING STREET	45'	> 300' (Westford Ln.)	
FROM STREET WITHIN SITE	15'	* 7' (Deck to edge pavement)	
FROM TRACT OF LAND BOUNDARY	30'	* 29' Units, 21' Decks, 9' Recyle Ctr.	
FROM COMMON LAND BOUNDARY	10' MIN.	10'	
SEPARATION OF BUILDINGS			
EXTERIOR WALLS WITH DOORS	20' MIN.	** 12'	
EXTERIOR WALLS	10' MIN.	12'	
BUILDING HEIGHT	36' MAX.	<36'	
HORIZONTAL DISTANCE OF BUILDING	200' MAX.	118'	
PARKING SPACES– RESIDENTS	2/UNIT (128)	2/Garage+ 2 Exterior = 256	
PARKING SPACES – VISITOR	Per Plan. Bd.	22 (incl. 3 HP van accessible)	
COMMON LAND REQUIREMENTS			
TOTAL AREA (BASED ON 64 UNITS)	8.0 AC. (50%)	9.49 AC. (57.4%)	** 7.48 AC. (51.5%)
NON–WETLAND AREA (17.7% WETLANDS)	6.58 AC.	6.57 AC.	** 5.15 AC.
MIN. CONTIGUOUS COMMON LAND	6.4 AC. (80%)	9.49 AC. (100%)	7.48 AC. (100%)
CONSERVATION RESTRICTION	–	5.72 AC	3.71 AC
PAVED AREA (EMERGENCY ACCESS)	5 % MAX.	0.7 %	0.9%
STORM WATER DETENTION AREA	1.49 AC MAX.	0.22 AC.	0.22 AC.

* PLANNING BOARD WAIVER REQUIRED (ZONING BYLAW SECTION 9B.12.3.4)
** PLANNING BOARD WAIVER REQUIRED (IF DETERMINED TO BE REQUIRED BY ZONING ENFORCEMENT OFFICER)

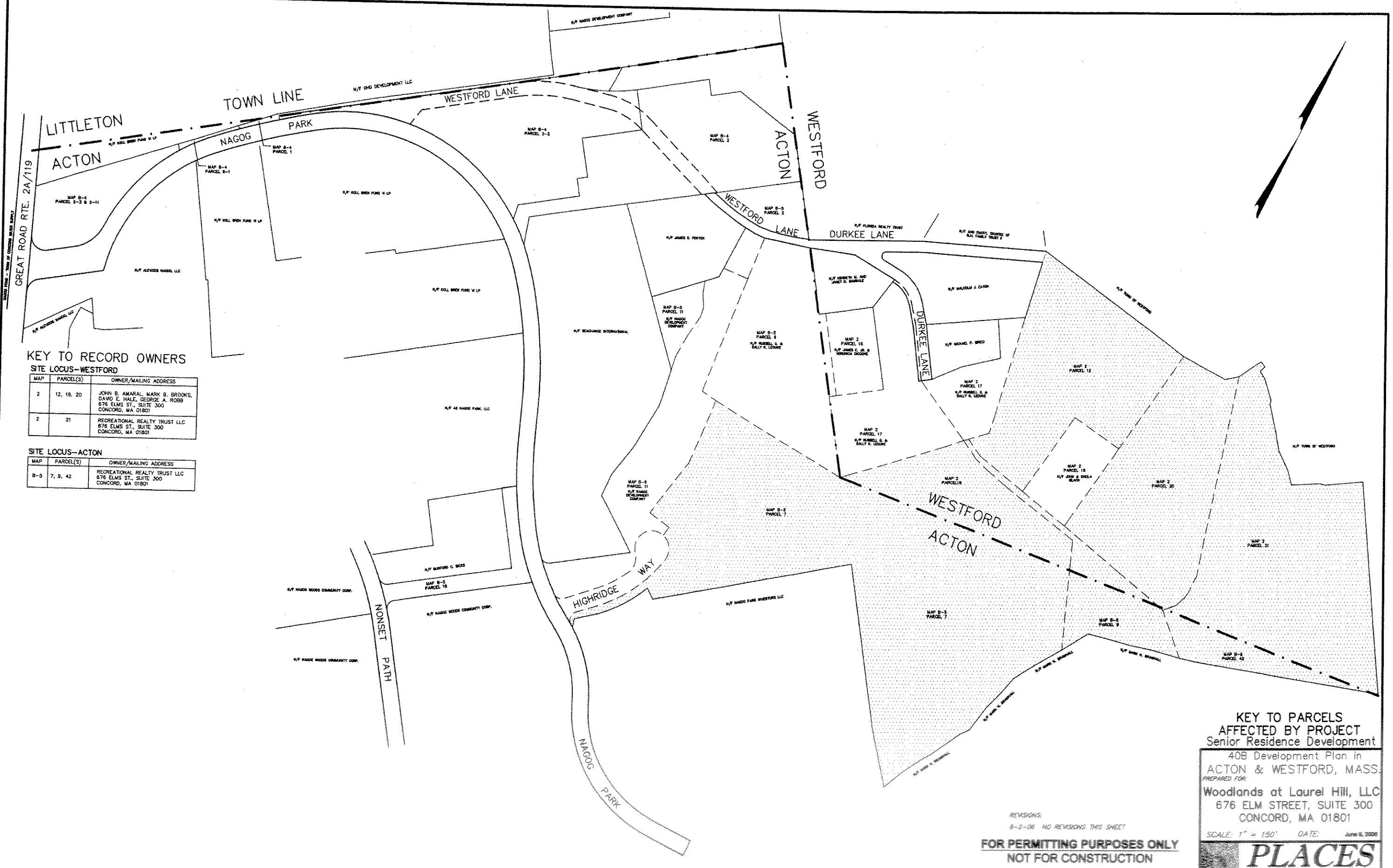

KEY TO RECORD OWNERS

SITE LOCUS–WESTFORD

MAP	PARCEL(S)	OWNER/MAILING ADDRESS
2	12, 18, 20	JOHN B. AMARAL, MARK B. BROOKS, DAVID E. HALE, GEORGE A. ROBB 676 ELMS ST., SUITE 300 CONCORD, MA 01801
2	21	RECREATIONAL REALTY TRUST LLC 676 ELMS ST., SUITE 300 CONCORD, MA 01801

SITE LOCUS–ACTON

MAP	PARCEL(S)	OWNER/MAILING ADDRESS
B-5	7, 9, 42	RECREATIONAL REALTY TRUST LLC 676 ELMS ST., SUITE 300 CONCORD, MA 01801

REVISIONS:
8-2-06 NO REVISIONS THIS SHEET

FOR PERMITTING PURPOSES ONLY
NOT FOR CONSTRUCTION

GRAPHIC SCALE
150 0 75 150 300 600
(IN FEET)
1 inch = 150 ft.

KEY TO PARCELS AFFECTED BY PROJECT

Senior Residence Development
40B Development Plan in
ACTON & WESTFORD, MASS.

PREPARED FOR:
Woodlands at Laurel Hill, LLC
676 ELM STREET, SUITE 300
CONCORD, MA 01801

SCALE: 1" = 150' DATE: June 9, 2006

PLACES Site Consultants, Inc.
PLANNING LANDSCAPE ARCHITECTURE CIVIL ENGINEERING SURVEYING
624 MAIN STREET, SUITE 3
HOLDEN, MA 01520-1862
508.829.6333 Fax 508.829.9904
EMAIL places@verizon.net

PROJECT No.: 06-348 PLAN No. 348-S-1

PLAN NOTES:

1. SEE EROSION AND SEDIMENTATION CONTROL PLAN FOR MEASURES TO BE UTILIZED BEFORE, DURING AND AFTER CONSTRUCTION TO PREVENT DUST, SEDIMENT AND RUNOFF FROM AFFECTING SURROUNDING AREAS. THESE MEASURES ARE TO BE CONSIDERED THE MINIMUM MEASURES TO BE UTILIZED. THE CONTRACTOR SHALL BE RESPONSIBLE FOR EROSION AND SEDIMENTATION CONTROL AT ALL TIMES.

2. PRIOR TO THE INITIATION OF CONSTRUCTION OF THE SITE OR BUILDINGS, A NPDES APPLICATION MUST BE FILED WITH THE U.S. EPA BY THE SITE CONTRACTOR AND THE OWNER.

3. PRIOR TO CONSTRUCTION OR SITE DISTURBANCE, THE EROSION CONTROL MEASURES (SILT FENCES, HAY BALE BARRIERS AND FILTERED CATCHBASIN INLETS) SHALL BE IN-PLACE AND FUNCTIONING.

4. AS NOTED ON THE PLAN, THE EXISTING PARTIALLY COMPLETED DRAINAGE BASINS SHALL BE CLEANED OF ACCUMULATED SILT AND DEBRIS. THESE BASINS ARE TO BE USED AS TEMPORARY SEDIMENTATION BASINS DURING THE CONSTRUCTION PERIOD. THEY SHALL BE TEMPORARILY STABILIZED BY PLANTING.

5. ONCE ALL TRIBUTARY SURFACES TO THE TEMPORARY SEDIMENTATION BASINS HAVE BEEN STABILIZED BY PLANTINGS OR HARD SURFACE (PAVING OR BUILDINGS), THE BASINS SHALL BE CLEANED OF ACCUMULATED SILT AND BROUGHT TO FINAL DESIGN GRADES AND STABILIZED AGAIN.

6. TEMPORARY SEDIMENTATION TRENCHES AND PONDS SHALL BE CREATED AT THE TOP, MIDDLE AND BOTTOMS OF SLOPE AND UN-STABILIZED AREAS. EACH TEMPORARY BASIN SHALL HAVE A VOLUME OF TO SUPPORT 1/2" OF RAIN OVER 1 ACRE (43,560 SF) WITHOUT OVERFLOWING.

7. SEDIMENTATION CONTROL MEASURES SHALL NOT RELY ON END-OF-THE-LINE MEASURES. AS NOTED ABOVE, THEY SHALL BE PLACED THROUGHOUT THE DISTURBED AREA.

8. ELEVATIONS ARE BASED ON NGVD 1929. PERIMETER PROPERTY LINES ARE NOT CORRELATED TO THE MASSACHUSETTS COORDINATE SYSTEM.

WESTFORD LANE

DURKEE LANE

NAGOG PARK

NONSET PATH

HIGHRIDGE WAY

TOWN LINE

N/F KOLL BREN FUND VI LP

N/F NORTH ACTON TREATMENT CORP.

N/F JAMES D. FENTON

N/F MAGOG PARK INVESTORS LLC

N/F MALCOLM J. EATON

N/F MICHAEL P. SIRECI

N/F ANN EMERY, TRUSTEE OF B.M. FAMILY TRUST

N/F FLORIDA REALTY TRUST

N/F TOWN OF WESTFORD

N/F MARK H. BRAMHALL

N/F SHEFFORD C. WOODS

N/F NAGOG WOODS COMMUNITY CORP.

PROVIDE SILTATION BARRIER AT LIMIT OF CLEARING

TBM B HIGH POINT CONCRETE BOUND/DRILL HOLE ELEV.=220.88

INSTALL TEMPORARY CONSTRUCTION ENTRANCE AT ACCESS ROAD ENTRANCE

SEE ROADWAY IMPROVEMENT PLANS FOR EXISTING CONDITIONS, DEMOLITION AND CONSTRUCTION REQUIREMENTS IN WESTFORD/DURKEE LANE

RIGHT OF WAY IS LIMIT OF WORK ALONG DURKEE LANE - SEE ROADWAY & UTILITY IMPROVEMENT PLANS

PROPERTY LINE IS LIMIT OF WORK

MAINTAIN & PROTECT CATHEAD MOOR

EXISTING STRUCTURES TO BE DEMOLISHED

EXISTING RETAINING WALL TO BE DEMOLISHED

PROVIDE DOUBLE ROW OF SILTATION BARRIER AT EDGE OF WOODS

INSTALL SILTATION BARRIER AT LIMIT OF WORK

PROVIDE TEMPORARY SILT FENCE CHECK DAMS AT 50' INTERVALS AND TRAP RUNOFF ALONG DISTURBED SIDE SLOPE TO STORMWATER BASIN UNTIL DRAINAGE SYSTEM IS ON-LINE

EXISTING DRAINAGE BASIN/WETLAND - REMOVE ACCUMULATED SEDIMENT FROM BOTTOM OF BASIN

MAINTAIN & PROTECT EXISTING DWELLINGS

EXISTING DWELLING & RELATED STRUCTURES TO BE DEMOLISHED

INSTALL SILTATION BARRIER ALONG GRAVEL DRIVE UNTIL COMMON DRIVEWAY IS INSTALLED

EXISTING PILE OF ASPHALT PAVING TO BE RECYCLED

EXISTING DRAINAGE BASIN - REMOVE SEDIMENT TO ELEVATION 258.0

INSTALL SILTATION BARRIER AT LIMIT OF CLEARING/LIMIT OF WORK

PROPERTY LINE IS LIMIT OF WORK

TBM A HIGH POINT CONCRETE BOUND/DRILL HOLE ELEV.=233.77

PROPERTY LINE IS LIMIT OF WORK/CLEARING

- HIGHRIDGE WAY TO BE RECONSTRUCTED
- REMOVE & DISPOSE EXISTING SEWER MAIN IN HIGHRIDGE WAY - PLUG AT NAGOG PARK (3)#1
- REMOVE & DISPOSE EXISTING WATER MAIN IN HIGHRIDGE WAY - SEE UTILITY PLANS FOR WATER SYSTEM IMPROVEMENTS IN NAGOG PARK
- REMOVE & DISPOSE EXISTING PAVING, CURBING AND OTHER IMPROVEMENTS WITHIN HIGHRIDGE WAY. SAW CUT PAVEMENT AT INTERSECTION WITH NAGOG PARK
- PROVIDE FILTERED CATCHBASIN INLETS FOR EXISTING CATCH BASINS AS REQUIRED.

SEE ROADWAY & UTILITY IMPROVEMENT PLAN SET FOR WORK WITHIN THE L SHAPED PARCEL

GRAPHIC SCALE

(IN FEET)
1 inch = 100 ft.

FOR PEMITTING PROCESS ONLY
NOT FOR CONSTRUCTION

REVISIONS:
8-2-06 REVISIONS PER REVIEW COMMENTS

EXISTING CONDITIONS AND DEMOLITION PLAN

40B Development Plan in
ACTON & WESTFORD, MASS

PREPARED FOR:
Woodlands at Laurel Hill, LLC
676 ELM STREET, SUITE 300
CONCORD, MA 01801

SCALE: 1" = 100' DATE: June 9, 2006

PLACES Site Consultants, Inc
PLANNING LANDSCAPE ARCHITECTURE CIVIL ENGINEERING SURVEYING
694 MAIN STREET, SUITE 3
HOLDEN, MA 01520-1862
508.829.9933 Fax 508.829.0904
EMAIL places@verizon.net

PROJECT No.: 05-346 PLAN No. 346-EC1

WATERSHED "A" EROSION CONTROL SEQUENCE

WATERSHED AREA = 8.4 ACRES
MINIMUM SEDIMENT BASIN VOLUME REQUIRED = 33,840 CF

1. INSTALL SILTATION BARRIERS AS SHOWN
2. CLEAN EXISTING DRAINAGE BASIN AND SWALE OF DEBRIS AND SEDIMENT. SEE GRADING PLAN FOR BASIN GRADE REQUIREMENTS.
3. CONSTRUCT BERM AND OUTFALL FOR EXISTING DRAINAGE BASIN.
4. INSTALL TEMPORARY SEDIMENT TRAP AND OUTLET ON EASTERLY SIDE OF ACCESS DRIVEWAY.
5. CONSTRUCT TEMPORARY DIVERSION SWALES AS SHOWN.

WATERSHED "B" EROSION CONTROL SEQUENCE

WATERSHED AREA = 4.9 ACRES
MINIMUM SEDIMENT BASIN VOLUME REQUIRED = 17,640 CF

1. INSTALL SILTATION BARRIERS AS SHOWN
2. INSTALL TEMPORARY CONSTRUCTION ENTRANCE.
3. INSTALL OUTLET CONTROL STRUCTURE AND WESTFORD LANE CROSS CULVERTS (SEE ROADWAY AND UTILITY IMPROVEMENT PLANS FOR CONSTRUCTION REQUIREMENTS).
4. CONSTRUCT TEMPORARY SEDIMENTATION BASINS AND OUTLET CONTROL STRUCTURES.
5. CONSTRUCT TEMPORARY DIVERSION SWALES AS SHOWN.

WATERSHED "C" EROSION CONTROL SEQUENCE

WATERSHED AREA = 8.6 ACRES
MINIMUM SEDIMENT BASIN VOLUME REQUIRED = 30,960 CF

1. INSTALL SILTATION BARRIERS AS SHOWN
2. CONSTRUCT DRAIN TRUNK LINE AND CROSS CULVERT IN DURKEE LANE (SEE ROADWAY AND UTILITY IMPROVEMENT PLANS).
3. CONSTRUCT LOWER SEDIMENTATION BASIN & OUTLET CONTROL STRUCTURE ADJACENT TO DURKEE LANE.
4. INSTALL DRAIN LINE UP SIDE SLOPE TO UP-SLOPE TEMPORARY SEDIMENTATION BASIN.
5. CONSTRUCT UPPER TEMPORARY SEDIMENTATION BASIN & OUTLET CONTROL STRUCTURE.
6. CONSTRUCT TEMPORARY DIVERSION SWALES AS SHOWN.

WATERSHED "D" EROSION CONTROL SEQUENCE

WATERSHED AREA = 3.7 ACRES
MINIMUM SEDIMENT BASIN VOLUME REQUIRED = 13,320 CF

1. INSTALL SILTATION BARRIERS AS SHOWN
2. INSTALL DRAIN OUTFALL FROM WETLAND TO BASIN "A".
3. CONSTRUCT BASIN "A" AND OUTLET CONTROL STRUCTURE.
4. INSTALL DRAIN LINE FROM BASIN "A" TO TEMPORARY SEDIMENTATION BASIN.
5. CONSTRUCT TEMPORARY SEDIMENTATION BASIN & OUTLET CONTROL STRUCTURE.
6. CONSTRUCT TEMPORARY DIVERSION SWALES AS SHOWN.

WATERSHED "E" EROSION CONTROL SEQUENCE

WATERSHED AREA = 1.6 ACRES
MINIMUM SEDIMENT BASIN VOLUME REQUIRED = 5,760 CF

1. INSTALL SILTATION BARRIERS AS SHOWN
2. CONSTRUCT TEMPORARY SEDIMENTATION BASIN IN LOT 7-C.

WATERSHED "F" EROSION CONTROL SEQUENCE

WATERSHED AREA = 1.7 ACRES
MINIMUM SEDIMENT BASIN VOLUME REQUIRED = 6,120 CF

1. INSTALL SILTATION BARRIERS AS SHOWN
2. CONSTRUCT TEMPORARY SEDIMENTATION BASIN WITH OUTFALL ON THE NORTHERLY PORTION OF LOT 5 AS SHOWN.
3. CONSTRUCT TEMPORARY SEDIMENT TRAPS AND DIVERSION SWALES AS REQUIRED DURING CONSTRUCTION OF THE LEACH FIELD.

WATERSHED "G" EROSION CONTROL SEQUENCE

WATERSHED AREA = 1.4 ACRES
MINIMUM SEDIMENT BASIN VOLUME REQUIRED = 5,040 CF

1. INSTALL SILTATION BARRIERS AS SHOWN
2. CONSTRUCT TEMPORARY SEDIMENTATION BASIN WITH OUTFALL ON THE EASTERLY PORTION OF LOT 3 AS SHOWN.
3. CONSTRUCT TEMPORARY SEDIMENT TRAPS AND DIVERSION SWALES AS REQUIRED DURING CONSTRUCTION OF THE LEACH FIELD & WWTP BUILDING.

GENERAL EROSION CONTROL SEQUENCES:

1. INSTALL SILTATION BARRIERS AS SHOWN
2. CONSTRUCT TEMPORARY SEDIMENTATION BASINS, SEDIMENT TRAPS, DIVERSION SWALES OR OTHER EROSION CONTROL MEASURES AS REQUIRED DURING CONSTRUCTION.
3. SEDIMENT CONTROL STRUCTURES MAY BE REMOVED WHEN THE TRIBUTARY AREA HAS BEEN STABILIZED WITH VEGETATION, PAVEMENT OR OTHER PERMANENT SURFACE STABILIZATION METHODS.

WATERSHED A
WATERSHED B
WATERSHED C
WATERSHED D
WATERSHED E
WATERSHED F
WATERSHED G

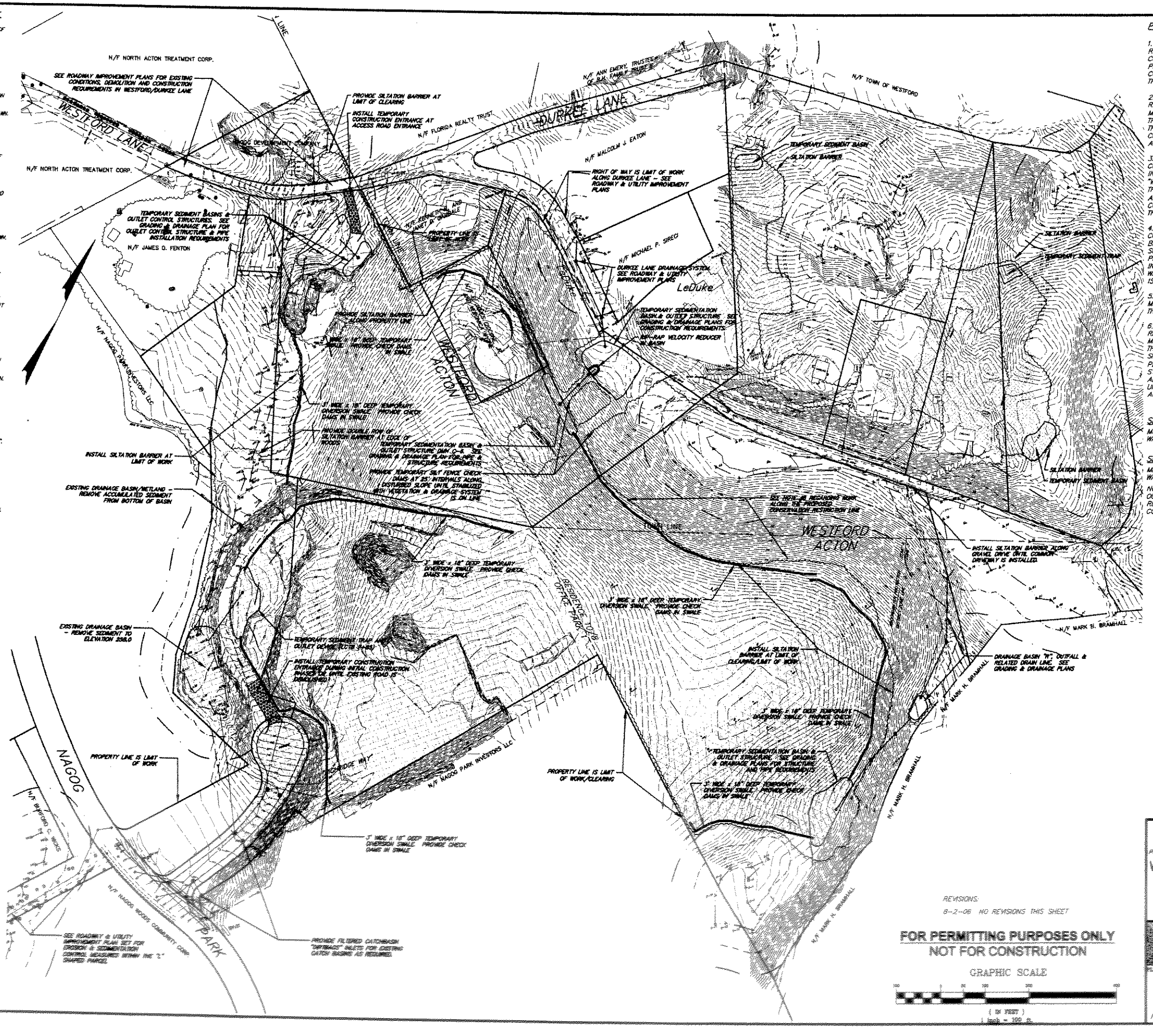

PLAN NOTES:

1. THE INTENT OF THIS PLAN IS TO SHOW REGULATORY AGENCIES A SAMPLE OF A SWPPP THAT COMPLIES TO THE NPDES GENERAL CONSTRUCTION PERMIT REQUIREMENTS AND A SEQUENCING OF CONSTRUCTION FOR THE CONTROL OF EROSION DURING THE DEVELOPMENT OF THE SITE.
2. THE CONTRACTOR/DEVELOPER WILL BE RESPONSIBLE FOR PREPARING A SITE AND MACHINERY/MANPOWER SPECIFIC SWPPP AS PART OF THE PREPARATION OF A NPDES PERMIT APPLICATION. THE ACTUAL SWPPP WILL VARY BASED UPON THE CONTRACTORS CAPABILITIES, CONSTRUCTION SCHEDULE AND SITE DEVELOPMENT PROCESS.
3. THE DISTINCT EROSION AND SEDIMENTATION CONTROL MEASURES SHOWN ON THIS PLAN ARE INTENDED FOR THE INITIAL DEVELOPMENT OF EACH "WATERSHED" TRIBUTARY TO EACH SEDIMENT BASIN. THE CONTRACTOR IS RESPONSIBLE FOR MAINTAINING AND/OR MODIFYING THE EROSION & SEDIMENTATION CONTROLS AS THE SITE DEVELOPMENT CONTINUES AND THE NEEDS FOR EROSION CONTROLS CHANGE.
4. THE MEASURES SHOWN HEREON ARE TO BE CONSIDERED THE MINIMUM MEASURES TO BE USED BEFORE AND DURING CONSTRUCTION, UNTIL DISTURBED SURFACES ARE STABILIZED EITHER TEMPORARILY OR PERMANENTLY. THE CONTRACTOR IS ENCOURAGED TO INSTALL INTERMEDIATE CONTROLS INTERIOR TO EACH WATERSHED. THE USE OF END OF THE LINE CONTROLS IS STRONGLY DISCOURAGED.
5. THE WATERSHED AREAS AS NOTED ON THE PLANS MAY BE DEVELOPED CONCURRENTLY AND SHALL FOLLOW THE CONSTRUCTION SEQUENCING NARRATIVE.
6. ALL WORK ALONG THE PROPOSED CONSERVATION RESTRICTION LINE SHALL BE STAKED OUT BY A MASSACHUSETTS REGISTERED LAND SURVEYOR PRIOR TO THE INSTALLATION OF SILTATION FENCE AND RELATED SITE CLEARING & DEMOLITION. UNLESS SPECIFICALLY PERMITTED/SHOWN IN THE DESIGN DRAWINGS, NO WORK, STORAGE OF MATERIALS OR OTHER ACTIVITY SHALL BE ALLOWED WITHIN THE CONSERVATION RESTRICTION UNLESS SPECIFICALLY PERMITTED BY THE APPROVING AUTHORITY.

SEDIMENTATION BASIN SIZING REQUIREMENT

MINIMUM REQUIRED STORAGE = 3,600 CF X TOTAL WATERSHED AREA

SEDIMENTATION TRAP SIZING REQUIREMENT

MINIMUM REQUIRED STORAGE = 1,800 CF X TOTAL WATERSHED AREA

NOTE: SEDIMENT BASINS, SEDIMENT TRAPS AND RELATED OUTFALL STRUCTURES SHALL BE DESIGNED BY A REGISTERED PROFESSIONAL ENGINEER PRIOR TO CONSTRUCTION.

SEQUENCED STORMWATER POLLUTION PREVENTION PLAN

Senior Residence Development

40B Development Plan in
ACTON & WESTFORD, MASS.

PREPARED FOR:
Woodlands at Laurel Hill, LLC
676 ELM STREET, SUITE 300
CONCORD, MA 01801

SCALE: 1" = 100' DATE: June 9, 2008

REVISIONS:
8-2-08 NO REVISIONS THIS SHEET

FOR PERMITTING PURPOSES ONLY
NOT FOR CONSTRUCTION

GRAPHIC SCALE
100 0 100 200 400
(IN FEET)
1 inch = 100 ft.

PLACES Site Consultants, Inc.
PLANNING LANDSCAPE ARCHITECTURE CIVIL ENGINEERING SURVEYING
694 MAIN STREET, SUITE 3
HOLDEN, MA 01520-1862
508.829.0333 Fax 508.829.0904
EMAIL places@verizon.net

PROJECT No.: 08-348 PLAN No. 348-SWPP-1

GRAPHIC SCALE

(IN FEET)
1 inch = 20 ft.

FOR PERMITTING PURPOSES ONLY
NOT FOR CONSTRUCTION

Site Plan of Land in
ACTON & WESTFORD, MASS.

PREPARED FOR:
Woodlands at Laurel Hill, LLC
676 ELM STREET, SUITE 300
CONCORD, MA 01801

SCALE: 1"=20' DATE: June 9, 2006

PLACES
Site Consultants, Inc.
PLANNING LANDSCAPE ARCHITECTURE CIVIL ENGINEERING SURVEYING
694 MAIN STREET, SUITE 3
HOLDEN, MA 01520-1862
508.829.0333 Fax 508.829.0904
EMAIL places@verizon.net

PROJECT No.: 06-349 PLAN No. 349-S-1

Senior Residence Development
SITE PLAN

REVISIONS:
8-2-06 REVISIONS PER REVIEW COMMENTS

PLAN NOTES:

1. THIS PLAN SET DEPICTS THE PROPOSED DEVELOPMENT OF LOT 4 ONLY. SEE PROPOSED DEVELOPMENT PLANS ENTITLED "THE WOODLANDS AT LAUREL HILL, COMPREHENSIVE PERMIT" PREPARED BY PLACES SITE CONSULTANTS FOR THE DEVELOPMENT OF THE REMAINDER OF THE SITE.

LOT 3
SEE "THE WOODLANDS AT LAUREL HILL COMPREHENSIVE PERMIT" SITE PLANS

LOT 1

N/F NAGOG PARK INVESTORS LLC

LAUREL HILL DRIVE

TOWN LINE
WESTFORD
ACTON

ZONE LINE

OP-1
R 10/8

100' WETLAND BUFFER ZONE

PROPOSED CONSERVATION RESTRICTION LINE

STOP SIGN & PAINTED STOP LINE & LETTERING

STOP

14' SPEED BUMP (SEE DETAIL)

AR-BUMP

SMH 101

"AUTHORIZED VEHICLES ONLY, DO NOT ENTER" SIGNS, BOTH SIDES

PAINTED TRAFFIC ISLAND AT INTERSECTION

PAINTED "BUMP" SEE SPEED BUMP DETAIL

"BUMP" SIGN SEE SPEED BUMP DETAIL

RECYCLING CENTER EL=295.5

LANDING

PAINTED CROSSWALK

ACCESSIBLE RAMP

SITE STAIRS - 5' WIDE WALK

AR-2

PAINTED ACCESSIBLE PARKING STALL & LOADING ZONE - SEE DETAIL

RETAINING WALL GRADE BREAK & SCREENING FENCE

PAINTED STOP LINE & LETTERING

PROVIDE MINIMUM 4' HIGH PROTECTIVE FENCE ALONG RETAINING WALL WHERE WALL HEIGHT EXCEEDS 4' HEIGHT

RETAINING WALL & 4' HIGH PROTECTIVE FENCE

"CONSERVATION RESTRICTION AREA - NO LAND ALTERATION ALLOWED" SIGNS - PLACE ALONG CONSERVATION RESTRICTION LINE AS SHOWN

CONDENSOR UNIT PAD (TYPICAL)

DECK OR PATIO (TYPICAL)

OVERFLOW/VISITOR PARKING

GRADE BREAK & RETAINING WALL

CURB STOP (TYP.)

5' WIDE BIT. CONC. WALK

MAIL STATION & BENCH - SEE LANDSCAPE PLANS

ACCESSIBLE PARKING SIGN W/VAN ACCESSIBLE PLACARD

PAINTED ACCESSIBLE PARKING STALL & LOADING ZONE - SEE DETAIL

RETAINING WALL & 4' HIGH PROTECTIVE FENCE

1-A FF=293.0 GAR=290.5
1-B FF=293.5 GAR=293.0
1-C FF=293.5 GAR=293.0
2-A FF=293.5 GAR=293.0
2-B FF=294.0 GAR=293.5
2-C FF=294.0 GAR=293.5
3-A FF=294.0 GAR=293.5
3-B FF=294.0 GAR=293.5
3-C FF=293.5 GAR=293.0
3-D FF=293.0 GAR=292.5
4-A FF=294.0 GAR=293.5
4-B FF=294.0 GAR=293.5
4-C FF=293.0 GAR=292.5
4-D FF=292.0 GAR=291.0
5-A FF=292.0 GAR=291.0
5-B FF=291.0 GAR=290.0
25-A FF=287.0 GAR=285.5 WALKOUT=274.0
25-B FF=288.0 GAR=285.5 WALKOUT=274.0
25-C FF=289.0 GAR=285.5 WALKOUT=277.0
25-D FF=290.0 GAR=285.5 WALKOUT=278.0
23-A FF=286.0 GAR=285.5 WALKOUT=274.0
23-B FF=286.0 GAR=285.5 WALKOUT=274.0
23-C FF=286.0 GAR=285.5 WALKOUT=274.0
21-A FF=285.5 GAR=285.0 WALKOUT=273.5
21-B FF=285.5 GAR=285.0 WALKOUT=273.5
21-C FF=285.5 GAR=285.0 WALKOUT=273.5
19-A FF=286.5 GAR=286.0 WALKOUT=274.5
19-B FF=286.5 GAR=286.0 WALKOUT=274.5
19-C FF=286.5 GAR=286.0 WALKOUT=274.5
17-B FF=286.0 GAR=285.5 WALKOUT=274.0
17-C FF=286.0 GAR=285.5 WALKOUT=275.0
17-D FF=286.5 GAR=286.0 WALKOUT=274.5
12-A FF=286.5 GAR=285.5
12-B FF=286.5 GAR=285.5
12-C FF=286.5 GAR=285.5
10-C FF=285.5 GAR=284.5

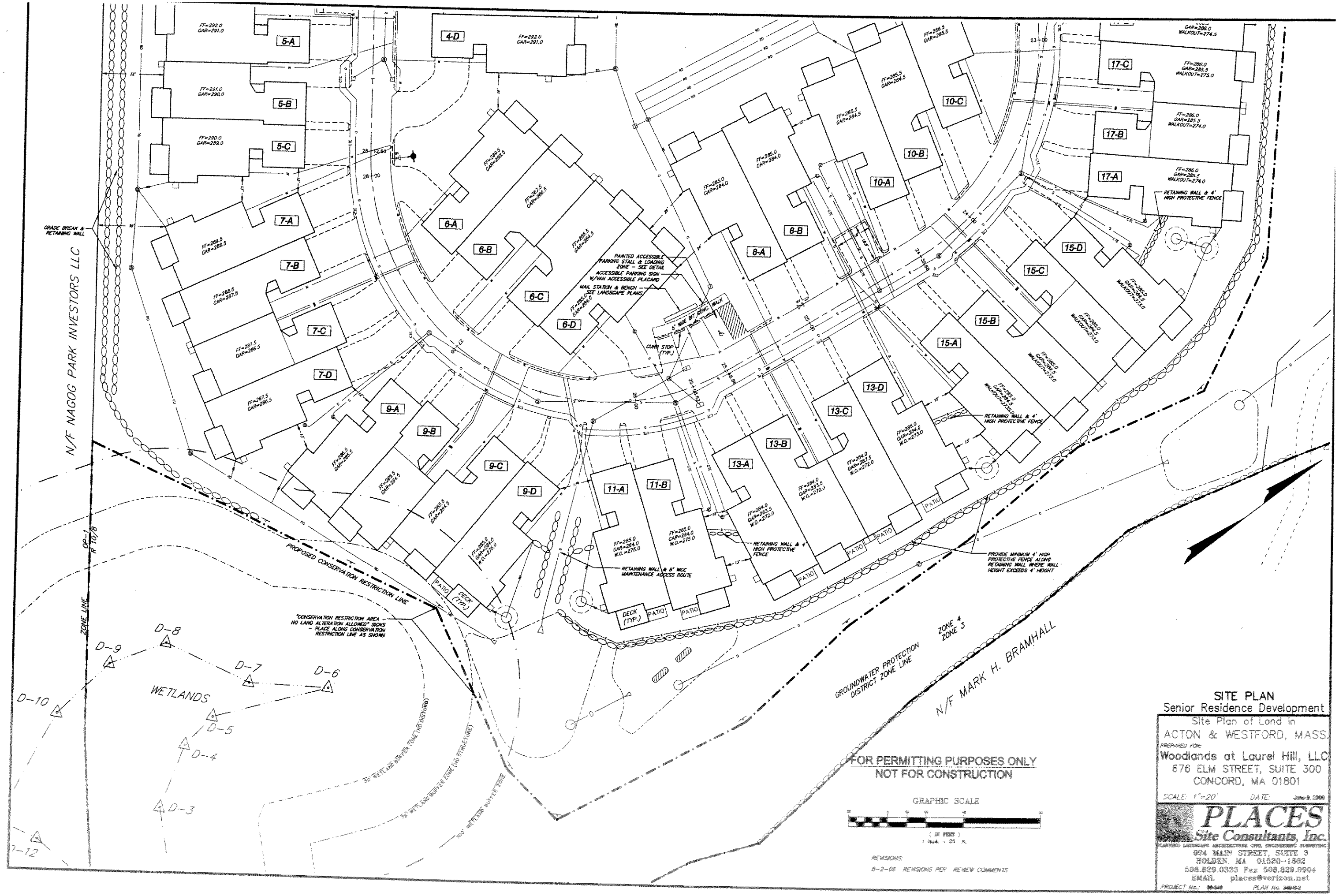

SITE PLAN
Senior Residence Development

Site Plan of Land in
ACTON & WESTFORD, MASS.

PREPARED FOR:
Woodlands at Laurel Hill, LLC
676 ELM STREET, SUITE 300
CONCORD, MA 01801

SCALE: 1"=20' DATE: June 9, 2006

PLACES
Site Consultants, Inc.
PLANNING LANDSCAPE ARCHITECTURE CIVIL ENGINEERING SURVEYING
694 MAIN STREET, SUITE 3
HOLDEN, MA 01520-1862
508.829.0333 Fax 508.829.0904
EMAIL places@verizon.net

PROJECT No.: 06-349 PLAN No. 349-S-2

GRAPHIC SCALE

(IN FEET)
1 inch = 20 ft.

FOR PERMITTING PURPOSES ONLY
NOT FOR CONSTRUCTION

Site Plan of Land in
ACTON & WESTFORD, MASS.

PREPARED FOR:
Woodlands at Laurel Hill, LLC
676 ELM STREET, SUITE 300
CONCORD, MA 01801

SCALE: 1"=20' DATE: June 9, 2006

PLACES
Site Consultants, Inc.
PLANNING LANDSCAPE ARCHITECTURE CIVIL ENGINEERING SURVEYING
694 MAIN STREET, SUITE 3
HOLDEN, MA 01520-1862
508.829.0333 Fax 508.829.0904
EMAIL places@verizon.net

PROJECT No.: 06-349 PLAN No. 349-GD-1

Senior Residence Development
GRADING & DRAINAGE PLAN

PLAN NOTES:

1. ALL PIPE LENGTHS ARE TO BE MEASURED FROM CENTER TO CENTER TO EACH STRUCTURE.
2. SPOT GRADES ARE TO BE BLENDED IN A UNIFORM MANNER TO THE ADJACENT SPOT GRADES OR NEAREST CONTOUR.
3. UNLESS OTHERWISE NOTED, ALL SPOT GRADES ARE BOTTOM OF CURB ELEVATIONS.
4. ALL EXPOSED CURBING SHALL HAVE A 6" EXPOSED HEIGHT.
5. ALL DISTURBED SURFACES ARE TO BE STABILIZED.
6. PRIOR TO THE INITIATION OF ANY SITE RELATED EXPLORATION, GRADING, OR CONSTRUCTION THAT MAY CREATE UNSUITABLE SURFACES, AN EROSION CONTROL BARRIER SHALL BE ERECTED IN THE LOCATION DEPICTED WITHIN THE DRAWING SET. THE INSTALLATION AND CONSTRUCTION SHALL BE APPROVED BY THE LOCAL AUTHORITIES IF REQUIRED.

SEE SHEET GD-2 FOR ADDITIONAL GRADING & DRAINAGE RELATED NOTES.

REVISIONS:

8-2-06 REVISIONS PER REVIEW COMMENTS

N/F NAGOG PARK INVESTORS LLC

TOWN LINE
WESTFORD
ACTON

LOT 3
SEE "THE WOODLANDS AT LAUREL HILL" COMPREHENSIVE PERMIT SITE PLANS

FOR CONTINUATION OF DRAINAGE SYSTEM SEE COMPREHENSIVE PERMIT SITE PLANS

LOT 1

LAUREL HILL DRIVE

RECYCLING CENTER EL=295.6

ACCESSIBLE PARKING & LOADING ZONE - NO SLOPES IN EXCESS OF 12% IN ANY DIRECTION

ROOF DRAIN COLLECTION SYSTEM - SEE DETAILS

3' WIDE x 6" DEEP GRASS LINED SWALE - SEE DETAIL

PROVIDE 6" DEEP SWALES ON NORTHERLY & WESTERLY SIDES OF RECYCLING CENTER

ROOF DRAIN COLLECTION/ DETENTION SYSTEM - SEE DETAILS

ROOF DRAIN RECHARGE STRUCTURES

1-A, 1-B, 1-C, 2-A, 2-B, 2-C, 3-A, 3-B, 3-C, 3-D, 4-A, 4-B, 4-C, 4-D, 5-A, 5-B, 12-A, 12-B, 12-C, 17-B, 17-C, 17-D, 19-A, 19-B, 19-C, 21-A, 21-B, 21-C, 23-A, 23-B, 23-C, 25-A, 25-B, 25-C, 25-D, 10-C

N/F NAGOG PARK INVESTORS LLC

N/F MARK H. BRAMHALL

ROOF DRAIN COLLECTION SYSTEM – SEE DETAILS

ROOF DRAIN COLLECTION/ DETENTION SYSTEM – SEE DETAILS

ACCESSIBLE PARKING & LOADING ZONE – NO SLOPES IN EXCESS OF 2% IN ANY DIRECTION

8' WIDE MAINTENANCE ACCESS ROUTE

ROOF DRAIN RECHARGE STRUCTURE (TYPICAL)
CONCRETE PIER WALL
TOP WALL=275.00
INV. NOTCH=274.33

3' WIDE x 6" DEEP GRASS SWALE – SEE DETAIL

3' WIDE x 1' DEEP RIP RAP LINED SWALE

3' WIDE x 1' DEEP GRASS LINED SWALE

5' WIDE BROAD CRESTED WEIR INV. =270.25

BASIN R OUTLET CONTROL STRUCTURE

5' WIDE BROAD CRESTED WEIR INV. =246.5

PROVIDE RIP RAP AT SWALE & ROOF DRAIN OUTFALL

PROVIDE FOREBAY LINER TO ELEVATION 272.0

OUTLET CONTROL STRUCTURE

40' LONG RECHARGE WEIRS (SEE DETAIL)

BASIN Q OUTLET CONTROL STRUCTURE

50' WETLAND BUFFER ZONE (NO DISTURB)

75' WETLAND BUFFER ZONE (NO STRUCTURES)

100' WETLAND BUFFER ZONE

BASIN Q MAINTENANCE ACCESS ROUTE, 8' WIDE MINIMUM

WETLANDS

ZONE LINE

GROUNDWATER PROTECTION DISTRICT ZONE LINE

ZONE 4 – ZONE 3

PATIO

DECK (TYP.)

GRAPHIC SCALE

(IN FEET)
1 inch = 20 ft.

GRADING & DRAINAGE PLAN
Senior Residence Development

Site Plan of Land in
ACTON & WESTFORD, MASS.

PREPARED FOR:
Woodlands at Laurel Hill, LLC
676 ELM STREET, SUITE 300
CONCORD, MA 01801

SCALE: 1"=20' DATE: June 9, 2006

REVISIONS:
8-2-06 REVISIONS PER REVIEW COMMENTS

PLAN NOTES (CONTINUED):

7. THIS PLAN DEPICTS SITE RELATED GRADING AND DRAINAGE. REFER WITHIN THE PLAN SET FOR LOCATION OF UTILITIES, SITE FEATURES, AND RELATED CONSTRUCTION.

8. ALL SLOPES 2:1 OR STEEPER (HORIZONTAL TO VERTICAL) SHALL RECEIVE EROSION CONTROL NETTING.

9. PIPE SLOPES SHOWN ON THIS PLAN (S=0.XX) INDICATES THE VERTICAL CHANGE PER HORIZONTAL FOOT OF INSTALLED PIPE.

10. ALL RETAINING WALLS IN EXCESS OF 4 FEET IN HEIGHT OR RETAINING WALLS SUBJECT TO A SURCHARGE LOAD SHALL BE DESIGNED BY A MASSACHUSETTS REGISTERED PROFESSIONAL ENGINEER.

FOR PERMITTING PURPOSES ONLY
NOT FOR CONSTRUCTION

PLACES Site Consultants, Inc.
PLANNING LANDSCAPE ARCHITECTURE CIVIL ENGINEERING SURVEYING
694 MAIN STREET, SUITE 3
HOLDEN, MA 01520-1862
508.829.6333 Fax 508.829.6904
EMAIL places@verizon.net

PROJECT No.: 05-349 PLAN No. 349-GD-2

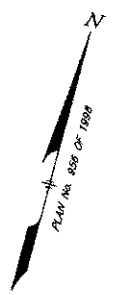

PLAN NOTES:

1. SEE PLAN AND PROFILE PLANS FROM "THE WOODLANDS AT LAUREL HILL COMPREHENSIVE PERMIT" PLAN SET FOR THE CONTINUATION OF LAUREL HILL DRIVE..
2. SEE GRADING AND DRAINAGE PLAN FOR ALL DRAINAGE LINES/STRUCTURES LOCATED OFF THE LOOP ROAD.
3. SEE UTILITY PLANS FOR ADDITIONAL SEWER & OTHER SUB-SURFACE UTILITY DATA.
4. SEE SHEET PP-2 FOR CONTINUATION OF DRAINAGE SCHEDULE FOR LOT 4.

Description		Pipe Data			Vertical Control		
Inlet Structure	Outlet Structure	Length (ft)	Slope (ft/ft)	Size (in)	Invert Elevation Inlet	Invert Elevation Outlet	Rim/Surface Elevation @ Inlet
OUTLET BASIN R	DMH CC1	135	0.037	15	240.00	235.00	246.00
DMH CC1	DMH CC2	140	0.079	15	240.00	229.00	244.50
DMH CC2	FES CC2	37	0.040	15	221.46	220.00	229.00

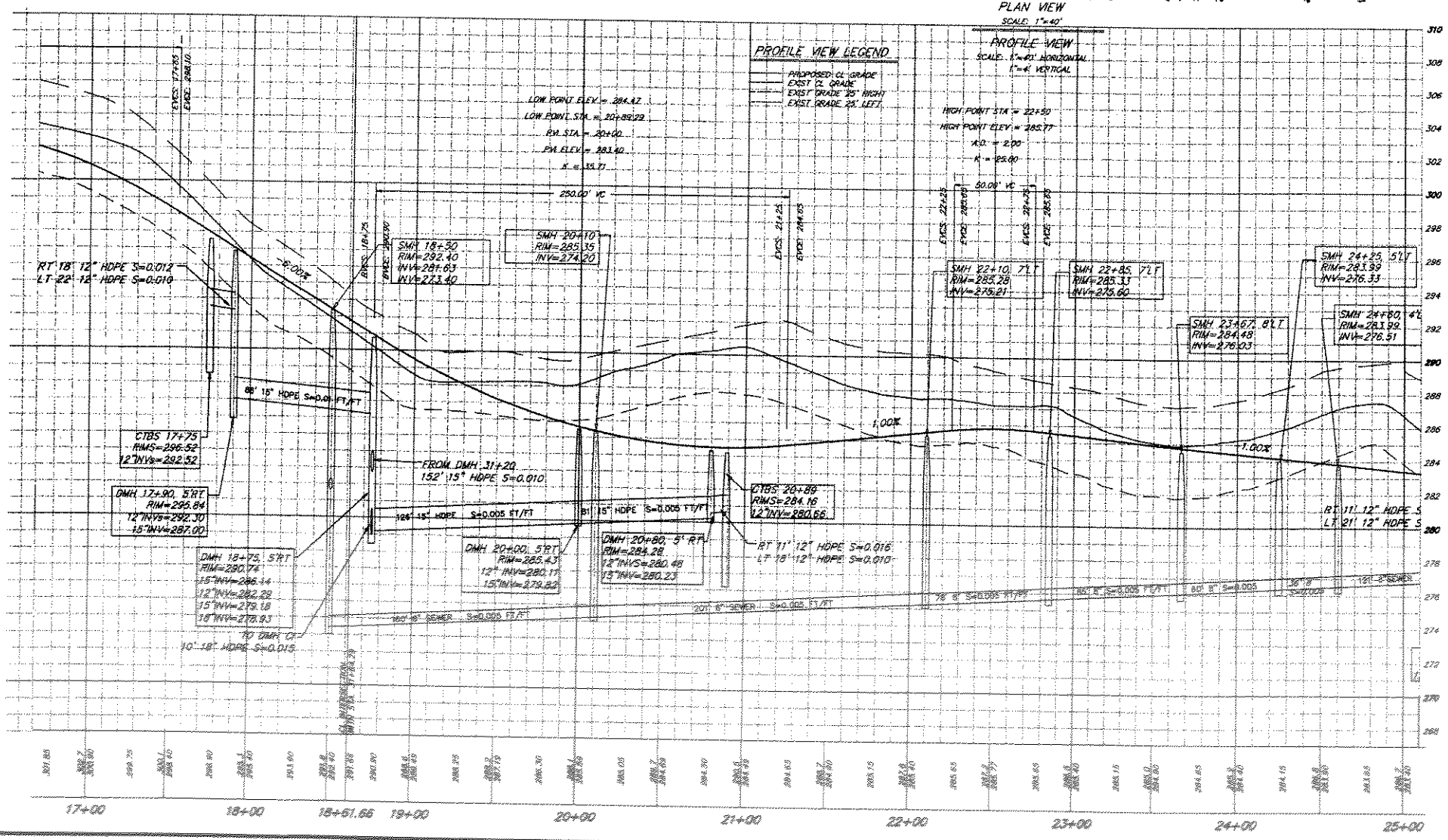

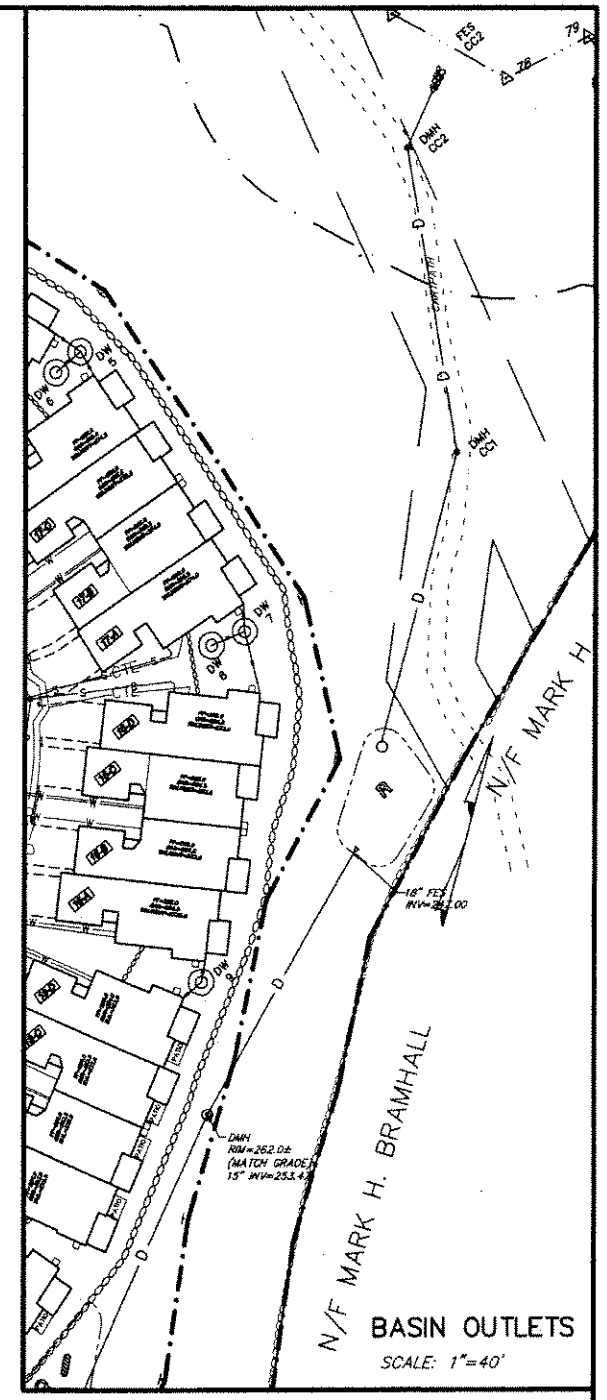

PLAN & PROFILE
Station 18+62 to 25+00
Senior Residence Development

Site Plan of Land in
ACTON & WESTFORD, MASS.

PREPARED FOR:
Woodlands at Laurel Hill, LLC
676 ELM STREET, SUITE 300
CONCORD, MA 01801

SCALE: AS SHOWN DATE: June 9, 2006

PLACES
Site Consultants, Inc.
PLANNING LANDSCAPE ARCHITECTURE CIVIL ENGINEERING SURVEYING
694 MAIN STREET, SUITE 3
HOLDEN, MA 01520-1862
508.829.0333 Fax 508.829.0904
EMAIL places@verizon.net

PROJECT No.: 04-349 PLAN No. 349-PP-1

REVISIONS:
8-2-06 REVISIONS PER REVIEW COMMENTS

FOR PERMITTING PURPOSES ONLY
NOT FOR CONSTRUCTION

PLAN VIEW
SCALE: 1"=40'

REVISIONS:
8-2-06 REVISIONS PER REVIEW COMMENTS

FOR PERMITTING PURPOSES ONLY
NOT FOR CONSTRUCTION

Description		Pipe Data			Vertical Control		
Inlet Structure	Outlet Structure	Length (ft)	Slope (ft/ft)	Size (in)	Invert Elevation Inlet	Invert Elevation Outlet	Rim/Surface Elevation @ Inlet
CTB 28+50 LT	DMH 28+60	19	0.006	12	285.91	285.80	286.91
CTB 28+50 RT	DMH 28+60	11	0.010	12	285.91	285.80	289.91
DMH 28+60	DMH 31+20	258	0.005	12	285.80	284.51	290.41
CTB 31+13 RT	DMH 31+20	10	0.006	12	288.18	288.10	291.86
CTB 31+13 LT	DMH 31+20	15	0.005	12	288.18	288.10	291.86
DMH 31+20	DMH 18+75	152	0.010	15	284.26	282.74	292.01
CTB 17+75 LT	DMH 17+90	22	0.010	12	292.52	292.30	298.52
CTB 17+75 RT	DMH 17+90	18	0.012	12	292.52	292.30	296.52
DMH 17+90	DMH 18+75	86	0.010	15	287.00	288.14	285.84
CTB 20+88 LT	DMH 20+60	18	0.010	12	280.86	280.48	284.16
CTB 20+88 RT	DMH 20+60	11	0.016	12	280.86	280.48	284.16
DMH 20+60	DMH 20+00	81	0.005	15	280.23	279.82	284.28
LCTB 20+25	DMH 20+00	39	0.010	12	280.50	280.11	283.50
DMH 20+00	DMH 18+75	126	0.005	15	279.82	279.18	288.43
DMH 18+75	DMH C1	100	0.015	15	276.93	277.43	290.74
DMH C1	DMH C2	82	0.015	18	277.43	276.20	292.00
DMH C2	DMH C3	126	0.081	15	276.20	265.94	282.50
RD1	RD2	180	0.000	36	278.00	278.00	283.80
RD2	LCTB A	35	0.020	12	278.00	277.30	285.50
RD3	LCTB A	8	0.020	12	277.00	276.84	282.90
LCTB A	LCTB B	91	0.015	12	276.84	275.48	282.85
LCTB B	DMH 25+80	52	0.015	12	275.48	274.70	282.65
DCTB 25+88 LT	DMH 25+80	21	0.020	12	278.62	278.20	282.62
DCTB 25+88 RT	DMH 25+80	11	0.036	12	278.62	278.20	282.62
DMH 25+80	DMH 26+25	45	0.005	18	274.18	273.87	282.70
DMH 26+25	BASIN P	108	0.010	18	273.87	272.89	282.98

PLAN & PROFILE
Station 24+00 to End
Senior Residence Development

Site Plan of Land in
ACTON & WESTFORD, MASS.

PREPARED FOR:
Woodlands at Laurel Hill, LLC
676 ELM STREET, SUITE 300
CONCORD, MA 01801

SCALE: AS SHOWN DATE: June 9, 2006

PLACES Site Consultants, Inc.
PLANNING LANDSCAPE ARCHITECTURE CIVIL ENGINEERING SURVEYING
694 MAIN STREET, SUITE 3
HOLDEN, MA 01520-1862
508.829.0333 Fax 508.829.0904
EMAIL places@verizon.net

PROJECT No.: 04-108 PLAN No. 100-PP-2

GRAPHIC SCALE
(IN FEET)
1 inch = 20 ft

FOR PERMITTING PURPOSES ONLY
NOT FOR CONSTRUCTION

Site Plan of Land in
ACTON & WESTFORD, MASS.

PREPARED FOR:
Woodlands at Laurel Hill, LLC
676 ELM STREET, SUITE 300
CONCORD, MA 01801

SCALE: 1"=20' DATE: June 9, 2006

PLACES
Site Consultants, Inc.
PLANNING LANDSCAPE ARCHITECTURE CIVIL ENGINEERING SURVEYING
694 MAIN STREET, SUITE 3
HOLDEN, MA 01520-1862
508.829.0333 Fax 508.829.0904
EMAIL places@verizon.net

PROJECT No.: 06-349 PLAN No. 349-U-1

Senior Residence Development
UTILITY PLAN

REVISIONS:
8-2-06 REVISIONS PER REVIEW COMMENTS

PLAN NOTES:
1. THE UTILITY PLANS DEPICT THE PROPOSED LAYOUT/IMPROVEMENTS FOR SITE RELATED UTILITIES. SEE OTHER PLAN SHEETS FOR OTHER RELATED IMPROVEMENTS.
2. ALL CONSTRUCTION, MATERIALS AND INSEPCTIONS/TESTING FOR THE SANITARY SEWER COLLECTION SYSTEM SHALL MEET THE REQUIREMENTS OF THE ACTON BOARD OF HEALTH SEWER REGULATIONS, LATEST EDITION.
3. ALL CONSTRUCTION, MATERIALS AND INSPECTIONS/TESTING FOR THE DOMESTIC WATER SYSTEM SHALL MEET THE REQUIREMENTS OF THE ACTON WATER DISTRICT.
4. THE COMMUNICATIONS, ELECTRIC & GAS SERVICE MAINS AND ENTRANCES ARE SHOWN SCHEMATICALLY ONLY. THE CONTRACTOR SHALL COORDINATE THE INSTALLATION OF THESE UTILITIES WITH THE APPROPRIATE UTILITY PROVIDER.
5. EACH BUILDING BLOCK IS TO BE SERVED WITH A SINGLE BUILDING SEWER CONNECTION.
6. EACH DWELLING UNIT SHALL BE SERVED BY AN SEPARATE WATER SERVICE.

LOT 3
SEE "THE WOODLANDS AT LAUREL HILL" COMPREHENSIVE PERMIT SITE PLANS

LOT 1

OP-1
R 10.78

6 CAR GARAGE
FF=292.5

ZONE LINE

LAUREL HILL DRIVE

SMH 101

RECYCLING CENTER
EL.=285.5

6 x 8 TEE, GATE VALVE, FIRE HYDRANT & THRUST BLOCK (SEE DETAIL)

8" DOG WATER MAIN

6 x 8 TEE, GATE VALVES & THRUST BLOCKS

EXTERIOR SEWER CLEANOUT (TYPICAL)

1" DOMESTIC WATER SERVICE CONNECTION (TYPICAL)

1-A: BUILDING SEWER INV. OUT=284.94; FF=293.0 GAR=292.5
1-B: FF=293.5 GAR=293.0
1-C: FF=293.5 GAR=293.0
2-A: FF=293.5 GAR=293.0
2-B: FF=294.0 GAR=293.5
2-C: FF=294.0 GAR=293.5; BUILDING SEWER INV. OUT=281.80
3-A: FF=294.0 GAR=293.5
3-B: FF=294.0 GAR=293.5
3-C: FF=293.5 GAR=293.0
3-D: FF=293.0 GAR=292.5; BUILDING SEWER INV. OUT=285.50
4-A: FF=294.0 GAR=293.5; BUILDING SEWER INV. OUT=285.62
4-B: FF=294.0 GAR=293.5
4-C: FF=293.0 GAR=292.5
4-D: FF=292.0 GAR=291.0
5-A: BUILDING SEWER INV. OUT=285.50; FF=292.0 GAR=291.0
5-B: FF=291.0 GAR=290.0

25-D: FF=289.0 GAR=288.5 WALKOUT=278.0; PROVIDE SEWER CHIMNEY AT BUILDING SEWER CONNECTION FOR BUILDING #2
25-C: FF=288.0 GAR=286.5 WALKOUT=277.0
25-B: FF=287.0 GAR=286.5 WALKOUT=276.0
25-A: BUILDING SEWER INV. OUT=277.00; FF=287.0 GAR=286.5 WALKOUT=275.0
23-C: FF=286.0 GAR=285.5 WALKOUT=274.0
23-B: BUILDING SEWER INV. OUT=277.25; FF=286.0 GAR=285.5 WALKOUT=274.0
23-A: FF=286.0 GAR=285.5 WALKOUT=274.0
21-C: FF=285.5 GAR=285.0 WALKOUT=273.5
21-B: BUILDING SEWER INV. OUT=278.07; FF=285.5 GAR=285.0 WALKOUT=273.5
21-A: BUILDING SEWER INV. OUT=278.21; FF=286.5 GAR=286.0 WALKOUT=274.5
19-C: FF=286.5 GAR=286.0 WALKOUT=274.5
19-B: FF=286.5 GAR=286.0 WALKOUT=274.5
19-A: FF=286.5 GAR=286.0 WALKOUT=274.5
17-D: FF=286.5 GAR=286.0 WALKOUT=274.5
17-C: FF=286.0 GAR=285.5 WALKOUT=273.0
17-B: FF=286.0 GAR=285.5 WALKOUT=274.0
12-C: FF=286.5 GAR=285.5
12-B: FF=286.5 GAR=285.5
12-A: FF=286.5 GAR=285.5
10-C: FF=286.5 GAR=285.5
10-B: FF=286.5 GAR=285.5; BUILDING SEWER INV. OUT=276.52

BUILDING SEWER INV. OUT=277.45

6 x 8 TEE, GATE VALVE, FIRE HYDRANT & THRUST BLOCK (SEE DETAIL)

100' WETLAND BUFFER ZONE

TOWN LINE

WESTFORD

ACTON

N/F NAGOG PARK INVESTORS LLC

BOUNDARY DIST

N/F NAGOG PARK INVESTORS LLC

OP-1
A 10/8

ZONE LINE

BUILDING SEWER INV. OUT=285.50
FF=292.0
GAR=291.0

5-A
5-B
5-C
FF=291.0 GAR=290.0
FF=290.0 GAR=289.0

1" DOMESTIC WATER SERVICE CONNECTION (TYPICAL)

4-D
FF=292.0 GAR=291.0

6" x 6" TEE, GATE VALVE, FIRE HYDRANT & THRUST BLOCK (SEE DETAIL)

7-A
7-B
7-C
7-D
FF=289.5 GAR=288.5
FF=288.5 GAR=287.5
FF=287.5 GAR=286.5
FF=287.5 GAR=286.5

BUILDING SEWER INV. OUT=280.54

6-A
6-B
6-C
6-D
FF=289.5 GAR=288.5
FF=287.5 GAR=286.5
FF=285.5 GAR=284.5
FF=286.0 GAR=284.0

EXTERIOR SEWER CLEANOUT (TYPICAL)

BUILDING SEWER INV. OUT=279.68

9-A
9-B
9-C
9-D
BUILDING SEWER INV. OUT=280.28
FF=285.5 GAR=284.5
FF=285.5 GAR=284.5
FF=285.5 GAR=284.5
FF=285.0 GAR=284.0 W.O.=275.0

11-A
11-B
FF=285.0 GAR=284.0 W.O.=275.0
FF=285.0 GAR=284.0 W.O.=275.0

BUILDING SEWER INV. OUT=279.92

DECK (TYP.)
PATIO
PATIO
DECK (TYP.)
PATIO

8-A
8-B
FF=285.0 GAR=284.0
FF=285.0 GAR=284.0

BUILDING SEWER INV. OUT=279.42

8" GATE VALVE

10-A
10-B
10-C
FF=285.5 GAR=284.5
FF=285.5 GAR=284.5
FF=286.5 GAR=285.5

8" DICL WATER MAIN

13-A
13-B
13-C
13-D
FF=284.0 GAR=283.5 W.O.=272.0
FF=284.0 GAR=283.5 W.O.=272.0
FF=285.0 GAR=284.0 W.O.=275.0

BUILDING SEWER INV. OUT=280.02

PATIO
PATIO
PATIO
PATIO

17-A
17-B
17-C
FF=286.0 GAR=285.5 WALKOUT=274.0
FF=286.0 GAR=285.5 WALKOUT=274.0
FF=286.0 GAR=285.5 WALKOUT=275.0
GAR=286.0 WALKOUT=274.5

BUILDING SEWER INV. OUT=279.03

15-A
15-B
15-C
15-D
FF=285.0 GAR=284.0 WALKOUT=273.0
FF=285.0 GAR=284.0 WALKOUT=273.0
FF=286.0 GAR=285.5 WALKOUT=274.0

BUILDING SEWER INV. OUT=279.03

GROUNDWATER PROTECTION DISTRICT ZONE LINE

ZONE 4
ZONE 3

N/F MARK H. BRAMHALL

D-1
D-2
D-3
D-4
D-5
D-6
D-7
D-8
D-9
D-10

WETLANDS

50' WETLAND BUFFER ZONE (NO DISTURB)
75' WETLAND BUFFER ZONE (NO STRUCTURE)
100' WETLAND BUFFER ZONE

FOR PERMITTING PURPOSES ONLY
NOT FOR CONSTRUCTION

GRAPHIC SCALE

(IN FEET)
1 inch = 20 ft.

REVISIONS:
8-2-06 REVISIONS PER REVIEW COMMENTS

UTILITY PLAN
Senior Residence Development

Site Plan of Land in
ACTON & WESTFORD, MASS.

PREPARED FOR:
Woodlands at Laurel Hill, LLC
676 ELM STREET, SUITE 300
CONCORD, MA 01801

SCALE: 1"=20' DATE: June 9, 2006

PLACES
Site Consultants, Inc.
PLANNING LANDSCAPE ARCHITECTURE CIVIL ENGINEERING SURVEYING
694 MAIN STREET, SUITE 3
HOLDEN, MA 01520-1862
508.829.0333 Fax 508.829.0904
EMAIL places@verizon.net

PROJECT No.: 06-349 PLAN No. 349U-2

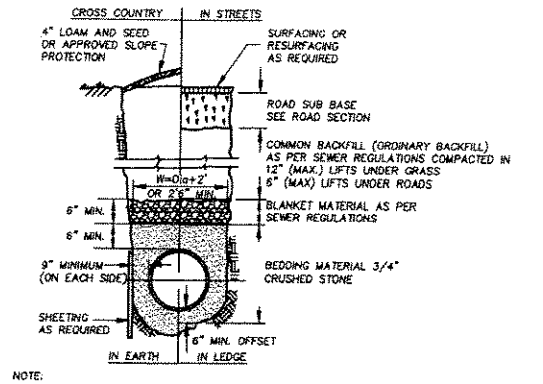

NOTE:
1. BOTH THE BEDDING AND BLANKET MATERIAL SHALL BE COMPACTED IN 6" LOOSE LIFTS TO 90% MAXIMUM DRY DENSITY PER THE MODIFIED PROCTOR TEST.
2. ALL UNSUITABLE MATERIAL SHALL BE REMOVED AND REPLACED WITH GRAVEL OR OTHER SUITABLE MATERIAL COMPACTED TO 90% MAXIMUM DENSITY (MODIFIED PROCTOR).

TYPICAL SEWER TRENCH
NOT TO SCALE

NOTES:

1. ROADWAY PATCH AND BASE/SUB-BASE SHALL BE INSTALLED AS DIRECTED BY THE DPW REGULATIONS.
2. BEDDING, BLANKET, & BACKFILL MATERIALS SHALL BE COMPACTED TO 90% MAXIMUM DENSITY (MODIFIED PROCTOR) AT OPTIMUM MOISTURE CONTENT FOR BOTH CROSS COUNTRY AND ROADWAY INSTALLATION.
3. ALL MATERIALS, INSTALLATION TECHNIQUES, PROCEDURES, INSPECTIONS, AND TESTING SHALL BE IN COMPLIANCE WITH THE REQUIREMENTS OF THE SEWER RULES AND REGULATIONS UNLESS OTHERWISE APPROVED BY THE SEWER SUPERINTENDENT IN WRITING.

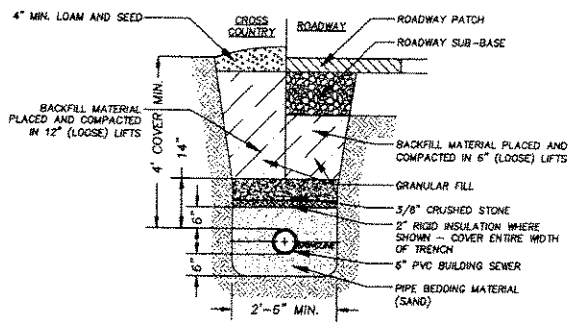

BUILDING SEWER TRENCH
NOT TO SCALE

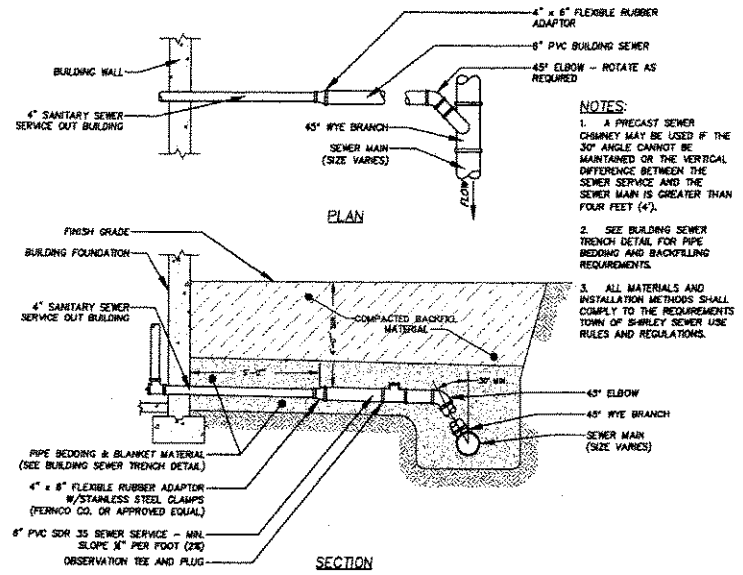

NOTES:
1. A PRECAST SEWER CHIMNEY MAY BE USED IF THE 30" ANGLE CANNOT BE MAINTAINED OR THE VERTICAL DIFFERENCE BETWEEN THE SEWER SERVICE AND THE SEWER MAIN IS GREATER THAN FOUR FEET (4').
2. SEE BUILDING SEWER TRENCH DETAIL FOR PIPE BEDDING AND BACKFILLING REQUIREMENTS.
3. ALL MATERIALS AND INSTALLATION METHODS SHALL COMPLY TO THE REQUIREMENTS TOWN OF SHIRLEY SEWER USE RULES AND REGULATIONS.

BUILDING SEWER CONNECTION
NOT TO SCALE

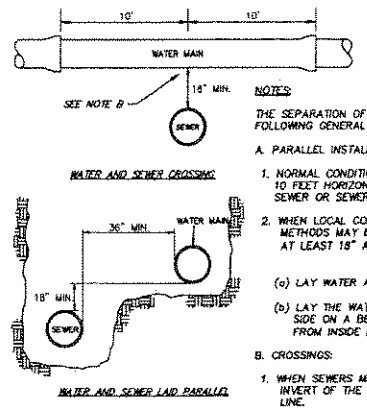

NOTES:

THE SEPARATION OF WATER MAINS AND SEWERS SHALL COMPLY WITH THE FOLLOWING GENERAL REQUIREMENTS.

A. PARALLEL INSTALLATION:
1. NORMAL CONDITIONS: THE INSIDE EDGE OF A WATER MAIN SHALL BE LAID AT LEAST 10 FEET HORIZONTALLY FROM THE INSIDE EDGE OF ANY SANITARY SEWER, STORM SEWER OR SEWER MANHOLE.
2. WHEN LOCAL CONDITIONS PREVENT A HORIZONTAL SEPARATION OF 10 FEET, ONE OF TWO METHODS MAY BE EMPLOYED. IN BOTH CASES THE INVERT OF THE WATER LINE MUST BE AT LEAST 18" ABOVE THE CROWN OF THE SEWER LINE.
   (a) LAY WATER AND SEWER IN SEPARATE TRENCHES
   (b) LAY THE WATER AND SEWER IN THE SAME TRENCH WITH THE WATER MAIN AT ONE SIDE ON A BENCH OF UNDISTURBED EARTH WITH A MINIMUM HORIZONTAL SEPARATION FROM INSIDE PIPE TO INSIDE PIPE OF 36"

B. CROSSINGS:
1. WHEN SEWERS MUST CROSS UNDER WATER MAINS, THE SEWER LAID SUCH THAT THE INVERT OF THE WATER LINE IS AT LEAST 18 INCHES ABOVE THE CROWN OF THE SEWER LINE.
2. WHEN THE SEWER ELEVATION CANNOT BE VARIED TO MEET THE REQUIREMENT, THE WATER LINE MUST BE RELOCATED OR RECONSTRUCTED WITH MECHANICAL JOINT CEMENT LINED DUCTILE IRON PIPE FOR A DISTANCE OF 10 ft ON EACH SIDE OF THE SEWER.
3. WHEN IT IS IMPOSSIBLE TO OBTAIN EITHER OR BOTH OF THE ABOVE REQUIREMENTS, BOTH THE WATER AND SEWER LINES SHALL BE CONSTRUCTED OF MECHANICAL JOINT CEMENT LINED DUCTILE IRON PIPE OR OTHER EQUIVALENT MATERIAL. BOTH PIPES SHALL BE PRESSURE TESTED BY AN APPROVED METHOD TO ASSURE WATER TIGHTNESS OR BOTH PIPES SHALL BE ENCASED IN CONCRETE.

SEWER AND WATER IN SAME TRENCH/CROSSING
NOT TO SCALE

FOR BOTH MANHOLE TYPES NOTES:

1. CONCRETE: 4,000 PSI MINIMUM AFTER 28 DAYS.
2. REINFORCED STEEL CONFORMS TO LATEST ASTM A185 SPEC. 0.12 SQ. IN./LINEAR FT. AND 0.12 SQ. IN. (BOTH WAYS) BASE BOTTOM.
3. H-20 DESIGN LOADING PER AASHTO HS-20-44; ASTM C478 SPEC FOR "PRECAST REINFORCED CONCRETE MANHOLE SECTIONS."
4. WATERTIGHT JOINT USING AN APPROVED MASTIC TYPE SEALANT OR O-RING GASKET (EXTERIOR OF ALL JOINTS SHALL BE REGGATED WITH ASPHALTIC WATER PROOFING AFTER SETTING)
5. STEEL REINFORCED COPOLYMER POLYPROPYLENE PLASTIC STEP CONFORMS TO LATEST ASTM C478 SPEC.
6. WHEN MANHOLES ARE LESS THAN 8' DEEP USE FLAT TOP SLAB IN LIEU OF ECCENTRIC CONE SECTION.

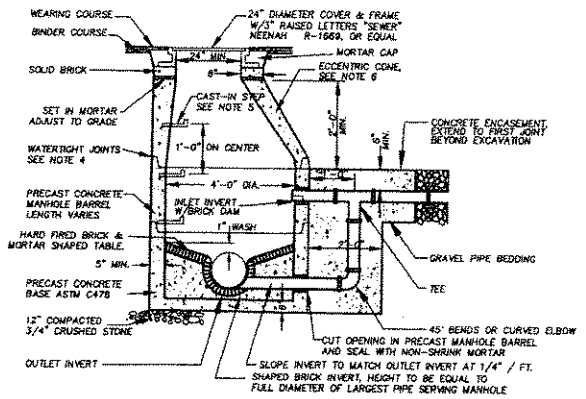

DROP SEWER MANHOLE DETAIL
NOT TO SCALE

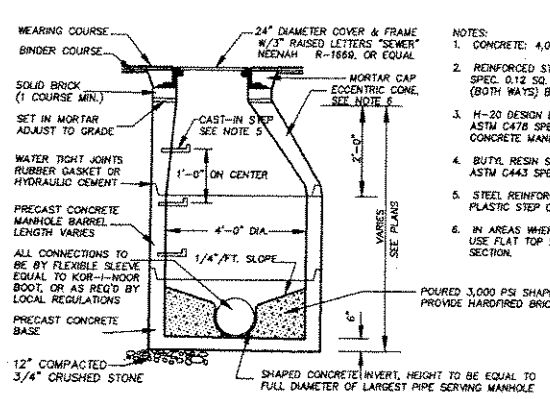

NOTES:
1. CONCRETE: 4,000 PSI MINIMUM AFTER 28 DAYS.
2. REINFORCED STEEL CONFORMS TO LATEST ASTM A185 SPEC. 0.12 SQ. IN./LINEAL FT. AND 0.12 SQ. IN. (BOTH WAYS) BASE BOTTOM.
3. H-20 DESIGN LOADING PER AASHTO HS-20-44; ASTM C478 SPEC FOR "PRECAST REINFORCED CONCRETE MANHOLE SECTIONS."
4. BUTYL RESIN SECTION JOINT CONFORMS TO LATEST ASTM C443 SPEC.
5. STEEL REINFORCED COPOLYMER POLYPROPYLENE PLASTIC STEP CONFORMS TO LATEST ASTM C478 SPEC.
6. IN AREAS WHERE COVER IS 3' OR LESS ABOVE PIPES, USE FLAT TOP SLAB IN LIEU OF ECCENTRIC CONE SECTION.

POURED 3,000 PSI SHAPED CONCRETE TABLE OR PROVIDE HARDFIRED BRICK & MORTAR SHAPED TABLE.

SEWER MANHOLE DETAIL
NOT TO SCALE

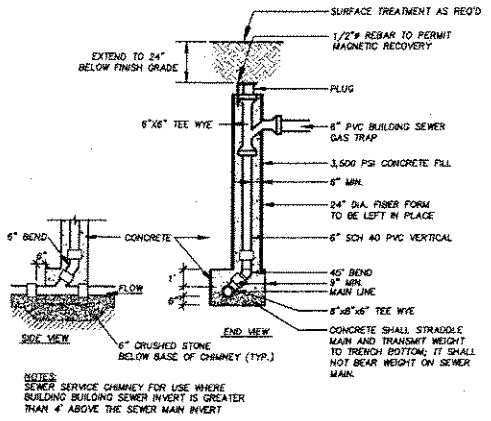

NOTES:
SEWER SERVICE CHIMNEY FOR USE WHERE BUILDING BUILDING SEWER INVERT IS GREATER THAN 4' ABOVE THE SEWER MAIN INVERT

SEWER SERVICE CHIMNEY
NOT TO SCALE

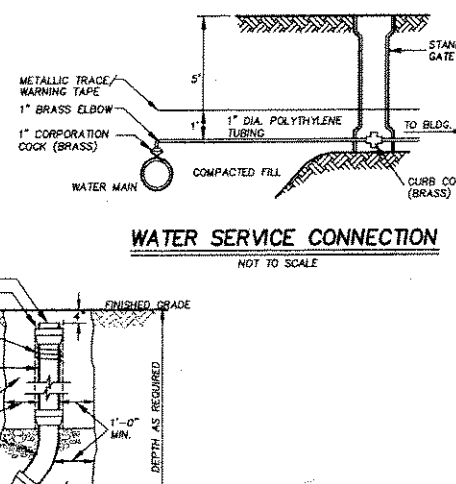

WATER SERVICE CONNECTION
NOT TO SCALE

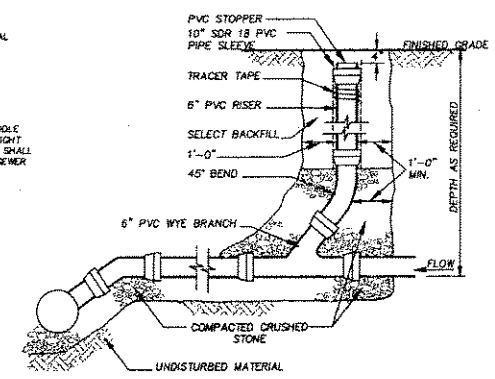

SEWER SERVICE CLEANOUT
NOT TO SCALE

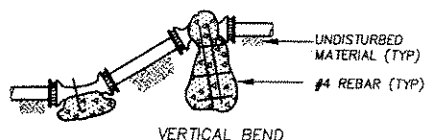

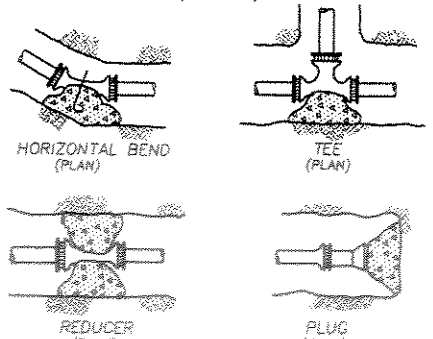

AREA OF BEARING FACE OF CONCRETE THRUST BLOCKS IN SQUARE FEET BASED ON 250 P.S.I. & 1.5 TONS/S.F. ALLOWABLE SOIL BEARING CAPACITY

PIPE SIZE (M.)	1/4 BEND	1/8 BEND	1/16 BEND	PLUG & TEES
4,6,8	6.0	2.9	2.3	4.5
10	9.6	5.2	2.3	6.7
12	13.3	6.7	3.7	9.6
16	24.0	11.8	3.7	17.0

NORMAL FITTING DIAMETER	BEARING AREA - SQ. FT. FITTING				
	90° BEND	45° BEND	BETWEEN 10°-45°	BRANCH OF TEE	DEAD END
6"	4	2	2	4	4
8"	7	4	3	5	5

1. ALL BENDS, TEES, WYES, HYDRANTS AND DEAD ENDS SHALL BE BRACED WITH CONCRETE THRUST BLOCKS.
2. BEARING AREA (H X L) IS AREA OF CONE IN CONTACT WITH WALL OF TRENCH.
3. HEIGHT (H) & LENGTH (L) AS REQUIRED TO OBTAIN BEARING AREA IN TABLE.
4. BOULDERS ARE NOT TO BE USED AS THRUST BLOCKS.

THRUST BLOCK DETAILS
NOT TO SCALE

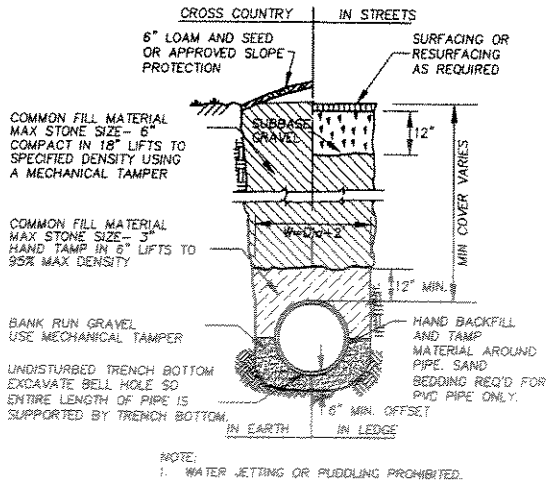

NOTE:
1. WATER JETTING OR PUDDLING PROHIBITED.

TYPICAL WATER MAIN TRENCH
NOT TO SCALE

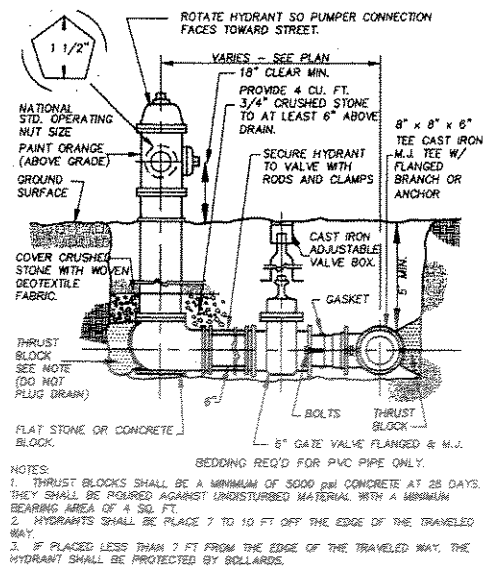

NOTES:
1. THRUST BLOCKS SHALL BE A MINIMUM OF 3000 psi CONCRETE AT 28 DAYS. THEY SHALL BE POURED AGAINST UNDISTURBED MATERIAL WITH A MINIMUM BEARING AREA OF 4 SQ. FT.
2. HYDRANTS SHALL BE PLACE 7 TO 10 FT OFF THE EDGE OF THE TRAVELED WAY.
3. IF PLACED LESS THAN 7 FT FROM THE EDGE OF THE TRAVELED WAY, THE HYDRANT SHALL BE PROTECTED BY BOLLARDS.

TYPICAL HYDRANT AND VALVE
NOT TO SCALE

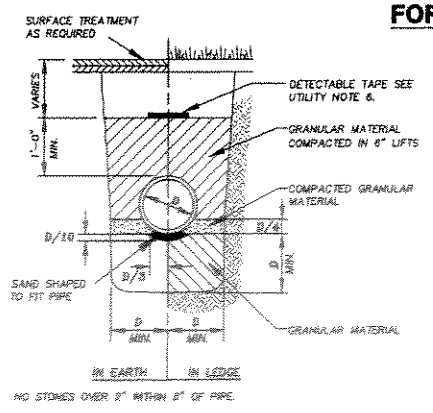

NO STONES OVER 2" WITHIN 8" OF PIPE.

UTILITY TRENCH DETAIL
NOT TO SCALE

REVISIONS:
5-2-06 REVISIONS PER REVIEW COMMENTS

FOR PERMITTING PURPOSES ONLY
NOT FOR CONSTRUCTION

SEWER DETAILS
Senior Residence Development
40B Development Plan in
ACTON & WESTFORD, MASS.
PREPARED FOR:
Woodlands at Laurel Hill, LLC
676 ELM STREET, SUITE 300
CONCORD, MA 01801
SCALE: AS SHOWN DATE: June 9, 2006

PLACES Site Consultants, Inc.
PLANNING LANDSCAPE ARCHITECTURE CIVIL ENGINEERING SURVEYING
694 MAIN STREET, SUITE 3
HOLDEN, MA 01520-1882
508.829.0333 Fax 508.829.0904
EMAIL places@verizon.net

PROJECT No.: 05-348 PLAN No. 348-D-1

SCHEDULE OF ELEVATIONS
ROOF DRAINAGE SYSTEM

Description		Horizontal Orifice		Vertical Orifice		Discharge Pipe Data			Invert Elevations		Outlet Structure
Structure	Rim Elevation	SIZE (inches)	INVERT ELEV.	SIZE (inches)	INVERT ELEV.	Length (ft)	Slope (ft/ft)	Size (in)	Inlet	Outlet	
RD1	283.80					160	0.000	36	278.00	278.00	RD 2
RD2	285.80	12.00	280.90	2.00	278.60	36	0.020	12	278.00	277.30	LCTB A
RD3	282.90	12.00	279.90	2.00	277.60	8	0.020	12	277.00	276.84	LCTB A
						4 pipes	107	0.0	36	277.00	277.00	Storage
LCTB A	282.55						91	0.015	12	276.64	275.48	LCTB B
RD 10	292.30						200	0.000	36	285.00	285.00	RD 11
RD 11	291.50	12.0	287.90	2.0	285.00		21	0.020	12	285.00	284.58	RD 12
RD 12	291.00						100	0.000	36	282.00	282.00	RD 13
RD 13	286.30	12.0	284.80	2.0	282.00		40	0.054	12	282.00	279.84	RD 14
RD 14	286.70						100	0.000	36	279.00	279.00	RD 15
RD 15	285.00	12.0	281.90	2.0	279.00	186	0.032	12	279.00	273.06	BASIN P FES

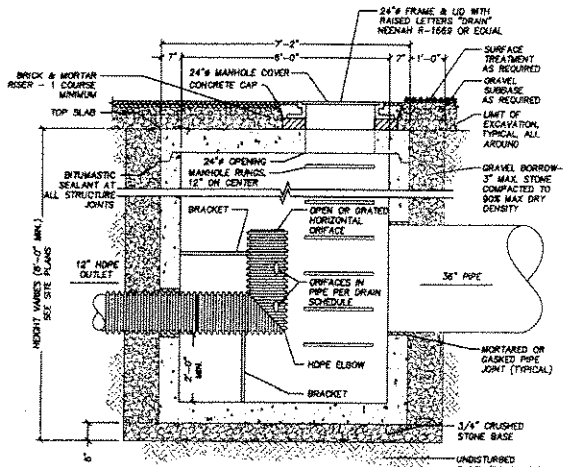

NOTE:
1. STRUCTURE SHALL BE PRE-CAST CONCRETE WITH A MINIMUM 4,000 PSI CONCRETE MIX.
2. ALL STRUCTURE PENETRATIONS SHALL BE "CAST IN" AT THE MANUFACTURER'S PLANT.
3. THE MANUFACTURER SHALL CERTIFY THAT THE STRUCTURE IS CAPABLE OF SUPPORTING AN AASHTO H5-20-44 LOADING.
4. THE MANUFACTURER SHALL CERTIFY THE STRUCTURE MEETS THE REQUIREMENTS OF ASTM C478-PRECAST REINFORCED CONCRETE MANHOLE SECTIONS.
5. BRACKETS & PRE-SUPPORT HARDWARE SHALL BE GALVANIZED STEEL. FASTENERS SHALL BE GALVANIZED OR STAINLESS STEEL.

ROOF DRAIN DETENTION MANHOLE
NOT TO SCALE

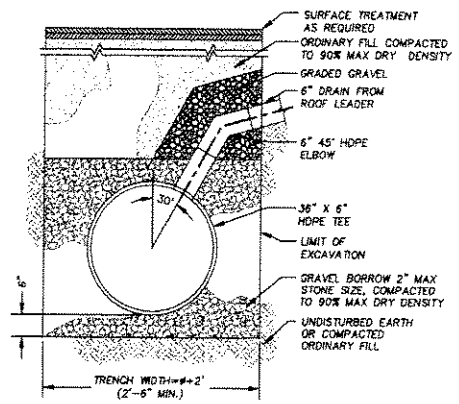

ROOF DRAIN LATERAL CONNECTION
NOT TO SCALE

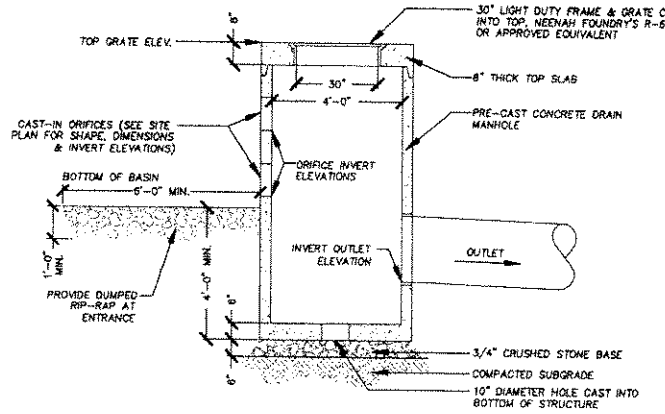

OUTLET CONTROL STRUCTURE
NOT TO SCALE

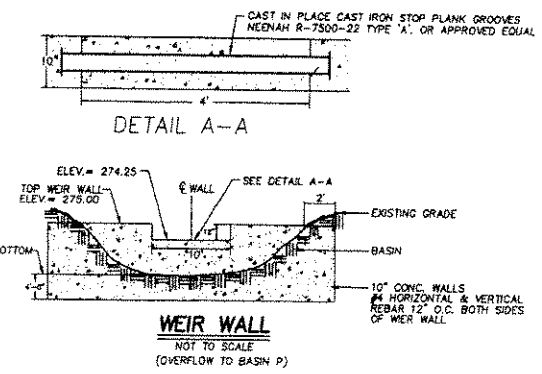

WEIR WALL
NOT TO SCALE
(OVERFLOW TO BASIN P)

DETENTION BASIN OUTLET STRUCTURE SCHEDULE OF ELEVATIONS

BASIN	Vertical Orifices			Horizontal Grate		Overflow Weir			Discharge Pipe					
	Number	Diameter	Invert Elev.	Dimensions	Elev.	Width	Elevation Weir	Top Berm	Number	Length (ft)	Slope (ft/ft)	Size (in)	Invert Elevation	
													Inlet	Outlet
O	1	5"	227.25	30"	232.00	10'	232.25	233.5	2	65	0.020	15	227.03	225.73
	1	0.37'x1.0'	230.00											
P	2	8"	271.25	2'X2'	274.00	10'	274.25	275		40	0.050	18	270.00	268.00
	3	6"	272.82											
Q	2	8"	267.25	2'X2'	269.75	5'	270.25	271.5		267	0.060	18	260.00	243.98
	3	6"	268.00											
R	2	10"	245.25	2'X2'	246.00	6	246.50	247.5		135	0.037	15	240.00	235.00

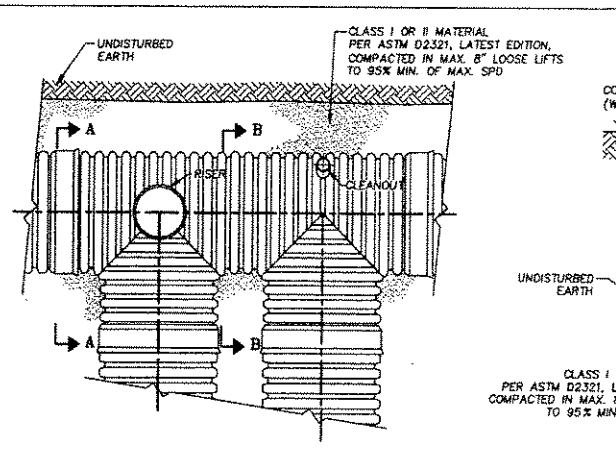

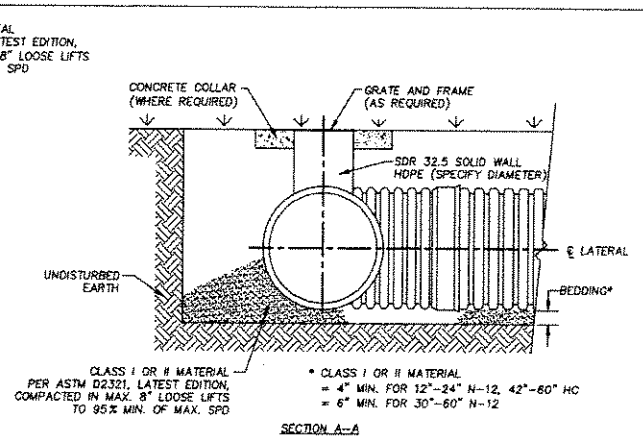

SECTION A-A

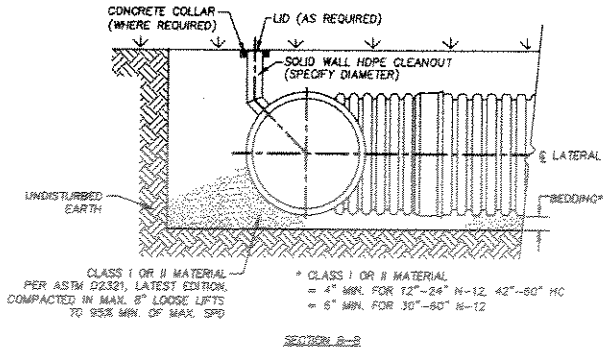

SECTION B-B

TYPICAL RISER & CLEANOUT DETAILS
NOT TO SCALE

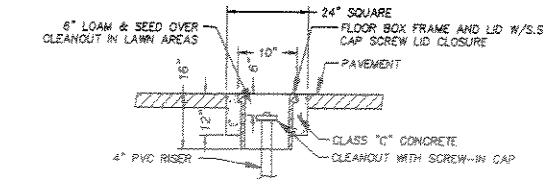

PROVIDE ONE INSPECTION PORT AT EVERY CORNER OF ALL RECHARGE AREAS

INSPECTION PORT/CLEANOUT DETAIL
NOT TO SCALE

ROOF DRAIN RETENTION SYSTEM DETAILS
NOT TO SCALE

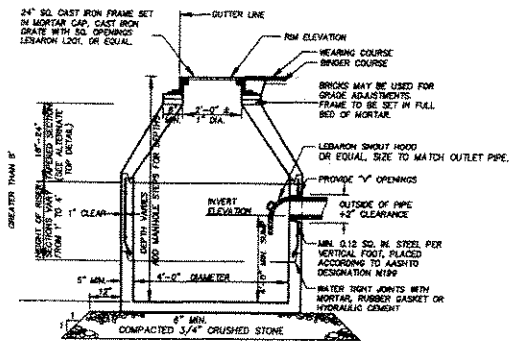

PRECAST CONCRETE CATCHBASIN
NOT TO SCALE

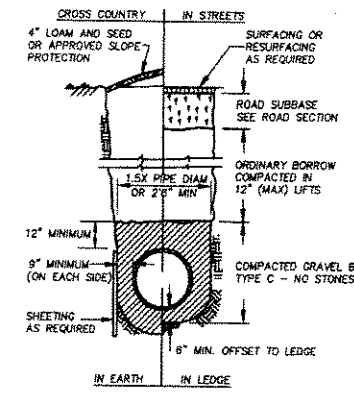

DRAINAGE TRENCH
NOT TO SCALE

NOTE: ALL PIPES TO BE SMOOTH INTERIOR HDPE WITH THE EXCEPTION OF: 18" CORRUGATED HDPE DMH 26+25 TO FES POND P, DMH 25+80 TO DMH 26+25
15" CORRUGATED HDPE OUTLET BASIN R TO DMH CC1, DMH CC1 TO DMH CC2, DMH CC2 TO FES CC2, DMH C2 TO DMH C3, DMH C3 TO DMH C6

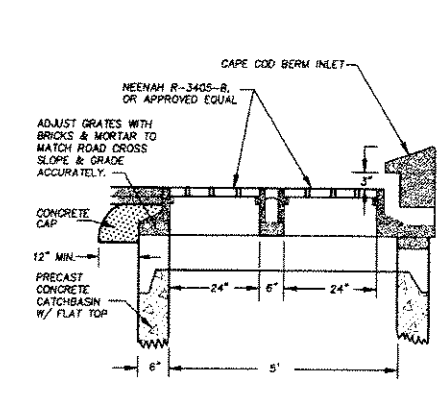

DOUBLE CATCHBASIN DETAIL
NOT TO SCALE

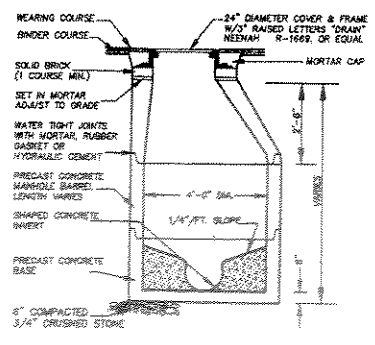

DRAIN MANHOLE DETAIL
NOT TO SCALE

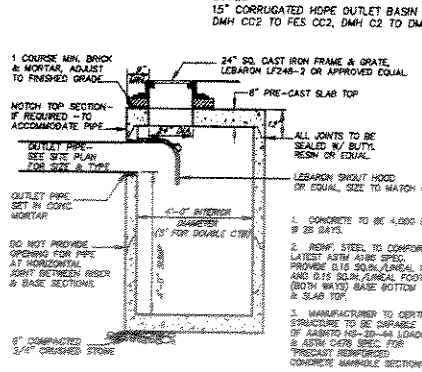

PRECAST FLAT TOP CATCHBASIN
NOT TO SCALE - FOR USE WHERE COVER OVER TOP PIPE IS LESS THAN 3'

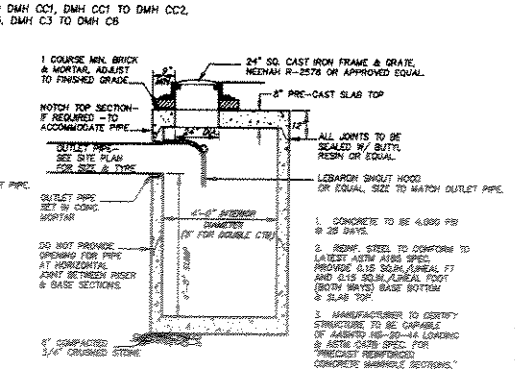

LANDSCAPED CATCHBASIN
NOT TO SCALE

FOR PERMITTING PURPOSES ONLY
NOT FOR CONSTRUCTION

REVISIONS:
8-2-06 REVISIONS PER REVIEW COMMENTS

DRAINAGE DETAILS
Senior Residence Development

40B Development Plan in
ACTON & WESTFORD, MASS.

PREPARED FOR:
Woodlands at Laurel Hill, LLC
676 ELM STREET, SUITE 300
CONCORD, MA 01801

SCALE: AS SHOWN DATE: June 8, 2006

PLACES Site Consultants, Inc.
PLANNING LANDSCAPE ARCHITECTURE CIVIL ENGINEERING SURVEYING
894 MAIN STREET, SUITE 3
HOLDEN, MA 01520-1862
508.829.0333 Fax 508.829.0904
EMAIL places@verizon.net

PROJECT No.: 06-349 PLAN No. 349-D-2

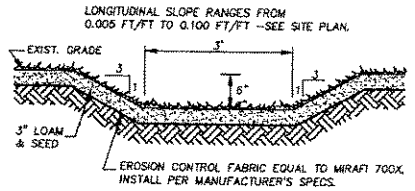

GRASSED SWALE

NOT TO SCALE

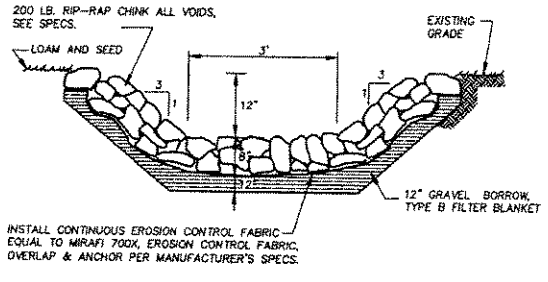

REINFORCED RIP-RAP SWALE

NOT TO SCALE

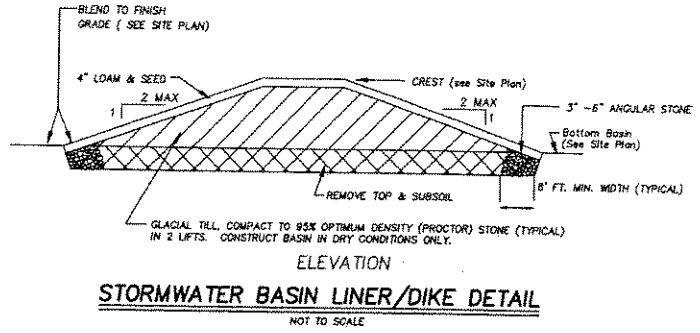

ELEVATION

STORMWATER BASIN LINER/DIKE DETAIL

NOT TO SCALE

200LB. RIP-RAP SPECIFICATIONS:

1. ALL STONE SHALL BE CLEAN DURABLE ANGULAR STONE MEETING THE FOLLOWING SPECIFICATIONS:

STONE SIZE	% OF WEIGHT SMALLER THAN GIVEN SIZE
200 LB.	100%
100 LB.	75%
75 LB.	50%
50 LB.	25%
10 LB.	10%

ROUNDED STONES, BOULDERS, SANDSTONE OR SIMILAR STONE OR RELATIVELY THIN SLAB SHALL NOT BE ACCEPTABLE.

2. THE RIP-RAP SHALL BE UNDERLAYED WITH A FILTER BLANKET CONSISTING OF CLEAN, COARSE GRAVEL WITH NO STONES OVER 4" IN LONGEST DIMENSION AND NO FEWER THAN 10% OF TOTAL VOLUME PASSING A 200# SIEVE.
3. THE FILTER BLANKET NEED NOT BE COMPACTED, BUT SHALL BE GRADED TO A UNIFORM THICKNESS OF 12".
4. THE FILTER BLANKET SHALL BE OVERLAYED WITH A STRUCTURAL/EROSION CONTROL FABRIC OF THE TYPE SPECIFIED. SUCH FABRIC SHALL BE CONTINUOUS IN LENGTHS, EITHER PARALLEL OR PERPENDICULAR TO THE SLOPE AND MUST BE UNDER ALL RIP-RAPPED SURFACES.

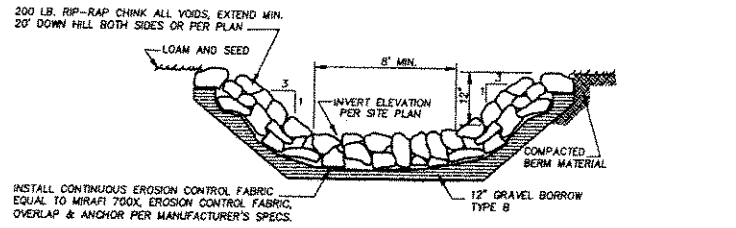

REINFORCED OVERFLOW BROAD-CRESTED WEIR

NOT TO SCALE

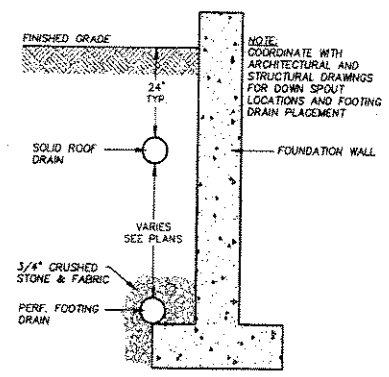

TYPICAL ROOF / FOOTING DRAIN CROSS SECTION

NOT TO SCALE

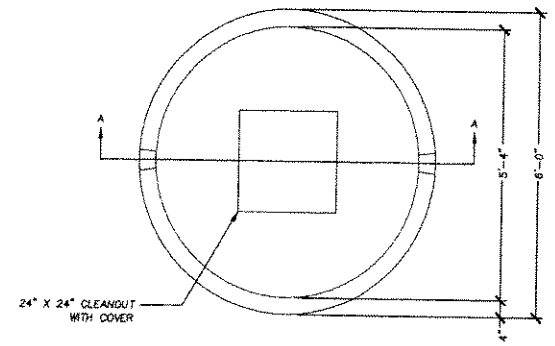

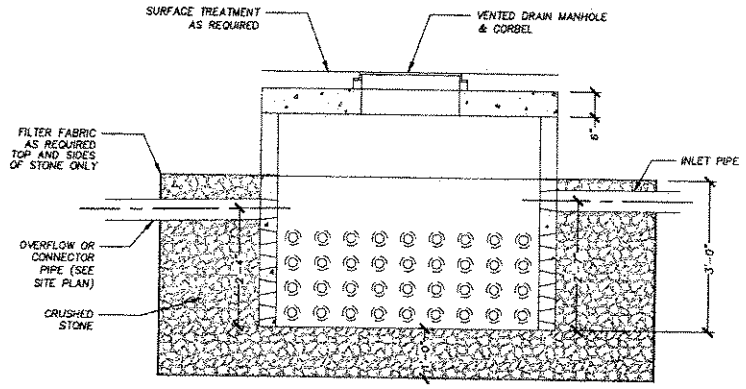

ROOF DRAIN LEACHING PIT

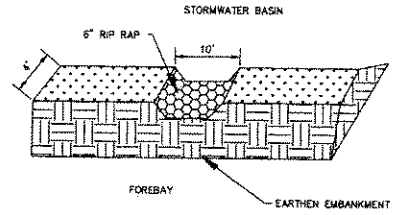

FOREBAY OVERFLOW

NOT TO SCALE

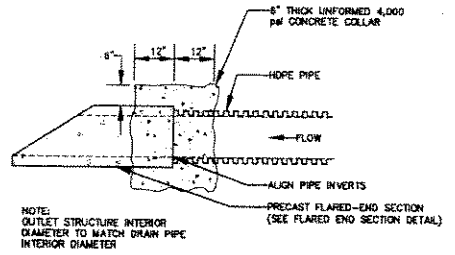

FLARED END SECTION/HDPE PIPE CONNECTION

NOT TO SCALE

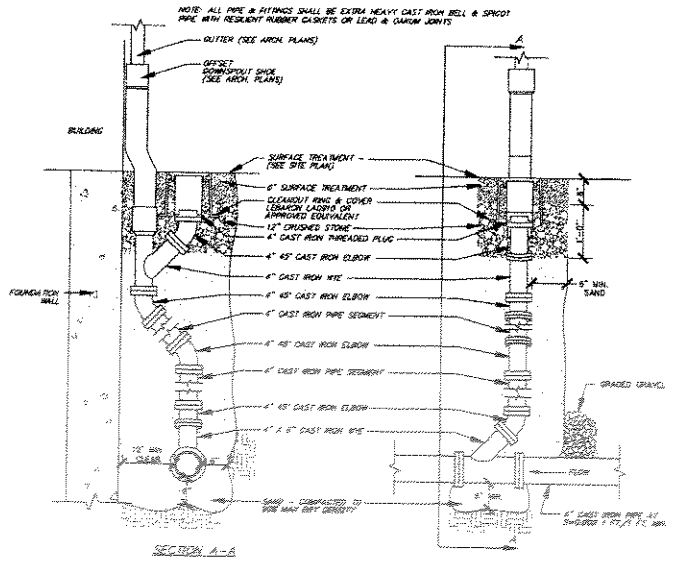

ROOF DRAIN CONNECTION

NOT TO SCALE

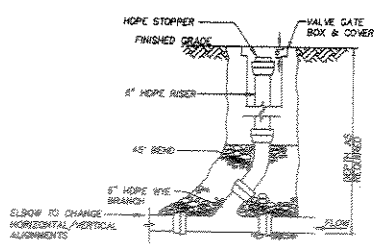

ROOF DRAIN/ FOOTING DRAIN CLEANOUT

NOT TO SCALE

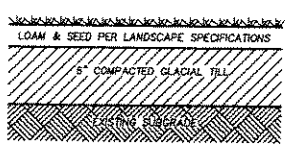

FOREBAY LINER

NOT TO SCALE

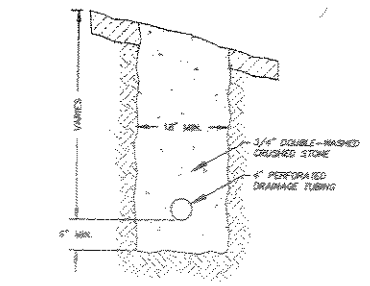

INTERCEPTOR DRAIN DETAIL

NOT TO SCALE

RIP-RAP SPECIFICATIONS

STONE SIZE	% OF TOTAL WEIGHT SMALLER THAN GIVEN SIZE
100 LB.	100%
60 LB.	80%
25 LB.	50%
2 LB.	NOT TO EXCEED 10%

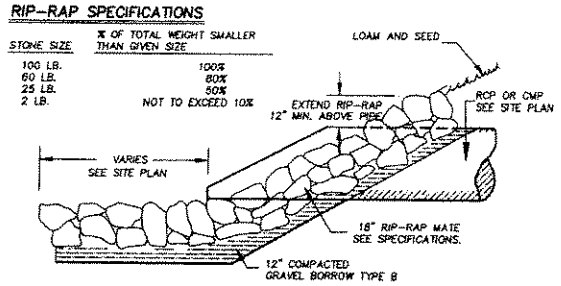

FLARED END RIP-RAP INLET/OUTLET

NOT TO SCALE

FOR PERMITTING PURPOSES ONLY
NOT FOR CONSTRUCTION

REVISIONS:
8-2-06 REVISIONS PER REVIEW COMMENTS

DRAINAGE DETAILS
Senior Residence Development
40B Development Plan in
ACTON & WESTFORD, MASS.
PREPARED FOR:
Woodlands at Laurel Hill, LLC
676 ELM STREET, SUITE 300
CONCORD, MA 01801
SCALE: AS SHOWN DATE: June 9, 2006

PLACES Site Consultants, Inc.
PLANNING LANDSCAPE ARCHITECTURE CIVIL ENGINEERING SURVEYING
694 MAIN STREET, SUITE 3
HOLDEN, MA 01520-1862
508.829.0333 Fax 508.829.0904
EMAIL places@verizon.net

PROJECT No.: 05-046 PLAN No. 349-03

SIGN	LEGEND	DIMENSIONS	SPECIFICATIONS
STOP	R1-1	24" OCTAGONAL	MUTCD
SPEED LIMIT 10	R2-1	18" X 24"	MUTCD
	R7-8	12" X 18"	MUTCD
	R7-8B	12" X 6"	MUTCD
	CR-NL	12" X 18"	CUSTOM
DO NOT ENTER	R5-1	24"	MUTCD
AUTHORIZED VEHICLES ONLY	AT-VO	24" X 8"	CUSTOM

SIGN SCHEDULE
NOT TO SCALE

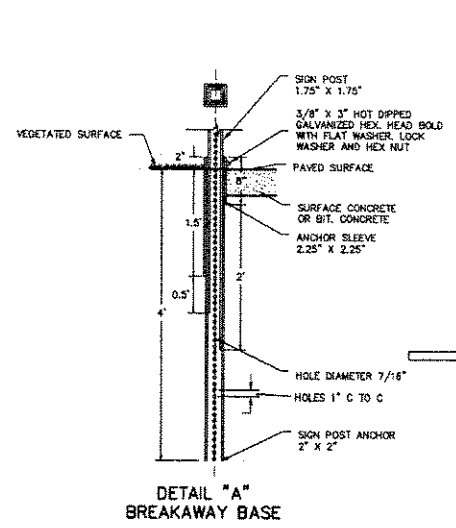

DETAIL "A"
BREAKAWAY BASE

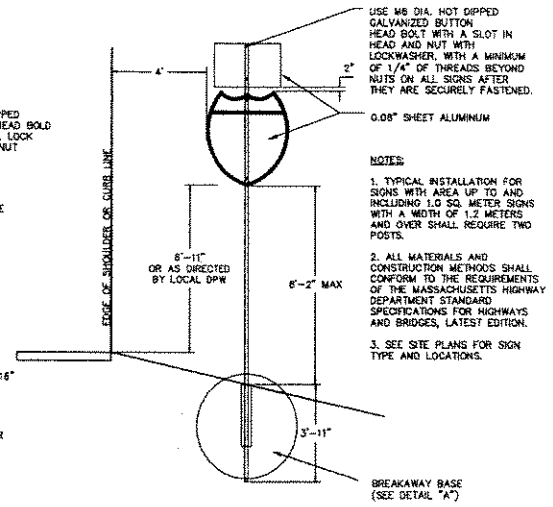

TYPICAL SIGN
NOT TO SCALE

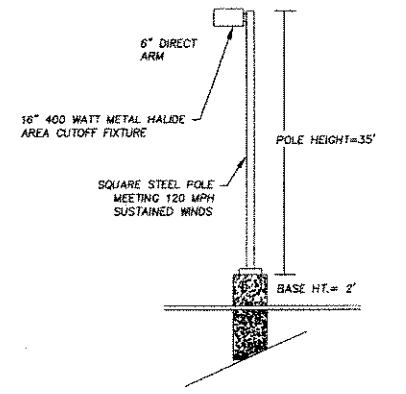

ROADWAY/PARKING AREA LIGHT
NOT TO SCALE

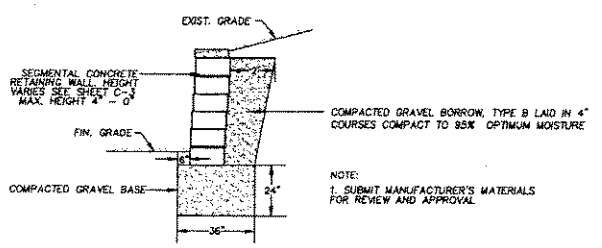

SEGMENTAL UNIT RETAINING WALL
NOT TO SCALE

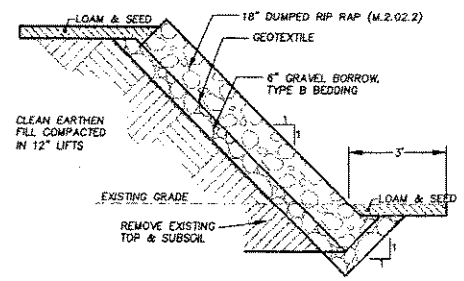

RIP RAP STABILIZED SLOPE
NOT TO SCALE

UNLESS OTHERWISE SPECIFIED OR SHOWN, PROVIDE RIP-RAP SLOPES FOR ALL DESIGN SLOPES 1:1 OR STEEPER

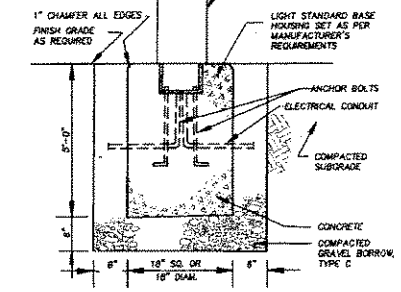

LIGHT STANDARD BASE
NOT TO SCALE

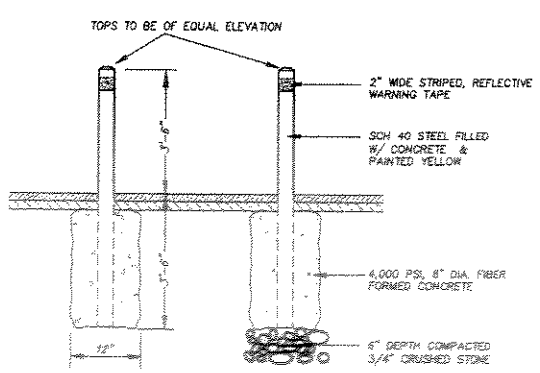

BOLLARD GUARD
NOT TO SCALE

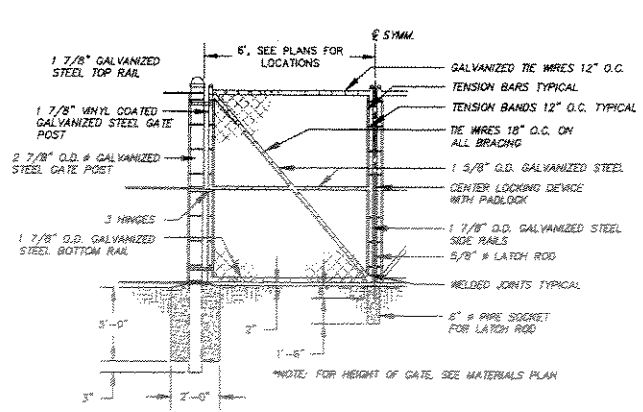

CHAIN LINK GATE
NOT TO SCALE

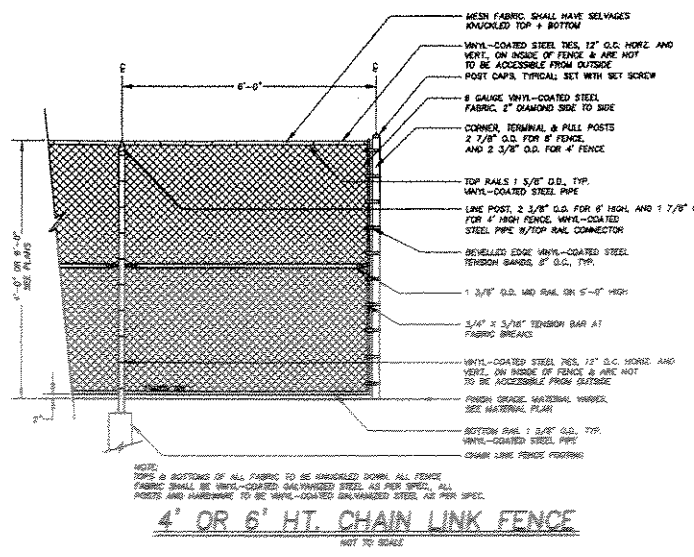

4' OR 6' HT. CHAIN LINK FENCE
NOT TO SCALE

FOR USE WHERE SHOWN AND AT TOPS OF RETAINING WALLS GREATER THAN 4' IN HEIGHT

FOR PERMITTING PURPOSES ONLY
NOT FOR CONSTRUCTION

REVISIONS:
8-2-06 REVISIONS PER REVIEW COMMENTS

CONSTRUCTION DETAILS & SITE IMPROVEMENTS
Senior Residence Development

40B Development Plan in
ACTON & WESTFORD, MASS.

PREPARED FOR:
Woodlands at Laurel Hill, LLC
676 ELM STREET, SUITE 300
CONCORD, MA 01801

SCALE: AS SHOWN DATE: June 9, 2006

PLACES Site Consultants, Inc.
PLANNING LANDSCAPE ARCHITECTURE CIVIL ENGINEERING SURVEYING
694 MAIN STREET, SUITE 3
HOLDEN, MA 01520-1862
508.829.0333 Fax 508.829.0904
EMAIL places@verizon.net

PROJECT No.: 06-349 PLAN No. 349-D-4

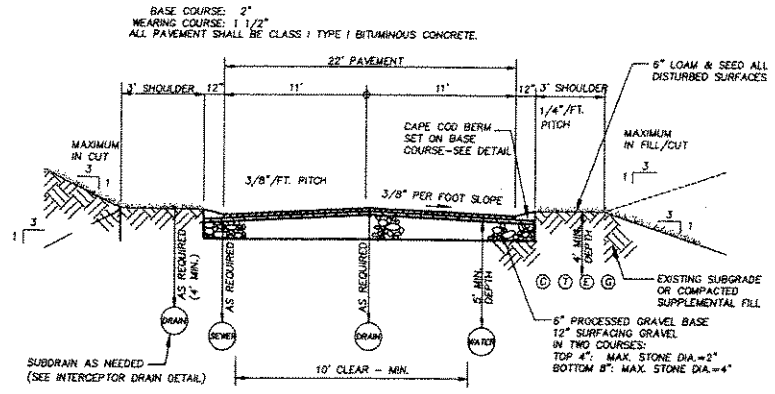

TYPICAL STREET CROSS SECTION - OVER 55 DEVELOPMENT

NOT TO SCALE

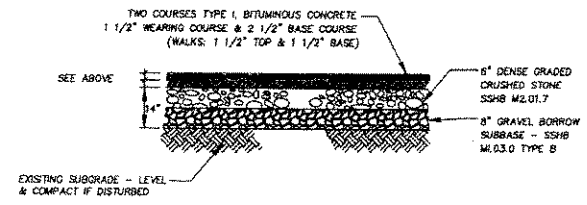

BITUMINOUS CONC. WALKWAY, DRIVE & PARKING

NOT TO SCALE

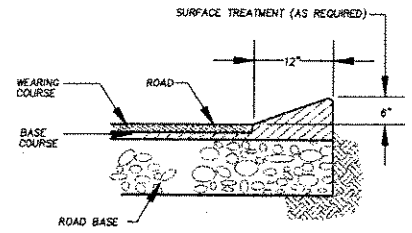

CAPE COD BERM

NOT TO SCALE

PREDOMINANT CURB USED WHERE OTHERS ARE NOT SPECIFIED

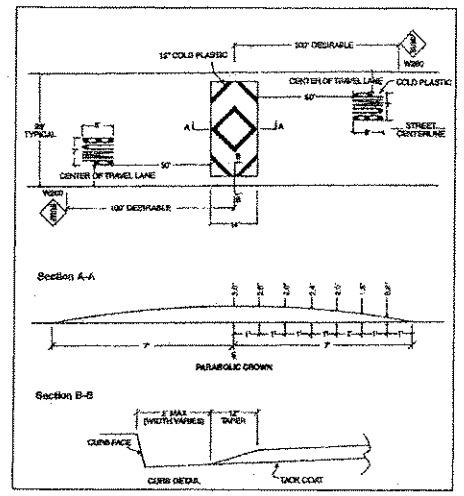

BITUMINOUS CONCRETE SPEED BUMP

NOT TO SCALE

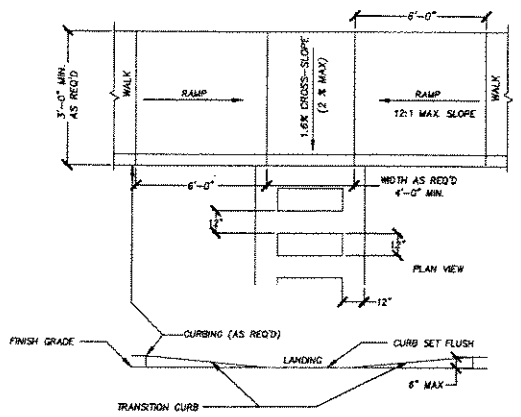

TYPE 2 ACCESSIBLE RAMP (AR-2)

NOT TO SCALE

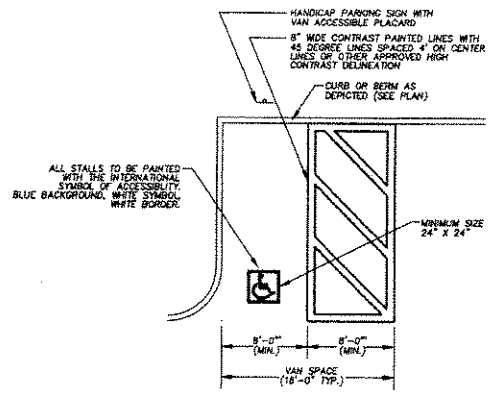

NOTES:

1) PARKING SPACES SHALL MEET THE REQUIREMENTS OF THE CODE OF MASSACHUSETTS REGULATIONS ARCHITECTURAL ACCESS BOARD - 521CMR.

2) PARKING SPACES AND ACCESS ISLES SHALL BE LEVEL WITH SURFACE SLOPES NOT EXCEEDING 1:50 (2 %) IN ALL DIRECTIONS.

3) ACCESS ISLES ADJACENT TO ACCESSIBLE PARKING SPACES SHALL BE 5'-0" WIDE MINIMUM, EXCEPT ADJACENT VAN ACCESSIBLE SPACES, THE ACCESS ISLE SHALL BE A MINIMUM 8'-0" WIDE MINIMUM. A MINIMUM OF ONE VAN SPACE SHALL BE PROVIDED PER SITE.

4) TWO ACCESSIBLE SPACES MAY SHARE A COMMON ACCESS ISLE.

5) A SIGN, IDENTIFYING ACCESSIBLE PARKING SPACES AS RESERVED, SHALL BE LOCATED AT THE HEAD OF EACH SPACE AND NO MORE THAN 10'-0" AWAY. THE SIGN SHALL BE AS SPECIFIED BY THE MANUAL OF UNIFORM TRAFFIC CONTROL DEVICES (MUTCD), R26-3) OR APPROVED EQUAL.

6) SIGNS AT THE HEAD OF VAN ACCESSIBLE SPACES SHALL INCLUDE THE WORDS: VAN ACCESSIBLE.

ACCESSIBLE PARKING SPACES

NOT TO SCALE

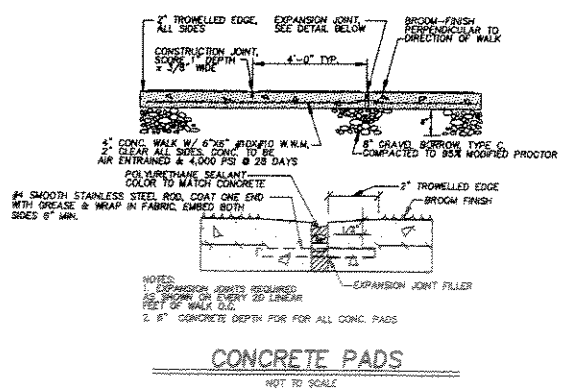

CONCRETE PADS

NOT TO SCALE

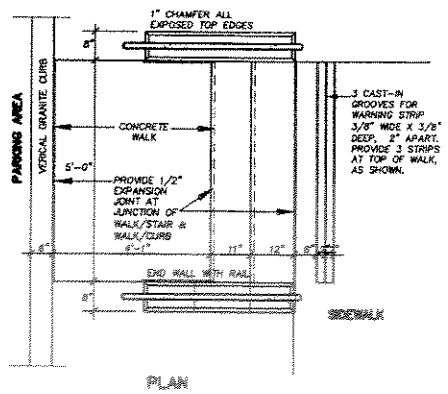

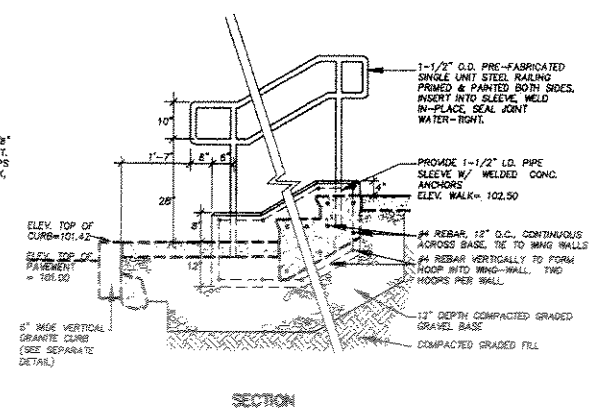

CONCRETE STAIRS WITH RAIL

NOT TO SCALE

NOTES:

ALL REBAR TO BE CLEAR ALL FINISHED FACES 2" MIN.

CONCRETE TO BE 4,000 PSI @ 28 DAYS, AIR ENTRAINED.

STAIRS TO BE BROOM FINISHED PARALLEL TO TREAD (LONGITUDINALLY) TO PROVIDE TRACTION - SEE CONC. WALK DETAIL.

EXPANSION JOINTS TO BE PROVIDED AT JUNCTION OF ALL WALKS, STAIRS, CURBING AND OTHER STRUCTURES.

A PRECAST STRUCTURE MAY BE SUBSTITUTED, SUBJECT TO SHOP DRAWING SUBMISSION & APPROVAL.

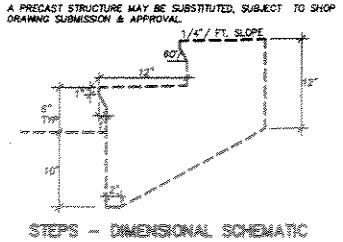

STEPS - DIMENSIONAL SCHEMATIC

REVISIONS:

8-2-06 REVISIONS PER REVIEW COMMENTS

FOR PERMITTING PURPOSES ONLY

NOT FOR CONSTRUCTION

CONSTRUCTION DETAILS & SITE IMPROVEMENTS

Senior Residence Development

40B Development Plan in
ACTON & WESTFORD, MASS.

PREPARED FOR:

Woodlands at Laurel Hill, LLC
676 ELM STREET, SUITE 300
CONCORD, MA 01801

SCALE: AS SHOWN DATE: June 9, 2006

PLACES
Site Consultants, Inc.
PLANNING LANDSCAPE ARCHITECTURE CIVIL ENGINEERING SURVEYING
694 MAIN STREET, SUITE 3
HOLDEN, MA 01520-1862
508.829.9333 Fax 508.829.9904
EMAIL places@verizon.net

PROJECT No.: 06-348 PLAN No. 348-D-6

STORMWATER POLLUTION PREVENTION PLAN

GENERAL:

1. THIS PLAN IS ALSO INTENDED TO PROVIDE GUIDANCE AND INSTRUCTION TO THE OWNER AND CONTRACTOR(S) IN THE PREVENTION OF EROSION AND SEDIMENTATION ON AND OFF-SITE. THIS PLAN IS INTENDED TO ALLOW ANY PERMIT CONDITIONS OR ORDERS OF CONDITIONS TO BE MORE SPECIFIC IN ADDRESSING ITEMS OF CONCERN. IF, UPON ISSUANCE OF A COMPREHENSIVE PERMIT FROM THE ACTON BOARD OF APPEALS OR AN ORDER OF CONDITIONS BY THE ACTON BOARD CONSERVATION COMMISSION, ANY ITEMS SPECIFIED HEREIN ARE IN CONFLICT WITH THE ORDERS OF CONDITIONS, SAID ORDERS OF CONDITIONS SHALL SUPERSEDE THE REQUIREMENTS SPECIFIED ON THIS PLAN.

2. THIS PLAN IS PART OF A SET OF DOCUMENTS THAT ARE TO BE VIEWED AND REVIEWED IN THEIR ENTIRETY, SUCH DOCUMENTS INCLUDE THE CONSTRUCTION SPECIFICATIONS, CONSTRUCTION PLANS AND ANY PERMITS ISSUED BY THE TOWN OF ACTON, AGENTS OF THE TOWN OF ACTON OR OTHER REGULATORY AGENCIES.

EROSION CONTROL MEASURES:

1. THE CONTRACTOR SHALL BE RESPONSIBLE FOR ENSURING THAT EROSION AND SEDIMENTATION ARE CONTROLLED. THIS PLAN SHALL BE SHALL BE ADAPTED TO FIT THE CONTRACTOR'S EQUIPMENT, WEATHER CONDITIONS, AND ANY PERMIT CONDITIONS/ORDERS OF CONDITIONS ISSUED BY THE ZONING BOARD OF APPEALS , CONSERVATION COMMISSION AND ANY SPECIAL CONDITIONS ISSUED BY ANY OTHER REGULATORY AGENCY OF THE TOWN OF ACTON.

2. THE MOST IMPORTANT ASPECTS OF CONTROLLING EROSION AND SEDIMENTATION ARE LIMITING THE EXTENT OF DISTURBANCE AND STABILIZING SURFACES AS SOON AS POSSIBLE. OF SECONDARY IMPORTANCE IN EROSION CONTROL IS THE LIMITING THE SIZE AND LENGTH OF THE TRIBUTARY DRAINAGE AREA WITHIN THE WORK SITE AND DRAINAGE STRUCTURES. THESE FUNDAMENTAL PRINCIPLES SHALL BE THE KEY FACTOR IN THE CONTRACTOR'S CONTROL OF EROSION ON THE SITE.

3. THE EXISTING SOIL CONDITIONS PROVIDE THE POTENTIAL OF RUNOFF TO OFF-SITE AREAS WITH EROSION POTENTIAL.

4. THE CONTRACTOR SHALL CONSTRUCT TEMPORARY DIVERSION SWALES AND SETTLING BASINS IN AREAS OF FUTURE CONSTRUCTION. CONSTRUCTION IS PERMITTED BEYOND THE LIMIT OF DISTURBANCE ONLY WHEN ADDITIONAL DRAINAGE MEASURES OR STABILIZATION MEASURES ARE NEEDED, AND SHALL BE SUBJECT TO APPROVAL BY THE ACTON CONSERVATION COMMISSION, PRIOR TO WORK OUTSIDE OF DESIGNATED LIMIT OF DISTURBANCE LINE. THE LIMIT OF DISTURBANCE LINE SHALL BE THE EROSION CONTROL BARRIER.

5. ALL DISTURBED SURFACES SHALL BE STABILIZED A MINIMUM OF 14 DAYS AFTER CONSTRUCTION IN ANY PORTION OF THE SITE HAS CEASED OR IS TEMPORARILY HALTED UNLESS ADDITIONAL CONSTRUCTION IS INTENDED TO BE INITIATED WITHIN 21 DAYS.

6. THE CONTRACTOR IS RESPONSIBLE FOR THE MAINTENANCE AND REPAIR OF ALL EROSION CONTROL DEVICES ON-SITE. ALL EROSION CONTROL DEVICES SHALL BE REGULARLY INSPECTED. ANY SEDIMENTS REMOVED FROM THE CONTROL DEVICES SHALL BE DISPOSED OF OUTSIDE OF THE 100' WETLANDS BUFFER ZONE.

7. AT NO TIME SHALL SILT-LADEN WATER BE ALLOWED TO ENTER SENSITIVE AREAS (WETLANDS, OFF-SITE AREAS AND DRAINAGE SYSTEMS). ANY RUNOFF FROM DISTURBED SURFACES SHALL BE DIRECTED THROUGH SETTLING BASINS AND EROSION CONTROL BARRIERS PRIOR TO ENTERING ANY SENSITIVE AREAS.

NPDES GENERAL NOTES:

1. THIS PLAN IS INTENDED TO MEET THE REQUIREMENTS OF THE NATIONAL STORM WATER POLLUTION DISCHARGE ELIMINATION SYSTEM (NPDES) OF SECTION 402 OF THE FEDERAL CLEAN WATER ACT. THE CONSTRUCTION OF THE ROADWAY, BUILDINGS AND APPURTENANT STRUCTURES WILL RESULT IN MORE THAN 1 ACRE OF TOTAL DISTURBED AREA, REQUIRING THE SUBMITTAL OF A STORM WATER POLLUTION PREVENTION PLAN (SWPPP) FOR THIS SITE.

2. IT IS ANTICIPATED THAT THE SITE AS DESIGNED WILL MEET THE CRITERIA FOR A NPDES GENERAL PERMIT. THE SUBMISSION OF THE NPDES NOTICE OF INTENT (NPDES NOI), THIS PLAN AND SUPPORTING DOCUMENTATION MUST BE POSTMARKED A MINIMUM OF TWO (2) DAYS PRIOR TO THE INITIATION OF ANY SITE DISTURBANCE OR CONSTRUCTION.

NPDES RECORD REQUIREMENTS:

1. A COPY OF THE NPDES SUBMITTAL AND THIS PLAN MUST BE KEPT ON-SITE AT ALL TIMES DURING CONSTRUCTION AND SHALL BE MADE AVAILABLE TO ALL INTERESTED PARTIES.

2. RECORDS MUST BE MAINTAINED BY THE PERMITEE FOR A PERIOD OF THREE (3) YEARS FROM THE DATE OF STABILIZATION OF THE SITE. STABILIZATION OCCURS WHEN THE SITE HAS OVER 70 % VEGETATIVE GROWTH AND/OR MECHANICAL STABILIZATION THROUGHOUT.

NPDES INSPECTION REQUIREMENTS:

1. ALL INSPECTIONS SHALL BE CONDUCTED BY QUALIFIED PERSONNEL, WHO SHALL PRODUCE WRITTEN QUANTITATIVE AND QUALITATIVE REPORTS ON THE METHODS, SUITABILITY OF STRUCTURES AND THE GENERAL CONSTRUCTION.

2. INSPECTIONS ARE REQUIRED DURING SITE ALTERATIONS A MINIMUM OF ONCE EVERY SEVEN (7) DAYS WHILE SURFACES ARE UNSTABILIZED.

3. INSPECTIONS ARE REQUIRED WITHIN 24 HOURS OF STORMS WHICH PRODUCE 0.5" OF PRECIPITATION OR GREATER.

4. WHEN THE SITE IS FULLY STABILIZED, INSPECTIONS SHALL BE CONDUCTED AT MONTHLY INTERVALS FOR A PERIOD OF 3 YEARS.

PRELIMINARY SITE WORK:

1. MATERIAL REMOVED SHOULD BE STOCKPILED, SEPARATING THE TOPSOIL FOR FUTURE USE ON THE SITE. EROSION CONTROLS SHALL BE UTILIZED ALONG THE DOWNSLOPE SIDE OF THE PILES IF THE PILES ARE TO REMAIN MORE THAN THREE WEEKS OR SUBJECT TO EROSIVE CONDITIONS SUCH AS INTENSE RAIN, WIND OR OTHER EXPOSURE.

2. STOCKPILES SHALL BE LOCATED AS SPECIFIED HEREIN AND AS REQUIRED. SHOULD ADDITIONAL AREAS BE NEEDED THEY SHALL BE LOCATED WITHIN THE LIMITS OF DISTURBANCE, IN AREAS OF MINIMAL IMPACT. IF A STOCKPILE IS LOCATED ON A SLOPE, THE RUNOFF SHALL BE DIRECTED AWAY FROM THE PILE.

3. IF INTENSE RAINFALL IS ANTICIPATED, THE INSTALLATION OF SUPPLEMENTAL HAYBALE DIKES, SILT FENCES, OR ARMORED DIKES SHALL BE UTILIZED.

4. IF THE SITE CONSTRUCTION OCCURS AT ANY TIME OTHER THAN THE MAY - NOVEMBER CONSTRUCTION SEASON, THE SITE DRAINAGE SYSTEM SHALL BE INSTALLED, MAINTAINING HYDRAULIC CAPACITY, PRIOR TO ANY ROUGH GRADING IN THE BUFFER ZONE.

DRAINAGE SYSTEM:

1. THE DRAINAGE SYSTEM SHALL BE INSTALLED FROM THE DOWNSTREAM END UP.

2. A SILT FENCE SHALL BE INSTALLED AT THE OUTFALL OF ALL TEMPORARY BASINS AND SWALES. IT SHALL REMAIN IN PLACE UNTIL ALL TRIBUTARY AREAS ARE STABILIZED.

3. WATER SHALL NOT BE ALLOWED TO ENTER PIPES FROM UN-STABLIZED SURFACES.

4. TRENCH EXCAVATIONS SHALL BE LIMITED TO THE MINIMUM LENGTH REQUIRED FOR DAILY PIPE INSTALLATION. ALL TRENCHES SHALL BE BACKFILLED AS SOON AS POSSIBLE. THE ENDS OF PIPES SHALL BE CLOSED NIGHTLY WITH PLYWOOD AND BACKER BOARD.

5. IF UNSTABLE AREAS ARE ENCOUNTERED DUE TO NATURAL SPRINGS OR GROUNDWATER BREAKOUT, INTERCEPTOR DRAINS SHALL BE INSTALLED TO DIRECT THE RUNOFF INTO THE DRAINAGE SYSTEM, SEE DETAILS.

6. IT IS IMPORTANT THAT THE BINDER COURSE, WITH BERMS, BE INSTALLED ON THE LIMITS OF THE PARKING LOT AND ACCESS ROADS AS SOON AS FEASIBLE AS THESE AREAS WILL FUNCTION AS A CONDUIT FOR RUNOFF.

INSTALLATION OF UTILITIES:

1. CARE SHALL BE TAKEN TO ASSURE THAT THE UTILITY TRENCHES DO NOT CHANNELIZE RUNOFF TOWARDS EXISTING STREETS OR OTHER OFF-SITE AREAS.

2. THE INSTALLATION OF SUBSURFACE UTILITIES AND APPURTENANCES SHALL BE IN ACCORDANCE WITH THE APPLICABLE UTILITY COMPANY SPECIFICATIONS.

3. TRENCH EXCAVATIONS SHALL BE LIMITED TO THE MINIMUM LENGTH REQUIRED FOR DAILY UTILITY INSTALLATION. ALL TRENCHES SHALL BE BACKFILLED AS SOON AS POSSIBLE.

LANDSCAPING:

1. LANDSCAPING SHALL OCCUR AS SOON AS POSSIBLE TO PROVIDE PERMANENT STABILIZATION OF DISTURBED SURFACES.

2. CONTRACTOR SHALL UTILIZE A VARIETY OF SLOPE STABILIZATION METHODS AND MATERIALS WHICH SHALL BE ADJUSTED TO THE SITE CONDITIONS. EROSION CONTROL BLANKETS OR MIRAFI MIRAMAT (OR SIMILAR PRODUCTS) SHALL BE AVAILABLE ON SITE.

3. IF THE SEASON OR ADVERSE WEATHER CONDITIONS DO NOT ALLOW THE ESTABLISHMENT OF VEGETATION, TEMPORARY MULCHING WITH HAY, TACKIFIED WOOD CHIPS OR OTHER METHODS SHALL BE PROVIDED.

4. A MINIMUM OF 6" TOPSOIL SHALL BE PLACED AND ITS SURFACE SMOOTHED TO THE SPECIFIED GRADES.

5. SEED APPLICATIONS SHALL BE IN ACCORDANCE WITH THE GRASS AND SLOPE COVER SPECIFICATIONS.

6. TO ENSURE A DENSE, SUCCESSION GROWTH, SEED MIXTURE TYPE "C" IS REQUIRED ON ALL DISTURBED SURFACES, EXCEPT WHERE LAWN AREA IS PROPOSED, SEED MIXTURE TYPE "A" IS REQUIRED IN THESE AREAS.

PRE-CONSTRUCTION:

1. AN EROSION CONTROL BARRIER (SEE BELOW) SHALL BE INSTALLED AS DEPICTED ON THE SITE PLAN, BETWEEN THE AREAS TO BE DISTURBED AND WETLAND AREAS. THIS BARRIER SHALL REMAIN IN PLACE UNTIL ALL TRIBUTARY SURFACES HAVE BEEN FULLY STABILIZED. THE EROSION CONTROL BARRIERS AS SHOWN ON THE SITE PLAN ARE THE MINIMUM REQUIRED TO PROTECT THE ON & OFF SITE DRAINAGE SYSTEMS.

2. PHOTOGRAPHS AND/OR VIDEO IMAGES OF THE PRE-CONSTRUCTION CONDITION OF THE SITE AND SURROUNDING AREAS, ESPECIALLY THE ADJACENT STREETS SHALL BE TAKEN, DEVELOPED AND DATED. A COPY OF THESE MATERIALS SHALL BE SUBMITTED TO THE COMMISSION AND OWNER FOR THEIR FILES. THESE PICTURES AND IMAGES SHALL REFERENCE EXISTING SITE CONDITIONS AND PERMANENT REFERENCE MARKS TO ENABLE RECOGNITION OF THE AREA BEING PHOTOGRAPHED, AND SHALL REPRESENT A COMPREHENSIVE VIEW OF THE SITE PRIOR TO DEVELOPMENT.

3. THE CONTRACTOR SHALL ESTABLISH A STAGING AREA ON A PORTION OF THE AREA TO BE DISTURBED FOR THE OVERNIGHT STORAGE OF EQUIPMENT AND STOCKPILING OF MATERIALS. THE STAGING AREA SHALL BE OUTSIDE OF THE 100' WETLANDS BUFFER ZONE.

4. IN THE STAGING AREA, THE CONTRACTOR SHALL HAVE A STOCKPILE OF MATERIALS REQUIRED TO CONTROL EROSION ON-SITE TO BE USED TO SUPPLEMENT OR REPAIR EROSION CONTROL DEVICES. THESE MATERIALS SHALL INCLUDE, BUT ARE NOT LIMITED TO: HAYBALES, SILT FENCE AND CRUSHED STONE.

5. A TEMPORARY STONE CONSTRUCTION ENTRANCE IS REQUIRED TO PREVENT TRACKING OF SILT, MUD, ETC. ONTO EXISTING ROADS. THE STONE SHALL BE REPLACED REGULARLY AS WELL AS WHEN THE STONE IS SILT LADEN OR EQUIPMENT IS OBSERVED TO BE TRACKING SOIL ONTO THE ROADWAYS.

6. THE CONTRACTOR IS RESPONSIBLE FOR EROSION CONTROL ON SITE AND SHALL UTILIZE EROSION CONTROL MEASURES WHERE NEEDED, REGARDLESS OF WHETHER THE MEASURES ARE SPECIFIED HEREIN, ON THE PLAN OR IN ANY ORDER OF CONDITIONS.

GENERAL CONSTRUCTION REQUIREMENTS:

1. ANY REFUELING OF CONSTRUCTION VEHICLES AND EQUIPMENT SHALL TAKE PLACE OUTSIDE OF THE 100 FOOT BUFFER ZONE TO THE ENTRANCE TO THE DRAINAGE SYSTEM AND SHALL NOT BE CONDUCTED IN PROXIMITY TO SEDIMENTATION BASINS OR DIVERSION SWALES.

2. NO ON-SITE DISPOSAL OF SOLID WASTE, INCLUDING BUILDING MATERIALS IS ALLOWED IN THE 100 FOOT BUFFER ZONE. THE BURIAL OF STUMPS, CONSTRUCTION DEBRIS OR OTHER MATERIALS SHALL NOT BE ALLOWED ANYWHERE ON-SITE.

3. NO MATERIALS SHALL BE DISPOSED OF INTO THE WETLANDS OR EXISTING OR PROPOSED DRAINAGE SYSTEMS. ALL CONTRACTORS INCLUDING: CONCRETE SUPPLIERS, PAINTERS AND PLASTERERS, SHALL BE INFORMED THAT THE CLEANING OF EQUIPMENT IS PROHIBITED IN AREAS WHERE THE WASH-WATER WILL DRAIN DIRECTLY TO THE SITE DRAINAGE SYSTEMS.

4. CONTRACTOR IS RESPONSIBLE FOR DUST CONTROL WHICH SHALL INCLUDE STREET SWEEPING OF ALL PAVED SURFACES WITHIN THE SITE AND OFF-SITE AREAS THAT ARE IMPACTED BY SITE CONSTRUCTION ON A REGULAR BASIS, AS NEEDED.

5. UNLESS OTHERWISE SHOWN OR SPECIFIED ON THE PLANS, NO DISTURBANCE WITHIN TWENTY-FIVE (25') OF THE EDGE OF WETLANDS SHALL BE PERMITTED. ALL EROSION CONTROL BARRIERS SHALL BE UPGRADIENT (UPLANDS) OF THIS LINE. SUCH BARRIERS SHALL ACT AS THE LIMIT OF DISTURBANCE FOR THE PROJECT. INTRUSIONS BEYOND (WITHIN THE 25' OFFSET) SHALL ONLY BE CARRIED- OUT WITH THE APPROVAL OF THE CONSERVATION COMMISSION OR THEIR APPOINTED AGENT.

ARMORED DIKE
NOT TO SCALE

HAYBALE DIKE
NOT TO SCALE

SILTATION BARRIER
NOT TO SCALE

SILT FENCE DETAIL
NOT TO SCALE

TEMPORARY DEWATERING AREA
NOT TO SCALE

NOTE: TOTAL VOLUME OF TRAP TO EQUAL OR EXCEED A VOLUME OF 0.5" PER ACRE OF UN-STABILIZED AREA.

TEMPORARY EXCAVATED SEDIMENT TRAP
NOT TO SCALE

TEMPORARY CONSTRUCTION ENTRANCE
NOT TO SCALE

DRAINAGE SYSTEM OPERATIONS & MAINTENANCE PLAN

STORM WATER COLLECTION SYSTEM:

THE STORMWATER COLLECTION SYSTEM SERVING THIS SITE IS INTENDED TO BOTH COLLECT STORM WATER RUNOFF AND TO PROVIDE PARTIAL TREATMENT OF THE STORMWATER PRIOR TO ITS COLLECTION INTO THE OFFSITE DETENTION BASIN AND RECHARGE INTO THE GROUNDWATER. THIS SYSTEM COLLECTS RUNOFF GENERATED FROM THE SITE THROUGH THE USE OF CATCHBASINS. EACH CATCHBASIN IS EQUIPPED WITH A FOUR (4') FOOT DEEP SUMP (WHICH COLLECTS SEDIMENTS AND DEBRIS) AND A OIL/GAS TRAP (WHICH PREVENTS THE INTRUSION OF HYDROCARBONS AND OTHER FLOATING MATERIALS FROM ENTERING THE DRAINAGE SYSTEM). WHEN THESE TWO BASIC CONTROL MECHANISMS ARE FUNCTIONING PROPERLY THEY PROVIDE FOR A REDUCTION OF CONTAMINANTS AND DEBRIS ENTERING THE STORMWATER COLLECTION AND RECHARGE SYSTEMS, AND THEREFORE DOWNSTREAM RECEIVING WATERS/WETLANDS.

THIS SITE MAY ALSO BE SERVED BY INFILTRATION SYSTEMS WHICH COLLECT THE GENERATED RUNOFF AND RECHARGE IT TO THE GROUND, THUS PROVIDING RECHARGE SIMILAR TO THAT OF THE PRE-DEVELOPMENT CONDITION AND FILTERING THE RUNOFF AS IT TRAVELS THROUGH THE EXISTING SOILS TO THE GROUNDWATER TABLE.

BOTH OF THE ABOVE-DESCRIBED SYSTEMS RELY UPON PROPER MONITORING, OPERATIONS AND MAINTENANCE TO FUNCTION AS DESIGNED AND INTENDED. A PROGRAM OF MONITORING, OPERATIONS AND MAINTENANCE MUST BE ON-GOING THROUGHOUT THE LIFE AND USE OF THE SITE, AND IS THE OWNER'S RESPONSIBILITY SOLELY. THESE ACTIVITIES AS DESCRIBED BELOW, ARE TO BE INITIATED AFTER COMPLETION OF THE PROJECT AND ARE NOT RELATED TO THE CONSTRUCTION OF THE SITE, EXCEPT AS SPECIFICALLY PROVIDED. THIS PLAN IS SPECIFICALLY FOR SITE-RELATED ACTIVITIES, NOT ACTIVITIES WHICH ARE INTERIOR TO BUILDINGS, THOUGH THERE ARE NECESSARY IMPLICATIONS AND CORRELATION'S BETWEEN THE TWO.

MONITORING:

THE DRAINAGE SYSTEMS ARE REQUIRED TO BE MONITORED BY THE OWNER, WHO SHALL DIRECT AN INDIVIDUAL TO ACT AS THE SYSTEM'S MANAGER. THE NAME, ADDRESS AND DAY AND NIGHT (OR EMERGENCY) TELEPHONE NUMBER OF THIS PERSON OR ENTITY SHALL BE PROVIDED TO THE ACTON BOARD OF HEALTH PRIOR TO THE ISSUANCE OF A CERTIFICATE OF COMPLIANCE OF CONSTRUCTION. THIS INDIVIDUAL SHALL BE REQUIRED TO KEEP A LOG OF ALL REQUIRED INSPECTIONS, OBSERVATIONS AND MAINTENANCE ACTIVITIES DRAINAGE SYSTEM COMPONENTS SHALL BE REFERRED TO BY SPECIFIC LOCATION OR THE DESIGN PLAN DESIGNATION, (E.G. CTB # 10) TO AVOID CONFUSION OR MIS-IDENTIFICATION. THE LOG SHALL BE MADE AVAILABLE TO THE CONSERVATION COMMISSION WITHIN TEN (10) DAYS OF A WRITTEN REQUEST BY THAT AGENCY.

MONITORING FOR THIS SITE SHALL CONSIST OF THE FOLLOWING:

1. ALL CATCHBASINS SHALL BE INSPECTED TO ENSURE THEY ARE WATER-TIGHT (HOLDING WATER), HAVE ADEQUATE SUMP CAPACITY, ALL OIL/GAS TRAPS ARE IN-PLACE, ALL GRATES AND FRAMES ARE FREE FROM STRUCTURAL DAMAGE, AND ARE DRAINING FREELY. THIS MONITORING SHALL OCCUR AT A MINIMUM OF FOUR (4) MONTH INTERVALS (QUARTERLY).
2. ALL DRAINAGE MANHOLES SHALL BE INSPECTED TO ENSURE THAT THEY ARE WATER-TIGHT, ALL LIDS AND FRAMES ARE FREE FROM STRUCTURAL DAMAGE, ARE DRAINING FREELY AND ARE NOT PONDING WATER. THIS MONITORING SHALL OCCUR A MINIMUM OF ONCE PER YEAR.
3. OTHER DRAINAGE SYSTEMS SHALL BE INSPECTED TO ENSURE THAT NO EROSION IS OCCURRING AT OUTLETS, ALL OUTLETS ARE FREE-FLOWING AND NO DAMAGE HAS OCCURRED AS PART OF SITE MAINTENANCE OR ACTIVITIES.

OPERATIONS:

1. GOOD HOUSE KEEPING AND MATERIAL MANAGEMENT REDUCE THE RISK OF SPILLS OR OTHER ACCIDENTAL EXPOSURE OF MATERIALS AND SUBSTANCES TO STORMWATER RUNOFF. A POLLUTION PREVENTION PLAN SHALL BE DEVELOPED WHICH SHALL INCLUDE THE FOLLOWING AT A MINIMUM:
   A. ALL MATERIALS STORED ON-SITE WILL BE STORED IN A NEAT, ORDERLY MANNER IN THEIR APPROPRIATE CONTAINERS AND, IF POSSIBLE, UNDER A ROOF OR OTHER ENCLOSURE.
   B. PRODUCTS SHALL BE KEPT IN THEIR ORIGINAL CONTAINERS WITH THE ORIGINAL MANUFACTURER'S LABEL.
   C. SUBSTANCES SHOULD NOT BE MIXED WITH ONE ANOTHER, UNLESS RECOMMENDED BY THE MANUFACTURER.
   D. WHENEVER POSSIBLE, ALL OF A PRODUCT WILL BE USED UP BEFORE DISPOSING OF A CONTAINER.
   E. THE SYSTEM'S MANAGER SHALL INSPECT THE SITE DAILY TO ENSURE PROPER USE AND DISPOSAL OF MATERIALS ONSITE, DURING ALL CONSTRUCTION PHASES
   F. ORIGINAL MATERIALS LABELS AND MATERIAL SAFETY DATA SHEETS SHALL BE KEPT; THEY RETAIN IMPORTANT INFORMATION.
   G. PETROLEUM PRODUCTS:
   1) ALL ONSITE VEHICLES AND PARKING AREAS SHALL BE REGULARLY MONITORED FOR LEAKS AND RECEIVE REGULAR PREVENTIVE MAINTENANCE TO PREVENT LEAKAGE.
   2) PETROLEUM PRODUCTS SHALL BE STORED UNDER COVER AND SHALL BE IN TIGHTLY SEALED CONTAINERS WHICH ARE CLEARLY LABELED.
   H. FERTILIZERS:
   1) FERTILIZERS SHALL ONLY BE USED IN THE MINIMUM AMOUNTS AS RECOMMENDED BY THE MANUFACTURER.
   2) THE CONTENTS OF ANY UN-USED FERTILIZER SHALL BE TRANSFERRED TO A CLEARLY LABELED, SEALABLE PLASTIC BIN, TO AVOID SPILLAGE.
   I. PAINTS, SOLVENTS:
   1) ALL PAINTS AND SOLVENTS SHALL BE STORED IN ORIGINAL MANUFACTURER'S CONTAINERS IN A COVERED LOCATION.
   2) THE USE OF PAINTS AND SOLVENTS SHALL, WHENEVER POSSIBLE, BE LIMITED TO SERVICE OR STORAGE BAYS AND NOT IN PARKING OR ACCESS WAYS THAT ARE TRIBUTARY TO THE DRAINAGE SYSTEM.
2. SPILL CONTROL PRACTICES:
   A. MANUFACTURER'S RECOMMENDED METHODS SHALL BE CLEARLY POSTED FOR SPILL CLEAN-UP AND SITE PERSONNEL SHALL BE MADE AWARE OF THE PROCEDURES AND THE LOCATIONS OF CLEAN-UP INFORMATION AND SUPPLIES.
   B. MATERIAL AND EQUIPMENT NECESSARY FOR SPILL CLEAN-UP WILL BE KEPT ON-SITE IN A DESIGNATED MATERIAL STORAGE AREA. EQUIPMENT WILL INCLUDE, BUT NOT BE LIMITED TO, BROOMS, DUST PANS , MOPS, RAGS, GLOVES, GOGGLES, ABSORBENT MATERIALS, SAND, SAWDUST AND PLASTIC & METAL TRASH CONTAINERS SPECIFICALLY KEPT AND LABELED FOR THIS PURPOSE.
   C. ALL SPILLS WILL BE CLEANED-UP IMMEDIATELY AFTER DISCOVERY.
   D. SPILLS OF TOXIC OR HAZARDOUS MATERIAL OR NATURE WILL BE REPORTED TO THE APPROPRIATE STATE, LOCAL OR FEDERAL AGENCY, AS REQUIRED BY-LAW.
   E. THE SPILL PREVENTION PLAN WILL INCLUDE PROVISIONS TO ADAPT THE PLAN TO ENSURE THAT SPILLS WILL NOT REOCCUR, AND HOW TO CLEANUP THE SPILL IF THERE IS ANOTHER ONE.
3. SITE OPERATIONS AND DAILY USE SHALL CONSIDER THE ULTIMATE DISPOSITION OF STORMWATER AND OTHER SITE-GENERATED FORMS OF RUNOFF. THE WASHING OF VEHICLES SHALL BE LIMITED AREAS WITHIN THE BUILDING, AS THEY ARE SERVED BY THE FLOOR DRAIN SYSTEM. WASH WATER WITH ITS COMBINATION OF SOLVENTS, DETERGENTS AND OIL/GREASES SHOULD NOT BE ALLOWED TO ENTER ANY PART OF THE ON-SITE DRAINAGE SYSTEM.
4. SNOW PLOWING - SNOW PLOWING OPERATIONS SHALL STOCKPILE SNOW, ICE AND ACCUMULATED MATERIALS IN AREAS WHERE SNOW MELT WILL FLOW INTO THE ON-SITE DRAINAGE SYSTEMS, INCLUDING DRAINAGE BASINS. NO PLOWING OR STORAGE OF SNOW INTO WETLANDS OR AREAS DRAINING TO WETLAND.
5. SALT USE SITE-WIDE SHALL BE APPLIED TO THE MINIMUM EXTENT POSSIBLE TO MAINTAIN SAFE CONDITIONS, AND ONLY IF NOT SPECIFICALLY EXCLUDED BY ANY SPECIAL CONDITIONS AS PART OF AN ORDER OF CONDITIONS ISSUED BY THE CONSERVATION COMMISSION.

MAINTENANCE:

1. PARKING AREAS, ROAD AND ACCESS WAYS AND GUTTERS SHALL BE SWEPT CLEAN OF DEBRIS AND ACCUMULATION ON A REGULAR BASIS. AT A MINIMUM, A SPRING AND FALL CLEANING SCHEDULE IS RECOMMENDED.
2. ALL CATCHBASINS SHALL HAVE THE SUMPS CLEANED AT ANY TIME OF THE YEAR WHEN 2' OR LESS SPACE EXISTS BELOW THE OUTLET INVERT, OR A MINIMUM OF ONCE PER YEAR, REGARDLESS OF SUMP ACCUMULATION. ALL DEBRIS FROM THE CLEANING SHALL BE DISPOSED OF OFF-SITE AND IN A MANNER AS PROSCRIBED BY LAW.
3. ALL HYDROCARBON TRAPS SHALL BE CHECKED FOR PHYSICAL INTEGRITY AND SEALED IMMEDIATELY AFTER EACH CATCHBASIN CLEANING.
4. OIL ABSORBING "PILLOWS" OR OTHER MEANS SHALL BE USED TO REMOVE ACCUMULATIONS OF HYDROCARBONS (OIL/GREASE) IN CATCHBASINS THAT ARE REGULARLY OBSERVED TO CONTAIN HYDROCARBONS, WHICH DO NOT EVAPORATE BETWEEN INSPECTIONS.
5. ALL BROKEN, LEAKING OR OTHERWISE DAMAGED STRUCTURES SHALL BE REPAIRED PROMPTLY UPON DISCOVERY. CATCHBASIN GRATES OR MANHOLE LIDS SHALL BE REPLACED WITH SIMILAR WEIGHT AND LOADING CHARACTERISTIC REPLACEMENT PARTS.
6. ALL EROSION SHALL BE REPAIRED. THE REPLACEMENT OF ANY PIPE OR DRAINAGE STRUCTURE SHALL MATCH THE ORIGINAL DESIGN SPECIFICATIONS.

FOR PERMITTING PURPOSES ONLY
NOT FOR CONSTRUCTION

TEMPORARY STOCKPILE
NOT TO SCALE

FILTERED CATCHBASIN
NOT TO SCALE

INLET SEDIMENT CONTROL DEVICE
NOT TO SCALE

REVISIONS:
8-2-06 REVISIONS PER REVIEW COMMENTS

EROSION AND SEDIMENTATION CONTROL PLAN

Senior Residence Development

40B Development Plan in
ACTON & WESTFORD, MASS.

PREPARED FOR:
Woodlands at Laurel Hill, LLC
676 ELM STREET, SUITE 300
CONCORD, MA 01801

SCALE: AS SHOWN DATE: June 8, 2006

PLACES Site Consultants, Inc.
PLANNING LANDSCAPE ARCHITECTURE CIVIL ENGINEERING SURVEYING
694 MAIN STREET, SUITE 3
HOLDEN, MA 01520-1862
508.829.0333 Fax 508.829.0904
EMAIL places@verizon.net

PROJECT No.: 05-349 PLAN No. 349-0-6

Deciduous Tree

Code Name	Quantity	Scientific Name	Common Name	Planting Size
AR	12	Acer rubrum	Red maple	3-3½" cal.
FA	14	Fraxinus americana	White ash	3-3½" cal.
PA	8	Platanus acerifolia	London plane tree	3-3½" cal.
PC	14	Pyrus calleryana 'Chanticleer'	Chanticleer Pear	3-3½" cal.
QA	5	Quercus alba	White oak	3-3½" cal.
QR	7	Quercus rubra	Northern red oak	3-3½" cal.

Conifer Evergreen

Code Name	Quantity	Scientific Name	Common Name	Planting Size
PS	34	Pinus strobus / Pinus nigra	White / Austrian pine	8-10' ht.

Hawk Design, Inc.
Landscape Architecture
Land Planning
Boston, MA
617-242-[illegible]

Date: 5/30/06

Revisions:
Num.	Date	Description
1	7/26/06	Addition of Community Garden

The Woodlands at Laurel Hill
Acton / Westford, MA
Woodlands at Laurel Hill LLC

Landscape Common Area Planting Plan

Scale: 1" = 30'-0"

Sheet: L1