CHURCH OF THE GOOD SHEPHERD

164 NEWTOWN ROAD
ACTON, MA 01720

4BN-0327-A

RAW LAND

GENERAL NOTES

1. THE CONTRACTOR SHALL GIVE ALL NOTICES AND COMPLY WITH ALL LAWS, ORDINANCES, RULES, REGULATIONS AND LAWFUL ORDERS OF ANY PUBLIC AUTHORITY, MUNICIPAL AND UTILITY COMPANY SPECIFICATIONS, AND LOCAL AND STATE JURISDICTIONAL CODES BEARING ON THE PERFORMANCE OF THE WORK. THE WORK PERFORMED ON THE PROJECT AND THE MATERIALS INSTALLED SHAL BE IN STRICT ACCORDANCE WITH ALL APPLICABLE CODES, REGULATIONS, AND ORDINANCES.

2. THE ARCHITECT/ENGINEER HAS MADE EVERY EFFORT TO SET FORTH IN THE CONSTRUCTION AND CONTRACT DOCUMENTS THE COMPLETE SCOPE OF WORK. THE CONTRACTOR BIDDING THE JOB IS NEVERTHELESS CAUTIONED THAT MINOR OMISSIONS OR ERRORS IN THE DRAWINGS AND OR SPECIFICATIONS SHALL NOT EXCUSE SAID CONTRACTOR FROMCOMPLETING THE PROJECT AND IMPROVEMENTS IN ACCORDANCE WITH THE INTENT OF THESE DOCUMENTS.

3. THE CONTRACTOR OR BIDDER SHALL BEAR THE RESPONSIBILITY OF NOTIFYING (IN WRITING) THE PROJECT OWNER REPRESENTATIVE OF ANY CONFLICTS, ERRORS, OR OMISSIONS PRIOR TO THE SUBMISSION OF CONTRACTOR'S PROPOSAL OR PERFORMANCE OF WORK. IN THE EVENT OF DISCREPANCIES THE CONTRACTOR SHALL PRICE THE MORE COSTLY OR EXTENSIVE WORK, UNLESS DIRECTED IN WRITING OTHERWISE.

4. THE SCOPE OF WORK SHALL INCLUDE FURNISHING ALL MATERIALS, EQUIPMENT, LABOR AND ALL OTHER MATERIALS AND LABOR DEEMED NECESSARY TO COMPLETE THE WORK/PROJECT AS DESCRIBED HEREIN.

5. THE CONTRACTOR SHALL VISIT THE JOB SITE PRIOR TO THE SUBMISSION OF BIDS OR PERFORMING WORK TO FAILIARIZE HIMSELF WITH THE FIELD CONDITIONS AND TO VERIFY THAT THE PROJECT CAN BE CONSTRUCTED IN ACCORDANCE WITH THE CONTRACT DOCUMENTS.

6. THE CONTRACTOR SHALL OBTAIN AUTHORIZATION TO PROCEED WITH CONSTRUCTION PRIOR TO STARTING WORK ON ANY ITEM NOT CLEARLY DEFINED BY THE CONSTRUCTION DRAWINGS / CONTRACT DOCUMENTS.

7. THE CONTRACTOR SHALL INSTALL ALL EQUIPMENT AND MATERIALS ACCORDING TO THE MANUFACTURER'S / VENDOR'S SPECIFICATIONS UNLESS NOTED OTHERWISE OR WHERE LOCAL CODES OR ORDINANCES TAKE PRECEDENCE.

8. THE CONTRACTOR SHALL PROVIDE A FULL SET OF CONSTRUCTION DOCUMENTS AT THE SITE UPDATED WITH THE LATEST REVISIONS AND ADDENDUMS OR CLARIFICATIONS AVAILABLE FOR THE USE BY ALL PERSONNEL INVOLVED WITH THE PROJECT.

9. THE CONTRACTOR SHALL SUPERVISE AND DIRECT THE PROJECT DESCRIBED HEREIN. THE CONTRACTOR SHALL BE SOLELY RESPONSIBLE FOR ALL CONSTRUCTION MEANS, METHODS, TECHNIQUES, SEQUENCES AND PROCEDURES AND FOR COORDINATING ALL PORTIONS OF THE WORK UNDER THE CONTRACT.

10. THE CONTRACTOR IS RESPONSIBLE FOR PROVIDING ALL NECESSARY CONSTRUCTION CONTROL SURVEYS, ESTABLISHING AND MAINTAINING ALL LINES AND GRADES REQUIRED TO CONSTRUCT ALL IMPROVEMENTS AS SHOWN HEREIN.

11. THE CONTRACTOR SHALL BE RESPONSIBLE FOR OBTAINING ALL PERMITS AND INSPECTIONS WHICH MAY BE REQUIRED FOR THE WORK BY THE ARCHITECT/ENGINEER, THE STATE, COUNTY OR LOCAL GOVERNMENT AUTHORITY.

12. THE CONTRACTOR SHALL MAKE ALL NECESSARY PROVISIONS TO PROTECT EXISTING IMPROVEMENTS, EASEMENTS, PAVING, CURBING, ETC. DURING CONSTRUCTION. UPON COMPLETION OF WORK, THE CONTRACTOR SHALL REPAIR ANY DAMAGE THAT MAY HAVE OCCURRED DUE TO CONSTRUCTION ON OR ABOUT THE PROPERTY.

13. THE CONTRACTOR SHALL KEEP THE GENERAL WORK AREA CLEAN AND HAZARD FREE DURING CONSTRUCTION AND DISPOSE OF ALL DIRT, DEBRIS, RUBBISH AND REMOVE EQUIPMENT NOT SPECIFIED AS REMAINING ON THE PROPERTY. PREMISES SHALL BE LEFT IN CLEAN CONDITION AND FREE FROM PAINT SPOTS , DUST, OR SMUDGES OF ANY NATURE.

14. THE CONTRACTOR SHALL COMPLY WITH ALL OSHA REQUIREMENTS AS THEY APPLY TO THIS PROJECT.

15. THE CONTRACTOR SHALL NOTIFY THE PROJECT OWNER REPRESENTITIVE WHERE A CONFLICT OCCURS ON ANY OF THE CONTRACT DOCUMENTS. THE CONTRACTOR IS NOT TO ORDER MATERIAL OR CONSTRUCT ANY PORTION OF THE WORK THAT IS IN CONFLICT UNTIL CONFLICT IS RESOLVED BY THE PROJECT OWNER REPRESENTITIVE.

16. THE CONTRACTOR SHALL VERIFY ALL DIMENSIONS, ELEVATION, PROPERTY LINES, ETC. ON THE JOB.

17. ALL UNDERGROUND UTILITY INFORMATION WAS DETERMINED FROM SURFACE INVESTIGATIONS AND EXISTING PLANS OF RECORD. THE CONTRACTOR SHALL LOCATE ALL UNDERGROUND UTILITIES IN THE FIELD PRIOR TO ANY SITE WORK. CALL DIG-SAFE AT 1-888-DIG-SAFE (1-888-344-7233) A MINIMUM OF 72 HOURS PRIOIR TO PLANNED ACTIVITY.

18. PER FCC MANDATE, ENHANCED EMERGENCY (E911) SERVICE IS REQUIRED TO MEET NATIONWIDE STANDARDS FOR WIRELESS COMMUNICATIONS SYSTEMS. PROJECT OWNER IMPLEMENTATION REQUIRES DEPLOYMENT OF EQUIPMENT AND ANTENNAS GENERALLY DEPICTED ON THIS PLAN, ATTACHED TO OR MOUNTED IN CLOSE PROXIMITY TO THE BTS RADIO CABINETS. THE PROJECT OWNER RESERVES THE RIGHT TO MAKE REASONABLE MODIFICATIONS TO E911 EQUIPMENT AND LOCATION AS TECHNOLOGY EVOLVES TO MEET REQUIRED SPECIFICATIONS.

VICINITY MAP

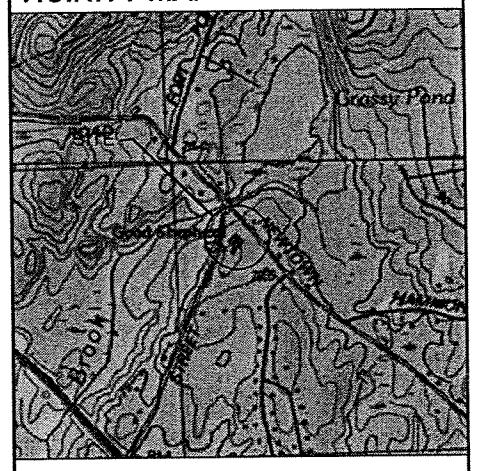

VICINITY MAP
APPROX. SCALE: 1" = 1000' N

DO NOT SCALE DRAWINGS

CONTRACTOR SHALL VERIFY ALL PLANS AND EXISTING DIMENSIONS AND CONDITIONS ON THE JOB SITE AND SHALL IMMEDIATELY NOTIFY THE PROJECT OWNER'S REPRESENTATIVE IN WRITING OF DISCREPANCIES BEFORE PROCEEDING WITH THE WORK OR BE RESPONSIBLE FOR SAME

SHEET INDEX

SHT. NO.	DESCRIPTION	REV. NO.
T-1	TITLE SHEET	2
C-1	SURVEY PLAN	2
A-1	VICINITY PLAN	2
Z-1	COMPOUND PLAN AND ELEVATION	2
Z-2	DETAILS	2

PROJECT SUMMARY

SITE NUMBER:	4BN-0327-A
SITE NAME:	CHURCH OF THE GOOD SHEPHERD
SITE ADDRESS:	164 NEWTOWN ROAD ACTON, MA 01720
ZONING DISTRICT:	RESIDENCE 4 (R-4)
ASSESSOR'S PARCEL NO.:	MAP: D3, BLOCK: 13
DEED REFERENCE:	BOOK: 12203 PAGE: 639
CONSTRUCTION TYPE:	RAW LAND
PROPERTY OWNER:	CHURCH OF THE GOOD SHEPHERD 164 NEWTOWN ROAD ACTON, MA 01720
APPLICANT:	OMNIPOINT COMMUNICATIONS, INC. 15 COMMERCE WAY, SUITE B NORTON, MA 02766

OMNIPOINT COMMUNICATIONS, INC.
A WHOLLY OWNED SUBSIDIARY OF
T-MOBILE USA, INC.

15 COMMERCE WAY, SUITE B
NORTON, MA 02766

OFFICE: (508) 286-2700
FAX: (508) 286-2893

AERIAL SPECTRUM TECHNOLOGIES

1 General Way
Reading, MA 01867
tel. (781) 942 0024
fax (781) 942 0551
e-mail mitch@aerialspectrum.com

COMMONWEALTH OF MASSACHUSETTS
EAMONN T. KELLEHAN
No. 49123
REGISTERED PROFESSIONAL ENGINEER

APPROVALS

LANDLORD _____
LEASING _____
R.F. _____
ZONING _____
CONSTRUCTION _____
A/E _____

PROJECT NO: 4BN-0327-A

DRAWN BY: JWM/MAP

CHECKED BY: PLM

SUBMITTALS

2	06/23/06	ZONING REVISED
1	06/16/06	ZONING FINAL
0	06/07/06	ZONING

THIS DOCUMENT IS THE CREATION, DESIGN, PROPERTY AND COPYRIGHTED WORK OF OMNIPOINT COMMUNICATIONS, INC.. ANY DUPLICATION OR USE WITHOUT EXPRESS WRITTEN CONSENT IS STRICTLY PROHIBITED. DUPLICATION AND USE BY GOVERNMENT AGENCIES FOR THE PURPOSES OF CONDUCTING THEIR LAWFULLY AUTHORIZED REGULATORY AND ADMINISTRATIVE FUNCTIONS IS SPECIFICALLY ALLOWED.

4BN-0327-A
CHURCH OF THE GOOD SHEPHERD
164 NEWTOWN ROAD
ACTON, MA 01720

SHEET TITLE

TITLE SHEET

SHEET NUMBER

T-1

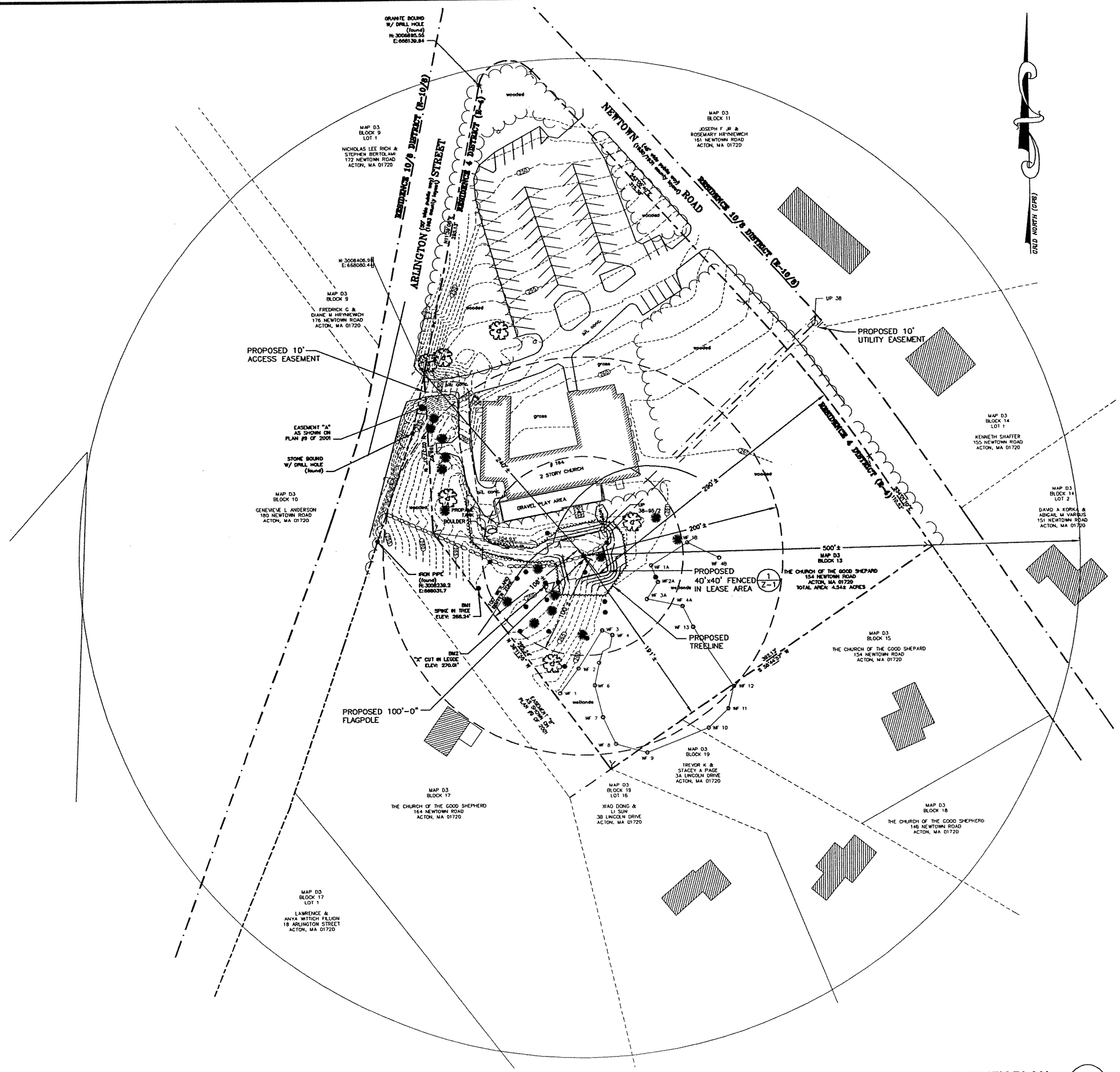

SURVEY PLAN
SCALE: 1"=50'

1 / C-1

50 0 25 50 100 200

LEGEND

- PROPERTY LINE - SUBJECT PARCEL
- PROPERTY LINE - ABBUTTER
- RIGHT-OF-WAY
- TREES - 12" TO 17"
- TREES - 18" TO 23"
- TREES - 24" AND GREATER
- (E) BUILDINGS

ZONING INFORMATION

JURISDICTION:	TOWN OF ACTON, MA - MIDDLESEX COUNTY	
ZONING DISTRICT TYPE:	RESIDENCE 4 (R-4)	
DIMENSION REQUIREMENTS:	REQUIRED	PROPOSED
MINIMUM LOT AREA:	40,000 SQ. FT.	198,000 SQ. FT.
MINIMUM ROAD FRONTAGE:	175'	983.97'
FRONT YARD SETBACK:	45'	240'
SIDE YARD SETBACK:	20'	106'
REAR YARD SETBACK:	20'	191'
MAXIMUM BUILDING HEIGHT:	36'	N/A
MAXIMUM LOT COVERAGE:	NR	NR

(ALL MEASUREMENTS ARE IN FEET± UNLESS OTHERWISE NOTED)
(SETBACKS ARE TO PROPOSED TOWER UNLESS OTHERWISE NOTED)

SURVEY INFORMATION

1. DATE OF SURVEY: MAY 31, 2006

2. SITE OWNER & MAILING ADDRESS: CHURCH OF THE GOOD SHEPHERD, 164 NEWTOWN ROAD, ACTON, MA 01720

3. CENTER OF TOWER: LATITUDE: N 42° 29' 51" (NAD 83); LONGITUDE: W 71° 27' 19" (NAD 83); ELEVATION: 249'± AMSL (NAVD 88)

4. VERTICAL DATUM: NORTH AMERICA VERTICAL DATUM OF 1988 PER TOPCON HYPER PLUS GPS READINGS

5. HORIZONTAL DATUM: NORTH AMERICAN DATUM OF 1983 (NAD 83) PER TOPCON HYPER PLUS GPS READINGS

6. THIS PLAN IS NOT THE RESULT OF A FULL BOUNDARY SURVEY. IT IS THE RESULT OF COMPILATION OF RECORD INFORMATION AND LOCATION OF AVAILABLE MONUMENTATION. THIS SURVEY IS SUBJECT TO ANY CONDITIONS THAT A FULL BOUNDARY SURVEY MAY REVEAL.

7. THE PROPERTY LINES SHOWN HEREON ARE THE LINES DIVIDING EXISTING OWNERSHIPS, THE LINES OF THE STREET OR WAYS ALREADY ESTABLISHED AND THAT NO NEW LINES FOR THE DIVISION OF EXISTING OWNERSHIP OR FOR NEW WAYS ARE SHOWN.

8. ALL UNDERGROUND UTILITY INFORMATION SHOWN HEREON WAS DETERMINED FROM SURFACE EVIDENCE. ALL UNDERGROUND UTILITIES SHOULD BE LOCATED IN THE FIELD PRIOR TO COMMENCEMENT OF ALL SITE WORK. CALL DIGSAFE AT 1-800-DIG-SAFE A MINIMUM OF 72 HOURS PRIOR TO PLANNED ACTIVITY.

9. ALL ABUTTERS OF LOCUS ARE SHOWN FROM AVAILABLE ASSESSORS' INFORMATION.

10. NO PART OF THE LEASE AREA LIES WITHIN 100 YEAR FLOOD ZONE AS SHOWN ON FLOOD INSURANCE RATE MAP - TOWN OF ACTON, MA - MIDDLESEX COUNTY COMMUNITY PANEL NUMBER: 250176000 2C EFFECTIVE DATE: JANUARY 6, 1988

11. ALL WETLANDS WITHIN 100' OF PROPOSED LEASE AREA AND EASEMENTS SHOWN HEREON.

12. NO PART OF THE LEASE AREA LIES WITHIN 500 FEET OF THE HISTORIC PROPERTY/DISTRICT BOUNDARY.

PLAN REFERENCES

1. BEARINGS BASED ON: TRUE NORTH (GPS)

2. DEED REFERENCE: DEED BOOK: 12203, PAGE: 639

3. PLAN REFERENCE: PLAN #: 9 OF 2001

FAA 2C CERTIFICATION

I HEREBY CERTIFY THAT THE LATITUDE, LONGITUDE AND ELEVATIONS PRESENTED HEREON MEETS THE REQUIREMENTS OF THE FAA WITH THE FOLLOWING ACCURACIES:

+/- TWENTY (20) FEET VERTICALLY
+/- FIFTY (50) FEET HORIZONTALLY

Robert E. Bisnette — 6-22-06
DATE

OMNIPOINT COMMUNICATIONS, INC.
A WHOLLY OWNED SUBSIDIARY OF T-MOBILE USA, INC.
15 COMMERCE WAY, SUITE B
NORTON, MA 02766
OFFICE: (508) 286-2700
FAX: (508) 286-2893

AERIAL SPECTRUM
1 General Way
Reading, MA 01867
tel. (781) 942 0024
fax (781) 942 0551
e-mail mitch@aerialspectrum.com

COMMONWEALTH OF MASSACHUSETTS — ROBERT EDWARD BISSONNETTE — NO. 31961 — REGISTERED PROFESSIONAL ENGINEER

COMMONWEALTH OF MASSACHUSETTS — EAMONN KELLIHAN — No. 49122 — REGISTERED PROFESSIONAL ENGINEER

APPROVALS

LANDLORD _____
LEASING _____
R.F. _____
ZONING _____
CONSTRUCTION _____
A/E _____

PROJECT NO: 4BN-0327-A
DRAWN BY: JWM/MAP
CHECKED BY: PLM

SUBMITTALS

2	06/23/06	ZONING REVISED
1	06/16/06	ZONING FINAL
0	06/07/06	ZONING

THIS DOCUMENT IS THE CREATION, DESIGN, PROPERTY AND COPYRIGHTED WORK OF OMNIPOINT COMMUNICATIONS, INC.. ANY DUPLICATION OR USE WITHOUT EXPRESS WRITTEN CONSENT IS STRICTLY PROHIBITED. DUPLICATION AND USE BY GOVERNMENT AGENCIES FOR THE PURPOSES OF CONDUCTING THEIR LAWFULLY AUTHORIZED REGULATORY AND ADMINISTRATIVE FUNCTIONS IS SPECIFICALLY ALLOWED.

4BN-0327-A
CHURCH OF THE GOOD SHEPHERD
164 NEWTOWN ROAD
ACTON, MA 01720

SHEET TITLE
SURVEY PLAN

SHEET NUMBER
C-1

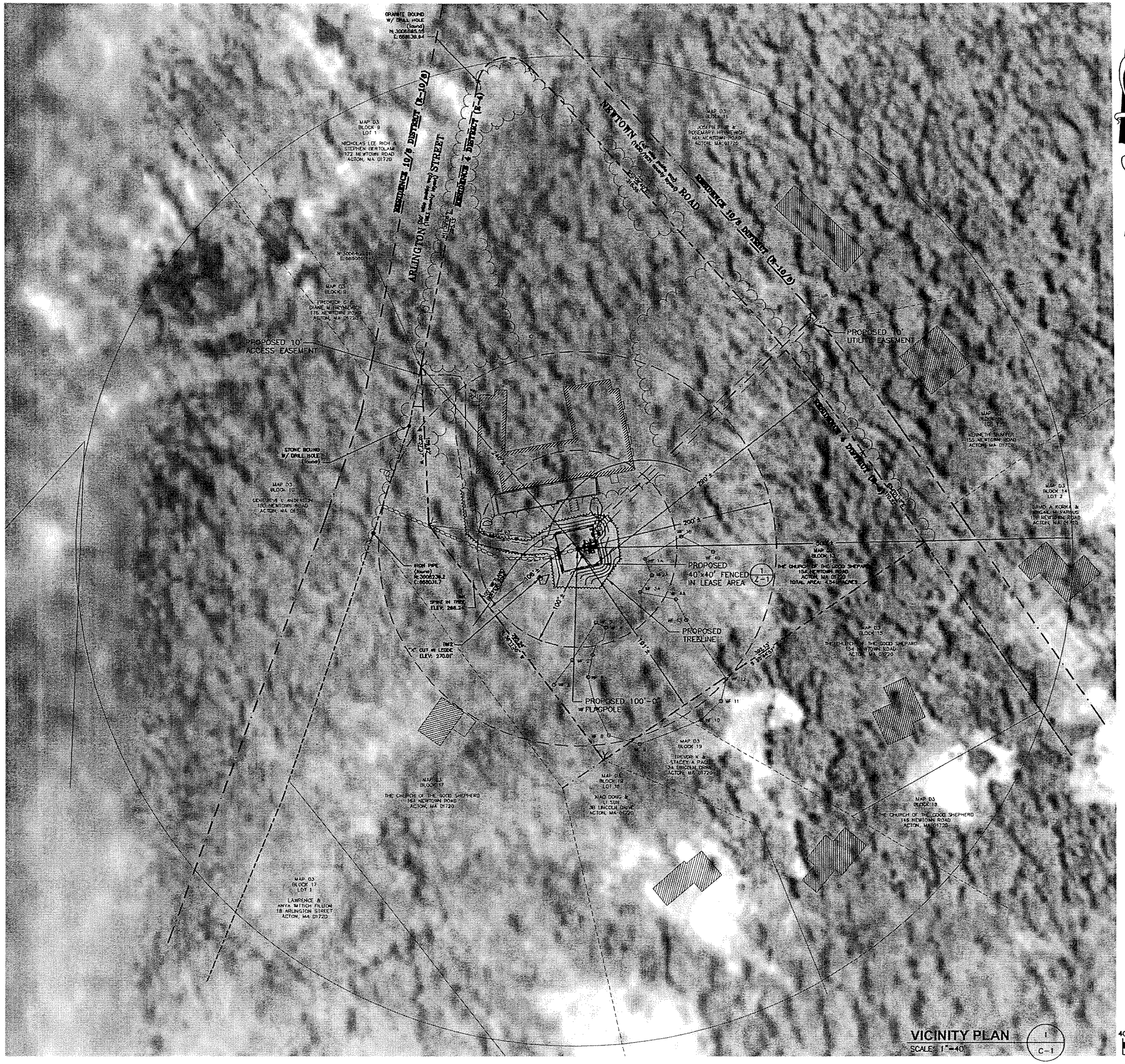

GENERAL NOTES

1. THE TYPE, DIMENSIONS, MOUNTING HARDWARE, AND POSITIONS OF ALL PROJECT OWNER'S EQUIPMENT ARE SHOWN IN ILLUSTRATIVE FASHION. THESE DRAWINGS ARE NOT INTENDED FOR CONSTRUCTION. ACTUAL HARDWARE DETAILS AND FINAL LOCATIONS MAY DIFFER SLIGHTLY FROM WHAT IS SHOWN.

2. THE PROJECT OWNER'S PCS FACILITY IS AN UNMANNED PRIVATE AND SECURED EQUIPMENT INSTALLATION. IT IS ONLY ACCESSED BY TRAINED TECHNICIANS FOR PERIODIC ROUTINE MAINTENANCE AND THEREFORE DOES NOT REQUIRE ANY WATER OR SANITARY SEWER SERVICE. THE FACILITY IS NOT GOVERNED BY REGULATIONS REQUIRING PUBLIC ACCESS PER ADA REQUIREMENTS.

3. THE PROJECT OWNER'S BASE TRANSMISSION STATION (BTS) CABINET IS A WEATHER RESISTANT, VANDAL RESISTANT STEEL CABINET CONTAINING RECTIFIERS, AMPLIFIERS, RADIOS, AND OTHER INTEGRATED ELECTRONIC CONTROL EQUIPMENT. THE BTS IS ENVIRONMENTALLY CONTROLLED BY A SELF-CONTAINED AC-POWERED HEATING AND COOLING SYSTEM USING CFC-FREE THERMAL TRANSFER COMPOUNDS. MANUFACTURER'S SPECIFICATIONS INDICATE THAT AT FULL LOAD CONDITIONS, MAXIMUM ACOUSTICAL NOISE LEVELS ARE 50DB(A) AT A DISTANCE OF 13 FEET AND 40 DB(A) AT A DISTANCE OF 46 FEET. BATTERY BACKUP FOR EMERGENCY STANDBY POWER IS CONTAINED WITHIN THE SEALED BTS CABINET AND CONSISTS OF EIGHT 12-VOLT, CLOSED-CELL DC BATTERIES PLUS A SEPARATE BATTERY BACKUP UNIT WITH SIXTEEN BATTERIES (SITE TOTAL OF 40 BATTERIES). THE BATTERIES ARE LEAD-ACID RECHARGEABLE STANDBY INDUSTRIAL POWER CELLS MANUFACTURED TO MEET ENVIRONMENTAL QUALITY AND RUGGEDNESS STANDARDS OF THE INTERNATIONAL AIR TRANSPORT ASSOCIATION (IATA). THE BATTERY CHARGING SYSTEM IS COMPUTER-CONTROLLED AND THE EQUIPMENT CABINET IS REMOTELY MONITORED AT THE PROJECT OWNER'S NETWORK OPERATIONS CONTROL CENTER 24-HOURS A DAY, 7 DAYS A WEEK FOR FAULTS AND ALARMS.

4. THE DESIGN OF THE TOWER, FOUNDATION AND ANTENNA MOUNTING HARDWARE WILL MEET THE ANSI/EIA/TIA-222-G STANDARDS FOR STRUCTURAL STEEL ANTENNA SUPPORTING STRUCTURES AND STATE BUILDING CODE REQUIREMENTS. DETAILED CONSTRUCTION DRAWINGS AND STRUCTURAL CALCULATIONS WILL BE PREPARED BY A REGISTERED PROFESSIONAL ENGINEER AND SUBMITTED WITH A BUILDING PERMIT APPLICATION FOR REVIEW AND APPROVAL BY THE LOCAL BUILDING CODE ENFORCEMENT OFFICIAL.

5. ONCE THE FACILITY BECOMES FULLY OPERATIONAL, NORMAL AND ROUTINE MAINTENANCE BY PROJECT OWNER'S TECHNICIANS WILL BE PERFORMED ON A MONTHLY BASIS. THEREFORE, THE ESTIMATED VEHICLE TRIP GENERATION RATE IS 2 TRIPS PER MONTH. THE AVERAGE DAILY TRIP GENERATION RATE (ADT) IS 0.07.

6. PER FCC MANDATE, ENHANCED EMERGENCY (E911) SERVICE IS REQUIRED TO MEET NATIONWIDE STANDARDS FOR WIRELESS COMMUNICATIONS SYSTEMS. PROJECT OWNER'S IMPLEMENTATION REQUIRES DEPLOYMENT OF EQUIPMENT AND ANTENNAS GENERALLY DEPICTED ON THIS PLAN, ATTACHED TO OR MOUNTED IN CLOSE PROXIMITY TO THE BTS RADIO CABINETS. PROJECT OWNER'S RESERVES THE RIGHT TO MAKE REASONABLE MODIFICATIONS TO E911 EQUIPMENT AND LOCATION AS TECHNOLOGY EVOLVES TO MEET REQUIRED FEDERALLY MANDATED ACCURACY SPECIFICATIONS.

7. PERMANENT STANDBY EMERGENCY POWER WILL NOT BE UTILIZED BY PROJECT OWNER. IF NECESSARY, DURING AN EXTENDED POWER OUTAGE, A PORTABLE EMERGENCY GENERATOR WILL BE USED TO PROVIDE TEMPORARY EMERGENCY BACKUP POWER. THERE IS NO ON-SITE BULK STORAGE OF FLAMMABLE OR COMBUSTIBLE FUELS FOR OPERATING AN EMERGENCY GENERATOR FOR THE PROJECT OWNER'S EQUIPMENT.

8. MARKING AND LIGHTING OF THE TOWER, IF REQUIRED BY THE FAA, WILL BE DONE IN ACCORDANCE WITH THE RECOMMENDATIONS OF AN AIRSPACE SAFETY CONSULTANT AND WILL MEET ALL DESIGN GUIDELINES IN FAA AC 70/7460-1K. IF DAYTIME FAA OBSTRUCTION MARKING IS USED, PAINT ANTENNAS, MOUNTING HARDWARE, AND EXPOSED VERTICAL CABLE RUNS TO MATCH EXISTING TOWER BACKGROUND PATTERN (AVIATION ORANGE OR WHITE.)

9. THE TOTAL IMPACT AREA OF THE DISTURBED CONSTRUCTION SITE IS BOUNDED BY THE "LIMIT OF WORK" AS SHOWN HEREON. THE MAXIMUM AREA OF DISTURBANCE WITHIN THE LIMIT OF WORK IS APPROXIMATELY 5,400 SQUARE FEET. THE PROJECT IMPACT AREA IS BELOW THE EXEMPTION THRESHOLD OF 43,560 SQUARE FEET IN 40 CFR PARTS 9, 122-124 AND THEREFORE IS NOT SUBJECT TO REGULATION UNDER THE EPA OR STATE-MANAGED NPDES GENERAL CONSTRUCTION PERMIT PROGRAM. THE PROJECT OWNER'S GENERAL CONTRACTOR SHALL CONDUCT ALL SITE DEVELOPMENT WORK IN A MANNER THAT DOES NOT EXCEED THE LIMITS OF WORK SHOWN ON THE PLANS. ADDITIONALLY, THE PROJECT OWNER'S GENERAL CONTRACTOR SHALL CONDUCT ALL CONSTRUCTION ACTIVITIES IN A MANNER THAT DOES NOT RESULT IN STORM WATER DISCHARGES WITH AN ADVERSE IMPACT ON ANY STORM WATER COLLECTION/CONVEYANCE SYSTEM, WETLAND, WATER BODY, OR OTHER WATER RESOURCE AREAS.

10. APPLICANT:	OMNIPOINT COMMUNICATIONS, INC. 15 COMMERCE WAY, SUITE B NORTON, MA 02766
11. OWNER:	CHURCH OF THE GOOD SHEPHERD 164 NEWTOWN ROAD ACTON, MA 01720
12. ZONING DISTRICT:	RESIDENCE 4 (R-4)
13. JURISDICTION:	TOWN OF ACTON, MA - MIDDLESEX COUNTY
14. TAX ID:	MAP: D3, BLOCK: 13

LEGEND

- 200' PROPERTY LINE OFFSET
- 100' TOWER LINE OFFSET
- PROPERTY LINE - SUBJECT PARCEL
- PROPERTY LINE - ABBUTTER
- RIGHT-OF-WAY
- EXISTING WELL
- TREES 12 TO 17"
- TREES 18 TO 24"
- TREES GREATER THAN 24"
- (E) BUILDINGS

OMNIPOINT COMMUNICATIONS, INC.
A WHOLLY OWNED SUBSIDIARY OF
T-MOBILE USA, INC.

15 COMMERCE WAY, SUITE B
NORTON, MA 02766

OFFICE: (508) 286-2700
FAX: (508) 286-2893

AERIAL SPECTRUM

1 General Way
Reading, MA 01867
tel. (781) 942 0024
fax (781) 942 0551
e-mail mitch@
aerialspectrum.com

SAMUEL L. MCENANEY
COMMONWEALTH OF MASSACHUSETTS
No. 49123
REGISTERED PROFESSIONAL ENGINEER

APPROVALS

LANDLORD _____

LEASING _____

R.F. _____

ZONING _____

CONSTRUCTION _____

A/E _____

PROJECT NO: 4BN-0327-A

DRAWN BY: JWM/MAP

CHECKED BY: PLM

SUBMITTALS

2	06/23/06	ZONING REVISED
1	06/16/06	ZONING FINAL
0	06/07/06	ZONING

THIS DOCUMENT IS THE CREATION, DESIGN, PROPERTY AND COPYRIGHTED WORK OF OMNIPOINT COMMUNICATIONS, INC.. ANY DUPLICATION OR USE WITHOUT EXPRESS WRITTEN CONSENT IS STRICTLY PROHIBITED. DUPLICATION AND USE BY GOVERNMENT AGENCIES FOR THE PURPOSES OF CONDUCTING THEIR LAWFULLY AUTHORIZED REGULATORY AND ADMINISTRATIVE FUNCTIONS IS SPECIFICALLY ALLOWED.

4BN-0327-A
CHURCH OF THE
GOOD SHEPHERD
164 NEWTOWN ROAD
ACTON, MA 01720

SHEET TITLE

VICINITY PLAN

SHEET NUMBER

A-1

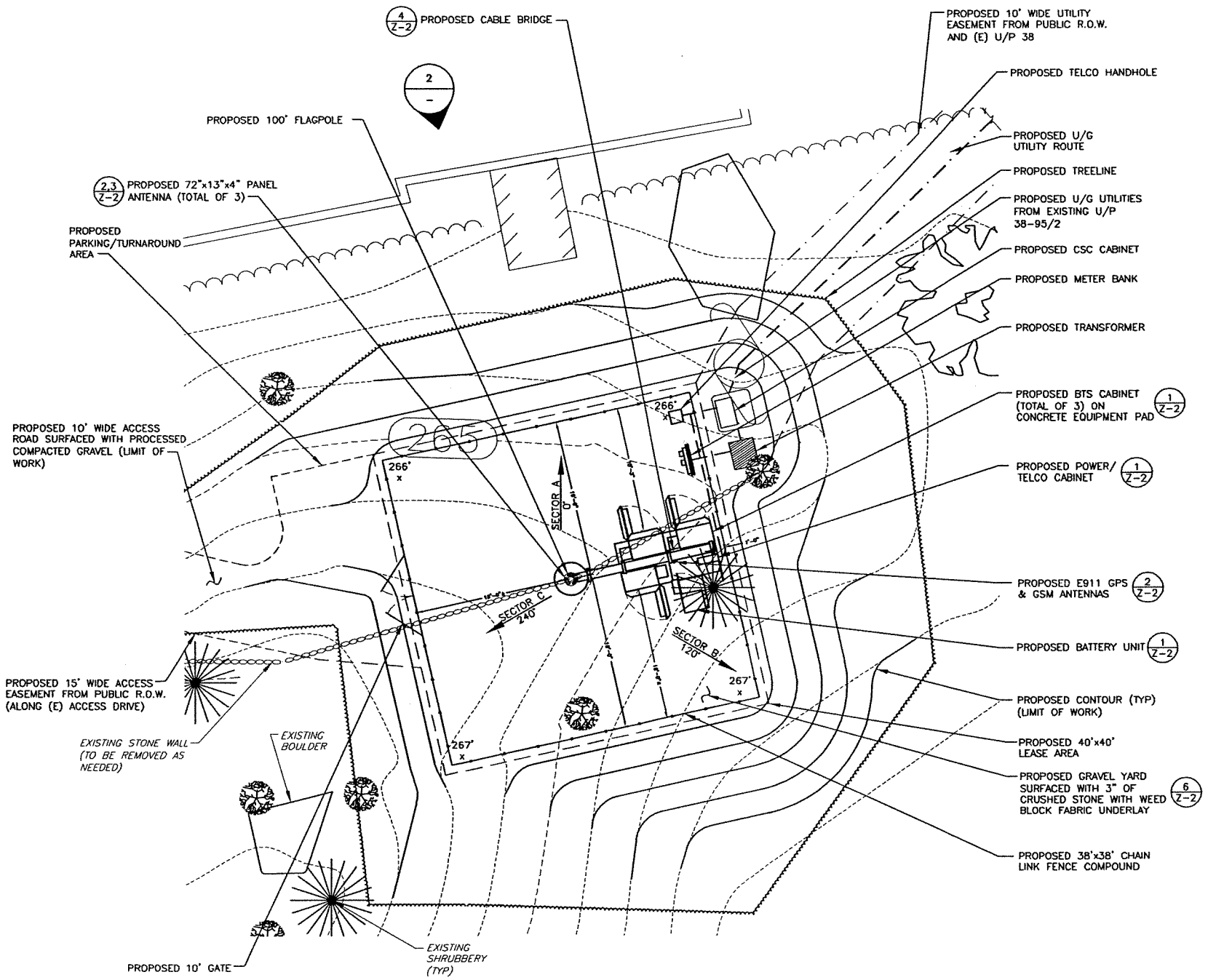

COMPOUND PLAN 1/-
SCALE: ¼"=1'-0"

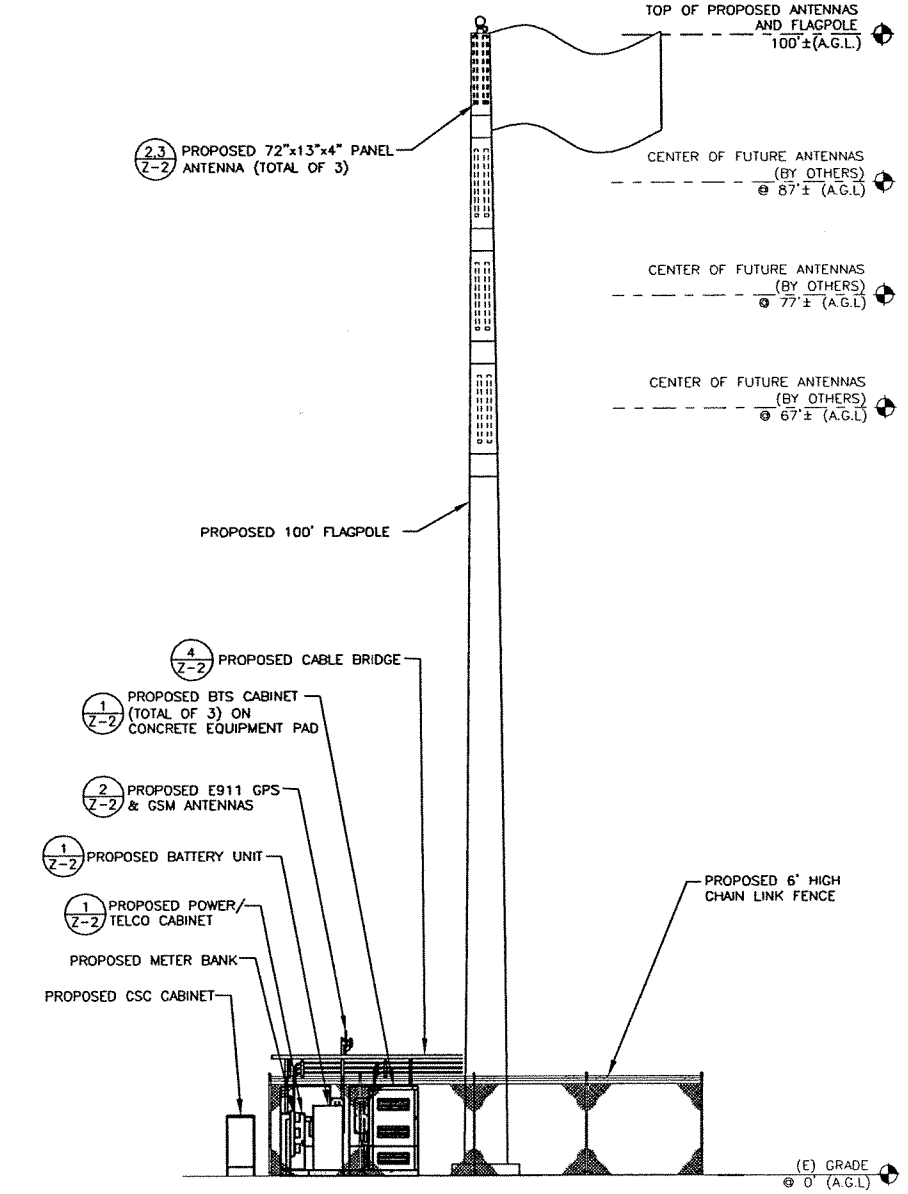

NORTHEAST ELEVATION 2/-
SCALE: ⅛"=1'-0"

ANTENNA ORIENTATION KEY

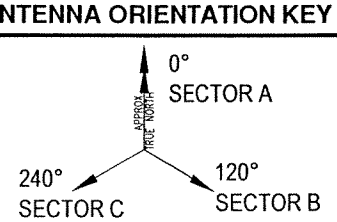

OMNIPOINT COMMUNICATIONS, INC.
A WHOLLY OWNED SUBSIDIARY OF T-MOBILE USA, INC.

15 COMMERCE WAY, SUITE B
NORTON, MA 02766

OFFICE: (508) 286-2700
FAX: (508) 286-2893

AERIAL SPECTRUM INCORPORATED
1 General Way
Reading, MA 01867
tel. (781) 942 0024
fax (781) 942 0551
e-mail mitch@aerialspectrum.com

APPROVALS

LANDLORD _____
LEASING _____
R.F. _____
ZONING _____
CONSTRUCTION _____
A/E _____

PROJECT NO:	4BN-0327-A
DRAWN BY:	JWM/MAP
CHECKED BY:	PLM

SUBMITTALS

2	06/23/06	ZONING REVISED
1	06/16/06	ZONING FINAL
0	06/07/06	ZONING

THIS DOCUMENT IS THE CREATION, DESIGN, PROPERTY AND COPYRIGHTED WORK OF OMNIPOINT COMMUNICATIONS, INC.. ANY DUPLICATION OR USE WITHOUT EXPRESS WRITTEN CONSENT IS STRICTLY PROHIBITED. DUPLICATION AND USE BY GOVERNMENT AGENCIES FOR THE PURPOSES OF CONDUCTING THEIR LAWFULLY AUTHORIZED REGULATORY AND ADMINISTRATIVE FUNCTIONS IS SPECIFICALLY ALLOWED.

4BN-0327-A
CHURCH OF THE GOOD SHEPHERD
164 NEWTOWN ROAD
ACTON, MA 01720

SHEET TITLE
COMPOUND PLAN AND ELEVATION

SHEET NUMBER
Z-1

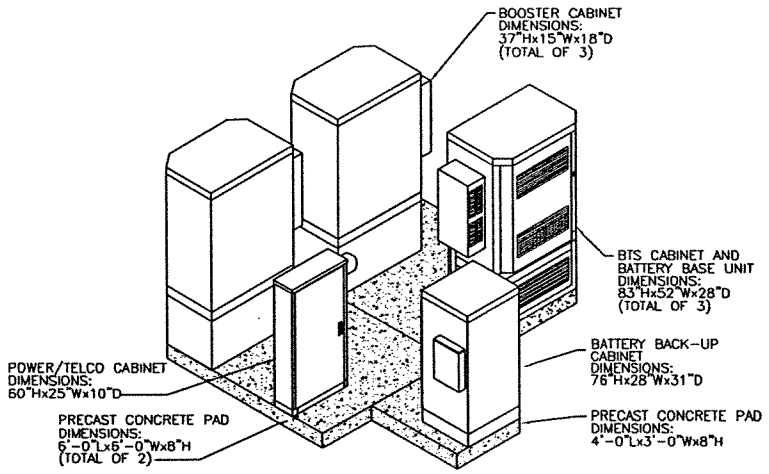

EQUIPMENT DETAIL 1/–

SCALE: N.T.S.

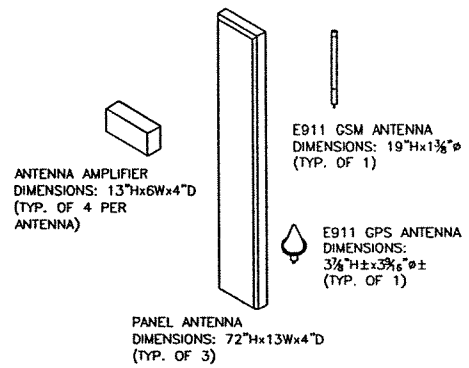

AMPLIFIER, GPS, GSM AND PANEL ANTENNA DETAIL 2/–

SCALE: N.T.S.

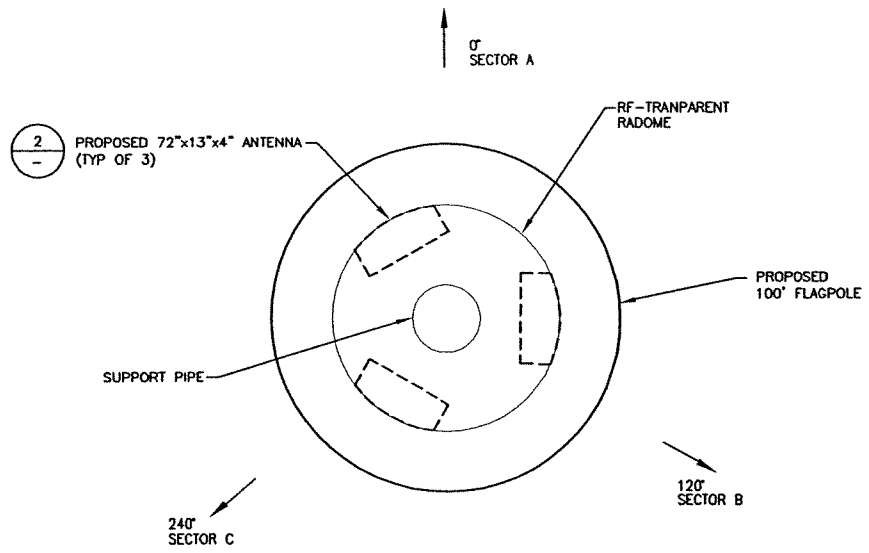

ANTENNA MOUNTING PLAN 3/–

SCALE: N.T.S.

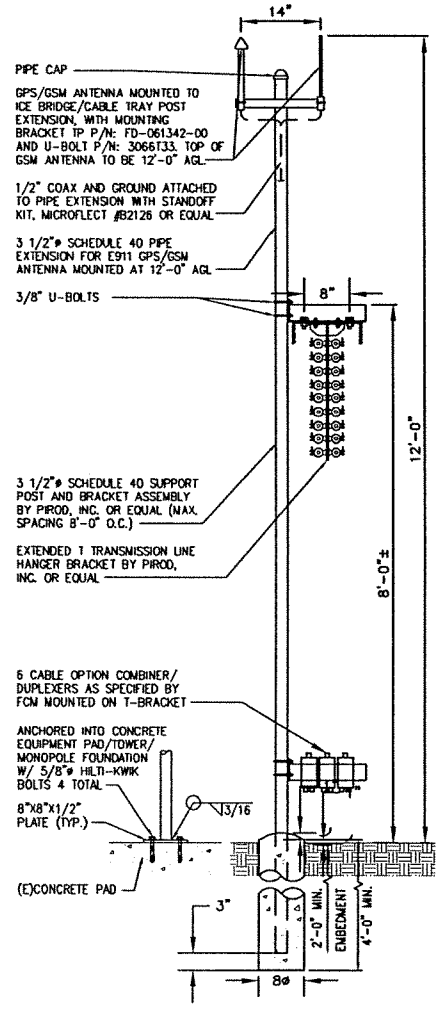

SECTION AT CABLE BRIDGE 4/–

SCALE: 3/4"=1'-0"

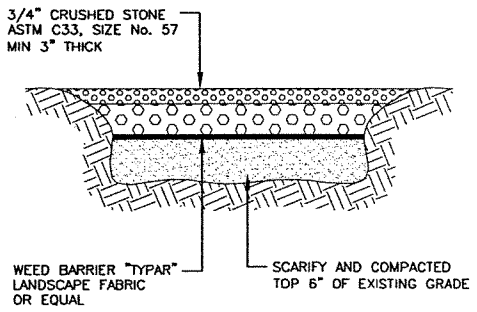

GRAVEL YARD DETAIL 5/–

SCALE: N.T.S.

OMNIPOINT COMMUNICATIONS, INC.
A WHOLLY OWNED SUBSIDIARY OF
T-MOBILE USA, INC.

15 COMMERCE WAY, SUITE B
NORTON, MA 02766

OFFICE: (508) 286-2700
FAX: (508) 286-2893

AERIAL SPECTRUM

1 General Way
Reading, MA 01867
tel. (781) 942 0024
fax (781) 942 0551
e-mail mitch@
aerialspectrum.com

APPROVALS

LANDLORD _____

LEASING _____

R.F. _____

ZONING _____

CONSTRUCTION _____

A/E _____

PROJECT NO: 4BN-0327-A

DRAWN BY: JWM/MAP

CHECKED BY: PLM

SUBMITTALS

2	06/23/06	ZONING REVISED
1	06/16/06	ZONING FINAL
0	06/07/06	ZONING

THIS DOCUMENT IS THE CREATION, DESIGN, PROPERTY AND COPYRIGHTED WORK OF OMNIPOINT COMMUNICATIONS, INC. ANY DUPLICATION OR USE WITHOUT EXPRESS WRITTEN CONSENT IS STRICTLY PROHIBITED. DUPLICATION AND USE BY GOVERNMENT AGENCIES FOR THE PURPOSES OF CONDUCTING THEIR LAWFULLY AUTHORIZED REGULATORY AND ADMINISTRATIVE FUNCTIONS IS SPECIFICALLY ALLOWED.

4BN-0327-A

CHURCH OF THE GOOD SHEPHERD

164 NEWTOWN ROAD
ACTON, MA 01720

SHEET TITLE

DETAILS

SHEET NUMBER

Z-2