Application # 0626

TOWN OF ACTON
HISTORIC DISTRICT COMMISSION
472 Main Street, Acton, MA 01720

RECEIVED
AUG 11 2006
TOWN OF ACTON
PLANNING DEPARTMENT

APPLICATION FOR CERTIFICATE

Applicant GLENN BERGER
BLUE BIRD REALTY TRUST
MAIN STREET ACTON CORP.

Telephone 978-835-9866

E-mail glenn.berger@verizon.net

Address 2 SCHOOL ST, ACTON

Property owner and address
(if different from applicant)

Location of Work
2 No. School Street
127, 129, 131 MAIN ST.

District: Center ___ West ___ South

Pursuant to Ch. 40C of the General Laws of Massachusetts, application is hereby made for issuance of a Certificate for work within a Local Historic District.

Description of Proposed work: (See instructions for additional information required)

AS PROPOSED ON SITE PLANS PROGRESS PRINT DATED 6/22
AND DRAWINGS TO FOLLOW FOR REMOVAL OF 127 MAIN ST.
ALTERATION AND RENOVATION OF 129, 131 - MAIN ST,
RESTORATION OF EXCHANGE HALL, 2 SCHOOL ST.
PROPOSED PUBLIC HEAR DATE 8/21/06. TIME TBD.

The undersigned hereby certifies that the information on this application and that any plans submitted herewith are correct, and constitute a complete description of the work proposed.

Signature of applicant _____ Date

Application received by _____ for HDC. Date 8/9/06

Certificate approved by _____ Date
for Historic District Commission

#0626

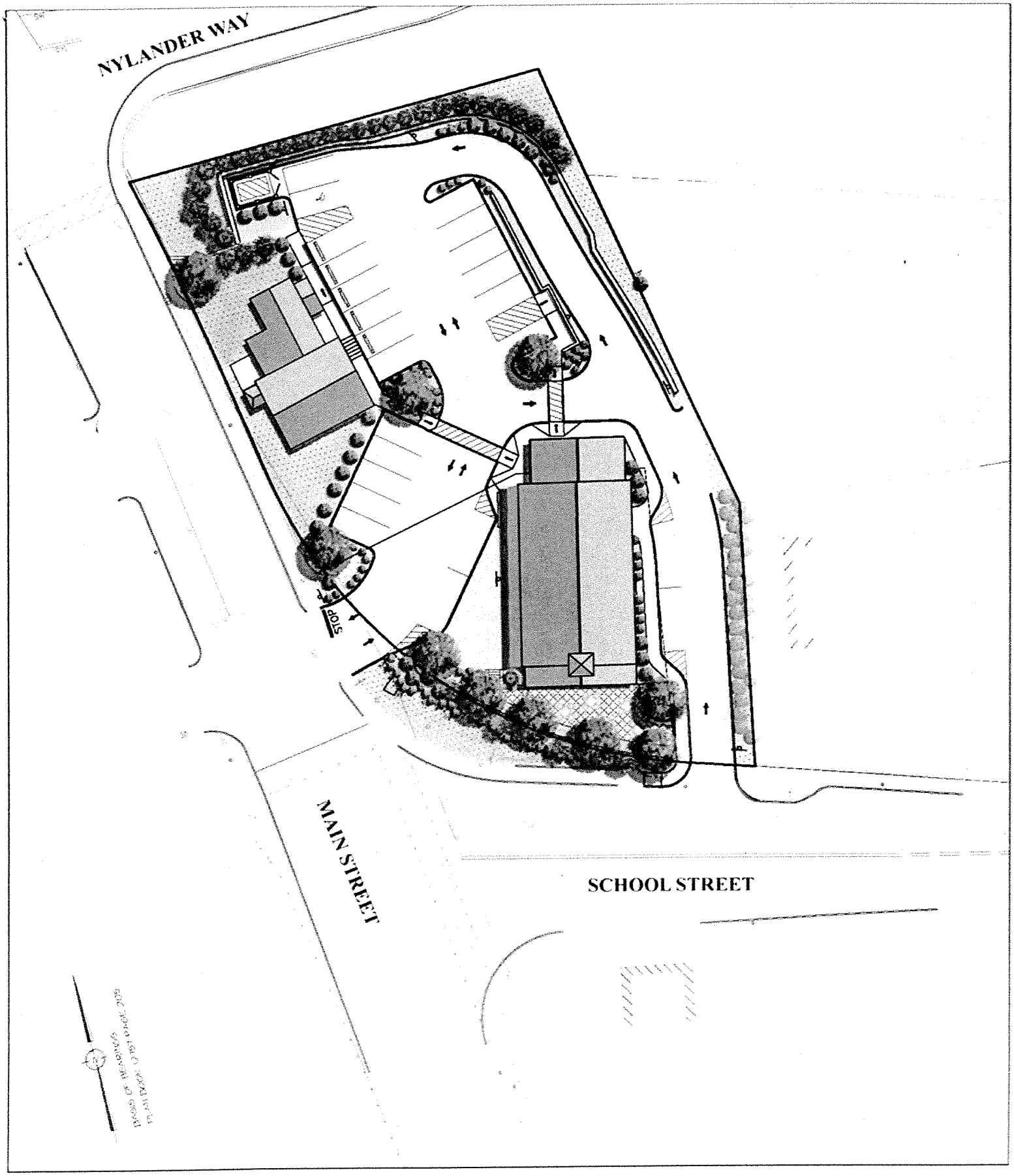

ILLUSTRATIVE EXHIBIT - PROPOSED LANDSCAPING AND SITE DESIGN

EXCHANGE HALL

ACTON, MASSACHUSETTS

7/5/06

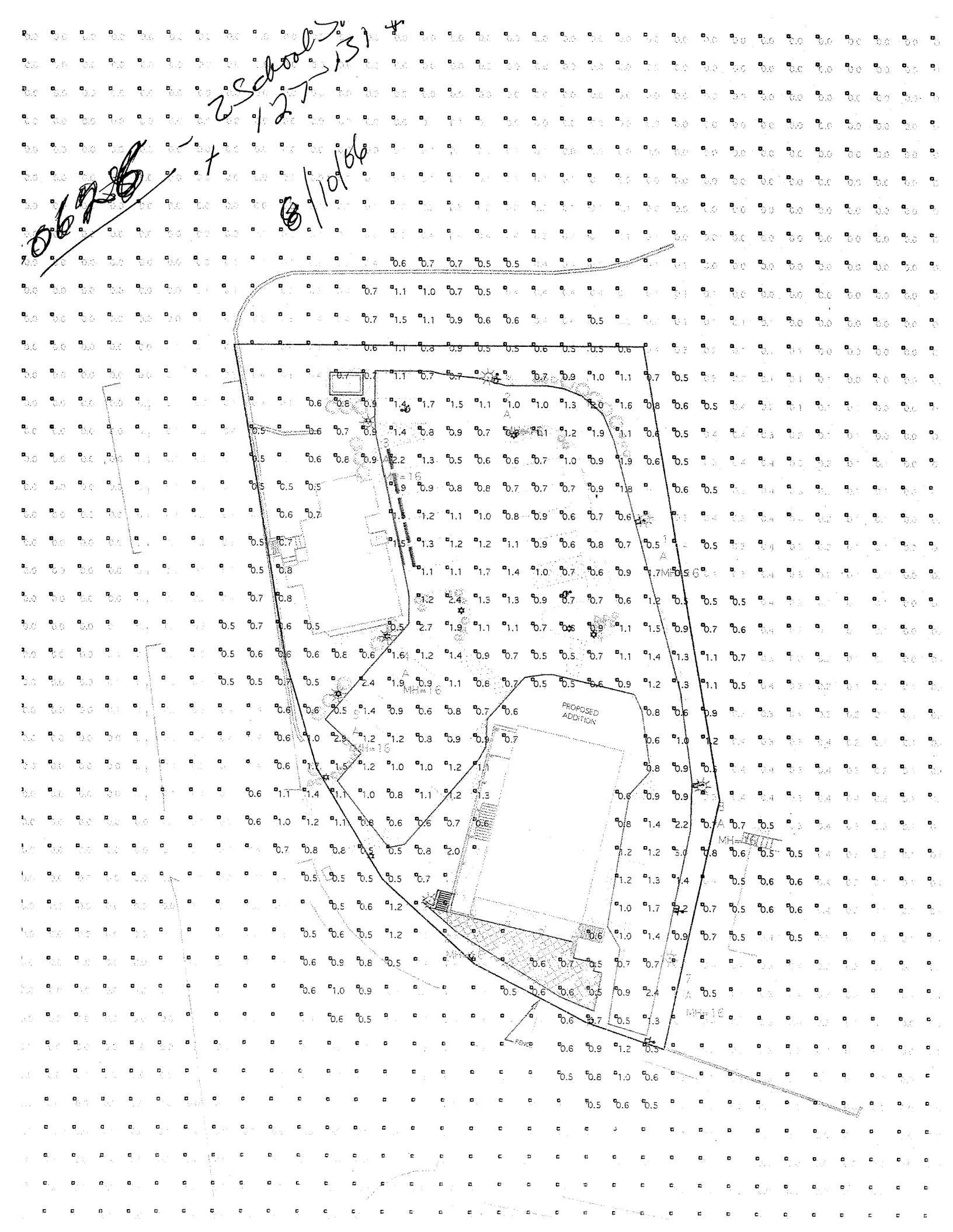

PROPOSED ADDITION
FENCE
MH=16

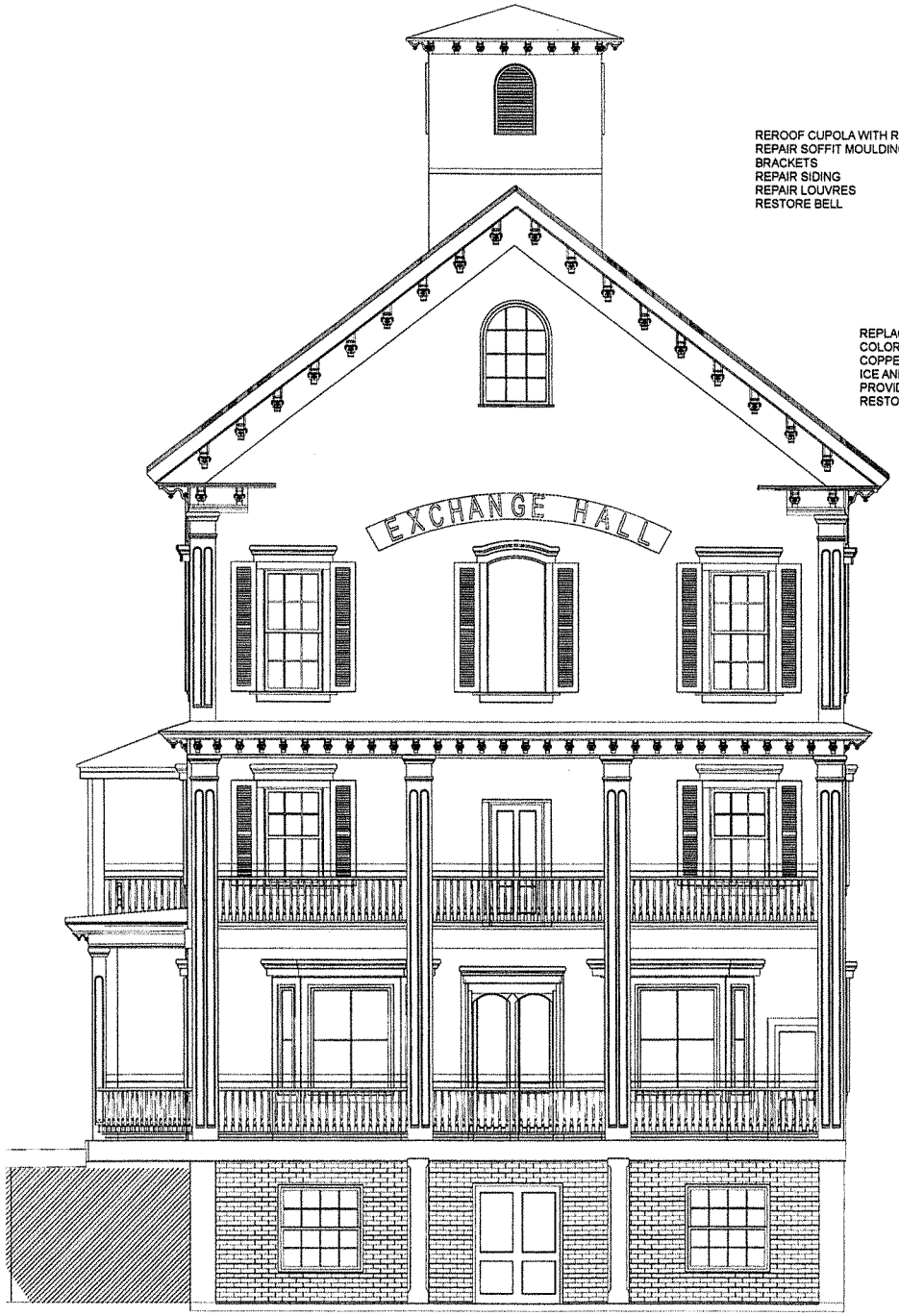

REROOF CUPOLA WITH RUBBER
REPAIR SOFFIT MOULDINGS AND BRACKETS
REPAIR SIDING
REPAIR LOUVRES
RESTORE BELL

REPLACE LOST SLATES WITH MATCHING COLOR
COPPER FLASHING
ICE AND WATERSHEILD AT SOFFITS
PROVIDE SNOW GUARD
RESTORE BRACKETS

RESTORE SIDING WHERE POSSIBLE
REPLACE WHERE NECESSARY
RESTORE WINDOW HEAD MOULDING AND FLASHING
REPAIR FRONT (SOUTH FACING) DOORS
REPAIR COLUMNS WITH ORIGINAL DETAIL TO REMAIN
POWERWASH, SCRAPE AND PAINT WITH MATCHING COLOR
BRICK TO BE PAINTED RED
REGLAZE EXISTING WINDOW SASH, SEE DETAIL (06-1) FOR INSTALLATION
ADD NEW "EXCHANGE HALL" SIGN
RESTORE AND INSTALL SHUTTERS ON THE FRONT AND WEST SIDE
RESTORE AND REPLACE AS NECESSARY BALUSTERS AND RAIL TO MATCH ORIGINAL
ADD CABLE (MATERIAL TBD) ABOVE AND BELOW DECK RAILING TO MEET MA CODE
SIGNAGE TO BE DETERMINED

#0626
8/10/06

1 **South Elevation** 3/16" = 1'-0"

Acton Woodworks, Inc.
Residential Space Planning
Design and Build

Acton Woodworks

2 School Street
Acton, MA 01720
978-263-0222
978-263-1873
info@actonwoodworks.com

Revision #5 8-4-06

Project #: 060215
CAD file:
Designer: Glenn Berger
Date: June 6, 2006
Copyright: 2006
Builder: Acton Woodworks

Title

Bluebird Realty Trust
2 School Street
Acton MA, 01720

Exchange Hall Restoration

South Elevation

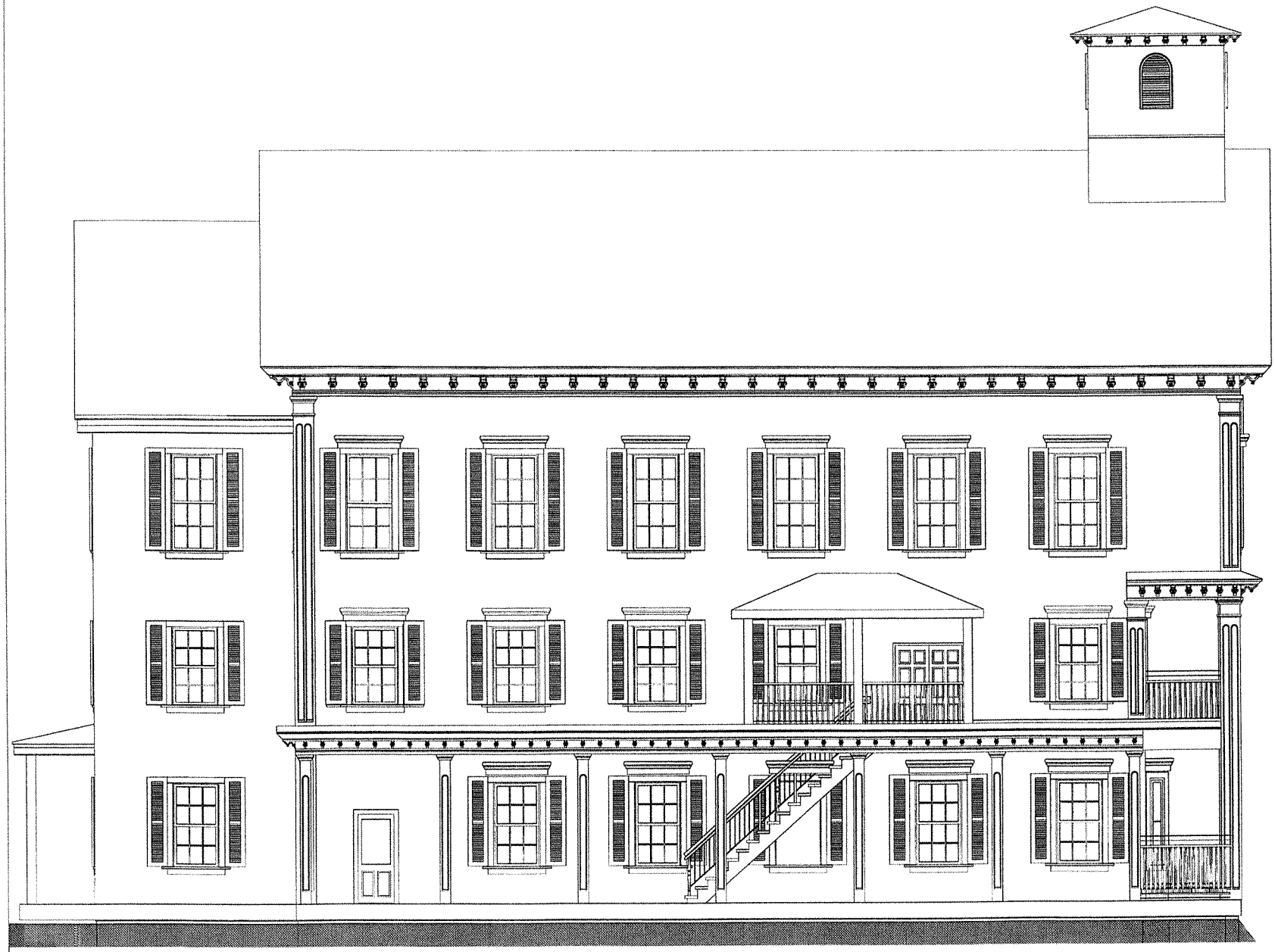

2 **West Elevation** 3/16" = 1'-0"

Acton Woodworks, Inc.
Residential Space Planning
Design and Build

Acton Woodworks

2 School Street
Acton, MA 01720
978-263-0222
978-263-1873
info@actonwoodworks.com

Revision #5 8-4-06

Project #: 060215
CAD file:
Designer: Glenn Berger
Date: June 6, 2006
Copyright: 2006
Builder: Acton Woodworks

Title

Bluebird Realty Trust
2 School Street
Acton MA, 01720

Exchange Hall Restoration

West Side Elevation

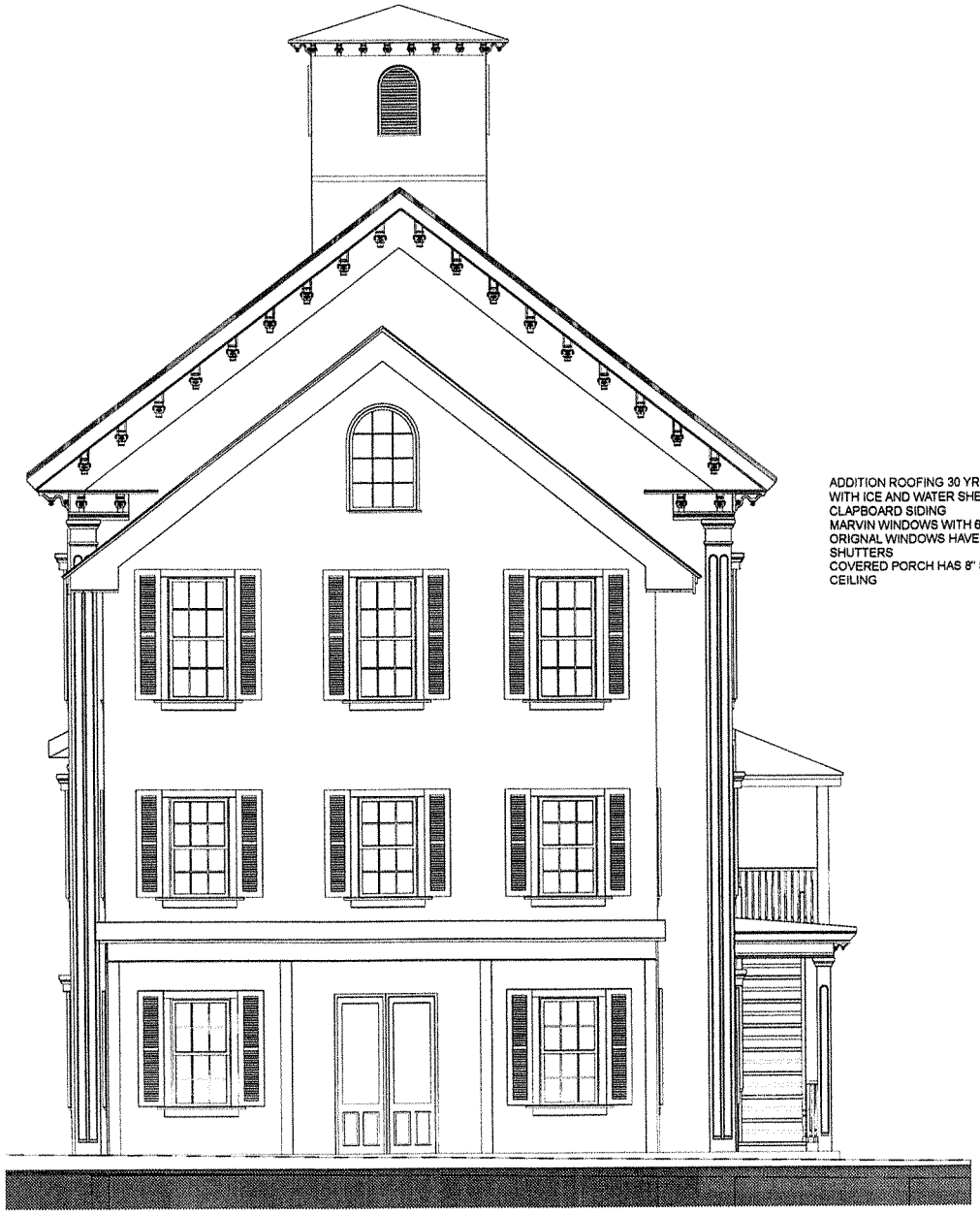

ADDITION ROOFING 30 YR ARCHITECTURAL SHINGLES
WITH ICE AND WATER SHEILD 3FT AT PERIMENTER
CLAPBOARD SIDING
MARVIN WINDOWS WITH 6/6 MUNTINS DETAIL (5/8" MUNTIN-
ORIGNAL WINDOWS HAVE 9/16" MUNTIN) ADD COMPATABLE
SHUTTERS
COVERED PORCH HAS 8" SQUARE COLUMNS & PINE
CEILING

1 **North Elevation** 3/16" = 1'-0"

Acton Woodworks, Inc.
Residential Space Planning
Design and Build

Acton Woodworks

2 School Street
Acton, MA 01720
978-263-0222
978-263-1873
info@actonwoodworks.com

Revision #5 8-4-06

Project #: 060215
CAD file:
Designer: Glenn Berger
Date: June 6, 2006
Copyright: 2006
Builder: Acton Woodworks

Title

Bluebird Realty Trust
2 School Street
Acton MA, 01720

Exchange Hall Restoration

North Elevation

1 **East Elevation** 3/16" = 1'-0"

Acton Woodworks, Inc.
Residential Space Planning
Design and Build

Acton Woodworks

2 School Street
Acton, MA 01720
978-263-0222
978-263-1873
info@actonwoodworks.com

Revision #5 8-4-06

Project #: 060215
CAD file:
Designer: Glenn Berger
Date: June 6, 2006
Copyright: 2006
Builder: Acton Woodworks

Title

Bluebird Realty Trust
2 School Street
Acton MA, 01720

Exchange Hall Restoration

East Side Elevation

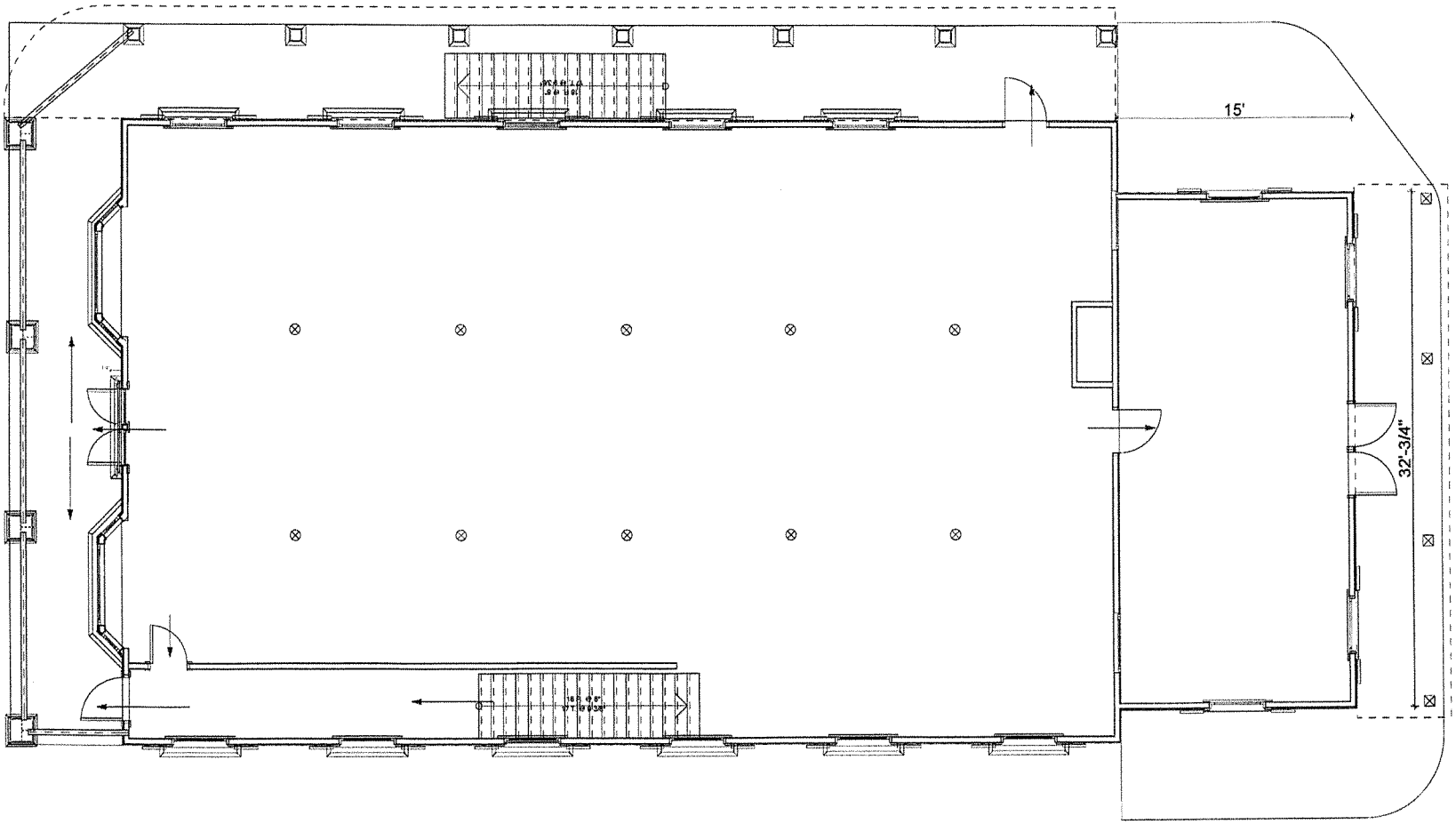

1 **Main Floor** **3/16" = 1'-0"**

Acton Woodworks, Inc.
Residential Space Planning
Design and Build

Acton Woodworks

2 School Street
Acton, MA 01720
978-263-0222
978-263-1873
info@actonwoodworks.com

Revision #5 8-4-06

Project #: 060215
CAD file:
Designer: Glenn Berger
Date: June 6, 2006
Copyright: 2006
Builder: Acton Woodworks

Title

Bluebird Realty Trust
2 School Street
Acton MA, 01720

Exchange Hall Restoration

Main Floor w/Addition

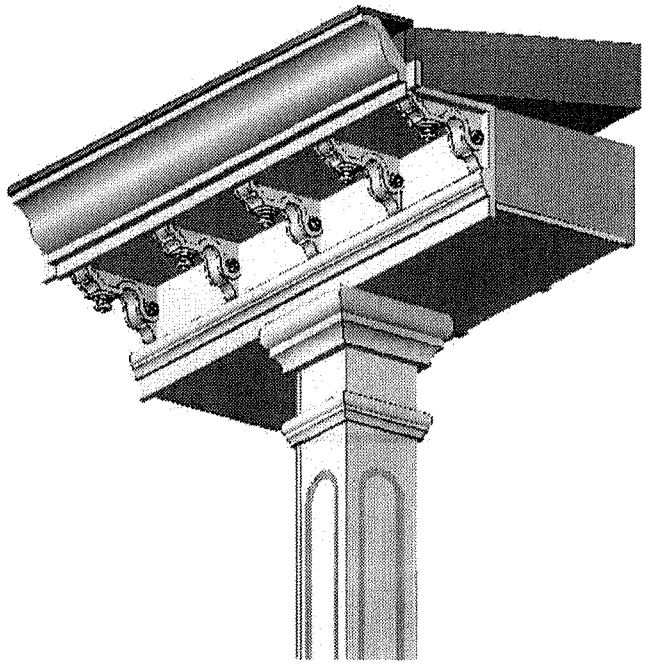

2 **Existing Soffit Perspective** 1/4" = 1'-0"

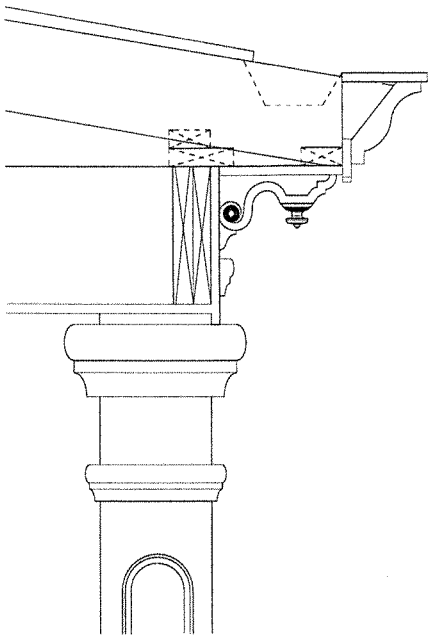

3 **Soffit Existing Detail** 1/2"= 1'-0"

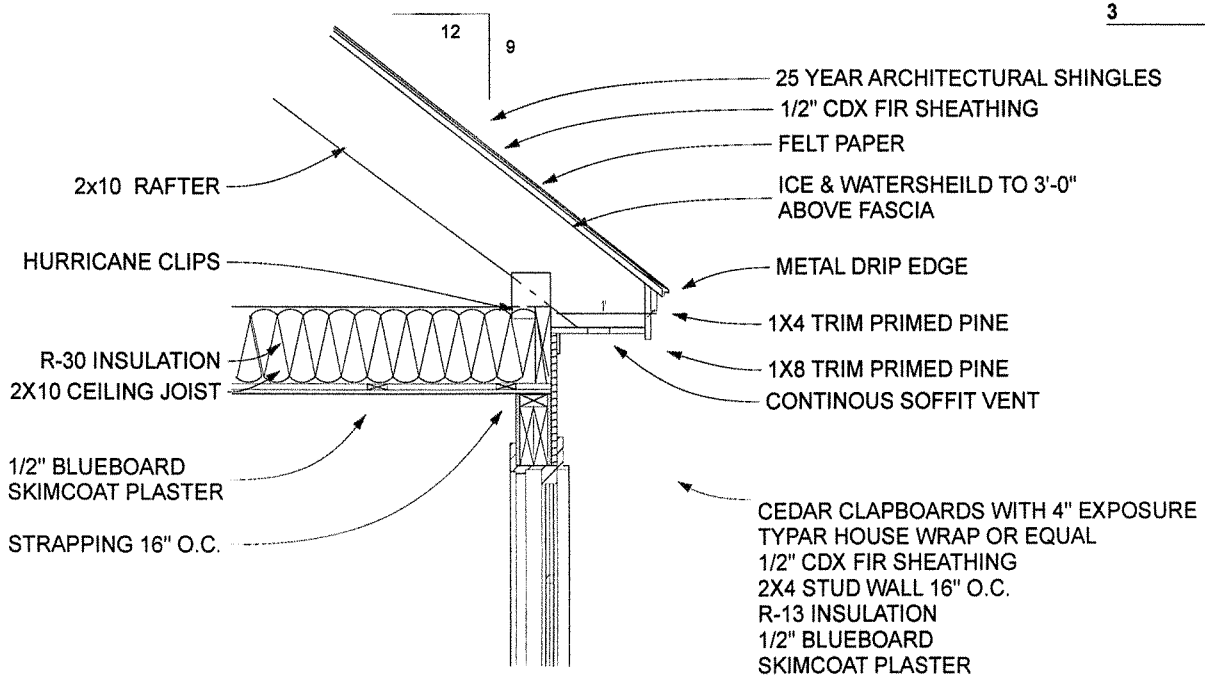

1 **Soffit Addition Detail** 1/2" = 1'-0"

Acton Woodworks, Inc.
Residential Space Planning
Design and Build

Acton Woodworks

2 School Street
Acton, MA 01720
978-263-0222
978-263-1873
info@actonwoodworks.com

Revision #5 8-4-06

Project #: 060215
CAD file:
Designer: Glenn Berger
Date: June 6, 2006
Copyright: 2006
Builder: , Acton Woodworks

Title

Bluebird Realty Trust
2 School Street
Acton MA, 01720

Exchange Hall Restoration

Soffit

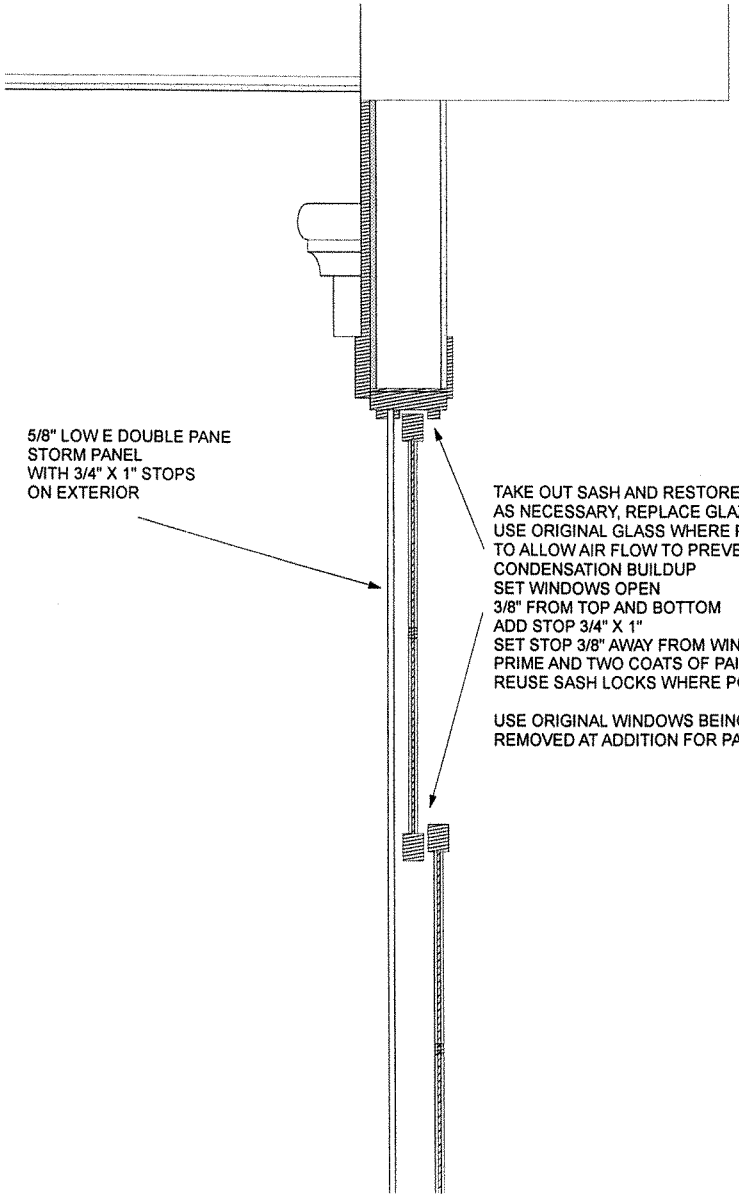

GENERAL NOTES:
WHEN PROCEDURE FOR RESTORATION IS NEEDED REFER TO THE DOCUMENTS FROM THE NATIONAL REGISTER OF HISTORIC PLACES.
WHENEVER POSSIBLE USE ORIGINAL AND RESTORE

RESTORE ALL EXTERIOR MOULDING WITH PRIMED PINE TO MATCH ORIGINAL

RESTORE ORIGINAL SOFFIT DETAIL WITH BRACKETS FABRICATE NEW BRACKETS TO MATCH AS NEEDED

RESTORE EXTERIOR BALUSTER AND RAILING TO MATCH ORIGINAL

REPLACE BROKEN SLATE WITH MATCHING SLATE AS NEEDED
CUPOLA AND SIDE PORCH TO BE RUBBER ROOFED

ADDITION TO HAVE ARCHITECTURE SHINGLE IN COMPATABLE COLOR TO ORIGINAL

REPLACE SIDING ONLY WHERE NEEDED, SCRAPE SIDING, PRIME AND 2 COATS OF PAINT MATCHING EXISTING COLORS

EXISTING FRONT BRICK TO BE PAINTED RED

REPAIR SHUTTERS AND MAKE NEW ONES AS NEEDED TO MATCH THE ORIGINAL

RESTORE WEATHERVANE AND REINSTALL

DECKING TO BE 1X4 MAHOGANY STAINED ON PT FRAME

RESTORE THE BELL IN THE CUPOLA TO WORK ORDER

FABRICATE AND INSTALL NEW "EXCHANGE HALL" LETTERING

1 **Window Section Detail** 1 1/2"= 1'-0"

Acton Woodworks, Inc.
Residential Space Planning
Design and Build

Acton Woodworks

2 School Street
Acton, MA 01720
978-263-0222
978-263-1873
info@actonwoodworks.com

Revision #5 8-4-06

Project #: 060215
CAD file:
Designer: Glenn Berger
Date: June 6, 2006
Copyright: 2006
Builder: Acton Woodworks

Title

Bluebird Realty Trust
2 School Street
Acton MA, 01720

Exchange Hall Restoration

Window Section Detail

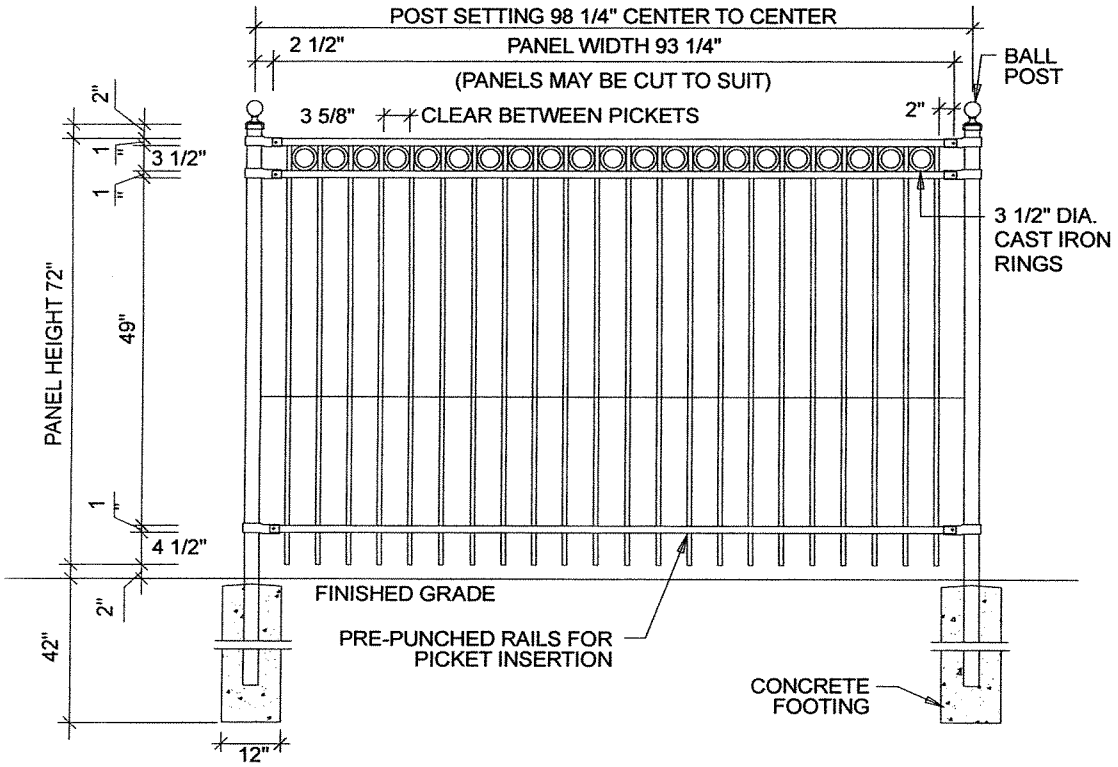

SPECIFICATIONS

POSTS, RAILS : & PICKETS	COLD FORMED STEEL TUBING INTERIOR & EXTERIOR GALVALUME COATING CHROMATE CONVERSION COATING ELECTROSTATICALLY APPLIED THERMALLY BONDED POLYESTER POWDER COATING MINIMUM FILM THICKNESS 2.5 MILS
POSTS:	2"x2", 16 GAUGE OR 14 GAUGE STANDARD POST SPACING (CENTER TO CENTER): 98 1/4"
POST FLANGES:	3"x6" x 1/4"
RAILS:	1" x 1", 14 GAUGE
PICKETS:	5/8"x5/8", 18 GAUGE
FITTINGS:	14 GAUGE STAMP FORGED FACTORY FINISH AS ABOVE
WELDS:	STAINLESS STEEL
STANDARD PANEL WIDTH:	93 1/4"

ORNAMENTAL FENCE

N.T.S.

02800-19

WDA, INC.

DESCRIPTION

The Generation Series Avenue Cutoff provides an updated styling and smooth exterior appearance. Making it the perfect choice to add a contemporary feel to any setting. The CVL optical systems achieve an IES cutoff classification while providing excellent performance and uniformity.

Catalog #		Type	
Project			
Comments		Date	
Prepared by			

SPECIFICATION FEATURES

A···Tops and Finials
All hard mount tops are made of spun aluminum. Top provided with toolless access for ease of maintenance. Finials are manufactured of cast aluminum.

B···Reflector
Highly specular multi-faceted CVL reflector system provides a Type III or V Cutoff Distribution. Vertical lamp position maximizes light output, ensures a uniform distribution and minimizes direct glare.

C···Globe
Clear injection molded 9" globe is offered in UV resistant acrylic.

D···Decorative Chimney
Chimney provided with brushed aluminum finish standard. Optional copper finished accents available for chimney and access top.

E···Cage Assemblies
Two (2) uprights are manufactured of cast aluminum. Banding is spun aluminum. All cage assemblies are mounted to the exterior of the housing via four (4) stainless steel fasteners. A variety of finishes are available.

F···Electrical
Available up to 400W MH and 250W HPS. Ballast assembly is mounted on a removable tray with quick disconnects for ease of installation and maintenance. Plug in starter standard when applicable. Terminal block is hard mounted to the casting and easily accessible through the door's wide entryway. UL listing and optional induction fluorescent lamp available.

G···Housing
Heavy duty-cast aluminum housing and door. Wide handhole provide toolless entry for access to plug-in starters and optional NEMA twistlock PCR. 1" ANSI wattage/source label. Fixture is 3G vibration rated.

H···Mounting
Heavy duty-cast aluminum housing and door. Wide handhole provide toolless entry for access to plug-in starters and optional NEMA twistlock PCR. 1" ANSI wattage/source label. Fixture is 3G vibration rated.

I···Finish
Standard polyester powder coat finish in black. For more color options see optional color or consult your Streetworks represenatitive for more information.

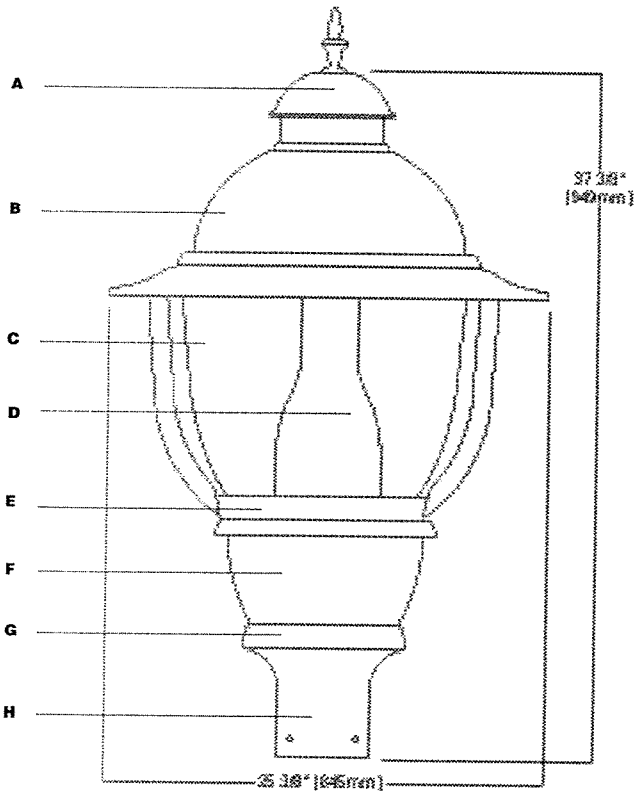

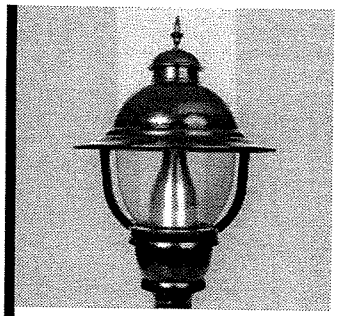

ARC-C
CUTOFF GENERATION SERIES AVENUE POST TOP

50-400W
High Pressure Sodium
Metal Halide
Induction

DECORATIVE LUMINAIRE

GENERATION CVL SERIES

DARK SKY COMPLIANT CO Cutoff

EPA
Effective Projected Area:
2.1 Square Feet

Approximate Net Wt: 50 lbs.

PHOTOMETRICS (Complete IES files available at www.cooperlighting.com)

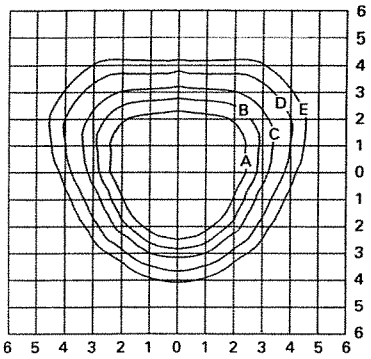

ARC17M3C.IES
175-Watt MH
14,000-Lumen Clear ED-28 Lamp
Type III Cutoff

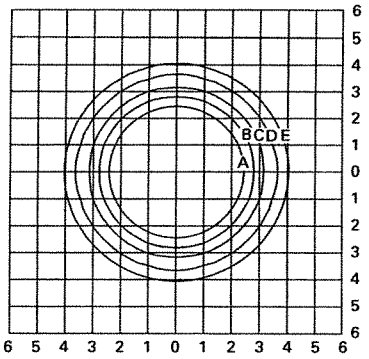

ARC17M5C.IES
175-Watt MH
14,000-Lumen Clear ED-28 Lamp
Type V Cutoff

Footcandle Table

Select mounting height and read across for footcandle values of each isofootcandle line. Distance in units of mounting height.

Mounting Height	Footcandle Values for Isofootcandle Lines				
ARC17M3C.IES	**A**	**B**	**C**	**D**	**E**
10'	**2.00**	**1.00**	**0.50**	**0.20**	**0.10**
15'	0.88	0.44	0.22	0.09	0.04
20'	0.50	0.25	0.3	0.05	0.03
ARC17M5C.IES					
10'	**2.00**	**1.00**	**0.50**	**0.20**	**0.10**
15'	0.88	0.44	0.22	0.09	0.04
20'	0.50	0.25	0.3	0.05	0.03

ORDERING INFORMATION

SAMPLE NUMBER: ARC25MWW5C652

ARC									
Product Family ARC=Architectural	**Lamp Wattage** [3] **50**=50W **70**=70W **85**=85W [1] **10**=100W **15**=150W **17**=175W **25**=250W **40**=400W [2]	**Lamp Type** [3] **M**=Metal Halide [4] **S**=High Pressure Sodium **Q**=Induction [1]	**Ballast Type** [3] **R**=Reac./NPF [5] **H**=Reac./HPF **N**=Hi. Reac./NPF **P**=Hi. Reac./HPF **W**=CWA **K**=10KV CWA [6] **I**=Induction	**Voltage** [3] **2**=120V **0**=208V **4**=240V **7**=277V **8**=480V **9**=347V **W**=Multi-Tap Wired 120V **N**=Multi-Tap Wired 277V	**Refractor Type** **3C**=Cutoff III **5C**=Cutoff V	**Cage Type** [7,8] **6**=Avenue **X**=None	**Top Type** [7] **5**=Avenue (Top Access)	**Finial Type** **2**=Modern **3**=Architectural	**Options** (add as suffix) [9] **1**=Single Fuse (120 or 277V) **2**=Double Fuse (208, 240 or 480V) **Y**=Black Chimney **4**=Internal NEMA Photocontrol Receptacle **WH**=White **BZ**=Bronze **AP**=Grey **DP**=Dark Platinum **H**=Hartford Green **U**=UL/CSA Listed **C**=Copper Accents [10]

NOTE: 1 85W QL Induction only. 120 or 240V only. 2 Metal Halide only. Not available in 480V. 3 Refer to technical section for lamp/ballast/voltage compatibility. 4 Medium-base lamp standard for 150W and below Metal Halide. 400W Metal Halide requires reduced jacket ED28 lamp. 5 Available 120V only. 6 Available 50-150W, 120/240 or single voltage only. 7 Avenue cage must be used with Avenue top. Avenue top is available without cage. 8 Cage type 6 will be finished same color as base. 9 Must be ordered in alphanumeric order. 10 Chimney and Access Top finished in copper.

A1 South Elevation
SCALE: 1/4" = 1'-0"

#0626 8/10/06

Acton Woodworks, Inc.
Residential Space Planning
Design and Build

Acton Woodworks

2 School Street
Acton, MA 01720
978-263-0222
978-263-1873
info@actonwoodworks.com

Revision #3 8-4-06

Project #: 060705
CAD file:
Designer: Glenn Berger
Date: June 15, 2006
Copyright: 2006
Builder: Acton Woodworks

Title

Main Street Acton Corp
131 Main Street
Acton MA 01720

Renovation

South Elevation

NOT TO SCALE

A2 West Elevation
SCALE: 1/4" = 1'-0"

Acton Woodworks, Inc.
Residential Space Planning
Design and Build

Acton Woodworks

2 School Street
Acton, MA 01720
978-263-0222
978-263-1873
info@actonwoodworks.com

Revision #3 8-4-06

Project #: 060705
CAD file:
Designer: Glenn Berger
Date: June 15, 2006
Copyright: 2006
Builder: Acton Woodworks

Title

Main Street Acton Corp
131 Main Street
Acton MA 01720

Renovation

West Elevation

NOT TO SCALE

A3 North Elevation
SCALE: 1/4" = 1'-0"

Acton Woodworks, Inc.
Residential Space Planning
Design and Build

Acton Woodworks

2 School Street
Acton, MA 01720
978-263-0222
978-263-1873
info@actonwoodworks.com

Revision #3 8-4-06

Project #: 060705
CAD file:
Designer: Glenn Berger
Date: June 15, 2006
Copyright: 2006
Builder: Acton Woodworks

Title

Main Street Acton Corp
131 Main Street
Acton MA 01720

Renovation

North Elevation

NOT TO SCALE

A4 East Elevation
SCALE: 1/4" = 1'-0"

Acton Woodworks, Inc.
Residential Space Planning
Design and Build

Acton Woodworks

2 School Street
Acton, MA 01720
978-263-0222
978-263-1873
info@actonwoodworks.com

Revision #3 8-4-06

Project #: 060705
CAD file:
Designer: Glenn Berger
Date: June 15, 2006
Copyright: 2006
Builder: Acton Woodworks

Title

Main Street Acton Corp
131 Main Street
Acton MA 01720

Renovation

East Elevation

NOT TO SCALE

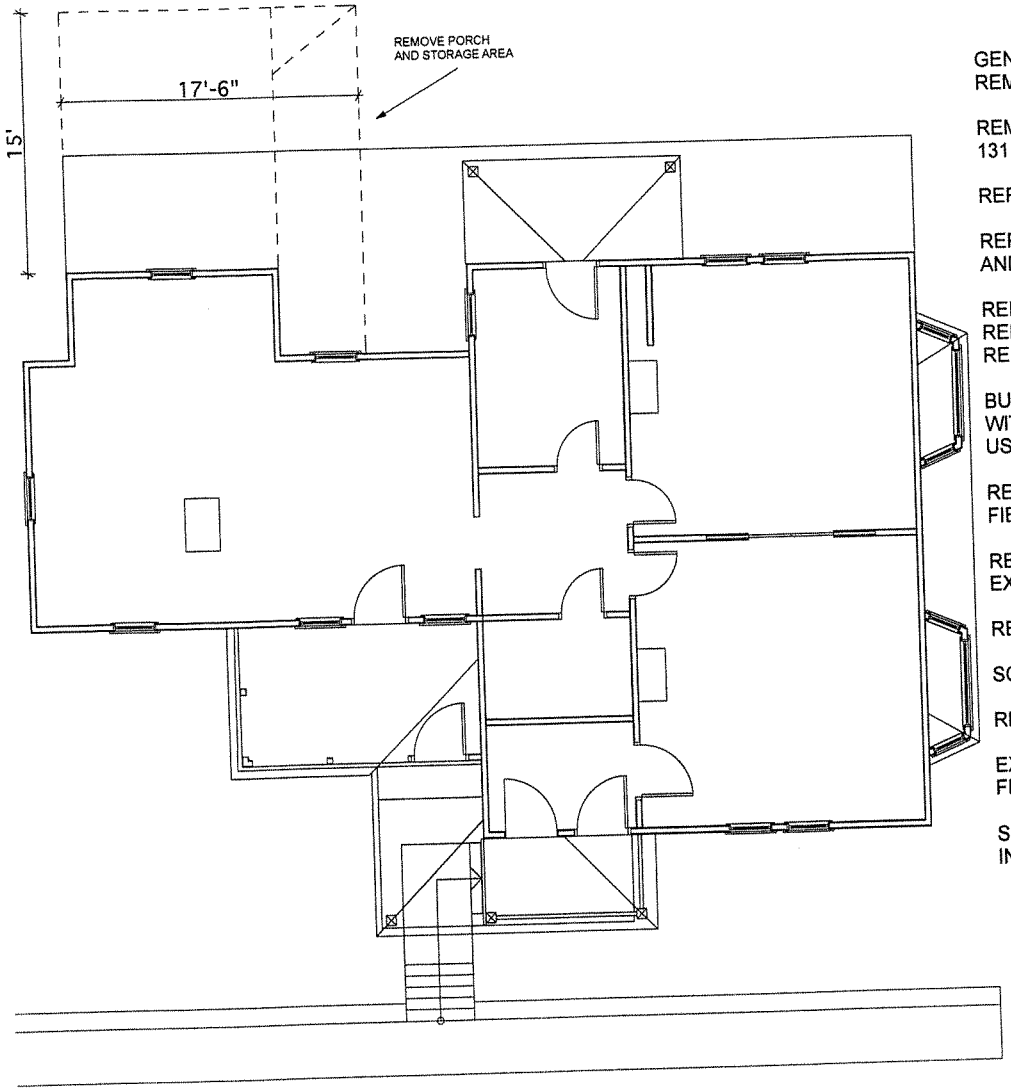

GENERAL NOTES:
REMOVE 127 MAIN STREET TO MAKE ROOM FOR PARKING

REMOVE PORCH AND FIRST FLOOR STORAGE AREA OF 131 MAIN STREET REQUIRED BY PARKING DESIGN

REPAIR SIDING WITH CEDAR CLAPBOARD

REPAIR EXISTING EXTERIOR SOFFIT, CORNER BOARDS, AND MOULDING TRIM DETAILS

REPAIR DECORATIVE FRETWORK AT THE BAYWINDOWS
REPLACE WINDOWS WITH MARVIN WOOD WINDOW
REPLACEMENT SASH KITS WITH 2/2- 5/8" SDS

BUILD NEW REPLACEMENT ENTRY WITH PORCH ROOF
WITH NEW FIBERGLASS DOOR BY THERMATRU
USE EXISTING TRIM DETAILS FOR NEW ENTRY

REPLACE THE WEST DOORS WITH NEW INSULATED FIBERGLASS UNITS BY THERMATRU

REBUILD SCREEN PORCH AND WEST ENTRY MATCH EXISTING DETAILS

REPAIR FOUNDATION AS NEEDED

SCRAPE AND PAINT WITH TWO COLORS TBD

REROOF 30 YEAR ARCHITECTURAL SHINGLES

EXTERIOR LIGHTING TO MATCH EXCHANGE HALL FIXTURES

SEE ENGINEERING BY WATERMAN ASSOC. FOR SITE INFORMATION

A5 First floor
SCALE: 3/16" = 1'-0"

Acton Woodworks, Inc.
Residential Space Planning
Design and Build

Acton Woodworks

2 School Street
Acton, MA 01720
978-263-0222
978-263-1873
info@actonwoodworks.com

Revision #3 8-4-06

Project #: 060705
CAD file:
Designer: Glenn Berger
Date: June 15, 2006
Copyright: 2006
Builder: Acton Woodworks

Title

Main Street Acton Corp
131 Main Street
Acton MA 01720

Renovation

First floor