# STORMWATER POLLUTION PREVENTION PLAN

## GENERAL:

1. THIS PLAN IS ALSO INTENDED TO PROVIDE GUIDANCE AND INSTRUCTION TO THE OWNER AND CONTRACTOR(S) IN THE PREVENTION OF EROSION AND SEDIMENTATION ON AND OFF–SITE. THIS PLAN IS INTENDED TO ALLOW ANY PERMIT CONDITIONS OR ORDERS OF CONDITIONS TO BE MORE SPECIFIC IN ADDRESSING ITEMS OF CONCERN. IF, UPON ISSUANCE OF A COMPREHENSIVE PERMIT FROM THE ACTON BOARD OF APPEALS OR AN ORDER OF CONDITIONS BY THE ACTON CONSERVATION COMMISSION, ANY ITEMS SPECIFIED HEREIN ARE IN CONFLICT WITH THE ORDERS OF CONDITIONS, SAID ORDERS OF CONDITIONS SHALL SUPERSEDE THE REQUIREMENTS SPECIFIED ON THIS PLAN.

2. THIS PLAN IS PART OF A SET OF DOCUMENTS THAT ARE TO BE MEWED AND REVIEWED IN THEIR ENTIRETY, SUCH DOCUMENTS INCLUDE THE CONSTRUCTION SPECIFICATIONS, CONSTRUCTION PLANS AND ANY PERMITS ISSUED BY THE TOWN OF ACTON, AGENTS OF THE TOWN OF ACTON OR OTHER REGULATORY AGENCIES.

## EROSION CONTROL MEASURES:

1. THE CONTRACTOR SHALL BE RESPONSIBLE FOR ENSURING THAT EROSION AND SEDIMENTATION ARE CONTROLLED. THIS PLAN SHALL BE SHALL BE ADAPTED TO FIT THE CONTRACTOR'S EQUIPMENT, WEATHER CONDITIONS, AND ANY PERMIT CONDITIONS/ORDERS OF CONDITIONS ISSUED BY THE ZONING BOARD OF APPEALS , CONSERVATION COMMISSION AND ANY SPECIAL CONDITIONS ISSUED BY ANY OTHER REGULATORY AGENCY OF THE TOWN OF ACTON.

2. THE MOST IMPORTANT ASPECTS OF CONTROLLING EROSION AND SEDIMENTATION ARE LIMITING THE EXTENT OF DISTURBANCE AND STABILIZING SURFACES AS SOON AS POSSIBLE. OF SECONDARY IMPORTANCE IN EROSION CONTROL IS THE LIMITING THE SIZE AND LENGTH OF THE TRIBUTARY DRAINAGE AREA WITHIN THE WORK SITE AND DRAINAGE STRUCTURES. THESE FUNDAMENTAL PRINCIPLES SHALL BE THE KEY FACTOR IN THE CONTRACTOR'S CONTROL OF EROSION ON THE SITE.

4. ALL DISTURBED SURFACES SHALL BE STABILIZED A MINIMUM OF 14 DAYS AFTER CONSTRUCTION IN ANY PORTION OF THE SITE HAS CEASED OR IS TEMPORARILY HALTED UNLESS ADDITIONAL CONSTRUCTION IS INTENDED TO BE INITIATED WITHIN 21 DAYS.

5. THE CONTRACTOR IS RESPONSIBLE FOR THE MAINTENANCE AND REPAIR OF ALL EROSION CONTROL DEVICES ON–SITE. ALL EROSION CONTROL DEVICES SHALL BE REGULARLY INSPECTED. ANY SEDIMENTS REMOVED FROM THE CONTROL DEVICES SHALL BE DISPOSED OF OFF SITE.

6. AT NO TIME SHALL SILT–LADEN WATER BE ALLOWED TO ENTER SENSITIVE AREAS (FORT POND BROOK, OFF–SITE AREAS AND DRAINAGE SYSTEMS). ANY RUNOFF FROM DISTURBED SURFACES SHALL BE DIRECTED THROUGH SETTLING BASINS AND EROSION CONTROL BARRIERS PRIOR TO ENTERING ANY SENSITIVE AREAS.

## PRELIMINARY SITE WORK:

1. MATERIAL REMOVED SHOULD BE STOCKPILED, SEPARATING THE TOPSOIL FOR FUTURE USE ON THE SITE. EROSION CONTROLS SHALL BE UTILIZED ALONG THE DOWNSLOPE SI–DE OF THE PILES IF THE PILES ARE TO REMAIN MORE THAN THREE WEEKS OR SUBJECT TO EROSIVE CONDITIONS SUCH AS INTENSE RAIN, WIND OR OTHER EXPOSURE.

2. STOCKPILES SHALL BE LOCATED AS SPECIFIED HEREIN AND AS REQUIRED. SHOULD ADDITIONAL AREAS BE NEEDED THEY SHALL BE LOCATED WITHIN THE LIMITS OF DISTURBANCE, IN AREAS OF MINIMAL IMPACT. IF A STOCKPILE IS LOCATED ON A SLOPE, THE RUNOFF SHALL BE DIRECTED AWAY FROM THE PILE.

3. IF INTENSE RAINFALL IS ANTIOPATED, THE INSTALLATION OF SUPPLEMENTAL HAYBALE DIKES, SILT FENCES, OR ARMORED DIKES SHALL BE UTILIZED.

4. IF THE SITE CONSTRUCTION OCCURS AT ANY TIME OTHER THAN THE MAY – NOVEMBER CONSTRUCTION SEASON, THE SITE DRAINAGE SYSTEM SHALL BE INSTALLED, MAINTAINING HYDRAULIC CAPACITY, PRIOR TO ANY ROUGH GRADING IN THE BUFFER ZONE.

## DRAINAGE SYSTEM:

1. THE DRAINAGE SYSTEM SHALL BE INSTALLED FROM THE DOWNSTREAM END UP.

2. A SILT FENCE SHALL BE INSTALLED AT THE OUTFALL OF ALL TEMPORARY BASINS AND SWALES. IT SHALL REMAIN IN PLACE UNTIL ALL TRIBUTARY AREAS ARE STABILIZED.

3. WATER SHALL NOT BE ALLOWED TO ENTER PIPES OR RECHARGE SYSTEMS FROM UN–STABILIZED SURFACES.

4. TRENCH EXCAVATIONS SHALL BE LIMITED TO THE MINIMUM LENGTH REQUIRED FOR DAILY PIPE INSTALLATION. ALL TRENCHES SHALL BE BACKFILLED AS SOON AS POSSIBLE. THE ENDS OF PIPES SHALL BE CLOSED NIGHTLY WITH PLYWOOD AND BACKER BOARD.

## INSTALLATION OF UTILITIES:

1. CARE SHALL BE TAKEN TO ASSURE THAT THE UTILITY TRENCHES DO NOT CHANNELIZE RUNOFF TOWARDS EXISTING STREETS OR OTHER OFF–SITE AREAS.

2. THE INSTALLATION OF SUBSURFACE UTILITIES AND APPURTENANCES SHALL BE IN ACCORDANCE WITH THE APPLICABLE UTILITY COMPANY SPECIFICATIONS.

3. TRENCH EXCAVATIONS SHALL BE LIMITED TO THE MINIMUM LENGTH REQUIRED FOR DAILY UTILITY INSTALLATION. ALL TRENCHES SHALL BE BACKFILLED AS SOON AS POSSIBLE.

## LANDSCAPING:

1. LANDSCAPING SHALL OCCUR AS SOON AS POSSIBLE TO PROVIDE PERMANENT STABILIZATION OF DISTURBED SURFACES.

2. CONTRACTOR SHALL UTILIZE A VARIETY OF SLOPE STABILIZATION METHODS AND MATERIALS WHICH SHALL BE ADJUSTED TO THE SITE CONDITIONS. EROSION CONTROL BLANKETS OR MIRAFI MIRAMAT (OR SIMILAR PRODUCTS) SHALL BE AVAILABLE ON SITE.

3. IF THE SEASON OR ADVERSE WEATHER CONDITIONS DO NOT ALLOW THE ESTABLISHMENT OF VEGETATION, TEMPORARY MULCHING WITH HAY, TACKIFIED WOOD CHIPS OR OTHER METHODS SHALL BE PROVIDED.

4. A MINIMUM OF 6" TOPSOIL SHALL BE PLACED AND ITS SURFACE SMOOTHED TO THE SPECIFIED GRADES.

5. SEED APPLICATIONS SHALL BE IN ACCORDANCE WITH THE GRASS AND SLOPE COVER SPECIFICATIONS.

6. TO ENSURE A DENSE, SUCCESSION GROWTH, SEED MIXTURE TYPE "C" IS REQUIRED ON ALL DISTURBED SURFACES, EXCEPT WHERE LAWN AREA IS PROPOSED, SEED MIXTURE TYPE "A" IS REQUIRED IN THESE AREAS.

## PRE–CONSTRUCTION:

1. AN EROSION CONTROL BARRIER (SEE BELOW) SHALL BE INSTALLED AS DEPICTED ON THE SITE PLAN, BETWEEN THE AREAS TO BE DISTURBED AND WETLAND AREAS. THIS BARRIER SHALL REMAIN IN PLACE UNTIL ALL TRIBUTARY SURFACES HAVE BEEN FULLY STABILIZED. THE EROSION CONTROL BARRIERS AS SHOWN ON THE SITE PLAN ARE THE MINIMUM REQUIRED TO PROTECT THE ON & OFF SITE DRAINAGE SYSTEMS.

2. PHOTOGRAPHS AND/OR VIDEO IMAGES OF THE PRE–CONSTRUCTION CONDITION OF THE SITE AND SURROUNDING AREAS, ESPECIALLY THE ADJACENT STREETS SHALL BE TAKEN, DEVELOPED AND DATED. A COPY OF THESE MATERIALS SHALL BE SUBMITTED TO THE COMMISSION AND OWNER FOR THEIR FILES. THESE PICTURES AND IMAGES SHALL REFERENCE EXISTING SITE CONDITIONS AND PERMANENT REFERENCE MARKS TO ENABLE RECOGNITION OF THE AREA BEING PHOTOGRAPHED, AND SHALL REPRESENT A COMPRENENSIVE VEW OF THE SITE PRIOR TO DEVELOPMENT.

3. THE CONTRACTOR SHALL ESTABLISH A STAGING AREA ON A PORTION OF THE AREA TO BE DISTURBED FOR THE OVERNIGHT STORAGE OF EQUIPMENT AND STOCKPILING OF MATERIALS.

4. IN THE STAGING AREA, THE CONTRACTOR SHALL HAVE A STOCKPILE OF MATERIALS REQUIRED TO CONTROL EROSION ON–SITE TO BE USED TO SUPPLEMENT OR REPAIR EROSION CONTROL DEVICES. THESE MATERIALS SHALL INCLUDE, BUT ARE NOT LIMITED TO: HAYBALES, SILT FENCE AND CRUSHED STONE.

5. A TEMPORARY STONE CONSTRUCTION ENTRANCE IS REQUIRED TO PREVENT TRACKING OF SILT, MUD, ETC. ONTO EXISTING ROADS. THE STONE SHALL BE REPLACED REGULARLY AS WELL AS WHEN THE STONE IS SILT LADEN OR EQUIPMENT IS OBSERVED TO BE TRACKING SOIL ONTO THE ROADWAYS. RIVER ST. SHALL BE INSPECTED AT THE END OF EACH WORK DAY AND SWEPT AS NEEDED. MATERIAL SHALL NOT BE ALLOWED ON RIVER ST. AS IT FLOWS DIRECTLY INTO THE BROOK

6. THE CONTRACTOR IS RESPONSIBLE FOR EROSION CONTROL ON SITE AND SHALL UTILIZE EROSION CONTROL MEASURES WHERE NEEDED, REGARDLESS OF WHETHER THE MEASURES ARE SPECIFIED HEREIN, ON THE PLAN OR IN ANY ORDER OF CONDITIONS.

## GENERAL CONSTRUCTION REQUIREMENTS:

1. NO ON–SITE DISPOSAL OF SOLID WASTE, INCLUDING BUILDING MATERIALS IS ALLOWED ON SITE. THE BURIAL OF STUMPS, CONSTRUCTION DEBRIS OR OTHER MATERIALS SHALL NOT BE ALLOWED ANYWHERE ON–SITE.

2. NO MATERIALS SHALL BE DISPOSED OF INTO THE EXISTING OR PROPOSED DRAINAGE SYSTEMS OR BROOK. ALL CONTRACTORS INCLUDING: CONCRETE SUPPLIERS, PAINTERS AND PLASTERERS, SHALL BE INFORMED THAT THE CLEANING OF EQUIPMENT IS PROHIBITED IN AREAS WHERE THE WASH–WATER WILL DRAIN DIRECTLY TO THE SITE DRAINAGE SYSTEMS OR DIRECTLY INTO FORT POND BROOK.

3. CONTRACTOR IS RESPONSIBLE FOR DUST CONTROL WHICH SHALL INCLUDE STREET SWEEPING OF ALL PAVED SURFACES WITHIN THE SITE AND OFF–SITE AREAS THAT ARE IMPACTED BY SITE CONSTRUCTION ON A REGULAR BASIS, AS NEEDED.

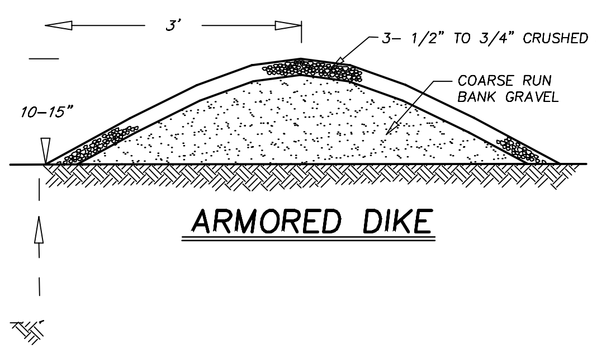


ARMORED DIKE

## GRASS AND SLOPE COVER SPECIFICATIONS

1. All disturbed areas, including slopes and the detention basin, shall be graded and stabilized by planting or other method as shown or specified on the plans.
2. A minimum of 6" of loam shall be applied to all surfaces to be seeded. Loam shall be uniformly applied, shaped and smoothed.
3. Loam acidity shall be checked and adjusted to a pH of 6.5, apply lime at a minimum rate of 50 lbs per 1,000 square feet, if necessary. (If permitted by the Orders of Conditions only).
4. Organic–slow release fertilizer of a type 5–2–2 applied at a rate of 50 lbs per 500 square feet. (If permitted by the Orders of Conditions only).
5. Rake a seed bed using a york rake or hand raking to a minimum depth of 3" thoroughly incorporating lime and fertilizer.
6. Seeding may be performed by hand, mechanical or tractor mounted spreader. Hydroseeding is recommended.
7. Seeding before April 15 or after November 1, shall be reapplied between these dates if a minimum germination of 90% determined by surface area coverage, has not occurred or if the surface area has eroded or become un–stabilized.
8. SEEDING:
   A. HAND SEEDING:
      1. Seed shall be applied by hand or broadcast spreader to provide a uniform distribution of seed.
      2. Seed shall be lightly raked into a depth of 1/2"–1", with all raking to be perpendicular to the slope.
      3. Seed is to be rolled with a water ballast roller to insure contact of seed with soil, do not compact soil.
      4. Area shall be mulched using seed–free straw to adequately cover the area to a depth of 1/2"–1", insuring a uniform cover of 75% of the surface area.
      5. Mulch shall be secured by means of secured landscape fabric, erosion control netting (3/4" – 1" mesh), or other biodegradable material which will insure adequate cover until the surface has grown to 90% germination, or according to the manufacturer's instructions.
   B. HYDROSEEDING:
      1. Hydroseeding is encouraged for all areas, especially for large areas and steep slopes.
      2. Hydroseeding shall be performed in a single uniform layer.
      3. A track equipped machine shall travel perpendicular to any slope to provide shall compacted surface depressions for hydroseeding to catch. Such tracks shall be a minimum of three (3') feet on center for the total length of the slope.
      4. Application rates on slopes greater than 3:1 (horizontal to vertical) or greater shall have a minimum seeding rate of 4lbs/1000sf.
      5. A latex or fiber tackifier shall be used on all areas at the rate recommended by the manufacturer and on all slopes identified above (No. 4), a minimum rate of 50 lbs. of tackifier per 500 gals of water shall be used.
      6. Fertilizer and lime may be incorporated into the hydroseed mixture in the quantities and type identified previously. (If permitted by the Orders of Conditions only).
9. SEED MIXTURE
   A. All seed shall be of the previous year's crop and shall have a quantified mixture analysis attached. No more than 10% of total mixture shall consist of weed seed species.
   B. SEED MIXTURE TYPE "A": Seed mixtures for lawn areas shall consist of a standard lawn mix containing a minimum of 80% perennial species, and shall conform to the following standards:

      Minimums (by total weight of mix):
      40% Kentucky Bluegrass
      20% Chewings Fescue
      20% Perennial Ryegrass
      20% Annual Rye or other annual species*

   * No more than 20% of the total mix, by weight, shall consist of annual rye or other annual species.
   Apply at a rate of 4 lbs per 1,000 square feet, or 170 lbs. per acre.

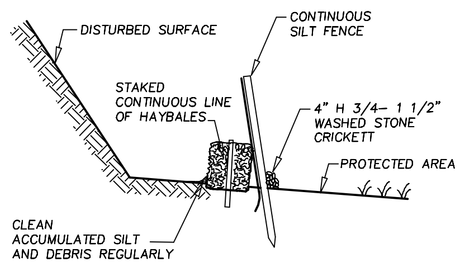


SILTATION BARRIER

NOT TO SCALE

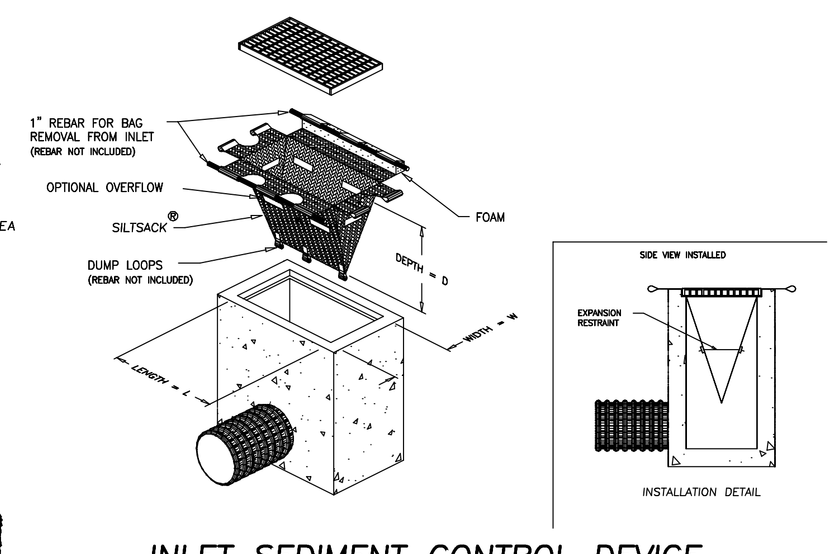


INLET SEDIMENT CONTROL DEVICE

NOT TO SCALE

NOTE : LINES OF HAYBALES TO BE PERPENDICULAR TO RUNOFF FLOW DIRECTION

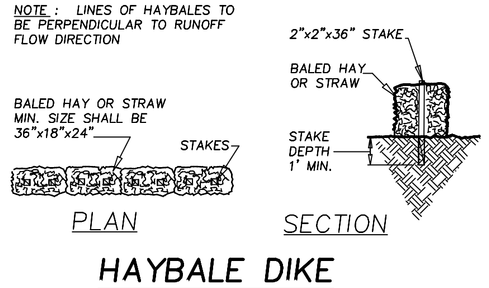


HAYBALE DIKE

NOT TO SCALE

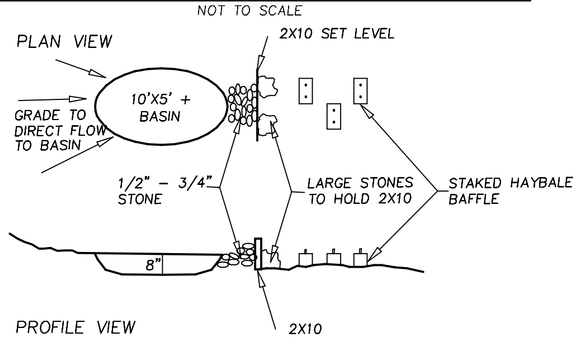


TEMPORARY DEWATERING AREA

NOT TO SCALE

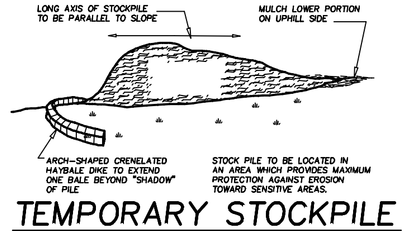


TEMPORARY STOCKPILE

NOT TO SCALE

# DRAINAGE SYSTEM OPERATIONS & MAINTENANCE PLAN

## STORM WATER COLLECTION SYSTEM:

THE STORMWATER COLLECTION SYSTEM SERVING THIS SITE IS INTENDED TO BOTH COLLECT STORM WATER RUNOFF AND TO PROVIDE PARTIAL TREATMENT OF THE STORMWATER PRIOR TO ITS COLLECTION INTO THE OFFSITE DETENTION BASIN AND RECHARGE INTO THE GROUNDWATER. THIS SYSTEM COLLECTS RUNOFF GENERATED FROM THE SITE THROUGH THE USE OF CATCHBASINS. EACH CATCHBASIN IS EQUIPPED WITH A FOUR (4') FOOT DEEP SUMP (WHICH COLLECTS SEDIMENTS AND DEBRIS) AND A OIL/GAS TRAP (WHICH PREVENTS THE INTRUSION OF HYDROCARBONS AND OTHER FLOATING MATERIALS FROM ENTERING THE DRAINAGE SYSTEM). WHEN THESE TWO SIMPLE CONTROL MECHANISMS ARE FUNCTIONING PROPERLY THEY PROVIDE FOR A REDUCTION OF CONTAMINANTS AND DEBRIS ENTERING THE STORMWATER COLLECTION AND RECHARGE SYSTEMS, AND THEREFORE DOWNSTREAM RECEIVING WATERS/WETLANDS.

THIS SITE MAY ALSO BE SERVED BY INFILTRATION SYSTEMS WHICH COLLECT THE GENERATED RUNOFF AND RECHARGE IT TO THE GROUND, THUS PROVIDING RECHARGE SIMILAR TO THAT OF THE PRE–DEVELOPMENT CONDITION AND FILTERING THE RUNOFF AS IT TRAVELS THROUGH THE EXISTING SOILS TO THE GROUNDWATER TABLE.

BOTH OF THE ABOVE–DESCRIBED SYSTEMS RELY UPON PROPER MONITORING, OPERATIONS AND MAINTENANCE TO FUNCTION AS DESIGNED AND INTENDED. A PROGRAM OF MONITORING, OPERATIONS AND MAINTENANCE MUST BE ON–GOING THROUGHOUT THE LIFE AND USE OF THE SITE, AND IS THE OWNER'S RESPONSIBILITY SOLELY. THESE ACTIVITIES, AS DESCRIBED BELOW, ARE TO BE INITIATED AFTER COMPLETION OF THE PROJECT AND ARE NOT RELATED TO THE CONSTRUCTION OF THE SITE, EXCEPT AS SPECIFICALLY PROVIDED. THIS PLAN IS SPECIFICALLY FOR SITE–RELATED ACTIVITIES, NOT ACTIVITIES WHICH ARE INTERIOR TO BUILDINGS, THOUGH THERE ARE NECESSARY IMPLICATIONS AND CORRELATION'S BETWEEN THE TWO.

MONITORING:

THE DRAINAGE SYSTEMS ARE REQUIRED TO BE MONITORED BY THE OWNER, WHO SHALL DIRECT AN INDIVIDUAL TO ACT AS THE SYSTEM'S MANAGER. THE NAME, ADDRESS AND DAY AND NIGHT (OR EMERGENCY) TELEPHONE NUMBER OF THIS PERSON OR ENTITY SHALL BE PROVIDED TO THE ACTON BOARD OF HEALTH PRIOR TO THE ISSUANCE OF A CERTIFICATE OF COMPLIANCE OF CONSTRUCTION. THIS INDIVIDUAL SHALL BE REQUIRED TO KEEP A LOG OF ALL REQUIRED INSPECTIONS, OBSERVATIONS AND MAINTENANCE ACTIVITIES DRAINAGE SYSTEM COMPONENTS SHALL BE REFERRED TO BY SPECIFIC LOCATION OR THE DESIGN PLAN DESIGNATION, (E.G. CTB # 2B ) TO AVOID CONFUSION OR MIS–IDENTIFICATION. THE LOG SHALL BE MADE AVAILABLE TO THE CONSERVATION COMMISSION WITHIN TEN (10) DAYS OF A WRITTEN REQUEST BY THAT AGENCY.

MONITORING FOR THIS SITE SHALL CONSIST OF THE FOLLOWING:

1. ALL CATCHBASINS SHALL BE INSPECTED TO ENSURE THEY ARE WATER–TIGHT (HOLDING WATER), HAVE ADEQUATE SUMP CAPACITY, ALL OIL/GAS TRAPS ARE IN–PLACE, ALL GRATES AND FRAMES ARE FREE FROM STRUCTURAL DAMAGE, AND ARE DRAINING FREELY. THIS MONITORING SHALL OCCUR AT A MINIMUM OF FOUR (4) MONTH INTERVALS (QUARTERLY).
2. ALL DRAINAGE MANHOLES SHALL BE INSPECTED TO ENSURE THAT THEY ARE WATER–TIGHT, ALL LIDS AND FRAMES ARE FREE FROM STRUCTURAL DAMAGE, ARE DRAINING FREELY AND ARE NOT PONDING WATER. THIS MONITORING SHALL OCCUR A MINIMUM OF ONCE PER YEAR.
3. OTHER DRAINAGE SYSTEMS SHALL BE INSPECTED TO ENSURE THAT NO EROSION IS OCCURRING AT OUTLETS, ALL OUTLETS ARE FREE–FLOWING AND NO DAMAGE HAS OCCURRED AS PART OF SITE MAINTENANCE OR ACTIVITIES.

## OPERATIONS:

1. GOOD HOUSE KEEPING AND MATERIAL MANAGEMENT REDUCE THE RISK OF SPILLS OR OTHER ACCIDENTAL EXPOSURE OF MATERIALS AND SUBSTANCES TO STORMWATER RUNOFF. A POLLUTION PREVENTION PLAN SHALL BE DEVELOPED WHICH SHALL INCLUDE THE FOLLOWING AT A MINIMUM:

   A. ALL MATERIALS STORED ON–SITE WILL BE STORED IN A NEAT, ORDERLY MANNER IN THEIR APPROPRIATE CONTAINERS AND, IF POSSIBLE, UNDER A ROOF OR OTHER ENCLOSURE.
   B. PRODUCTS SHALL BE KEPT IN THEIR ORIGINAL CONTAINERS WITH THE ORIGINAL MANUFACTURER'S LABEL.
   C. SUBSTANCES SHOULD NOT BE MIXED WITH ONE ANOTHER, UNLESS RECOMMENDED BY THE MANUFACTURER.
   D. WHENEVER POSSIBLE, ALL OF A PRODUCT WILL BE USED UP BEFORE DISPOSING OF A CONTAINER.
   E. THE SYSTEM'S MANAGER SHALL INSPECT THE SITE DAILY TO ENSURE PROPER USE AND DISPOSAL OF MATERIALS ONSITE, DURING ALL CONSTRUCTION PHASES
   F. ORIGINAL MATERIALS LABELS AND MATERIAL SAFETY DATA SHEETS SHALL BE KEPT; THEY RETAIN IMPORTANT INFORMATION.
   G. PETROLEUM PRODUCTS:
      1) ALL ONSITE VEHICLES AND PARKING AREAS SHALL BE REGULARLY MONITORED FOR LEAKS AND RECEIVE REGULAR PREVENTIVE MAINTENANCE TO PREVENT LEAKAGE.
      2) PETROLEUM PRODUCTS SHALL BE STORED UNDER COVER AND SHALL BE IN TIGHTLY SEALED CONTAINERS WHICH ARE CLEARLY LABELED.
   H. FERTILIZERS:
      1) FERTILIZERS SHALL ONLY BE USED IN THE MINIMUM AMOUNTS AS RECOMMENDED BY THE MANUFACTURER.
      2) THE CONTENTS OF ANY UN–USED FERTILIZER SHALL BE TRANSFERRED TO A CLEARLY LABELED, SEALABLE PLASTIC BIN, TO AVOID SPILLAGE.
   I. PAINTS, SOLVENTS.
      1) ALL PAINTS AND SOLVENTS SHALL BE STORED IN ORIGINAL MANUFACTURER'S CONTAINERS IN A COVERED LOCATION.
      2) THE USE OF PAINTS AND SOLVENTS SHALL, WHENEVER POSSIBLE, BE LIMITED TO SERVICE OR STORAGE BAYS AND NOT IN PARKING OR ACCESS WAYS THAT ARE TRIBUTARY TO THE DRAINAGE SYSTEM.
2. SPILL CONTROL PRACTICES:
   A. MANUFACTURER'S RECOMMENDED METHODS SHALL BE CLEARLY POSTED FOR SPILL CLEAN–UP AND SITE PERSONNEL SHALL BE MADE AWARE OF THE PROCEDURES AND THE LOCATIONS OF CLEAN–UP INFORMATION AND SUPPLIES.
   B. MATERIAL AND EQUIPMENT NECESSARY FOR SPILL CLEAN–UP WILL BE KEPT ON–SITE IN A DESIGNATED MATERIAL STORAGE AREA. EQUIPMENT WILL INCLUDE, BUT NOT BE LIMITED TO, BROOMS, DUST PANS , MOPS, RAGS, GLOVES, GOGGLES, ABSORBENT MATERIALS, SAND, SAWDUST AND PLASTIC & METAL TRASH CONTAINERS SPECIFICALLY KEPT AND LABELED FOR THIS PURPOSE.
   C. ALL SPILLS WILL BE CLEANED–UP IMMEDIATELY AFTER DISCOVERY.
   D. SPILLS OF TOXIC OR HAZARDOUS MATERIAL OR NATURE WILL BE REPORTED TO THE APPROPRIATE STATE, LOCAL OR FEDERAL AGENCY, AS REQUIRED BY–LAW.
   E. THE SPILL PREVENTION PLAN WILL INCLUDE PROVISIONS TO ADAPT THE PLAN TO ENSURE THAT SPILLS WILL NOT REOCCUR, AND HOW TO CLEANUP THE SPILL IF THERE IS ANOTHER ONE.
3. SALT USE SITE–WIDE SHALL BE APPLIED TO THE MINIMUM EXTENT POSSIBLE TO MAINTAIN SAFE CONDITIONS, AND ONLY IF NOT SPECIFICALLY EXCLUDED BY ANY SPECIAL CONDITIONS AS PART OF AN ORDER OF CONDITIONS ISSUED BY THE CONSERVATION COMMISSION.

## MAINTENANCE:

1. PARKING AREAS, ROAD AND ACCESS WAYS AND GUTTERS SHALL BE SWEPT CLEAN OF DEBRIS AND ACCUMULATION ON A REGULAR BASIS. AT A MINIMUM, A SPRING AND FALL CLEANING SCHEDULE IS RECOMMENDED.
2. ALL CATCHBASINS SHALL HAVE THE SUMPS CLEANED AT ANY TIME OF THE YEAR WHEN 2" OR LESS SPACE EXISTS BELOW THE OUTLET INVERT, OR A MINIMUM OF ONCE PER YEAR, REGARDLESS OF SUMP ACCUMULATION. ALL DEBRIS FROM THE CLEANING SHALL BE DISPOSED OF OFF–SITE AND IN A MANNER AS PROSCRIBED BY LAW.
3. ALL HYDROCARBON TRAPS SHALL BE CHECKED FOR PHYSICAL INTEGRITY AND SEALED IMMEDIATELY AFTER EACH CATCHBASIN CLEANING.
4. OIL ABSORBING "PILLOWS" OR OTHER MEANS SHALL BE USED TO REMOVE ACCUMULATIONS OF HYDROCARBONS (OIL/GREASE) IN CATCHBASINS THAT ARE REGULARLY OBSERVED TO CONTAIN HYDROCARBONS, WHICH DO NOT EVAPORATE BETWEEN INSPECTIONS.
5. ALL BROKEN, LEAKING OR OTHERWISE DAMAGED STRUCTURES SHALL BE REPAIRED PROMPTLY UPON DISCOVERY. CATCHBASIN GRATES OR MANHOLE LIDS SHALL BE REPLACED WITH SIMILAR WEIGHT AND LOADING CHARACTERISTIC REPLACEMENT PARTS.
6. ALL EROSION SHALL BE REPAIRED. THE REPLACEMENT OF ANY PIPE OR DRAINAGE STRUCTURE SHALL MATCH THE ORIGINAL DESIGN SPECIFICATIONS.

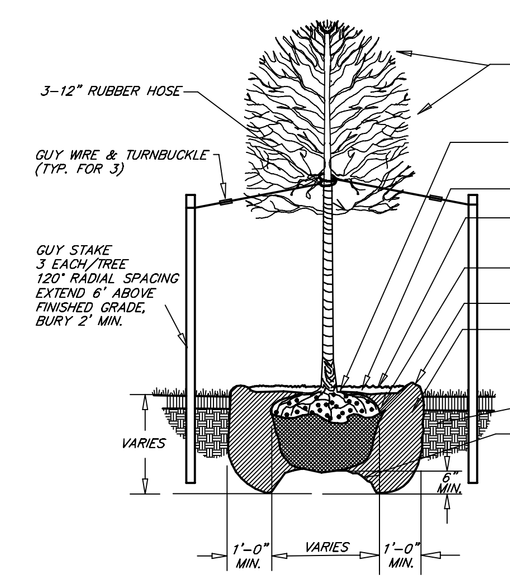


DECIDUOUS TREE PLANTING

NOT TO SCALE

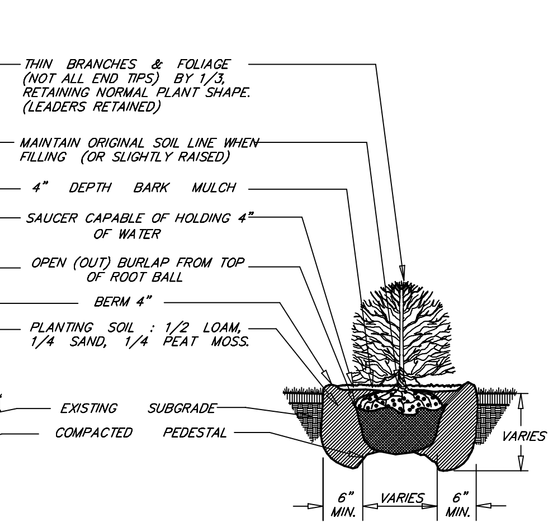


SHRUB PLANTING

NOT TO SCALE

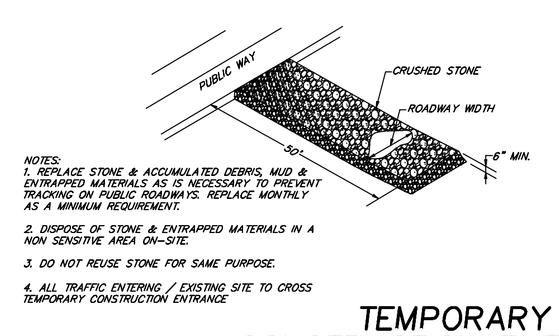


NOTES:
1. REPLACE STONE & ACCUMULATED DEBRIS, MUD & ENTRAPPED MATERIALS AS IS NECESSARY TO PREVENT TRACKING ON PUBLIC ROADWAYS. REPLACE MONTHLY AS A MINIMUM REQUIREMENT.

2. DISPOSE OF STONE & ENTRAPPED MATERIALS IN A NON SENSITIVE AREA ON–SITE.

3. DO NOT REUSE STONE FOR SAME PURPOSE.

4. ALL TRAFFIC ENTERING / EXISTING SITE TO CROSS TEMPORARY CONSTRUCTION ENTRANCE

NOTE: PURPOSE IS TO REMOVE MUD FROM TIRES OF CONSTRUCTION VEHICLES

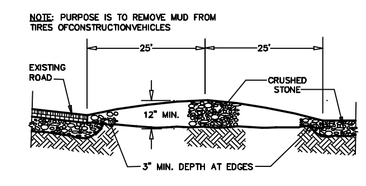


TEMPORARY CONSTRUCTION ENTRANCE

NOT TO SCALE

EROSION AND SEDIMENTATION CONTROL PLAN

40B Development Plan in ACTON , MASS.

PREPARED FOR:

Lothrop Mill LLC

SCALE: AS SHOWN DATE: June 2007

PLACES Site Consultants, Inc.
PLANNING LANDSCAPE ARCHITECTURE CIVIL ENGINEERING SURVEYING
694 MAIN STREET, SUITE 3
HOLDEN, MA 01520–1862
508.829.0333 Fax 508.829.0904
EMAIL places@verizon.net

PROJECT No.: 07–396 PLAN No. 396 NOI–3