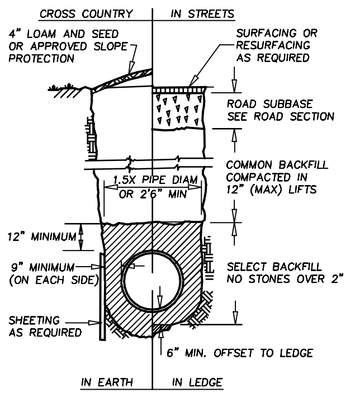


## DRAINAGE TRENCH

NOT TO SCALE

NOTES:

1. ROADWAY PATCH AND BASE/SUB-BASE SHALL BE INSTALLED AS DIRECTED BY THE DPW REGULATIONS.

2. BEDDING, BLANKET, & BACKFILL MATERIALS SHALL BE COMPACTED TO 90% MAXIMUM DENSITY (MODIFIED PROCTOR) AT OPTIMUM MOISTURE CONTENT FOR BOTH CROSS COUNTRY AND ROADWAY INSTALLATION.

3. ALL MATERIALS, INSTALLATION TECHNIQUES, PROCEDURES, INSPECTIONS, AND TESTING SHALL BE IN COMPLIANCE WITH THE REQUIREMENTS OF THE SEWER RULES AND REGULATIONS UNLESS OTHERWISE APPROVED BY THE SEWER SUPERINTENDENT IN WRITING.

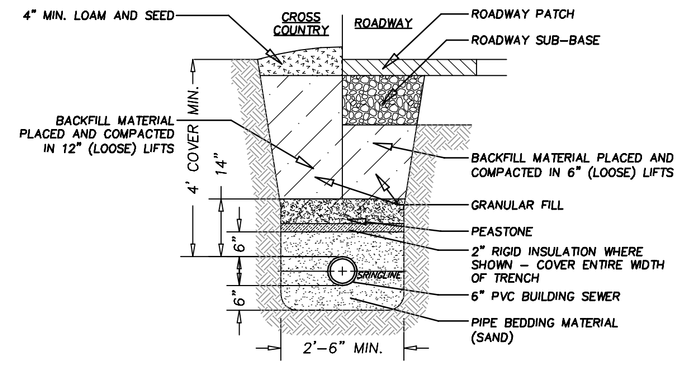


## BUILDING SEWER TRENCH

NOT TO SCALE

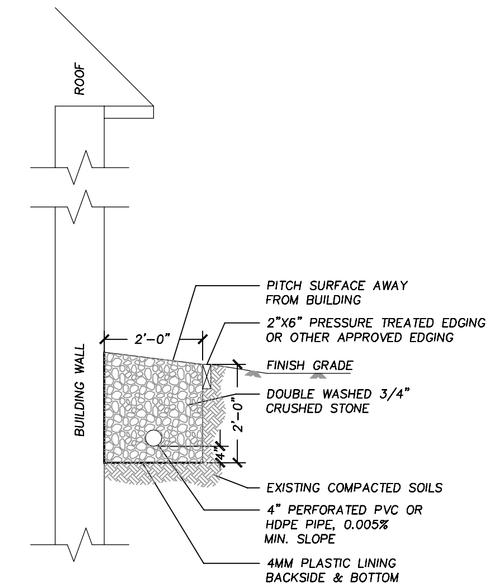


## DRIP-LINE TRENCH DRAIN

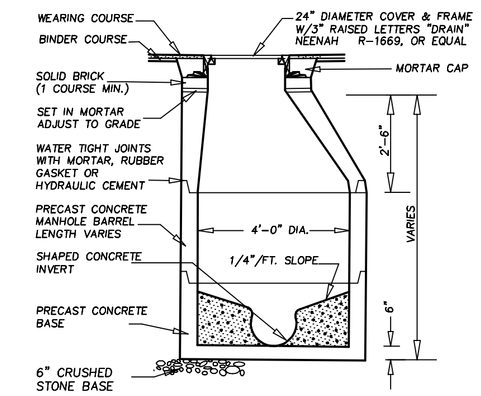


## DRAIN MANHOLE DETAIL

NOT TO SCALE

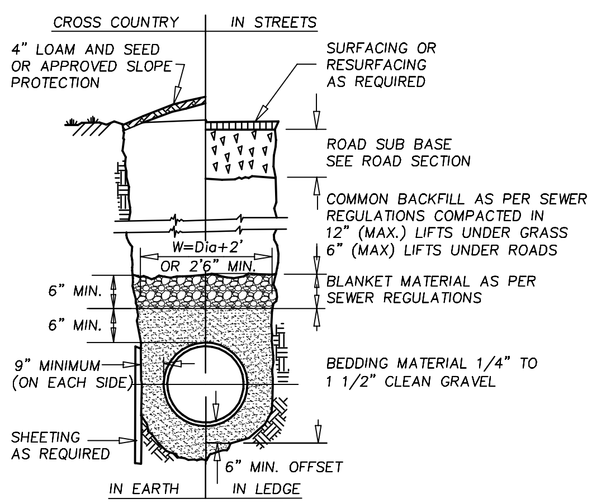


NOTE:
1. BOTH THE BEDDING AND BLANKET MATERIAL SHALL BE COMPACTED IN 6" LOOSE LIFTS TO 90% MAXIMUM DRY DENSITY PER THE MODIFIED PROCTOR TEST.
2. ALL UNSUITABLE MATERIAL SHALL BE REMOVED AND REPLACED WITH GRAVEL OR OTHER SUITABLE MATERIAL COMPACTED TO 90% MAXIMUM DENSITY (MODIFIED PROCTOR).

## TYPICAL SEWER TRENCH

NOT TO SCALE

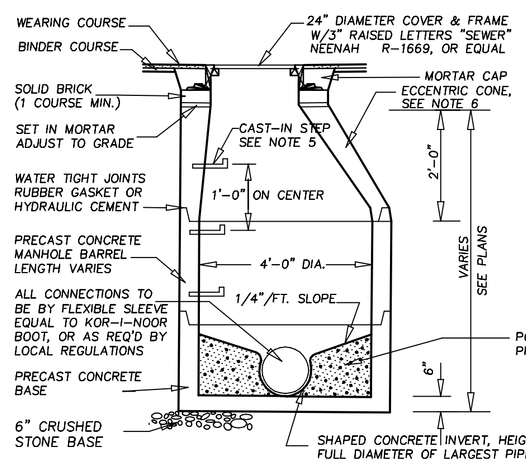


NOTES:
1. CONCRETE: 4,000 PSI MINIMUM AFTER 28 DAYS.

2. REINFORCED STEEL CONFORMS TO LATEST ASTM A185 SPEC. 0.12 SQ. IN./LINEAL FT. AND 0.12 SQ. IN. (BOTH WAYS) BASE BOTTOM.

3. H-20 DESIGN LOADING PER AASHTO HS-20-44; ASTM C478 SPEC FOR "PRECAST REINFORCED CONCRETE MANHOLE SECTIONS."

4. BUTYL RESIN SECTION JOINT CONFORMS TO LATEST ASTM C443 SPEC.

5. STEEL REINFORCED COPOLYMER POLYPROPYLENE PLASTIC STEP CONFORMS TO LATEST ASTM C478 SPEC.

6. IN AREAS WHERE COVER IS 3' OR LESS ABOVE PIPES, USE FLAT TOP SLAB IN LIEU OF ECCENTRIC CONE SECTION.

## SEWER MANHOLE DETAIL

NOT TO SCALE

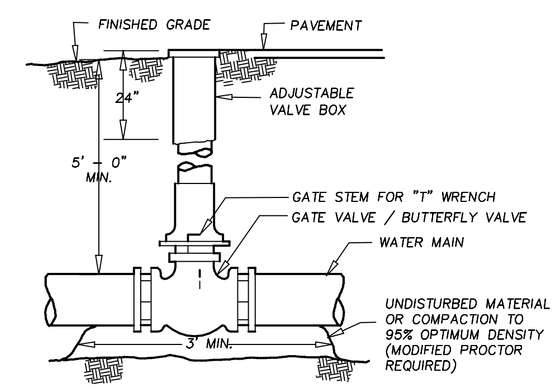


## GATE VALVE DETAIL

NOT TO SCALE

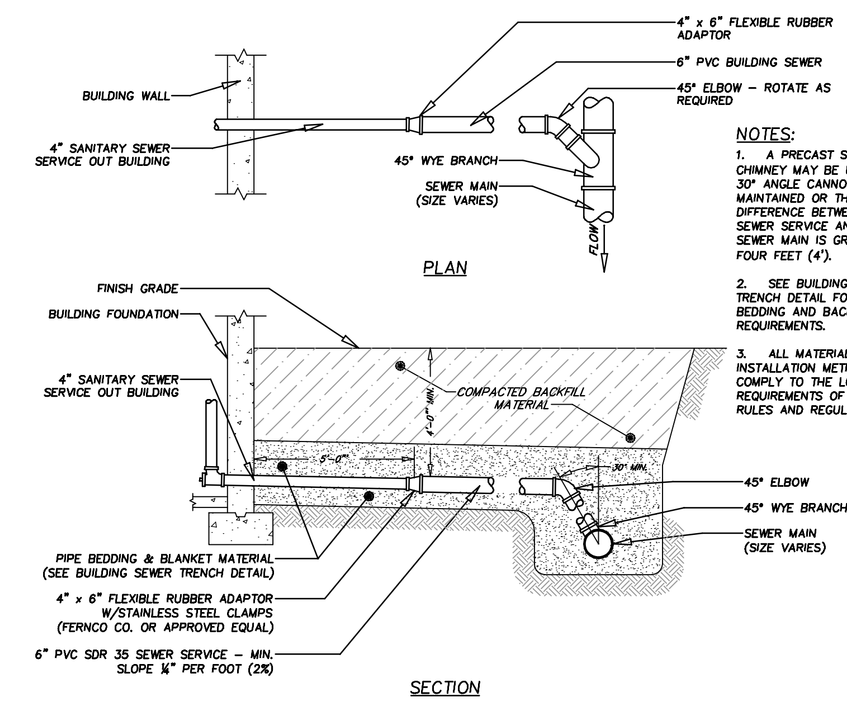


NOTES:

1. A PRECAST SEWER CHIMNEY MAY BE USED IF THE 30° ANGLE CANNOT BE MAINTAINED OR THE VERTICAL DIFFERENCE BETWEEN THE SEWER SERVICE AND THE SEWER MAIN IS GREATER THAN FOUR FEET (4').

2. SEE BUILDING SEWER TRENCH DETAIL FOR PIPE BEDDING AND BACKFILLING REQUIREMENTS.

3. ALL MATERIALS AND INSTALLATION METHODS SHALL COMPLY TO THE LOCAL REQUIREMENTS OF SEWER USE RULES AND REGULATIONS.

## BUILDING SEWER CONNECTION

NOT TO SCALE

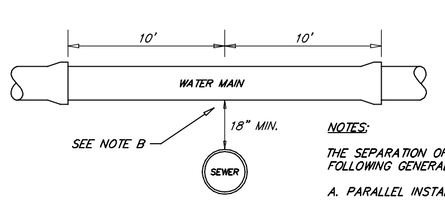


WATER AND SEWER CROSSING

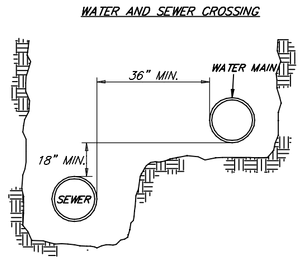


WATER AND SEWER LAID PARALLEL

NOTES:

THE SEPARATION OF WATER MAINS AND SEWERS SHALL COMPLY WITH THE FOLLOWING GENERAL REQUIREMENTS.

A. PARALLEL INSTALLATION:

1. NORMAL CONDITIONS: THE INSIDE EDGE OF A WATER MAIN SHALL BE LAID AT LEAST 10 FEET HORIZONTALLY FROM THE INSIDE EDGE OF ANY SANITARY SEWER, STORM SEWER OR SEWER MANHOLE.

2. WHEN LOCAL CONDITIONS PREVENT A HORIZONTAL SEPARATION OF 10 FEET, ONE OF TWO METHODS MAY BE EMPLOYED. IN BOTH CASES THE INVERT OF THE WATER LINE MUST BE AT LEAST 18" ABOVE THE CROWN OF THE SEWER LINE.

(a) LAY WATER AND SEWER IN SEPARATE TRENCHES

(b) LAY THE WATER AND SEWER IN THE SAME TRENCH WITH THE WATER MAIN AT ONE SIDE ON A BENCH OF UNDISTURBED EARTH WITH A MINIMUM HORIZONTAL SEPARATION FROM INSIDE PIPE TO INSIDE PIPE OF 36"

B. CROSSINGS:

1. WHEN SEWERS MUST CROSS UNDER WATER MAINS, THE SEWER LAID SUCH THAT THE INVERT OF THE WATER LINE IS AT LEAST 18 INCHES ABOVE THE CROWN OF THE SEWER LINE.

2. WHEN THE SEWER ELEVATION CANNOT BE VARIED TO MEET THE REQUIREMENT, THE WATER LINE MUST BE RELOCATED OR RECONSTRUCTED WITH MECHANICAL JOINT CEMENT LINED DUCTILE IRON PIPE FOR A DISTANCE OF 10 ft ON EACH SIDE OF THE SEWER.

3. WHEN IT IS IMPOSSIBLE TO OBTAIN EITHER OR BOTH OF THE ABOVE REQUIREMENTS, BOTH THE WATER AND SEWER LINES SHALL BE CONSTRUCTED OF MECHANICAL JOINT CEMENT LINED DUCTILE IRON PIPE OR OTHER EQUIVALENT MATERIAL. BOTH PIPES SHALL BE PRESSURE TESTED BY AN APPROVED METHOD TO ASSURE WATER TIGHTNESS OR BOTH PIPES SHALL BE ENCASED IN CONCRETE.

## SEWER AND WATER IN SAME TRENCH/CROSSING

NOT TO SCALE

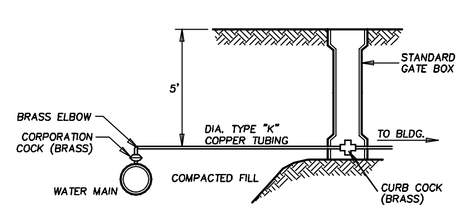


## WATER SERVICE CONNECTION

NOT TO SCALE

SEWER NOTES:

1. ALL WATER CONSTRUCTION MATERIALS, WHETHER SHOWN OR NOT, SHALL COMPLY WITH THE LATEST VERSION OF THE TOWN OF ACTON SEWER REGULATIONS.

WATER NOTES:

1. ALL WATER CONSTRUCTION MATERIALS, WHETHER SHOWN OR NOT, SHALL COMPLY WITH THE LATEST VERSION OF THE TOWN OF ACTON WATER REGULATIONS.

2. WATER SERVICE TO THE EXISTING BUILDINGS SHALL BE DISCONTINUED AT THE MAIN IN ACCORDANCE WITH THE ACTON WATER DISTRICT.

3. ALL WATER CONSTRUCTION MATERIALS, WHETHER SHOWN OR NOT, SHALL COMPLY WITH THE LATEST VERSION OF THE TOWN OF ACTON DISTRICT WATER REGULATIONS.

# WATER, SEWER, AND CONSTRUCTION DETAILS

40B Development Plan in
ACTON , MASS.

PREPARED FOR:

Lothrop Mill LLC

SCALE: AS SHOWN DATE: June 2006

PLACES
Site Consultants, Inc.
PLANNING LANDSCAPE ARCHITECTURE CIVIL ENGINEERING SURVEYING
694 MAIN STREET, SUITE 3
HOLDEN, MA 01520-1862
508.829.0333 Fax 508.829.0904
EMAIL places@verizon.net



PROJECT No.: 07-396 PLAN No. 396 NOI-4