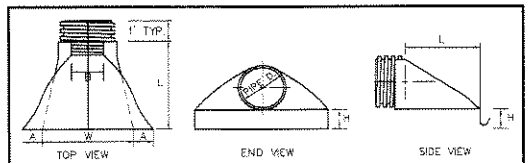

PIPE DIAMETER	DIMENSION (inches)					
	PART NO.	A(±1/8)	B MAX	H(±1/8)	L(1/2±1/8)	W(2±1/8)
12" and 15"	1210 NP	6.5	10	6.5	25	29
18"	1810 NP	7.5	13	6.5	32	35
24"	2410 NP	7.5	18	6.5	38	45
36"	3610 NP	10.5	NA	7.0	53	69

ADS END SECTION DIMENSIONS

NOT TO SCALE

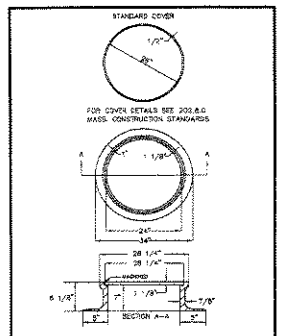

MANHOLE FRAME AND COVER

NOT TO SCALE

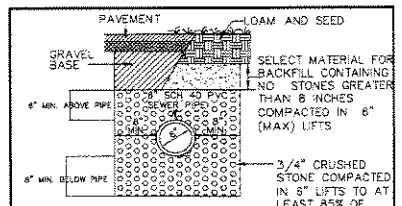

TYPICAL SEWER TRENCH DETAIL

NOT TO SCALE

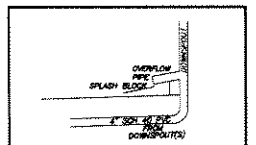

DOWNSPOUT DETAIL

NOT TO SCALE

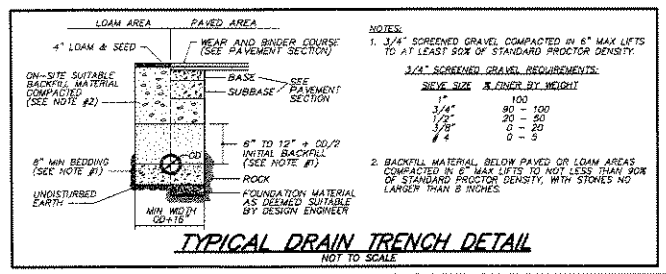

NOTES:
1. 3/4" SCREENED GRAVEL COMPACTED IN 6" MAX LIFTS TO AT LEAST 90% OF STANDARD PROCTOR DENSITY.

3/4" SCREENED GRAVEL REQUIREMENTS:

SIEVE SIZE	% FINER BY WEIGHT
1"	100
3/4"	90 - 100
1/2"	20 - 50
3/8"	0 - 20
# 4	0 - 5

2. BACKFILL MATERIAL BELOW PAVED OR LOAM AREAS COMPACTED IN 6" MAX LIFTS TO NOT LESS THAN 90% OF STANDARD PROCTOR DENSITY, WITH STONES NO LARGER THAN 8 INCHES.

TYPICAL DRAIN TRENCH DETAIL

NOT TO SCALE

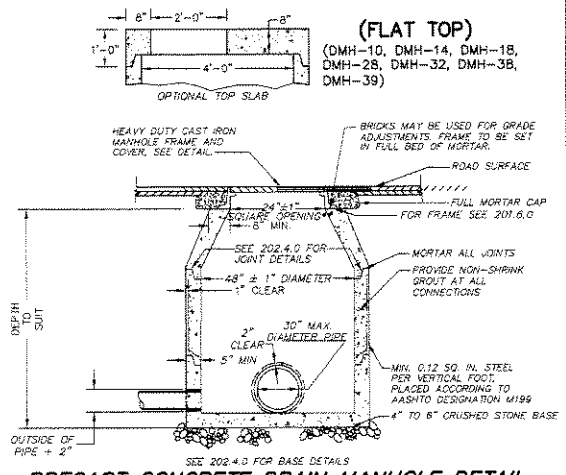

PRECAST CONCRETE DRAIN MANHOLE DETAIL

NOT TO SCALE

NOTES
1. MANHOLE TO CONFORM TO MASS. D.P.W. STANDARD 202.4.0.
2. FACE OF PIPE FLUSH OR NOT TO PROJECT MORE THAN 4" FROM FACE OF WALL ALONG CENTERLINE OF PIPE.
3. FOR DESCRIPTION, MATERIALS AND CONSTRUCTION METHOD, SEE SPECIFICATIONS.

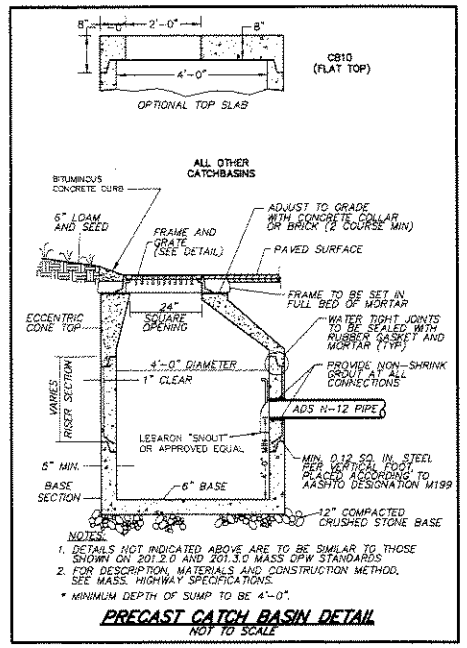

NOTES:
1. DETAILS NOT INDICATED ABOVE ARE TO BE SIMILAR TO THOSE SHOWN ON 201.2.0 AND 201.3.0 MASS DPW STANDARDS.
2. FOR DESCRIPTION, MATERIALS AND CONSTRUCTION METHOD, SEE MASS. HIGHWAY SPECIFICATIONS.

* MINIMUM DEPTH OF SUMP TO BE 4'-0".

PRECAST CATCH BASIN DETAIL

NOT TO SCALE

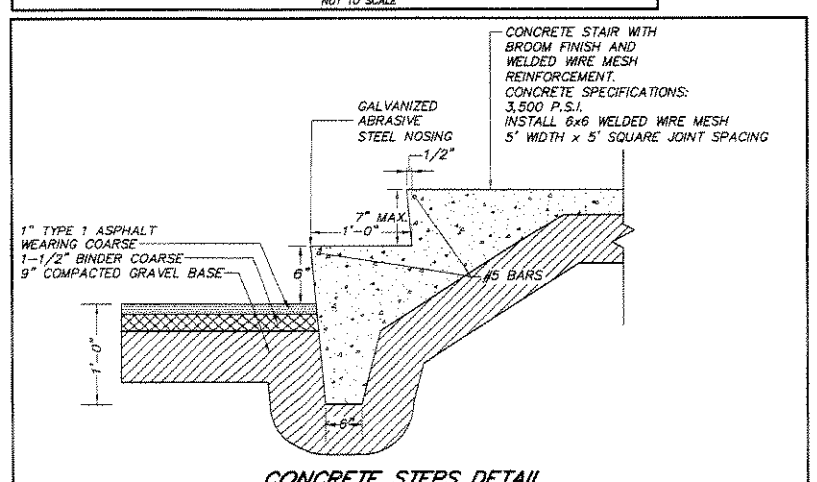

CONCRETE STEPS DETAIL

NOT TO SCALE

GENERAL NOTES

1. ALL UNDERGROUND UTILITIES SHOWN HEREON WERE COMPILED ACCORDING TO AVAILABLE RECORD PLANS FROM VARIOUS UTILITY COMPANIES AND PUBLIC AGENCIES AND ARE APPROXIMATE ONLY. ACTUAL LOCATIONS MUST BE DETERMINED IN THE FIELD BEFORE EXCAVATING, BLASTING, INSTALLING, BACKFILLING, GRADING, PAVEMENT RESTORATION OR REPAIRING. ALL UTILITY COMPANIES, PUBLIC AND PRIVATE, MUST BE CONTACTED INCLUDING THOSE IN CONTROL OF UTILITIES NOT SHOWN ON THIS PLAN. SEE CHAPTER 370, ACTS OF 1963 MASS. WE ASSUME NO RESPONSIBILITY FOR DAMAGE INCURRED AS A RESULT OF UTILITIES OMITTED OR INACCURATELY SHOWN. BEFORE PLANNING FUTURE CONNECTIONS, THE APPROPRIATE PUBLIC UTILITY ENGINEERING DEPARTMENT MUST BE CONSULTED. DIG-SAFE TELE. NO. (888) 344-7233.
2. RIP RAP SHALL BE HARD DURABLE STONE, ANGULAR IN SHAPE AND BE GENERALLY WELL GRADED WITHIN A 25 LB. TO 125 LB. RANGE. RIP RAP SHALL BE PLACED OVER A 1' COARSE BANK RUN GRAVEL MATTE. RIP RAP SHOWN SCHEMATICALLY AT DRAINAGE OUTFLOWS SHALL BE PLACED FOR A 3' WIDTH AND 6' LENGTH.
3. ALL LIMITS OF WORK SHALL BE LOCATED IN THE FIELD PRIOR TO CONSTRUCTION. (SEE EROSION AND SEDIMENTATION CONTROL PLAN)
4. WATER SERVICE AND OTHER APPURTENANCES SHALL BE INSTALLED IN ACCORDANCE WITH THE ACTON WATER DISTRICT REQUIREMENTS.
5. ALL STUMPS AND OTHER CONSTRUCTION DEBRIS SHALL BE PROPERLY REMOVED FROM THE SITE.
6. ANY FILL MATERIAL USED SHALL BE FREE OF HAZARDOUS MATERIALS OR WASTE.
7. ALL DRAIN PIPES SHALL BE ADS N-12 DRAIN PIPE.
8. TRANSPORTATION OF FILL, EARTH, OR CONSTRUCTION DEBRIS TO OR FROM THE SITE SHALL BE RESTRICTED TO DAYTIME HOURS (9 AM TO 4 PM) MONDAY THROUGH FRIDAY.
9. TRAFFIC CONTROL SIGNS SHALL COMPLY WITH STANDARDS IN THE "MANUAL ON UNIFORM TRAFFIC CONTROL DEVICES (MUTCD).
10. CONSTRUCTION VEHICLES SHALL BE PROHIBITED FROM PARKING ON OR ALONG GREAT ROAD.
11. AN AS-BUILT PLAN, SHOWING ALL PAVEMENT, DRAINAGE AND UTILITIES, SHALL BE REQUIRED AT THE CONCLUSION OF CONSTRUCTION.
12. ELEVATIONS REFER TO NGVD OF 1929.
13. SUPPLEMENTARY DATA SUBMITTED UNDER THE RULES ARE AN INTEGRAL PART OF THE DEFINITIVE PLAN AND THAT NON-COMPLIANCE WITH THE PLAN PROFILES, UTILITIES, LAYOUTS AND RESTRICTIVE COVENANTS WILL VOID THE APPROVAL STATUS UNLESS A WAIVER IS SPECIFICALLY APPROVED BY THE BOARD IN WRITING.
14. IF ALTERATIONS (REMOVAL OF VEGETATION, GRADING, EXCAVATIONS, ETC.) ARE TO BE MADE WITHIN 100 FEET OF WETLAND AREAS (PONDS, BROOKS, SWAMPS, ETC.) OR WITHIN RIVERFRONT AREAS, A REQUEST FOR DETERMINATION OF APPLICABILITY OF THE WETLANDS PROTECTION ACT (c131 s40A) SHOULD BE FILED WITH THE TOWN'S CONSERVATION COMMISSION. THE FILING OF A NOTICE OF INTENT MAY BE REQUIRED AND LOCAL BYLAWS MAY APPLY.
15. THERE ARE NO PROPOSED LOCATIONS FOR UNDERGROUND STORAGE TANKS FOR FUELS OR OTHER CHEMICALS.
16. THE DRIVEWAYS SHALL BE BROUGHT TO FINISH GRADE WITH AT LEAST THE TOP 12 INCHES CONSISTING OF TWO SIX-INCH LAYERS OF WELL- COMPACTED BINDING GRAVEL THREE FEET WIDER ON EACH SIDE THAN REQUIRED PAVEMENT. (SEE CROSS SECTION)
17. THE COMPLETED GRAVEL SURFACE SHALL BE TREATED FOR THE FULL WIDTH OF THE DRIVEWAY WITH 1 1/2 INCHES OF TYPE 1, BITUMINOUS CONCRETE PAVEMENT APPLIED AS A BINDER COURSE. THE BINDER COURSE OF PAVEMENT SHALL BE EXPOSED TO ONE WINTER SEASON (NOV. 15 - APR. 30) PRIOR TO THE APPLICATION OF THE WEARING COURSE.
18. THE BINDER COURSE SHALL BE TREATED FOR THE FULL WIDTH OF THE DRIVEWAY WITH A WEARING SURFACE OF 1 1/2 INCHES OF TYPE 1, BITUMINOUS CONCRETE PAVEMENT APPLIED IN ONE COURSE, PRIOR TO INSTALLATION OF THE WEARING SURFACE ON THE DRIVEWAY. THE BINDER COURSE SHALL BE SWEPT CLEAN, DRIED IF NECESSARY, PATCHED AND TREATED WITH AN ASPHALT EMULSION OR TACK COAT TO ENSURE A SATISFACTORY BOND BETWEEN THE PAVEMENT COURSES. IN ORDER TO MINIMIZE DAMAGE TO THE WEARING SURFACE, THE WEARING COURSE SHOULD NOT BE APPLIED UNTIL ALL CONSTRUCTION ON THE BUILDINGS SERVED BY THE PROPOSED DRIVEWAY IS COMPLETED OR SUBSTANTIALLY COMPLETED.
19. NO PAVING MAY TAKE PLACE AFTER NOVEMBER 15TH OF ANY YEAR.
20. MONUMENTS SHALL BE SET. THE BOUNDS SHALL BE A SIX (6) INCH SQUARE BY A FOUR (4) FOOT LONG PIECE OF GRANITE SET FLUSH WITH THE FINISHED GRADE. NO PERMANENT MONUMENTS SHALL BE INSTALLED UNTIL ALL CONSTRUCTION THAT WOULD DESTROY OR DISTURB THE MONUMENTS IS COMPLETED.
21. THE CONTRACTOR SHALL APPLY FOR A PERMIT TO CONSTRUCT WITHIN A PUBLIC WAY FOR ALL WORK WITHIN THE PUBLIC RIGHT OF WAYS.
22. ALL CONSTRUCTION METHODS AND MATERIALS SHALL CONFORM TO THE MASSACHUSETTS HIGHWAY DEPARTMENT CONSTRUCTION STANDARDS.
23. THE CONTRACTOR WILL BE RESPONSIBLE TO PAVE THE NEW UNDERGROUND UTILITY TRENCHES THAT SERVE THIS DEVELOPMENT TO THE STANDARD PATCHING REQUIREMENTS FOR SECTION 2.4.3 OF THE TOWN'S SPECIFICATIONS FOR REGULATING CONSTRUCTION WITHIN PUBLIC WAYS.
24. RETAINING WALLS SHALL BE DESIGNED BY OTHERS.
25. FINAL BUILDING FOOTPRINT SUBJECT TO BUILDING INSPECTOR REVIEW.
26. IF BLASTING IS REQUIRED FOR ANY OF THE WORK SHOWN ON THE APPROVED PLAN, THE CONTRACTOR SHALL APPLY FOR AND OBTAIN A BLASTING PERMIT FROM THE ACTON FIRE DEPARTMENT PRIOR TO THE REMOVAL OF ANY LEDGE WHICH REQUIRES BLASTING IN ACCORDANCE WITH THE MASSACHUSETTS FIRE PREVENTION REGULATIONS AS AMENDED.
27. ALL EXISTING SURVEY MONUMENTATION SHALL BE MARKED IN THE FIELD PRIOR TO CONSTRUCTION. IF IT IS DAMAGED OR DESTROYED DURING CONSTRUCTION, THEN THE APPLICANT SHALL HIRE A REGISTERED LAND SURVEYOR TO RESET THE MONUMENT AND CERTIFY THE LOCATION.

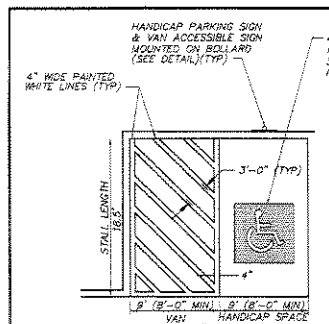

STALL STRIPING

NOT TO SCALE

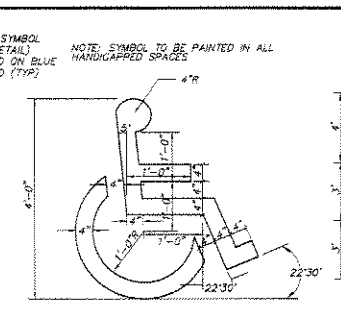

PAINTED HANDICAP SYMBOL

NOT TO SCALE

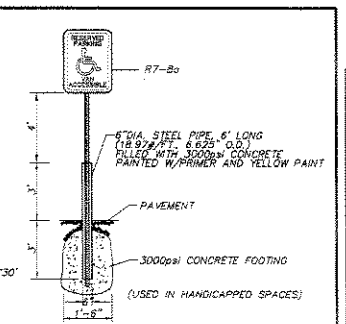

HANDICAP SIGN AND BOLLARD

NOT TO SCALE

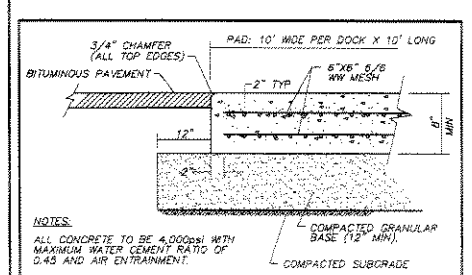

NOTES:
ALL CONCRETE TO BE 4,000psi WITH MAXIMUM WATER CEMENT RATIO OF 0.45 AND AIR ENTRAINMENT.

PAD THICKNESS & DESIGN WILL VARY ACCORDING TO SITE AND SUB-SURFACE CONDITIONS. PAD TO BE DESIGNED BY DEVELOPER'S STRUCTURAL ENGINEER.

DUMPSTER PAD

NOT TO SCALE

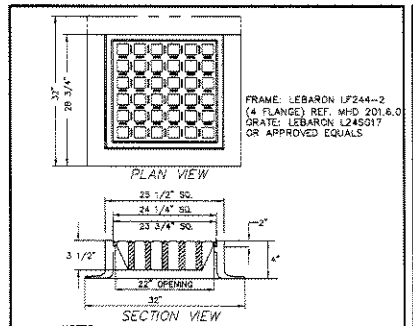

FRAME: LEBARON LF244-2 (4 FLANGE) REF. MHD 201.6.0 GRATE: LEBARON L245017 OR APPROVED EQUALS

NOTES
FULLY MACHINED AND INTERCHANGABLE FRAMES AND COVERS.
HIGH QUALITY MATERIALS AND WORKMANSHIP.
COAL TAR EPOXY PAINTED.
NO ROCK COVERS.
H-20 LOADING RATE
WEIGHT OF GRATE: 215 LBS
WEIGHT OF FRAME: 4 FLANGES - 295 LBS
REFERENCE MHD STANDARD DETAIL 201.6.0

CATCH BASIN FRAME AND GRATE (CB-1-40, CB 42&43, CB 45-48, CB 50-55, CB 57-60)

NOT TO SCALE

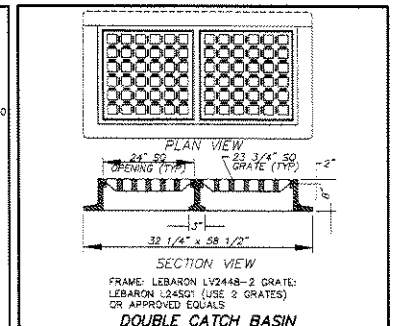

FRAME: LEBARON LV2448-2 GRATE: LEBARON L245G1 (USE 2 GRATES) OR APPROVED EQUALS

DOUBLE CATCH BASIN

NOTES
FULLY MACHINED AND INTERCHANGABLE FRAMES AND COVERS.
HIGH QUALITY MATERIALS AND WORKMANSHIP.
COAL TAR EPOXY PAINTED.
NO ROCK COVERS.
H-20 LOADING RATE
3 FLANGE FRAMES TO BE USED WITH CURB INLET

DOUBLE CATCH BASIN FRAME AND GRATE (CB-41, CB-44, CB-49, & CB-56)

NOT TO SCALE

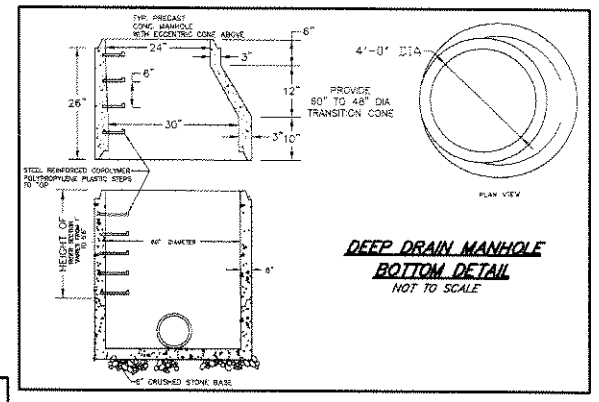

DEEP DRAIN MANHOLE BOTTOM DETAIL

NOT TO SCALE

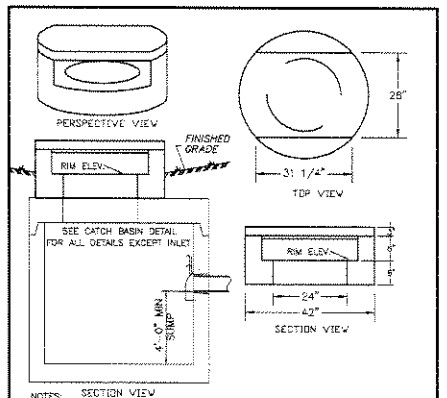

NOTES: SECTION VIEW
1. CONCRETE: 4,000 PSI MINIMUM AFTER 28 DAYS.
2. AS MANUFACTURED BY SHEA CONCRETE OR APPROVED EQUAL.

PRECAST CONCRETE DROP INLET DETAIL (D.I. 1-7)

NOT TO SCALE

I, CLERK OF THE TOWN OF ACTON, MASSACHUSETTS HEREBY CERTIFY THE NOTICE OF APPROVAL OF THIS PLAN BY THE ACTON PLANNING BOARD HAS BEEN RECEIVED AND RECORDED AT THIS OFFICE AND NO APPEAL WAS RECEIVED DURING THE TWENTY DAYS NEXT AFTER SUCH RECEIPT AND RECORDING OF SAID NOTICE.

_____
DATE

_____
TOWN CLERK

THIS PLAN IS SUBJECT TO A SENIOR RESIDENCE SPECIAL PERMIT WITH CONDITIONS AND LIMITATIONS, DATED _____

APPROVED BY:
TOWN OF ACTON
PLANNING BOARD

_____

_____
DATE

THE RESIDENCES AT QUAIL RIDGE
SENIOR RESIDENCE SPECIAL PERMIT
ACTON, MASSACHUSETTS
(MIDDLESEX COUNTY)

DETAILS SHEET

FOR: QUAIL RIDGE COUNTRY CLUB, LLC
SCALE: AS SHOWN JULY 18, 2007

STAMSKI AND McNARY, INC.
80 HARRIS STREET ACTON, MASS.
ENGINEERING - PLANNING - SURVEYING

0 10 20 40 80

(3283B-Details.dwg) Sheet 39 of 43 SM-3283B

COMMONWEALTH OF MASSACHUSETTS WILLIAM F. McNARY No. 30753 PROFESSIONAL LAND SURVEYOR

COMMONWEALTH OF MASSACHUSETTS JOSEPH MARCH CIVIL No. 34677 PROFESSIONAL ENGINEER

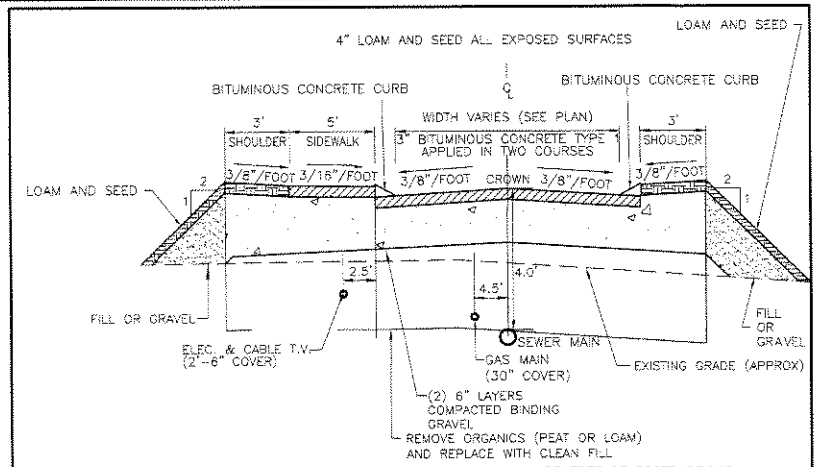

THE 3' WIDE SHOULDER ON EACH SIDE SHALL BE FREE OF OBSTRUCTIONS SUCH AS TRESS OR UTILITY POLES.
THE SHOULDER SHALL BE PREPARED WITH 3"-4" OF TOPSOIL OVER THE SAME GRAVEL BASE AS THE WEAR SURFACE, AND SEEDED.
THE SHOULDER, AND ALL EXPOSED AREAS SHALL BE LOAMED AND SEEDED.

TYPICAL ROAD CROSS-SECTION

NOT TO SCALE

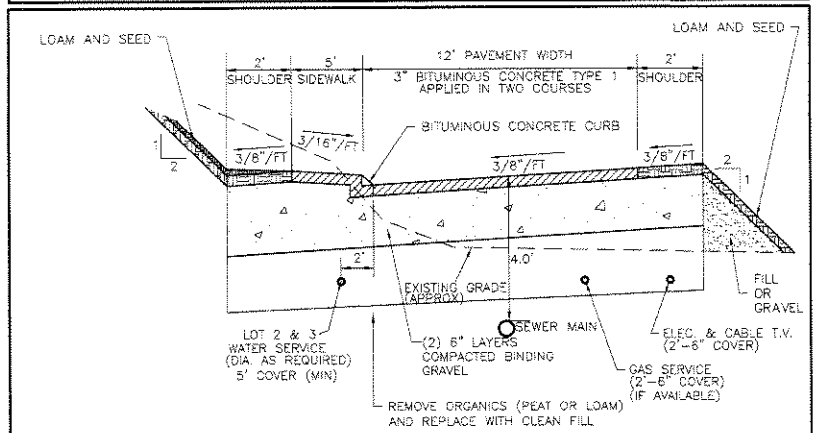

THE 4' WIDE SHOULDER ON EACH SIDE SHALL BE FREE OF OBSTRUCTIONS SUCH AS TREES OR UTILITY POLES.
THE SHOULDER SHALL BE PREPARED WITH 6" OF TOPSOIL OVER THE SAME GRAVEL BASE AS THE WEAR SURFACE, AND SEEDED.
THE SHOULDER, AND ALL EXPOSED AREAS SHALL BE LOAMED AND SEEDED.

COMMON DRIVEWAY CROSS-SECTION

NOT TO SCALE

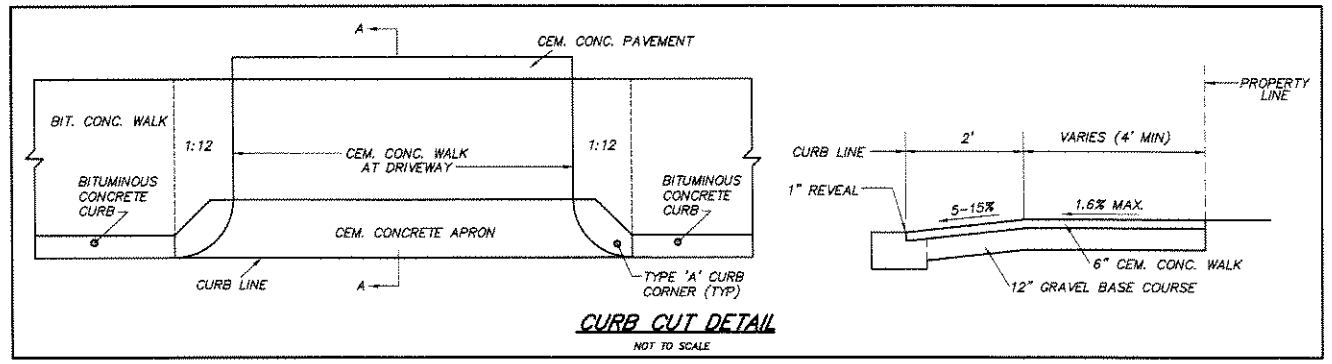

CURB CUT DETAIL

NOT TO SCALE

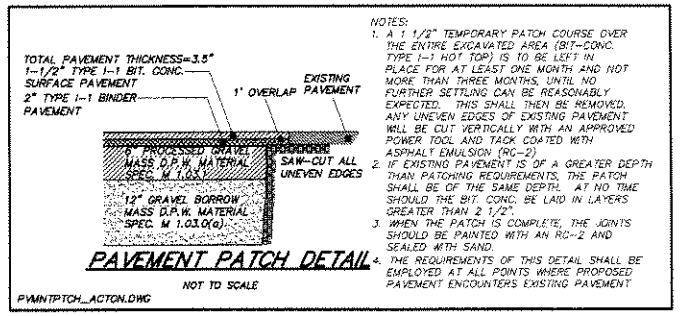

NOTES:
1. A 1 1/2" TEMPORARY PATCH COURSE OVER THE ENTIRE EXCAVATED AREA (BIT-CONC. TYPE I-1 NOT TOP) IS TO BE LEFT IN PLACE FOR AT LEAST ONE MONTH AND NOT MORE THAN THREE MONTHS, UNTIL NO FURTHER SETTLING CAN BE REASONABLY EXPECTED. THIS SHALL THEN BE REMOVED. ANY UNEVEN EDGES OF EXISTING PAVEMENT WILL BE CUT VERTICALLY WITH AN APPROVED POWER TOOL AND TACK COATED WITH ASPHALT EMULSION (RC-2).
2. IF EXISTING PAVEMENT IS OF A GREATER DEPTH THAN PATCHING REQUIREMENTS, THE PATCH SHALL BE OF THE SAME DEPTH. AT NO TIME SHOULD THE BIT. CONC. BE LAID IN LAYERS GREATER THAN 2 1/2".
3. WHEN THE PATCH IS COMPLETE, THE JOINTS SHOULD BE PAINTED WITH AN RC-2 AND SEALED WITH SAND.
4. THE REQUIREMENTS OF THIS DETAIL SHALL BE EMPLOYED AT ALL POINTS WHERE PROPOSED PAVEMENT ENCOUNTERS EXISTING PAVEMENT.

PAVEMENT PATCH DETAIL

NOT TO SCALE

PVMNTPTCH_ACTON.DWG

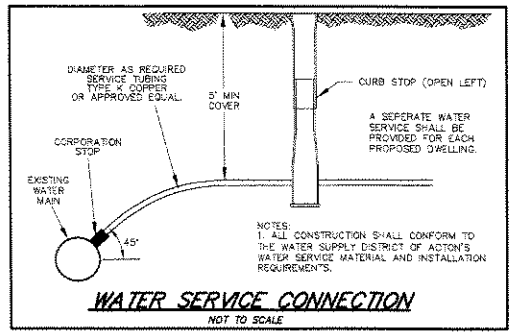

NOTES:
1. ALL CONSTRUCTION SHALL CONFORM TO THE WATER SUPPLY DISTRICT OF ACTON'S WATER SERVICE MATERIAL AND INSTALLATION REQUIREMENTS.

WATER SERVICE CONNECTION

NOT TO SCALE

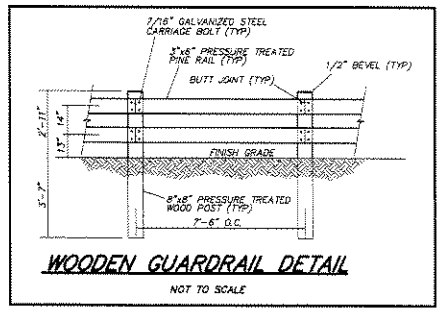

WOODEN GUARDRAIL DETAIL

NOT TO SCALE

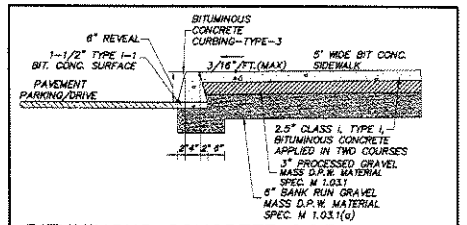

BITUMINOUS CONCRETE SIDEWALK AND BIT. CONC. CURBING TYPE-3 DETAIL

NOT TO SCALE

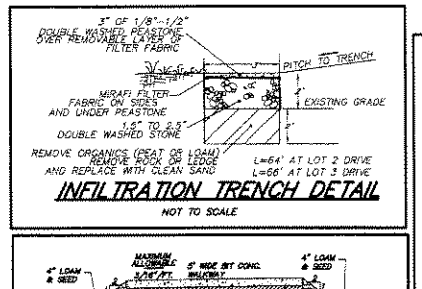

INFILTRATION TRENCH DETAIL

NOT TO SCALE

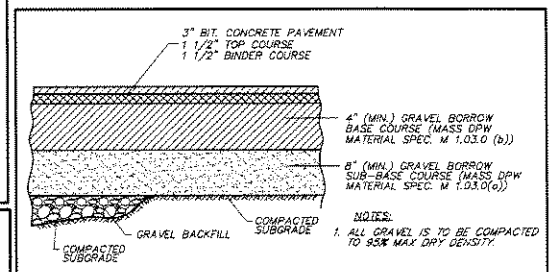

NOTES:
1. ALL GRAVEL IS TO BE COMPACTED TO 95% MAX DRY DENSITY.

STANDARD PAVEMENT DETAIL

NOT TO SCALE

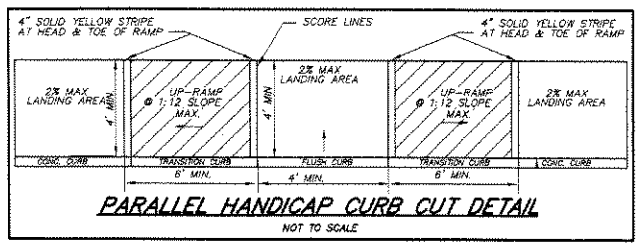

PARALLEL HANDICAP CURB CUT DETAIL

NOT TO SCALE

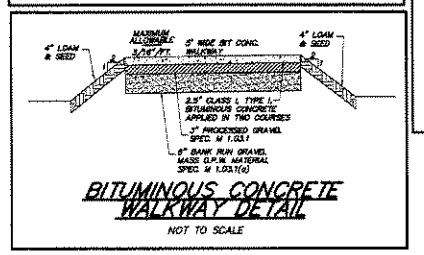

BITUMINOUS CONCRETE WALKWAY DETAIL

NOT TO SCALE

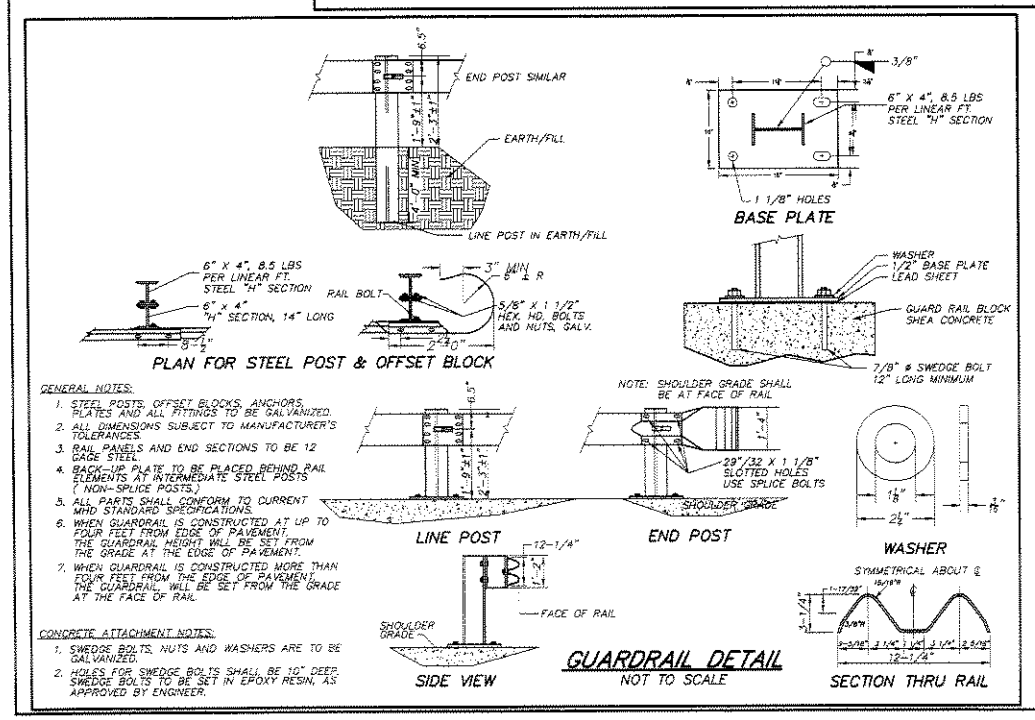

GENERAL NOTES:
1. STEEL POSTS, OFFSET BLOCKS, ANCHORS, PLATES AND ALL FITTINGS TO BE GALVANIZED.
2. ALL DIMENSIONS SUBJECT TO MANUFACTURER'S TOLERANCES.
3. RAIL PANELS AND END SECTIONS TO BE 12 GAGE STEEL.
4. BACK-UP PLATE TO BE PLACED BEHIND RAIL ELEMENTS AT INTERMEDIATE STEEL POSTS (NON-SPLICE POSTS.)
5. ALL PARTS SHALL CONFORM TO CURRENT MHD STANDARD SPECIFICATIONS.
6. WHEN GUARDRAIL IS CONSTRUCTED AT UP TO FOUR FEET FROM EDGE OF PAVEMENT, THE GUARDRAIL HEIGHT WILL BE SET FROM THE GRADE AT THE EDGE OF PAVEMENT.
7. WHEN GUARDRAIL IS CONSTRUCTED MORE THAN FOUR FEET FROM THE EDGE OF PAVEMENT, THE GUARDRAIL WILL BE SET FROM THE GRADE AT THE FACE OF RAIL.

CONCRETE ATTACHMENT NOTES:
1. SWEDGE BOLTS, NUTS AND WASHERS ARE TO BE GALVANIZED.
2. HOLES FOR SWEDGE BOLTS SHALL BE 10" DEEP. SWEDGE BOLTS TO BE SET IN EPOXY RESIN, AS APPROVED BY ENGINEER.

GUARDRAIL DETAIL

NOT TO SCALE

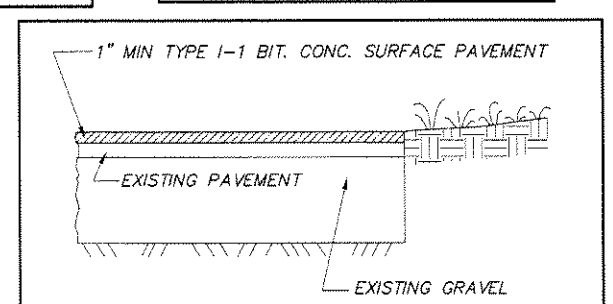

PAVEMENT RESURFACING DETAIL

NOT TO SCALE

I, CLERK OF THE TOWN OF ACTON, MASSACHUSETTS HEREBY CERTIFY THE NOTICE OF APPROVAL OF THIS PLAN BY THE ACTON PLANNING BOARD HAS BEEN RECEIVED AND RECORDED AT THIS OFFICE AND NO APPEAL WAS RECEIVED DURING THE TWENTY DAYS NEXT AFTER SUCH RECEIPT AND RECORDING OF SAID NOTICE.

DATE

TOWN CLERK

THIS PLAN IS SUBJECT TO A SENIOR RESIDENCE SPECIAL PERMIT WITH CONDITIONS AND LIMITATIONS, DATED _____

APPROVED BY:
TOWN OF ACTON
PLANNING BOARD

DATE

THE RESIDENCES AT QUAIL RIDGE
SENIOR RESIDENCE SPECIAL PERMIT

ACTON, MASSACHUSETTS

(MIDDLESEX COUNTY)

DETAILS SHEET

FOR: QUAIL RIDGE COUNTRY CLUB, LLC
SCALE: AS SHOWN JULY 18, 2007

STAMSKI AND McNARY, INC.
80 HARRIS STREET ACTON, MASS.
ENGINEERING - PLANNING - SURVEYING

0 10 20 40 80

(3283B-Details.dwg) Sheet 40 of 43 SM-3283B

COMMONWEALTH OF MASSACHUSETTS WILLIAM E. McNARY No. 30755 PROFESSIONAL LAND SURVEYOR

COMMONWEALTH OF MASSACHUSETTS JOSEPH MARCH CIVIL #40472

I, CLERK OF THE TOWN OF ACTON, MASSACHUSETTS HEREBY CERTIFY THE NOTICE OF APPROVAL OF THIS PLAN BY THE ACTON PLANNING BOARD HAS BEEN RECEIVED AND RECORDED AT THIS OFFICE AND NO APPEAL WAS RECEIVED DURING THE TWENTY DAYS NEXT AFTER SUCH RECEIPT AND RECORDING OF SAID NOTICE.

DATE

TOWN CLERK

THIS PLAN IS SUBJECT TO A SENIOR RESIDENCE SPECIAL PERMIT WITH CONDITIONS AND LIMITATIONS, DATED _____

APPROVED BY:
TOWN OF ACTON
PLANNING BOARD

DATE

DRAINAGE SYSTEM OPERATION AND MAINTENANCE PLAN

THE IMPLEMENTATION, INSPECTION, AND REPAIR OF THE EROSION CONTROLS IS THE RESPONSIBILITY OF THE SITE CONTRACTOR DURING CONSTRUCTION.

THE INSPECTION AND OPERATION OF THE STORM WATER MANAGEMENT SYSTEM UPON COMPLETION OF CONSTRUCTION IS THE RESPONSIBILITY OF THE OWNER.

SITE OWNER:
THE RESIDENCE AT QUAIL RIDGE, LLC.
354B GREAT ROAD
SKYLINE DRIVE
ACTON, MA 01720
(OR ANY FUTURE OWNER)

PARTIES RESPONSIBLE FOR LONG TERM OPERATION/MAINTENANCE:
THE RESIDENCE AT QUAIL RIDGE, HOME OWNERS ASSOCIATION

(OR ANY FUTURE OWNER)

SCHEDULE FOR INSPECTION AND MAINTENANCE:

DEEP SUMP AND HOODED CATCH BASINS

- THE DEEP SUMP FOR THE CATCH BASINS SHALL BE INSPECTED AND CLEANED ANNUALLY. THE CATCH BASINS HAVE A FOUR FOOT DEEP SUMP AND THE WATER LEVEL IS MAINTAINED BY THE DISCHARGE PIPE AT FOUR FEET. THE DISCHARGE PIPE IS HIDDEN FROM VIEW BY A HOODED OUTLET.
  - THE DEPTH OF THE SEDIMENT IN A BASIN SHALL NOT EXCEED A DEPTH OF 18 INCHES AS DETERMINED BY PROBING WITH A STICK. IF THE STICK HITS THE BOTTOM WITHIN 30 INCHES OF THE WATER LEVEL, MORE THAN 18 INCHES OF SEDIMENT HAS ACCUMULATED AND MUST BE REMOVED. LICENSED PERSONS SHOULD REMOVE AND DISPOSE OF THE CONTENTS OF THE SUMP IN ACCORDANCE WITH APPLICABLE REGULATIONS.

SEDIMENT FOREBAY:
THE SEDIMENT FOREBAY SHALL BE INSPECTED AFTER EVERY MAJOR STORM EVENT FOR THE FIRST THREE MONTHS AFTER CONSTRUCTION. THE SEDIMENT FOREBAY SHALL BE INSPECTED TWICE YEARLY THEREAFTER.
SEDIMENT SHALL BE REMOVED FROM THE SEDIMENT FOREBAY UPON DISCOVERY OF 2 INCHES OF SEDIMENT ACCUMULATION.
ERODED OR BARREN SPOTS SHALL BE RECOVERED WITH STONE IMMEDIATELY AFTER INSPECTION TO PREVENT EROSION AND ACCUMULATION OF SEDIMENT.

SEDIMENT SHALL BE REMOVED FROM THE FOREBAY AS NEEDED, AT LEAST ONCE EVERY 10 YEARS. THIS PROCEDURE SHALL NOT TAKE PLACE UNTIL THE FLOOR OF THE FOREBAY IS THOROUGHLY DRY.

DETENTION BASIN/INFILTRATION BASIN/WATER QUALITY SWALE

- THE SEDIMENT FOREBAY SHOULD BE CLEANED OUT ONCE PER YEAR TO THE DEPTHS SPECIFIED ON THE SENIOR RESIDENCE SPECIAL PERMIT PLANS BY STAMSKI AND MCNARY, INC.
- SEDIMENT SHALL BE REMOVED FROM THE DETENTION BASIN BY HAND ONCE EVERY 10 YEARS TO THE DEPTHS SPECIFIED ON THE SENIOR RESIDENCE SPECIAL PERMIT PLANS BY STAMSKI AND MCNARY, INC. DATED
- DURING THE FIRST THREE YEARS AFTER CONSTRUCTION, THE DETENTION BASIN SHALL BE INSPECTED DURING THE GROWING AND NON-GROWING SEASON TWICE PER YEAR. DATA GATHERED DURING THESE INSPECTIONS SHOULD BE RECORDED, MAPPED AND ASSESSED.
  - GRASSES SHALL BE INSPECTED FOR SURVIVAL RATE. ANY BARE AREAS SHALL BE RESEEDED PRIOR TO THE END OF THE GROWING SEASON.
  - THE DETENTION BASINS SHALL BE INSPECTED FOR AREAS OF CONCENTRATED SEDIMENT DEPOSITS. CONCENTRATED SEDIMENT DEPOSITS SHALL BE REMOVED BY HAND.
  - SIDESLOPES OF THE DETENTION BASINS SHALL BE INSPECTED FOR EROSION. ALL ERODED AREAS SHALL RECEIVE 6" OF LOAM AND SEED ACCORDING TO THE SENIOR RESIDENCE SPECIAL PERMIT PLANS BY STAMSKI AND MCNARY, INC.
  - THE DETENTION BASINS OUTLET STRUCTURE SHALL BE INSPECTED FOR OBSTRUCTIONS. ALL OBSTRUCTIONS SHALL BE REMOVED UPON INSPECTION. ALL SEDIMENT THAT HAS ACCUMULATED IN THE STRUCTURE SHALL BE REMOVED BY HAND.

STORMCEPTOR:
INSPECTION AND MAINTENANCE OF THE IN-LINE STORMCEPTOR CAN BE PERFORMED FROM THE SURFACE, WITHOUT ENTRY INTO THE UNIT. PERFORM MAINTENANCE ONCE THE STORED VOLUME REACHES 15% OF THE STORMCEPTOR CAPACITY, OR IMMEDIATELY IN THE EVENT OF A SPILL.

PERFORM QUARTERLY INSPECTIONS DURING THE FIRST YEAR OF INSTALLATION TO ACCURATELY ESTABLISH THE MAINTENANCE SCHEDULE.

REMOVE OIL AND SEDIMENT THROUGH THE 24-INCH DIAMETER OUTLET RISER PIPE. ALTERNATIVELY, FLOATABLES AND HYDROCARBONS MAY BE REMOVED THROUGH THE 6-INCH OIL INSPECTION PORT.

DISPOSAL FROM STORMCEPTOR ARE SIMILAR TO THAT OF ANY OTHER BEST MANAGEMENT PRACTICE (BMP). CONSULT LOCAL GUIDELINES OR YOUR STORMCEPTOR AREA MARKETING MANAGER PRIOR TO DISPOSING THE SEPARATOR CONTENTS.

EMERGENCY CONTACTS:
IN THE EVENT OF A HAZARDOUS MATERIALS SPILL ON THE SITE THE FOLLOWING PARTIES SHALL BE CONTACTED:

FIRE DEPARTMENT: PH: 978-264-9645

THE RESIDENCE AT QUAIL RIDGE, LLC.

RECORDS:

- THE OWNER SHALL MAINTAIN AN INSPECTION LOG OF ALL ELEMENTS OF THE STORM WATER MANAGEMENT PLAN. THE OWNER SHALL MAINTAIN A MAINTENANCE LOG DOCUMENTING THE INSPECTION AND MAINTENANCE OF THE DRAINAGE STRUCTURES UNDER HIS CONTROL. A COPY OF THE EROSION CONTROL AND STORM WATER MAINTENANCE PLAN AND INSPECTION LOGS SHALL BE KEPT ONSITE AT ALL TIMES.

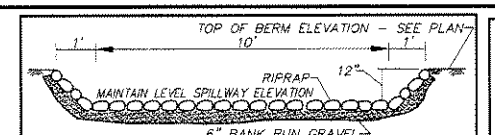

BASIN #	SPILLWAY (ELEV.)
9	234.0
10	224.0
11	220.0
12	225.0
13	187.1
15	199.2
16	224.5

BASIN #	SPILLWAY (ELEV.)
17	207.0
20	166.3
21	158.1
27	226.0
29	224.5
31	219.6

EMERGENCY SPILLWAY DETAIL

NOT TO SCALE

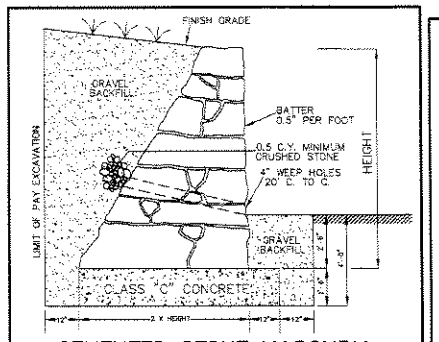

CEMENTED STONE MASONRY RETAINING WALL

NOT TO SCALE

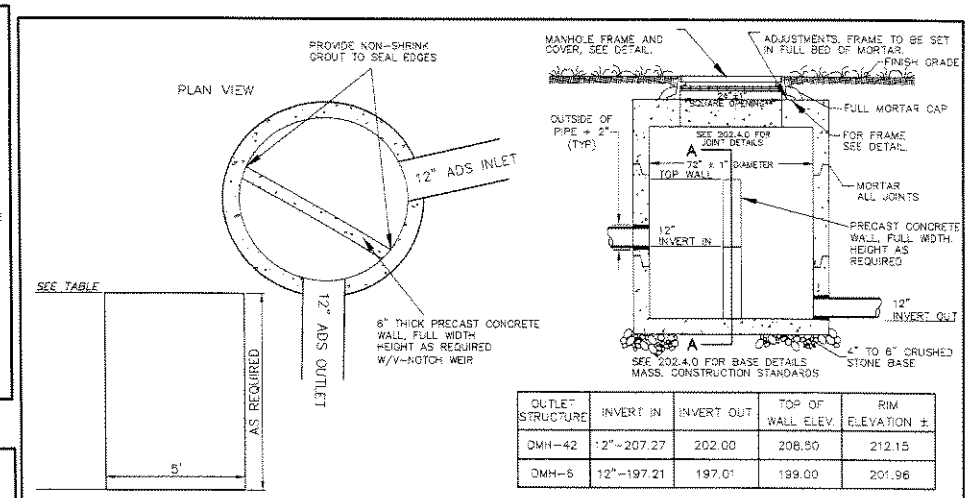

OUTLET STRUCTURE	INVERT IN	INVERT OUT	TOP OF WALL ELEV.	RIM ELEVATION ±
DMH-42	12"-207.27	202.00	208.50	212.15
DMH-6	12"-197.21	197.01	199.00	201.96

DIVERSION MANHOLE STRUCTURE

NOT TO SCALE

NOTE: SEE PRECAST CONCRETE MANHOLE DETAIL FOR MANHOLE SPECIFICATIONS.

REINFORCED CONCRETE PIPE FLARED ENDS

NOT TO SCALE

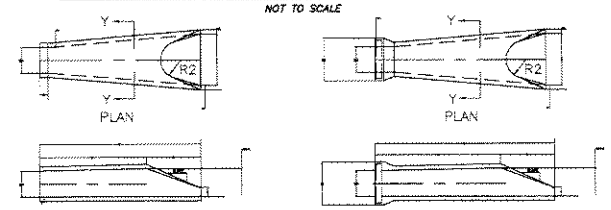

DIA	W	A	B	C	D	E	BD	K	L	P	DIA+1"	R1	R2	G	SLOPE
12	2"	4"	2'-0"	4'-7/8"	6'-1 3/8"	2'-0"	20"	4'-6 1/8"	6'-6 1/8"	19 15/16"	13"	10 1/8"	9"	2 1/2"	3:1
15	2 1/4"	5"	2'-3"	3'-10"	6'-1 1/2"	2'-6"	24"	4'-3 11/16"	6'-6 11/16"	24 5/16"	16"	12 1/2"	11"	2 1/2"	3:1
18	2 1/2"	9"	2'-3"	3'-10"	6'-1"	3'-0"	28"	4'-3 7/8"	6'-6 7/8"	29"	19"	15 1/2"	12"	2 3/4"	3:1
21	2 3/4"	9"	2'-11"	3'-2"	6'-1"	3'-6"	32"	3'-8 5/16"	6'-7 5/16"	31 5/8"	22"	16 1/8"	13"	2 3/4"	3:1
24	3"	9.5"	3'-7.5"	2'-6"	6'-1"	4'-0"	36"	3'-1/2"	6'-8"	33 3/16"	25"	16 13/16"	14"	3"	3:1

FOR BELL AND SPIGET PIPE

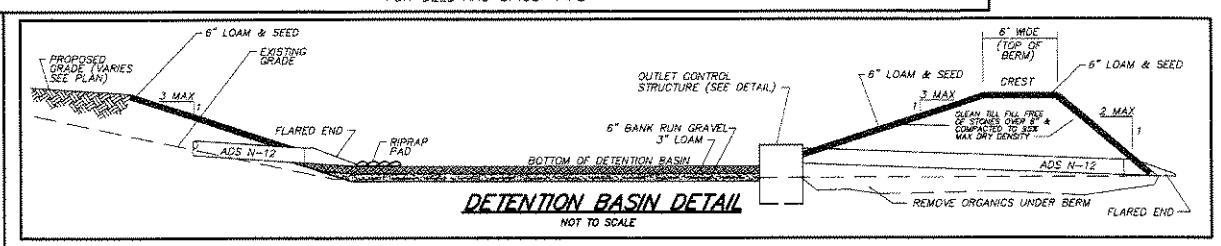

DETENTION BASIN DETAIL

NOT TO SCALE

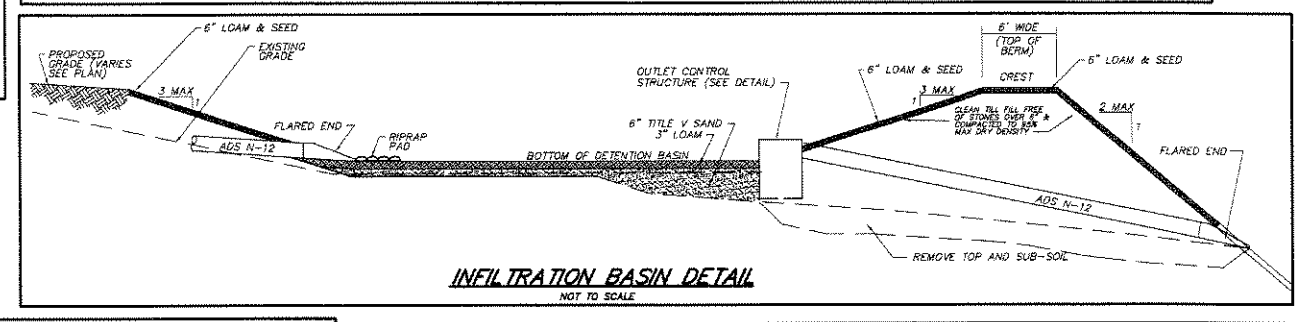

INFILTRATION BASIN DETAIL

NOT TO SCALE

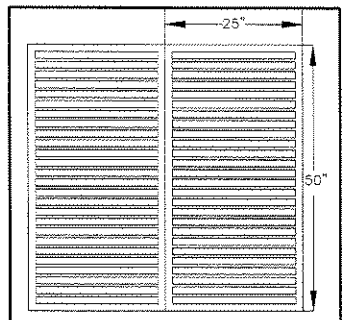

R-4977-4 TYPE "B"
CAST IRON AREAWAY GRATINGS
NEENAH FOUNDRY CO. OR
APPROVED EQUAL. (2 REQUIRED)

OUTLET GRATE DETAIL

NOT TO SCALE

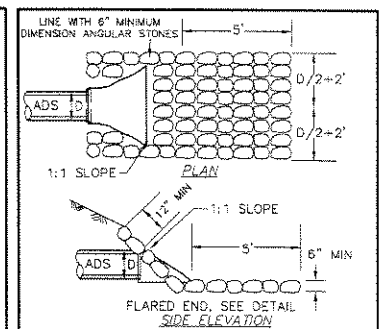

INLET F.E.S.

F.E.S. #	INV. (ELEV.)
9-A	231.10
10-A	221.86
11-A	216.13
12-A	220.65
13-A	183.62
15-A 15-B	193.53 194.96
16-A	222.99
17-A	216.18
20	NO F.E.S.
21	NO F.E.S.
22-A 22-B 22-C	206.01 204.93 206.50
27-A	223.22
28-A 29-B	221.00 224.97

OUTLET F.E.S.

F.E.S. #	INV. (ELEV.)
9-B	229.65
10-B	219.55
11-B	214.75
12-B	220.70
13-B	182.75
15-C	193.66
16-B	207.10
17-B	201.87
20	163.12
21	154.89
22	192.59
27-B	218.57
29-C	221.85

FLARED END SECTION DETAIL

NOT TO SCALE

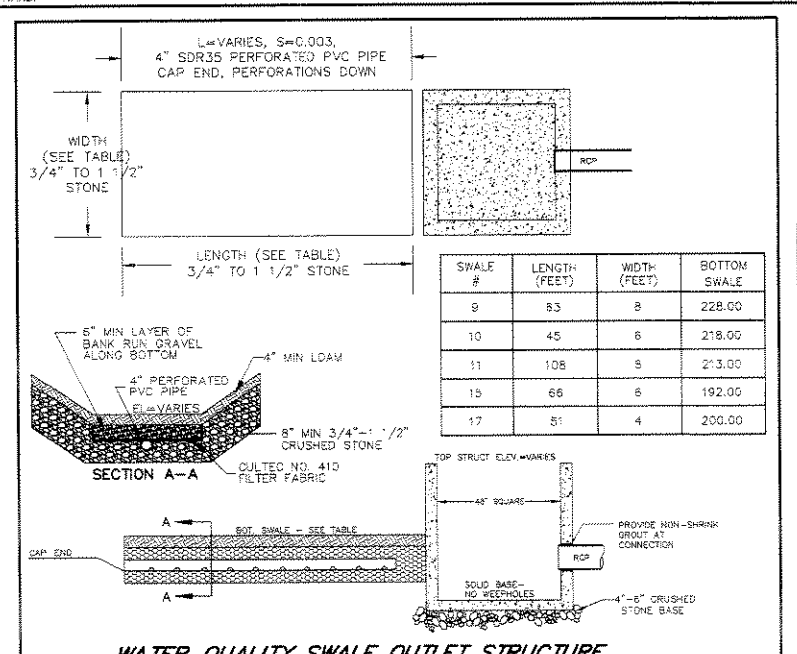

SWALE #	LENGTH (FEET)	WIDTH (FEET)	BOTTOM SWALE
9	83	8	228.00
10	45	6	218.00
11	108	5	213.00
15	66	6	192.00
17	51	4	200.00

WATER QUALITY SWALE OUTLET STRUCTURE

NOT TO SCALE

NOTES
1. MANHOLE 4' x 4' SQUARE (SHEA CONCRETE OR APPROVED EQUAL) TO CONFORM TO MASS. D.P.W. STANDARD 202.4.0.
2. FACE OF PIPE FLUSH OR NOT TO PROJECT MORE THAN 4" FROM FACE OF WALL ALONG CENTERLINE OF PIPE

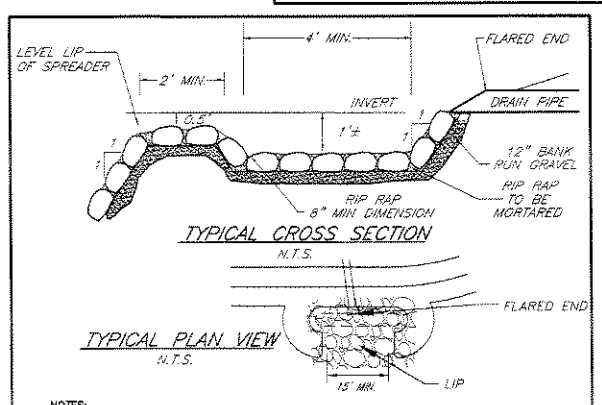

NOTES:
RIP RAP SHALL BE HARD DURABLE STONE, ANGULAR IN SHAPE AND BE GENERALLY WELL GRADED WITHIN A 45 LB. TO 125 LB. RANGE. RIP RAP SHALL BE PLACED OVER A 1' COARSE BANK RUN GRAVEL MATTE.

LEVEL SPREADER DETAIL

NOT TO SCALE

ELEVATION TABLE

OUTLET STRUCTURE	A (ELEV.)	B (ELEV.)	C (ELEV.)	D (ANGLE°)
9	230.00	234.00	230.00	5'
10	220.00	224.00	220.00	5'
11	215.00	220.00	215.00	5'
12	221.00	225.00	221.50	5'
13	183.00	187.00	183.00	5'
15	194.00	199.00	194.00	5'
16	219.00	224.00	222.00	10'
17	202.00	207.00	202.00	5'
20	163.50	166.00	NO V-NOTCH	NO V-NOTCH
21	155.00	157.80	155.00	5'
22	202.00	207.50	204.00	30'
27	223.00	226.00	224.00	35'
29	222.00	224.25	223.0	5'

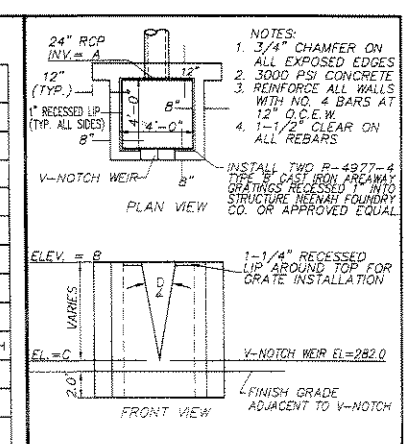

OUTLET STRUCTURE DETAIL

NOT TO SCALE

THE RESIDENCES AT QUAIL RIDGE
SENIOR RESIDENCE SPECIAL PERMIT
ACTON, MASSACHUSETTS
(MIDDLESEX COUNTY)

DETAILS SHEET

FOR: QUAIL RIDGE COUNTRY CLUB, LLC
SCALE: AS SHOWN JULY 18, 2007

STAMSKI AND McNARY, INC.
80 HARRIS STREET ACTON, MASS.
ENGINEERING - PLANNING - SURVEYING
0 10 20 40 80

(3283B-Details.dwg) Sheet 41 of 43 SM-3283B

COMMONWEALTH OF MASSACHUSETTS WILLIAM F. McNARY No. 30753 PROFESSIONAL ENGINEER

COMMONWEALTH OF MASSACHUSETTS JOSEPH MARCH CIVIL #40476 PROFESSIONAL ENGINEER

Rinker MATERIALS™ — Concrete Pipe Division

STC 2400 Precast Concrete Stormceptor®
(2400 U.S. Gallon Capacity)

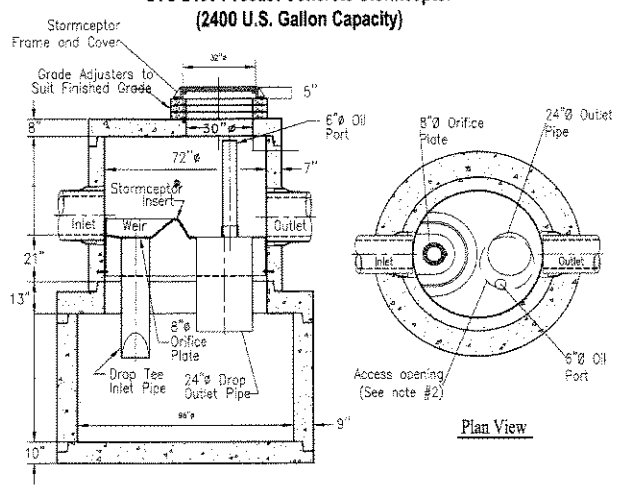

STORMCEPTOR DETAIL
NOT TO SCALE

Notes:
1. The Use Of Flexible Connection is Recommended at The Inlet and Outlet Where Applicable.
2. The Cover Should be Positioned Over The Outlet Drop Pipe and The Oil Port.
3. The Stormceptor System is protected by one or more of the following U.S. Patents: #4985148, #5498331, #5725760, #5753115, #5849181, #6068765, #6371690.
4. Contact a Concrete Pipe Division representative for further details not listed on this drawing.

Rinker 031

SUBSURFACE RECHARGE AREA SCHEDULE

INLET FROM	INLET INVERT	BOTTOM STONE	CULTEC LENGTH
DMH-42	204.50	204.00	22.5'
DMH-17	214.49	213.99	45.0'

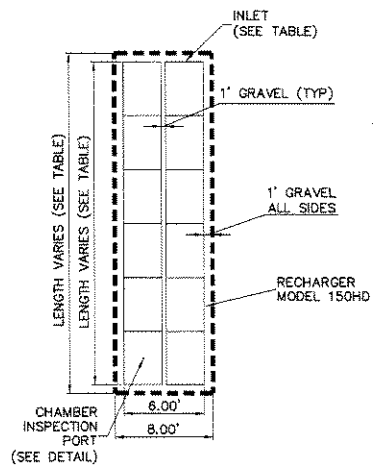

SUBSURFACE RECHARGE AREA DETAIL
NOT TO SCALE

SUBSURFACE RECHARGE AREA SCHEDULE

INLET FROM	INLET INVERT	BOTTOM STONE	CULTEC LENGTH
DMH-6	195.96	195.46	15.0'
DMH-8	184.46	183.96	15.0'
DMH-9	184.46	183.96	15.0'
CB-54 (3 UNIT)	228.50	228.00	24.5'

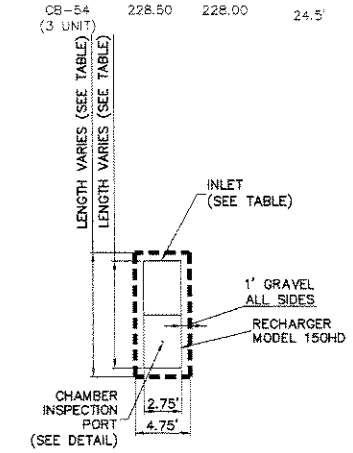

SUBSURFACE RECHARGE AREA DETAIL
NOT TO SCALE

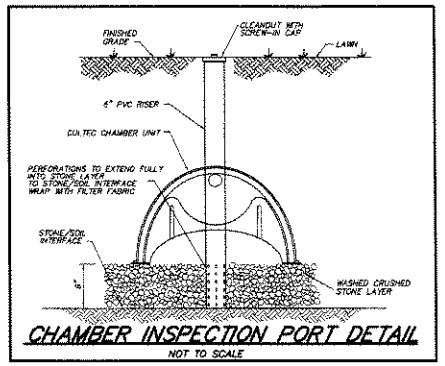

CHAMBER INSPECTION PORT DETAIL
NOT TO SCALE

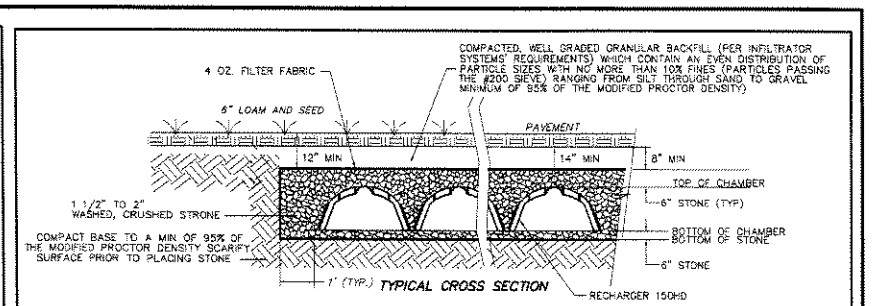

TYPICAL SUBSURFACE RECHARGE AREA DETAIL

CULTEC RECHARGER 150HD HEAVY DUTY
NOT TO SCALE

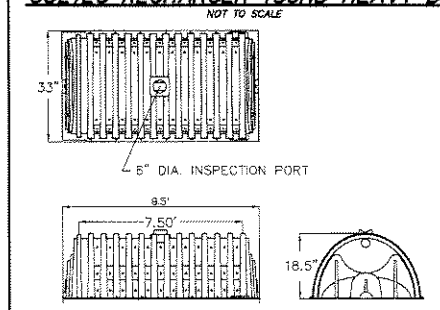

ALL RECHARGER 150HD HEAVY-DUTY UNITS ARE MARKED WITH A COLOR STRIPE FORMED INTO THE PART ALONG THE LENGTH OF THE CHAMBER.

CULTEC CONTACTOR 100HD HEAVY DUTY

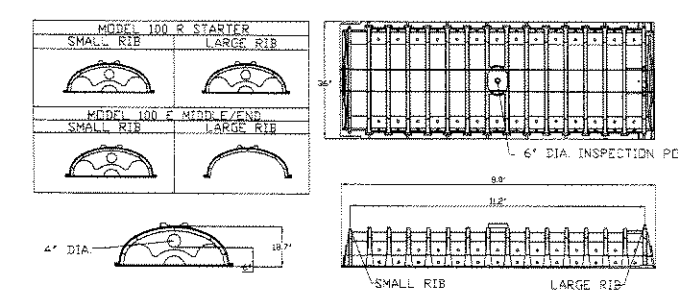

SUBSURFACE RECHARGE AREA DETAIL
NOT TO SCALE

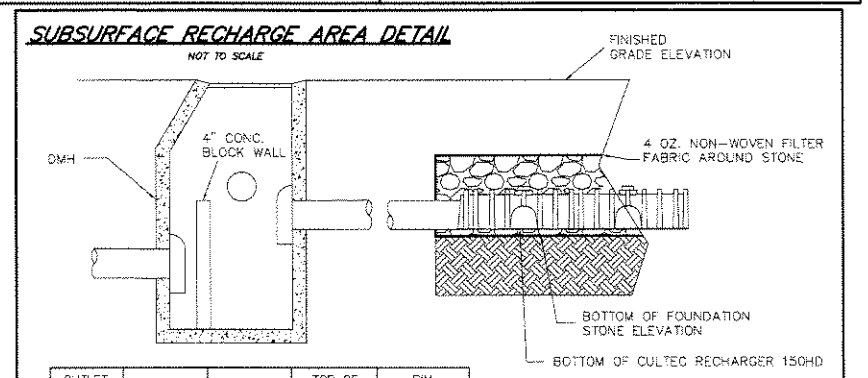

OUTLET STRUCTURE	INVERT IN	INVERT OUT	TOP OF WALL ELEV.	RIM ELEVATION ±
CB-8	GRATE-(RIM)	185.62	187.50	189.62
CB-9	GRATE-(RIM)	185.62	187.50	189.62
CB-54	GRATE-(RIM)	228.60	230.54	232.60

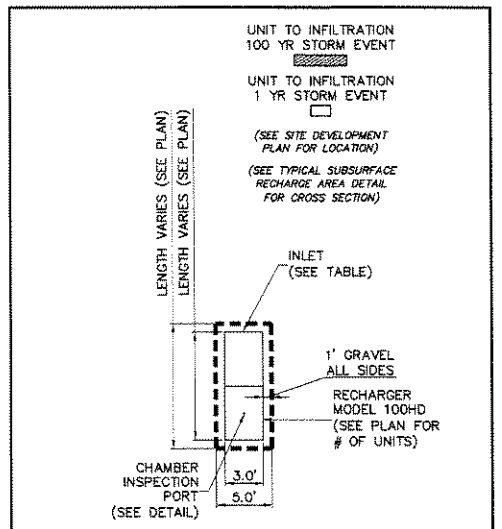

ROOFDRAIN DRYWELL DETAIL
NOT TO SCALE

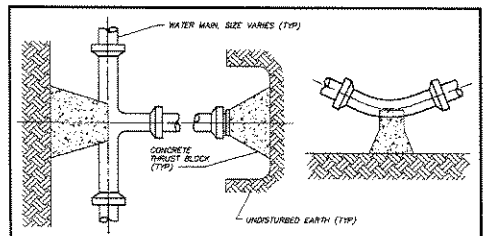

TYPICAL THRUST BLOCK DETAIL
NOT TO SCALE

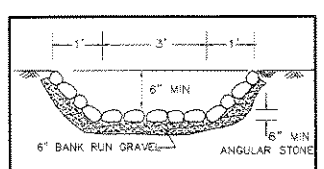

RIP RAP CHANNEL DETAIL
NOT TO SCALE

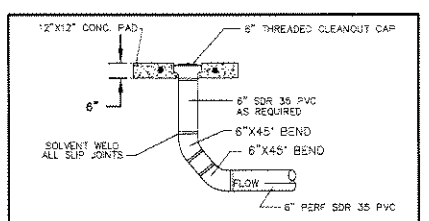

SUBDRAIN CLEANOUT DETAIL
NOT TO SCALE

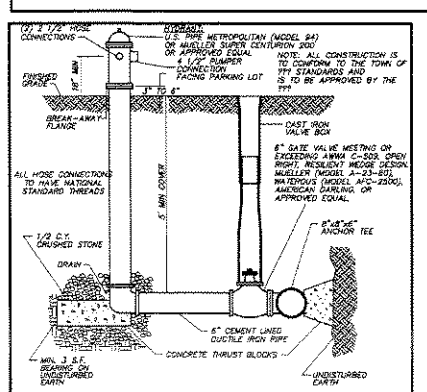

FIRE HYDRANT DETAIL
NOT TO SCALE

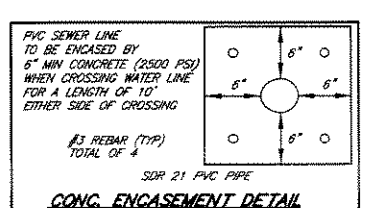

CONC. ENCASEMENT DETAIL
NOT TO SCALE

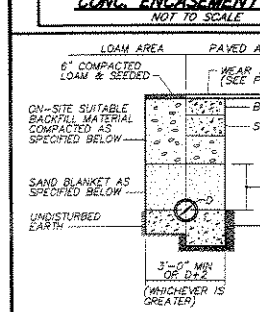

NOTES:
1. CRUSHED STONE BEDDING AS SPECIFIED BELOW FOR FULL WIDTH OF THE TRENCH UP TO SPRINGLINE OF PIPE. 6" BELOW PIPE IN EARTH AND 12" BELOW PIPE IN ROCK
2. BACKFILL MATERIAL BELOW PAVED OR CONCRETE AREAS, BEDDING MATERIAL, AND SAND BLANKET SHALL BE COMPACTED TO NOT LESS THAN 95% OF AASHTO T 99, METHOD C. SUITABLE BACKFILL MATERIAL BELOW LOAM AREAS SHALL BE COMPACTED TO NOT LESS THAN 90%

SAND BLANKET & BEDDING

SIEVE SIZE	% FINER BY WEIGHT
1/2"	90 - 100
200	0 - 15

3/4" CRUSHED STONE BEDDING

SIEVE SIZE	% FINER BY WEIGHT
1"	
3/4"	90 - 100
1/2"	20 - 50
3/8"	0 - 20
# 4	0 - 5

UTILITY TRENCH
NOT TO SCALE

I, CLERK OF THE TOWN OF ACTON, MASSACHUSETTS HEREBY CERTIFY THE NOTICE OF APPROVAL OF THIS PLAN BY THE ACTON PLANNING BOARD HAS BEEN RECEIVED AND RECORDED AT THIS OFFICE AND NO APPEAL WAS RECEIVED DURING THE TWENTY DAYS NEXT AFTER SUCH RECEIPT AND RECORDING OF SAID NOTICE.

DATE

TOWN CLERK

THIS PLAN IS SUBJECT TO A SENIOR RESIDENCE SPECIAL PERMIT WITH CONDITIONS AND LIMITATIONS, DATED _____

APPROVED BY:
TOWN OF ACTON
PLANNING BOARD

DATE

THE RESIDENCES AT QUAIL RIDGE
SENIOR RESIDENCE SPECIAL PERMIT
ACTON, MASSACHUSETTS
(MIDDLESEX COUNTY)

DETAILS SHEET

FOR: QUAIL RIDGE COUNTRY CLUB, LLC
SCALE: AS SHOWN JULY 18, 2007

STAMSKI AND McNARY, INC.
80 HARRIS STREET ACTON, MASS.
ENGINEERING - PLANNING - SURVEYING

0 10 20 40 80

(3283B-Details.dwg) Sheet 42 of 43 SM-3283B

COMMONWEALTH OF MASSACHUSETTS WILLIAM F. McNARY No. 30753 PROFESSIONAL LAND SURVEYOR

COMMONWEALTH OF MASSACHUSETTS JOSEPH MARCH CIVIL No. 34047 PROFESSIONAL ENGINEER

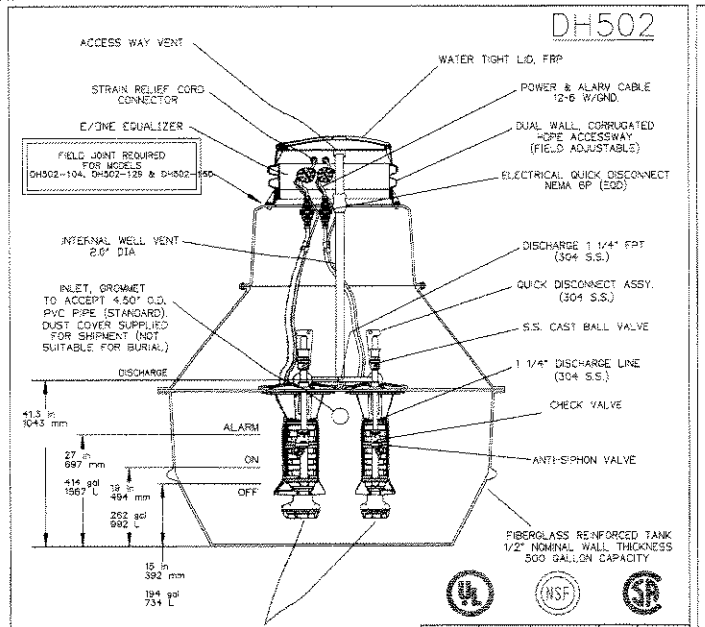

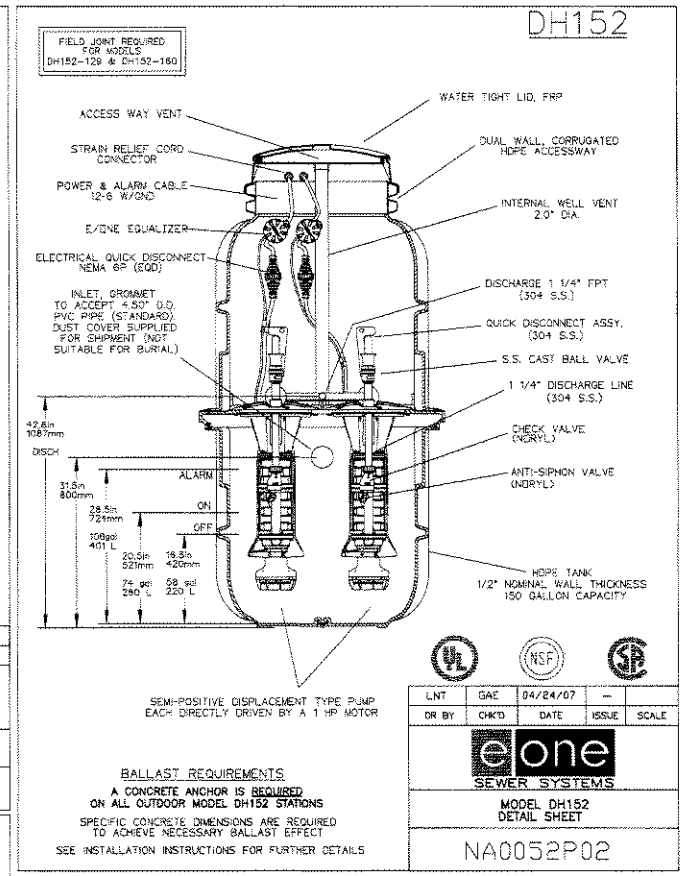

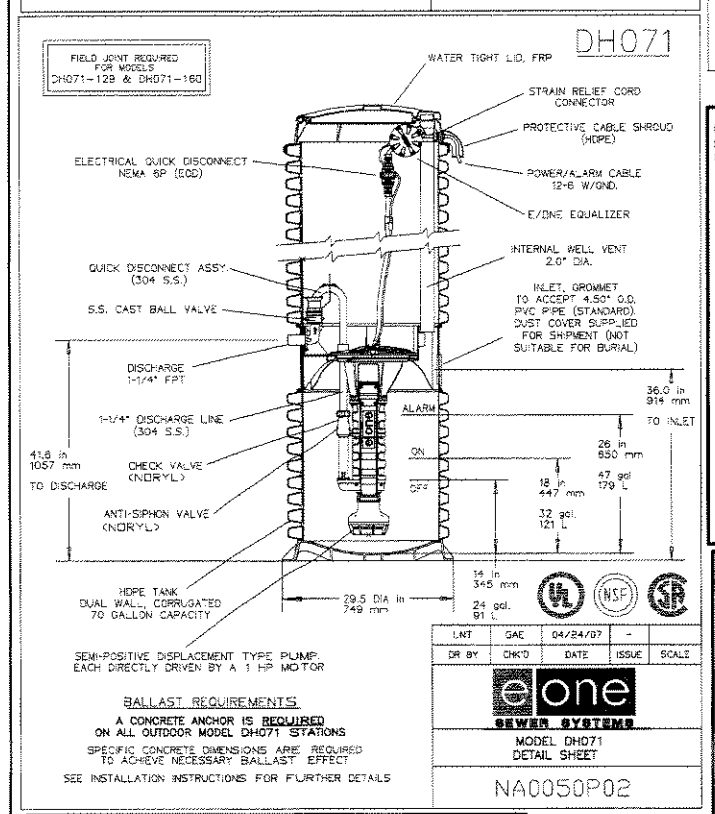

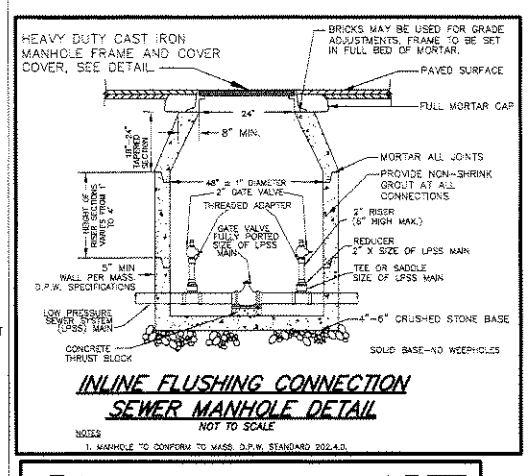

INLINE FLUSHING CONNECTION
SEWER MANHOLE DETAIL
NOT TO SCALE

NOTES
1. MANHOLE TO CONFORM TO MASS. D.P.W. STANDARD 202.4.0.

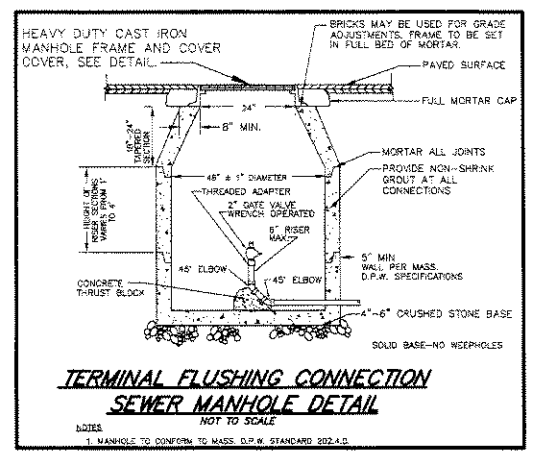

TERMINAL FLUSHING CONNECTION
SEWER MANHOLE DETAIL
NOT TO SCALE

NOTES
1. MANHOLE TO CONFORM TO MASS. D.P.W. STANDARD 202.4.0.

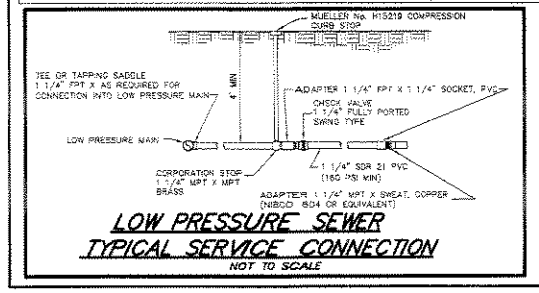

LOW PRESSURE SEWER
TYPICAL SERVICE CONNECTION
NOT TO SCALE

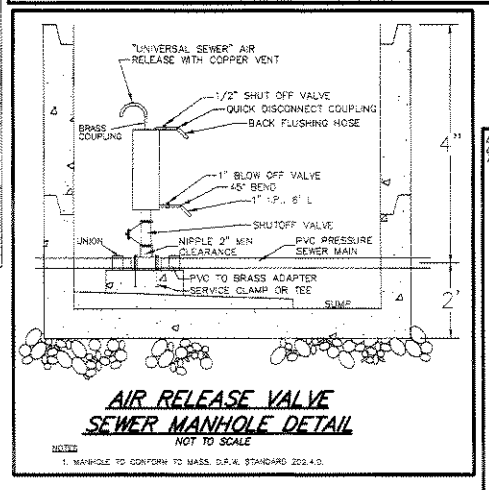

AIR RELEASE VALVE
SEWER MANHOLE DETAIL
NOT TO SCALE

NOTES
1. MANHOLE TO CONFORM TO MASS. D.P.W. STANDARD 202.4.0.

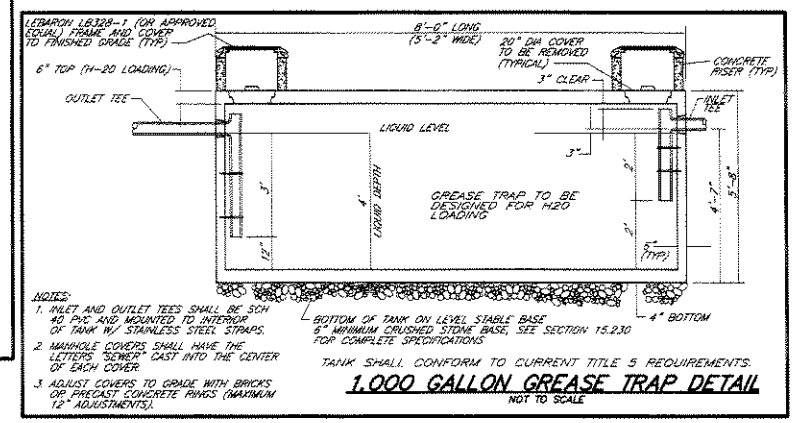

NOTES:
1. INLET AND OUTLET TEES SHALL BE SCH 40 PVC AND MOUNTED TO INTERIOR OF TANK W/ STAINLESS STEEL STRAPS.
2. MANHOLE COVERS SHALL HAVE THE LETTERS "SEWER" CAST INTO THE CENTER OF EACH COVER.
3. ADJUST COVERS TO GRADE WITH BRICKS OR PRECAST CONCRETE RINGS (MAXIMUM 12" ADJUSTMENTS).

BOTTOM OF TANK ON LEVEL STABLE BASE 6" MINIMUM CRUSHED STONE BASE, SEE SECTION 15.230 FOR COMPLETE SPECIFICATIONS

TANK SHALL CONFORM TO CURRENT TITLE 5 REQUIREMENTS.

1,000 GALLON GREASE TRAP DETAIL
NOT TO SCALE

I, CLERK OF THE TOWN OF ACTON, MASSACHUSETTS HEREBY CERTIFY THE NOTICE OF APPROVAL OF THIS PLAN BY THE ACTON PLANNING BOARD HAS BEEN RECEIVED AND RECORDED AT THIS OFFICE AND NO APPEAL WAS RECEIVED DURING THE TWENTY DAYS NEXT AFTER SUCH RECEIPT AND RECORDING OF SAID NOTICE.

DATE

TOWN CLERK

THIS PLAN IS SUBJECT TO A SENIOR RESIDENCE SPECIAL PERMIT WITH CONDITIONS AND LIMITATIONS, DATED _____

APPROVED BY:
TOWN OF ACTON
PLANNING BOARD

DATE

THE RESIDENCES AT QUAIL RIDGE
SENIOR RESIDENCE SPECIAL PERMIT
ACTON, MASSACHUSETTS
(MIDDLESEX COUNTY)

DETAILS SHEET

FOR: QUAIL RIDGE COUNTRY CLUB, LLC
SCALE: AS SHOWN JULY 18, 2007

STAMSKI AND McNARY, INC.
80 HARRIS STREET ACTON, MASS.
ENGINEERING - PLANNING - SURVEYING
0 10 20 40 80

(3283B-Details.dwg) Sheet 43 of 43 SM-3283B

COMMONWEALTH OF MASSACHUSETTS WILLIAM F. McNARY No. 30753 PROFESSIONAL LAND SURVEYOR

COMMONWEALTH OF MASSACHUSETTS JOSEPH MARCH CIVIL #40474 REGISTERED PROFESSIONAL ENGINEER