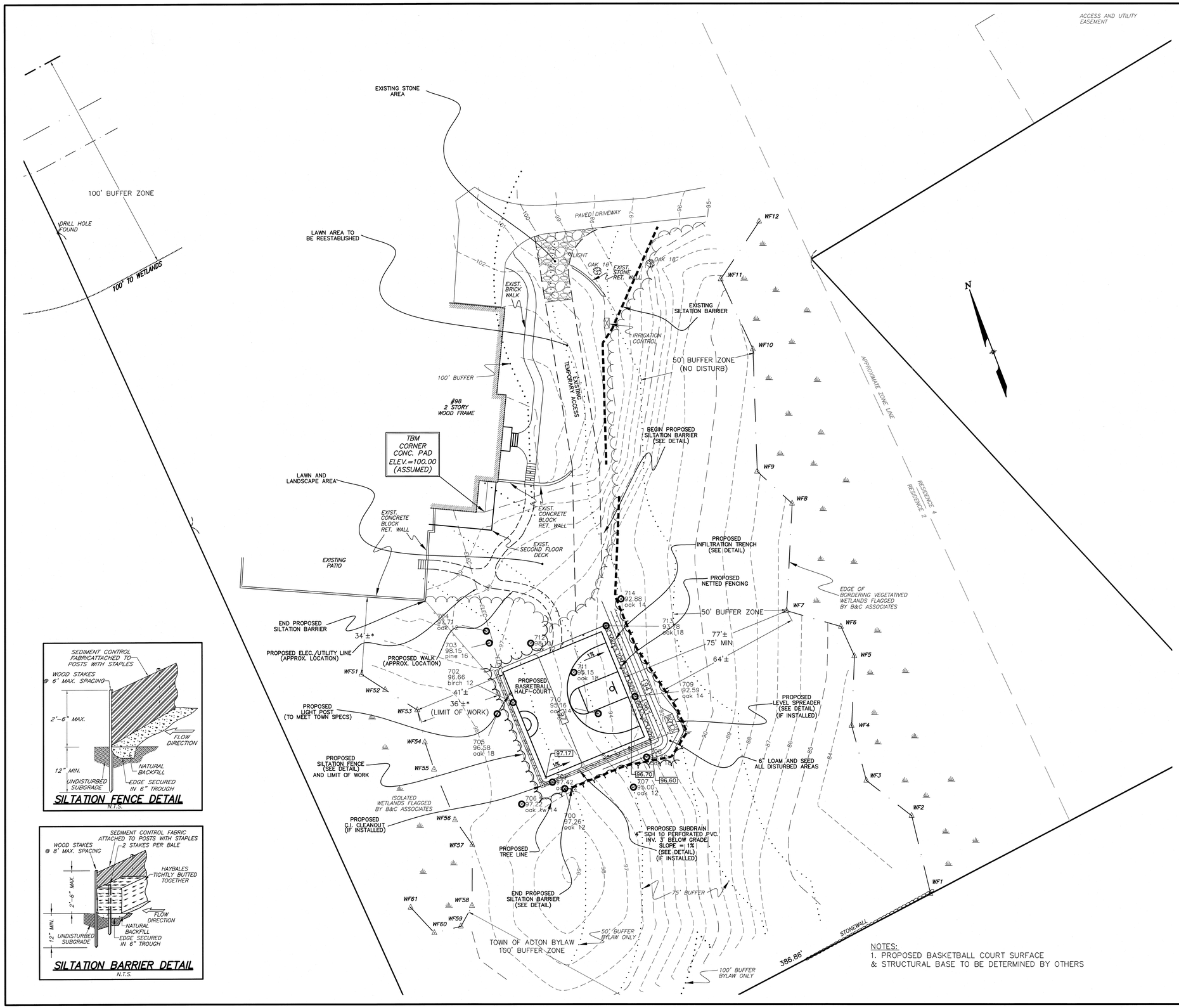

NOTES:
1. PROPOSED BASKETBALL COURT SURFACE & STRUCTURAL BASE TO BE DETERMINED BY OTHERS

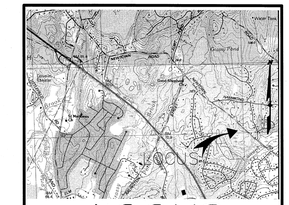

LOCUS:
NTS

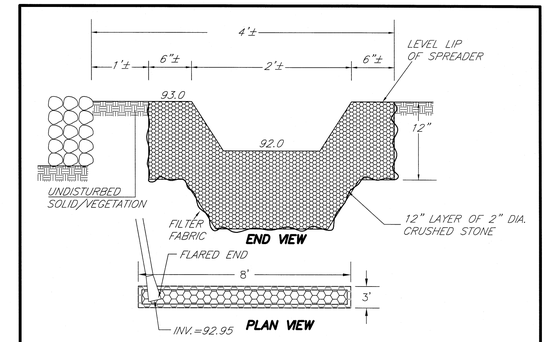

LEVEL SPREADER DETAIL
NOT TO SCALE

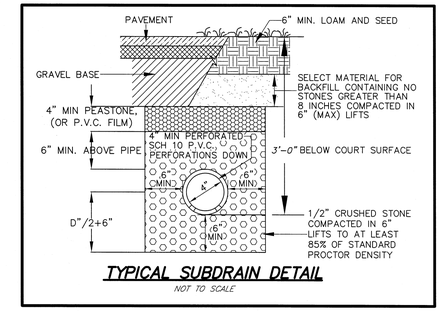

TYPICAL SUBDRAIN DETAIL
NOT TO SCALE

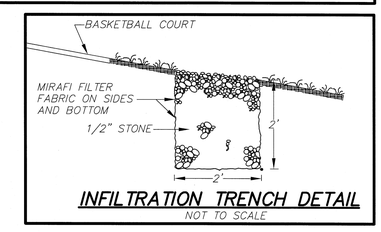

INFILTRATION TRENCH DETAIL
NOT TO SCALE

SILTATION FENCE DETAIL
N.T.S.

SILTATION BARRIER DETAIL
N.T.S.

WETLAND PERMIT PLAN
IN
ACTON, MASSACHUSETTS
(MIDDLESEX COUNTY)

FOR: J.F. BASNETT CO., INC.
SCALE: 1"=20' SEPTEMBER 17, 2007
REVISED: OCTOBER 10, 2007
REVISED: OCTOBER 31, 2007

STAMSKI AND MCNARY, INC.
80 HARRIS STREET ACTON, MASSACHUSETTS
ENGINEERING – PLANNING – SURVEYING

0 10 20 40 60 80 FT

(4020A-WP-5.dwg) 98 NEWTOWN ROAD SM-4020A