NOTES:

1. ALL UNDERGROUND UTILITIES SHOWN HERE WERE COMPILED ACCORDING TO AVAILABLE RECORD PLANS FROM VARIOUS UTILITY COMPANIES AND PUBLIC AGENCIES AND ARE APPROXIMATE ONLY. ACTUAL LOCATIONS MUST BE DETERMINED BEFORE DESIGNING, EXCAVATING, BLASTING, INSTALLING, BACKFILLING, GRADING, OR PAVEMENT RESTORATION OR REPAIR. ALL UTILITY COMPANIES, PUBLIC AND PRIVATE, MUST BE CONTACTED, INCLUDING THOSE IN CONTROL OF UTILITIES SEE CHAPTER 370, ACTS OF 1963 MASS. WE ASSUME NO RESPONSIBILITY FOR DAMAGES INCURRED AS A RESULT OF UTILITIES OMITTED OR INACCURATELY SHOWN. BEFORE PLANNING FUTURE CONNECTIONS, THE APPROPRIATE UTILITY ENGINEERING DEPARTMENT MUST BE CONSULTED. DIG SAFE TELEPHONE NO.: 1-800-344-7233
2. LOCATIONS OF THE EXISTING SEPTIC TANKS, SEPTIC COMPONENTS, AND WATER LINE ARE APPROXIMATE PER ACTON B.O.H. RECORDS, AND ACTON TOWN ENGINEER RECORDS.
3. THE CONTRACTOR SHALL CONFIRM THE EXISTING BUILDING SEWER INVERTS PRIOR TO CONSTRUCTION AND REPORT ANY DEVIATIONS BACK TO THE DESIGN ENGINEER.
4. EXISTING SEPTIC TANK SHALL BE PUMPED DRY, ITS BOTTOM RUPTURED AND BACKFILLED WITH TITLE 5 APPROVED SAND IN ACCORDANCE WITH TITLE V, SECTION 15.354, "ABANDONMENT OF SYSTEMS" OR REMOVED OFFSITE. THE EXISTING SOIL ABSORBTION SYSTEM MAY BE ABANDONED IN PLACE OR EXCAVATED AND REMOVED OFFSITE.
5. ALL PROPOSED GRAVITY SEWER LINES SHALL BE 6" SDR 35 PVC PIPE OR 4" SCH 40 PVC (WITHIN 10' OF BUILDINGS) CONFORMING TO ASTM D3034, FORCE MAIN PIPING SHALL BE 1-1/2" SDR 21 PVC PIPE CONFORMING TO ASTM D2241 AND D1784, MIN. SLOPES ON ALL COLLECTING SEWER LINES SHALL BE 2%
6. PIPE LENGTHS ARE MEASURED FROM THE INTERIOR WALLS OF THE SANITARY SEWER MANHOLES.
7. THERE SHALL BE A 10' HORIZONTAL SEPARATION BETWEEN THE PROPOSED SEWER LINE AND ANY EXISTING WATER LINES. WHERE THIS SEPARATION CANNOT BE MET, THE SEWER LINE SHALL BE ENCASED IN 12" OF CONCRETE FOR 10' ON EITHER SIDE OF THE SEWER/WATER CROSSING, REFER TO DETAIL.
8. PIPE BEDDING SHALL CONSIST OF SCREENED GRAVEL AND/OR CRUSHED STONE FREE FROM CLAY, LOAM, ORGANIC MATTER AND MEETING ASTM C33.
9. SEWER MANHOLE(S) SHALL HAVE A BRICK PAVED SHELF AND INVERT CONSTRUCTED TO CONFORM TO THE SIZE OF PIPE AND FLOW AT CHANGES IN DIRECTION. THE INVERTS SHALL BE LAID OUT IN CURVES OF THE LONGEST RADIUS POSSIBLE TANGENT TO THE CENTER LINE OF THE SEWER PIPES. SHELVES SHALL BE CONSTRUCTED TO THE ELEVATION OF THE HIGHEST PIPE CROWN AND SLOPE TO DRAIN TOWARD THE FLOWING THROUGH CHANNEL. UNDERLAYMENT OF INVERT AND SHELF SHALL CONSIST OF BRICK MASONRY.
10. MANHOLE FRAMES AND COVERS SHALL BE OF HEAVY DUTY DESIGN AND PROVIDE A 30 INCH OPENING. A 3 INCH (MINIMUM HEIGHT) LETTER "S" SHALL BE PLAINLY CAST INTO THE CENTER OF EACH COVER.
11. A SEWAGE GRINDER PUMP SHALL BE INSTALLED IN LOCATION IDENTIFIED ON PLAN WITH THE CONTROL PANEL/ALARM ATTACHED TO A READILY VISIBLE AND ACCESIBLE PEDESTAL. INSTALLATION MUST PROVIDE VISIBILITY OF ALARM AND MEET LOCAL REGULATIONS/CODES. THE INSTALLER SHALL USE "ENVIRONMENTAL ONE CORP" MODEL GP-2016 OR APPROVED EQUAL. CONCRETE THRUST BLOCKS SHALL BE INSTALLED AT ALL BENDS IN THE PRESSURE SEWER LINE.
12. A LEAKAGE TEST SHALL BE PERFORMED ON THE ENTIRE SEWER SYSTEM IN ACCORDANCE WITH THE TOWN OF ACTON'S SEWER RULES AND REGULATIONS.
13. PUMPS SHALL BE INSTALLED AND TESTED IN ACCORDANCE WITH ENVIRONMENTAL ONE CORP'S SPECIFICATIONS AND THE TOWN OF ACTON'S GUIDELINES.
14. THE OWNER SHALL KEEP AND MAINTAIN A GENERATOR ONSITE IN ACCORDANCE WITH ENVIRONMENTAL ONE CORP'S SPECIFICATIONS.
15. F.R. MAHONEY & ASSOCIATES, INC. SALES REPRESENTATIVES' CAN BE CONTACTED AT (781) 982-9300 OR ENVIRONMENTAL ONE CORP. DIRECTLY AT (518) 346-6161.
16. THE CONTRACTOR SHALL REPAIR AND/OR RECONNECT ALL EXISTING DRAINS ENCOUNTERED DURING INSTALLATION OF PROPOSED SEWER CONNECTION.
17. ALL DISTURBED AREAS SHALL BE RESTORED TO ORIGINAL CONDITIONS. ALL LAWN PAVEMENT AREAS SHALL BE SAW CUT AND REPAVED TO MATCH EXISTING THICKNESS', PAVEMENT AREAS SHALL BE SAW CUT AND REPAVED TO MATCH EXISTING THICKNESS', BUT NO LESS THAN 3".
18. ALL PROPOSED SEWER LINES ARE TO BE 6" SDR 35 PVC. A NEOPRENE RUBBER BOOT MAY BE UTILIZED AT CONNECTION OF EXISTING SEWER LINE TO PROPOSED 6" PIPE. 22° BENDS MAY BE USED NEAR CONNECTION TO ADJUST ALIGNMENT. MATCH EXISTING SLOPE OF SEWER SERVICE CONNECTIONS BUT NOT LESS THAN 1%.

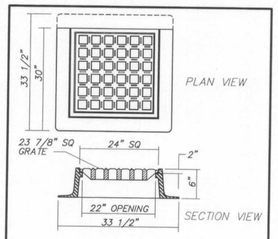

FRAME: LEBARON LF246-2
GRATE: LEBARON L24SG1

FULLY MACHINED AND INTERCHANGABLE FRAMES AND COVERS.
HIGH QUALITY MATERIALS AND WORKMANSHIP
COAL TAR EPOXY PAINTED.
NO ROCK COVERS.
H-20 LOADING RATE

CATCH BASIN FRAME AND GRATE
NOT TO SCALE

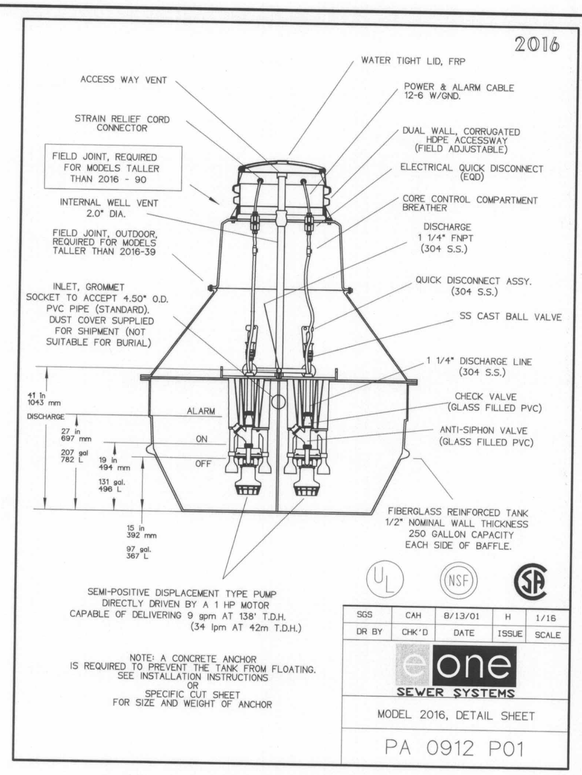

SGS	CAH	8/13/01	H	1/16
DR BY	CHK'D	DATE	ISSUE	SCALE

e one SEWER SYSTEMS

MODEL 2016, DETAIL SHEET

PA 0912 P01

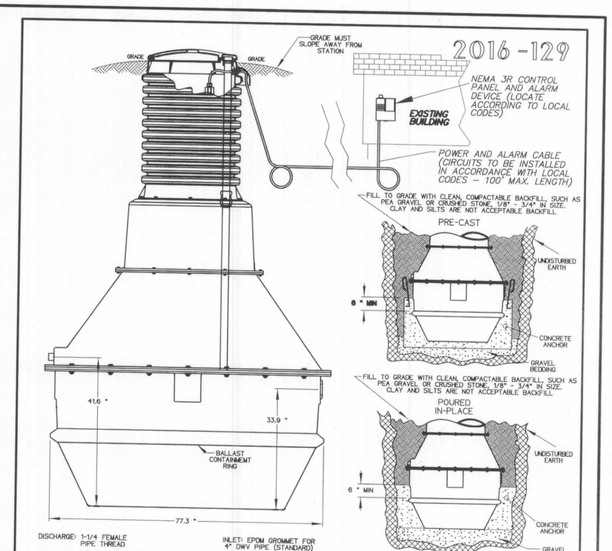

**SEE INSTALLATION INSTRUTIONS FOR SPECIFIC DIAMETERS AND HEIGHTS REQUIRED FOR PROPER CONTAINMENT WHEN USING 2016 PRE-CAST BALLASTS

NOTES:
1. AN EMERGENCY GENERATOR RECEPTACLE TRANSFER PANEL WITH BATTERY BACKUP SHALL BE PROVIDED.
2. A CONCRETE ANCHOR OF 15500 LBS (103 CF) IS REQ. ON ALL MODEL 2016 129" STATIONS.

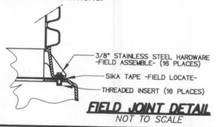

FIELD JOINT DETAIL
NOT TO SCALE

SGS	CAH	8/13/01	B	1/16
DR BY	CHK'D	DATE	ISSUE	SCALE

e one SEWER SYSTEMS

MODEL 2016-129

PA 0905 P03

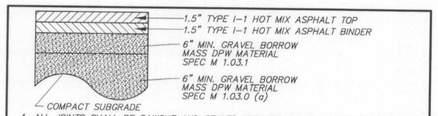

1. ALL JOINTS SHALL BE SAWCUT AND SEALED WITH EMULSION - SAND TOP EDGE.
2. ALL BACKFILL (INCLUDING ANY NEW MATERIAL ADDED) SHALL BE COMPACTED IN LIFTS NOT EXCEEDING 6" TO 95% OF MAXIMUM DRY DENSITY - STANDARD PROCTOR.
3. ALL STRUCTURES WITHIN THE PATCH AREA SHALL BE RESET TO FINISH GRADE.
4. ALL MATERIALS AND CONSTRUCTION SHALL CONFORM TO CURRENT TOWN OF ACTON SPECIFICATIONS - AVAILABLE AT THE ENGINEERING OFFICE OF THE DEPARTMENT OF PUBLIC WORKS.

FULL PAVEMENT PATCH DETAIL
NOT TO SCALE

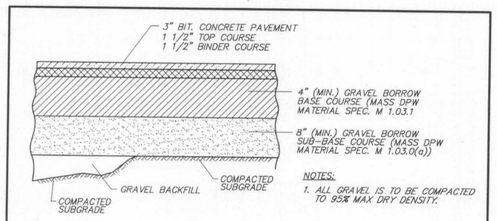

NOTES:
1. ALL GRAVEL IS TO BE COMPACTED TO 95% MAX DRY DENSITY.

STANDARD PAVEMENT DETAIL
NOT TO SCALE

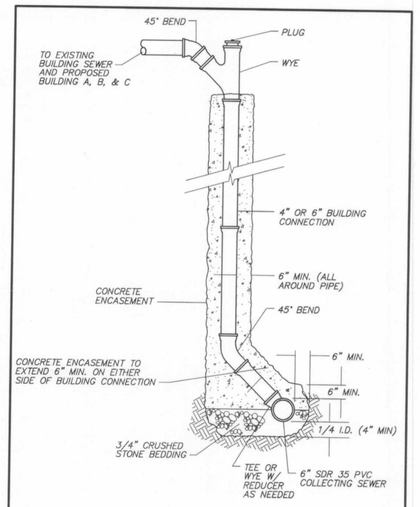

TYPICAL DEEP SEWER CONNECTION
NOT TO SCALE

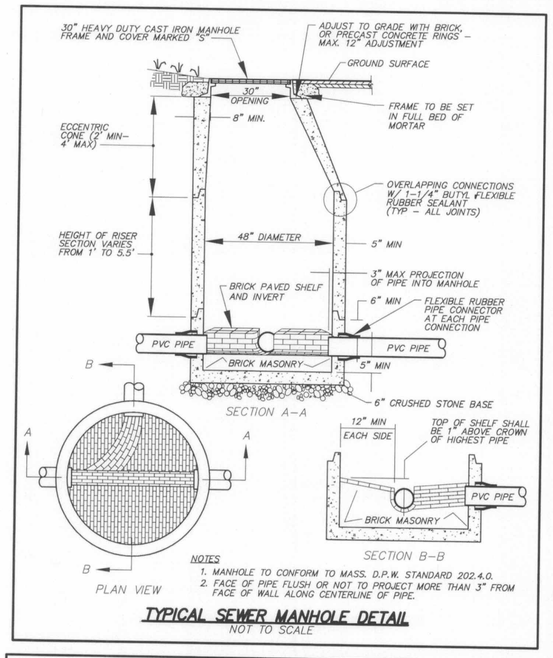

NOTES
1. MANHOLE TO CONFORM TO MASS. D.P.W. STANDARD 202.4.0.
2. FACE OF PIPE FLUSH OR NOT TO PROJECT MORE THAN 3" FROM FACE OF WALL ALONG CENTERLINE OF PIPE.

TYPICAL SEWER MANHOLE DETAIL
NOT TO SCALE

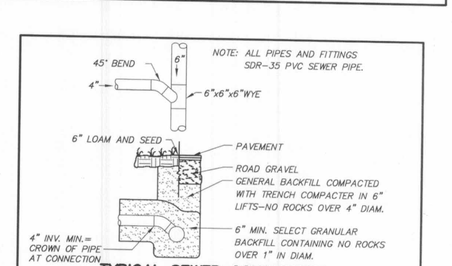

TYPICAL SEWER CONNECTION
NOT TO SCALE

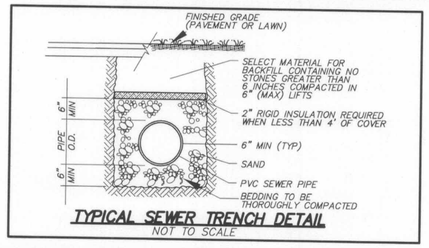

TYPICAL SEWER TRENCH DETAIL
NOT TO SCALE

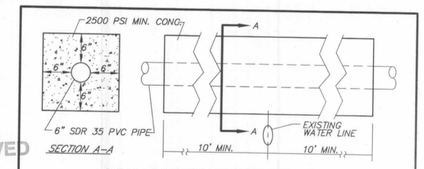

CONCRETE ENCASEMENT DETAIL
NOT TO SCALE

RECEIVED
FEB 21 2008
ACTON BOARD OF HEALTH

4 HIGH STREET
ACTON, MASS.

DETAIL SHEET 2

FOR: FAULKNER MILL REALTY, LLC
SCALE: AS SHOWN DATE: APRIL 4, 2007
DATE: OCTOBER 18, 2007

STAMSKI AND McNARY, INC.
80 HARRIS STREET - ACTON, MASS.
ENGINEERING - PLANNING - SURVEYING

COMMONWEALTH OF MASSACHUSETTS JOSEPH MARCH CIVIL #40472 REGISTERED PROFESSIONAL ENGINEER

COMMONWEALTH OF MASSACHUSETTS WILLIAM F. McNARY No. 30753 PROFESSIONAL LAND SURVEYOR