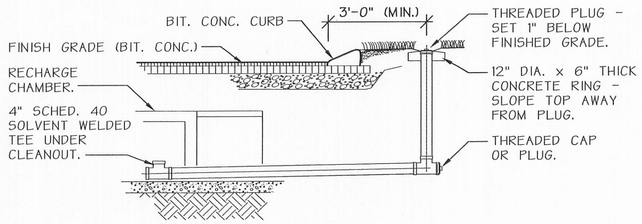

MONITORING WELL DETAIL

N.T.S.

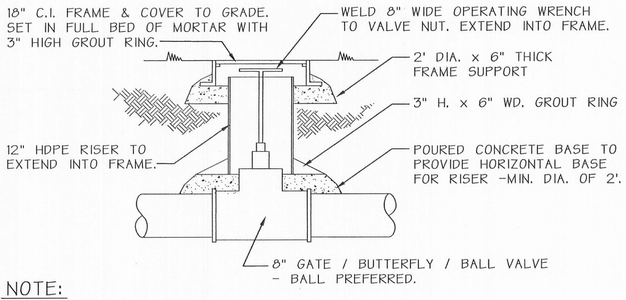

NOTE:

1. PURPOSE IS TO ALLOW FLOW FROM CATCH BASIN TO BE CLOSED IN CASE OF HAZARDOUS WASTE SPILL.

STORMCEPTOR DRAIN GATE DETAIL

N.T.S.

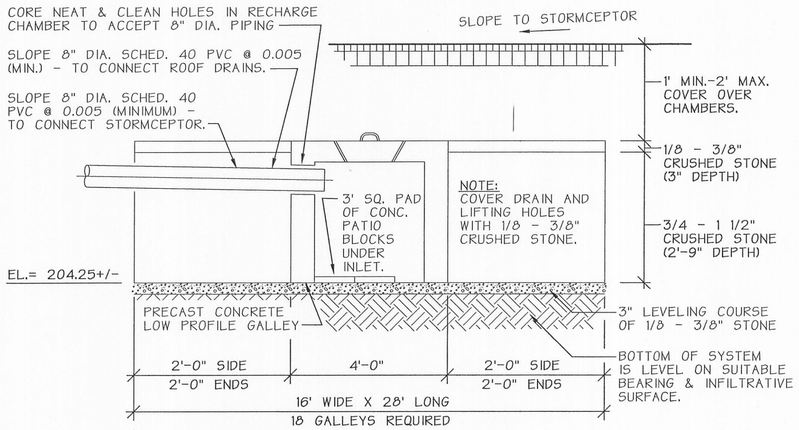

GALLEY CROSS SECTION

NOTES:

1. PRECAST CONCRETE LOW PROFILE GALLIES TO BE BY: SHEA CONCRETE PRODUCTS, INC. MODEL #'S: LE-CGH AND LE-EGH (PH. 1-978-658-2645) OR APPROVED EQUAL.
2. PRECAST CONCRETE TO BE 4,000 PSI MINIMUM AFTER 28 DAYS.
3. APPROVED GEOTECHNICAL DRAINAGE FABRIC TO EXTEND 5' BEYOND STONE ON ALL SIDES.

PRECAST CONCRETE RECHARGE CHAMBERS

N.T.S.

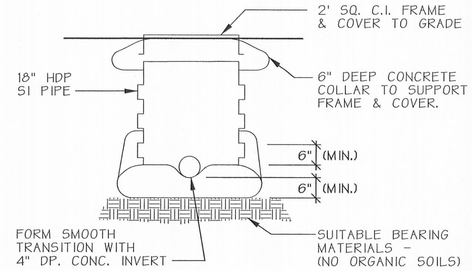

CLEANOUT DETAIL

N.T.S.

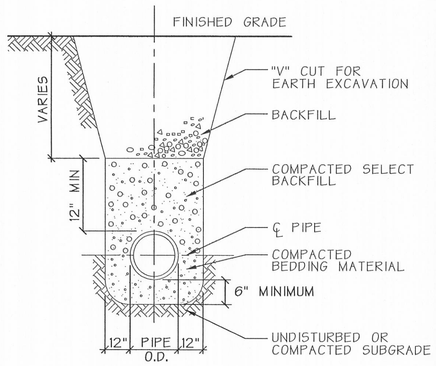

TRENCH SECTION HIGH DENSITY POLYETHYLENE PIPE

N.T.S.

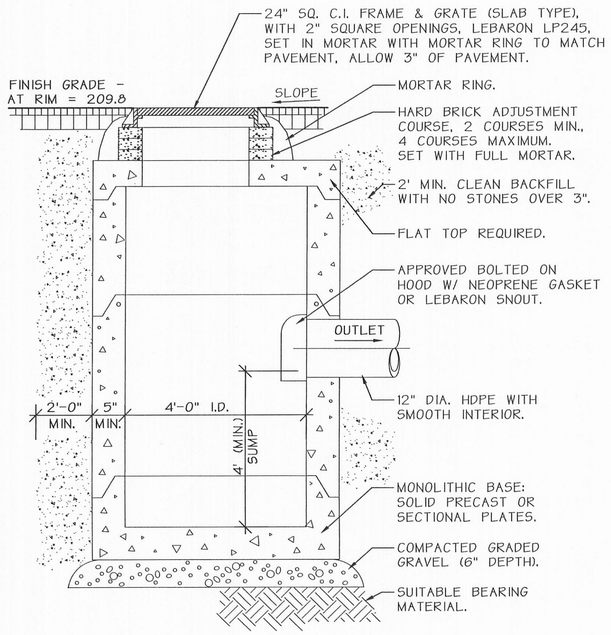

NOTES:

1. MANHOLE SHALL BE HS-20 LOAD COMPLIANT.
2. FRAME AND GRATE SHALL BE 24" SQUARE WITH 2" SQUARE OPENINGS OR APPROVED EQUAL.
3. ALL CONSTRUCTION JOINTS SHALL BE SEALED WITH A MINIMUM OF A 1" BUTYL-RUBBER SEALANT CAULKING MATERIAL OR EQUIVALENT.

PRECAST CONCRETE CATCH BASIN

N.T.S.

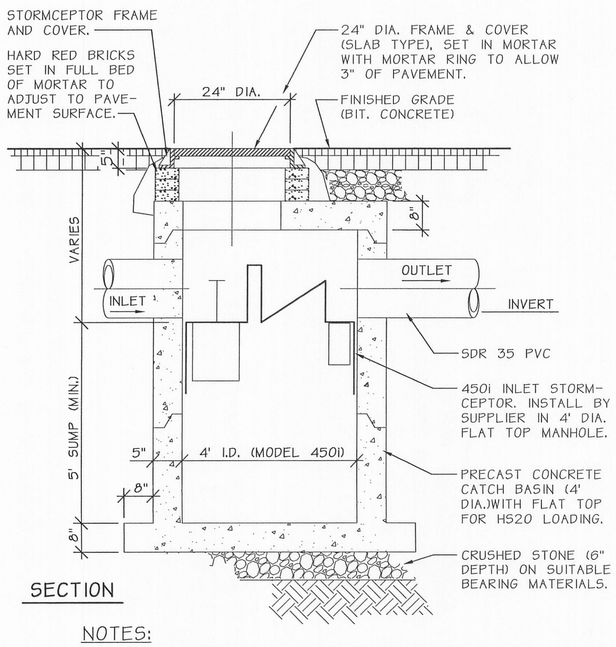

SECTION

NOTES:

1. CONTRACTOR SHALL SUBMIT SHOP DRAWINGS (SHOWING TYPE OF UNIT, CONNECTIONS, SIZING, ETC.) TO ENGINEER FOR APPROVAL.
2. ALL CONSTRUCTION JOINTS SHALL BE SEALED WITH A MINIMUM OF A 1" BUTYL-RUBBER SEALANT CAULKING MATERIAL OR EQUIVALENT.
3. LOCATE STORMCEPTOR (PH. 1.800.909.7763) AT LOCATION MARKED "IN-LINE" STORMCEPTOR. STORMCEPTOR (MODEL #4501), OUTLET = APPROX. 207.9, INVERT AT CHAMBER = APPROX. 207.0.

INLET STORMCEPTOR DETAIL

N.T.S.

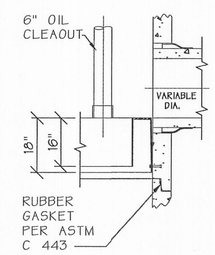

OUTLET CONNECTION

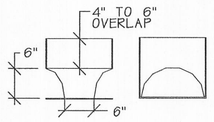

ENLARGED INLET TEE DROP PIPE

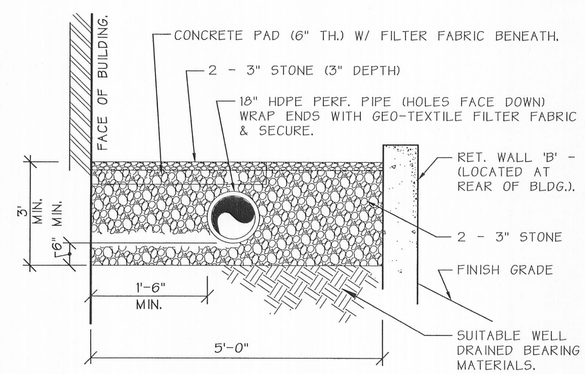

RECHARGE TRENCH DETAIL

N.T.S.

120483

COMMONWEALTH OF MASSACHUSETTS
MARK DONOHOE
CIVIL
No. 27148
REGISTERED PROFESSIONAL ENGINEER

No.	DATE	DESCRIPTION
4	11/17/03	BRD. OF SELECTMEN, TOWN REVIEW
3	9/18/03	TOWN AGENCY REVIEW
2	6/9/99	SITE PLAN COMMITTEE COMMENTS
1	3/5/99	SITE PLAN COMMITTEE COMMENTS

REVISIONS

SITE DETAILS - SHEET 2

40 SUDBURY ROAD
(FORMERLY 65-71 POWDER MILL ROAD)
ACTON, MASSACHUSETTS 01720

PREPARED FOR:
OLD MILL DEVELOPMENT TRUST
6 PROCTOR STREET ACTON, MA 01720

NOT TO SCALE DATE: DECEMBER 4, 2003

Since 1967
ACTON SURVEY & ENGINEERING, INC.
97 GREAT ROAD • P.O. BOX 666 • ACTON, MA 01720
PH. (978) 263-3666 FAX (978) 635-0218

SHEET 6 OF 8 6055 B26