Acton Waste Water Treatment Plant Photovoltaic System Feasibility Study

November 19, 2009

Prepared For

Town of Acton

472 Main Street
Acton, MA 01720
(978) 264-9615

By

New Energy Options, Inc.
410 Great Road, B-6
Littleton, MA 01460
www.newenergyoptions.com
(978) 952-2444

NEW ENERGY OPTIONS, INC. ®

Table of Contents

1 EXECUTIVE SUMMARY 6

2 SAFETY IN PHOTOVOLTAIC TECHNOLOGY 9

3 INTRODUCTION: TECHNICAL & FINANCIAL ANALYSIS 11

3.1 OVERVIEW 11
3.2 EXISTING SITE CONDITIONS 11
3.3 EXISTING ENERGY FINANCIAL CONSIDERATIONS 12

4 ACTON WWTP PV SYSTEM TECHNICAL ASSESSMENT 14

4.1 SAFETY DISCLAIMER 14
4.2 PRACTICAL TECHNICAL OVERVIEW: COMMERCIAL SCALE PV SYSTEMS 14
4.2.1 Modules 15
4.2.2 Inverters 19
4.2.3 Balance of System (BOS) 20
4.3 AWWTP ELECTRICAL SYSTEM INTERCONNECTION OPTIONS 22
4.4 AWWTP INSTALLATION LOCATIONS AND SOLAR RESOURCE 26
4.5 COMMERCIALLY AVAILABLE PV SYSTEM OPTIONS 30
4.6 PV TECHNOLOGY REPEATABILITY AND SCALABILITY AT AWWTP 33
4.7 PERMITS, APPROVALS, AUTHORIZATIONS, CODES, AND STANDARDS 34
4.7.1 Building Permit 34
4.7.2 Electrical Permit 35
4.7.3 Electric Utility Interconnection Application 35
4.7.4 Massachusetts & National Electric Code Compliance 38
4.8 MONITORING, METERING AND DATA ACQUISITION SYSTEMS 38
4.8.1 Technology Options 38
4.8.2 Public Outreach and Educational Opportunities 40
4.9 PHOTOVOLTAIC SYSTEM MAINTENANCE 42
4.9.1 Routine Maintenance 42
4.9.2 Warranties 43
4.10 CONSTRUCTION TIMELINE: SOLICITATION TO COMMISSIONING 44

5 ACTON WWTP PV SYSTEM FINANCIAL ASSESSMENT 46

5.1 ECONOMIC ANALYSIS DISCLAIMER 46
5.2 ECONOMIC ANALYSIS OF PV AS A CAPITAL ASSET 46
5.2.1 Theoretical Background 47
5.2.2 Photovoltaic Economics Expressed in Peak Watts 48
5.2.3 Life of Investment, Simple Payback, IRR, Underlying Assumptions 49
5.2.3.1 Life of Investment 49

5.2.3.2 Simple Payback....50
5.2.3.3 Internal Rate of Return (IRR)....50
5.2.3.4 Underlying Assumptions....51
5.3 RANGE OF PROJECT COSTS & DETERMINING FACTORS....51
5.4 IMPACT OF PV ON AWWTP ELECTRICITY ENERGY & DEMAND CHARGES....52
5.4.1 AWWTP Electricity Rate B2-Large General Secondary....52
5.4.2 Net Metering....52
5.5 FEDERAL INCENTIVE ENVIRONMENT....52
5.5.1 Federal Clean Renewable Energy Bonds (CREBs)....52
5.5.2 Tax Credits and Deductions....53
5.6 RENEWABLE ENERGY SECONDARY ATTRIBUTES MARKETS....53
5.6.1 Renewable Energy Certificate (REC) Market....53
5.6.2 Generation Information System (GIS)....54
5.6.3 Chicago Climate Exchange Carbon Trading....55
5.7 POWER PURCHASE AGREEMENTS (PPA)....56
5.8 PERFORMANCE SPECIFICATION BASED BID SOLICITATIONS....57
5.9 HYPOTHETICAL 168 KW AND 15.9 KW PV SYSTEM FINANCIAL ANALYSIS....59

6 ACTON WWTP: TWO PV SYSTEM DESIGNS....60

6.1 HYPOTHETICAL SYSTEMS....60
6.1.1 Nominal 16 kW PV System....60
6.1.2 Nominal 168 kW PV System....62
6.1.3 Photovoltaic Technology Comparison....63
6.1.4 Financial Analysis of Nominal 168kW Example System....65

7 CONCLUSIONS & RECOMMENDATIONS....68

7.1 CONCLUSIONS....68
7.2 RECOMMENDATIONS....69

8 APPENDIX 1: MODULE & INVERTER SPECIFICATIONS....70

8.1 EVERGREEN SOLAR ES-A-210 210 WATT PHOTOVOLTAIC MODULE....70
8.2 SOLECTRIA PVI-82 82 KW PHOTOVOLTAIC INVERTER....70
8.3 SHARP SOLAR ND-72ERUC/ND-72ELUC 72 WATT PHOTOVOLTAIC MODULE....70
8.4 SHARP SOLAR ND-N2ECUC 144 WATT PHOTOVOLTAIC MODULE....70
8.5 SOLECTRIA PVI-15 15 KW PHOTOVOLTAIC INVERTER....70

9 APPENDIX 2: PV PRINCIPLES & PRACTICES TUTORIAL....71

9.1 SAFETY....71
9.2 PRACTICAL OVERVIEW FOR COMMERCIAL/INSTITUTIONAL FACILITIES MANAGERS....71
9.3 WHAT YOU NEED TO KNOW AND NO MORE....72
9.3.1 Read Through the "Getting Started"....72
9.4 GETTING STARTED: THE BASIC BASICS....73
9.4.1 PV Cells & Sunlight....73
9.4.2 Cells, Modules, Panels, and Arrays....74

9.4.3 Kinds of "Technology" *75*
9.4.4 Performance Dependant Upon Environment *76*
9.5 How You Use PV: Use as DC or Convert (Invert) to AC 77
9.5.1 DC Utilization *77*
9.5.2 Invert to AC *78*
9.5.2.1 Stand-alone Systems 78
9.5.2.2 Grid-Tied Systems 78
9.5.2.3 Hybrid System (w/storage) 79
9.6 PV: What it is and What it is Not 79
9.6.1 Energy vs. Power *80*
9.6.2 How PV Works with the Grid *80*
9.7 Reliability and Performance 80
9.7.1 Reliability *80*
9.7.2 Performance *80*
9.8 Photovoltaic System Cell & Module Series Parallel Combinations 81
9.8.1 Series for Voltage *81*
9.8.2 Parallel for Current *82*
9.8.3 Cells/Modules/Arrays *83*
9.9 Inverters 84
9.9.1 Basic Function *84*
9.9.2 Sizes and Parameters *84*
9.9.3 Safety Features *85*

Table of Figures

Figure 1: Satellite image Acton WWTP (Bing maps, 2009) 12
Figure 2: Typical polycrystalline module, black anodized aluminum frame. (Image Courtesy of Evergreen Solar) 16
Figure 3: Typical 60/82/95kW photovoltaic inverter 19
Figure 4: Typical grid-connected PV system configuration 22
Figure 5: Four potential interconnection points 26
Figure 6: Aerial image of main building (Bing maps 2009) 27
Figure 7: Attached roof mounted PV system located on the roof of the Odor Control building at the Deer Island WWTP. (Photo courtesy MWRA Deer Island) 28
Figure 8: Typical PV ground mount design. 29
Figure 9: Available un-shaded PV array area on Rapid Infiltration Basins (base image Bing maps, 2009) 32
Figure 10: PV data acquisition system web display (Fat Spaniel Technologies, Queens Botanical Garden.) 41
Figure 11: Typical project timelines for commercial PV systems. 45
Figure 12: Conceptual model of PV energy cost 48

Figure 13: AWWTP hypothetical 16 kW PV system 1-line drawing (following page): 61
Figure 14: AWWTP hypothetical 16 kW PV system 1-line drawing (following page): 61
Figure 15: AWWTP hypothetical 168 kW PV system 1-line drawing (following page): 62
Figure 16: AWWTP hypothetical 168 kW PV system 1-line drawing (following page): 62
Figure 17. Single Cell Figure 18. Cells in a Module....74
Figure 19. Panels in an Array Figure 20. Modules in a Panel....75
Figure 21. Shading impacts on PV performance 77
Figure 22. DC only system....77
Figure 23. Stand-Alone PV System 78
Figure 24. Grid-Tied PV System 79
Figure 25. Hybrid PV System (w/storage)....79
Figure 26. Voltage for One Cell 81
Figure 27. Voltage for Two Cells in Series....82
Figure 28. Voltage for Four Cells in Series 82
Figure 29. Current for One Cell....82
Figure 30. Current for Two Cells in Parallel 83
Figure 31. Current for Four Cells in Parallel....83
Figure 32. 4 x 4 cell module....84

List of Tables

Table 1: Electrical characteristics for 200/205/210W Evergreen line of polycrystalline modules....17
Table 2: Relative power density, area and weight for three typical PV systems .33
Table 3: PTS monitoring companies....40
Table 4: Technology comparison for roof mounted array....63
Table 5: Technology comparison for ground mounted array....64
Table 6: 30 year financial profile for nominal 168kW PV system at $4/Wp....67
Table 7: 30 year financial profile for nominal 168kW PV system at $5/Wp....67
Table 8: 30 year financial profile for nominal 168kW PV system at $6/Wp....67
Table 9: Comparison of PV Technologies....76

1 Executive Summary

New Energy Options has been asked to assess the feasibility of installing a commercial scale solar photovoltaic (PV) system at the Acton Wastewater Treatment Plant (AWWTP). On September 30th 2009 we conducted a site inspection and have determined that the facility has at least two locations which would be ideal for PV systems. One of the options is a nominal 16kW system that could be installed on the south-facing standing seam roof and on the deck of the operations building. The second option is a nominal 168kW system that would be installed on the berms in the Rapid Infiltration Basin (RIBs). The RIB site would be a ground mount installation and would supply pad mounted inverters next to the arrays.

A financial analysis has been done and depending upon several factors, including Acton's risk tolerance and liquidity, future state and federal of incentives, and expectations regarding the future price of conventional electricity, a financial case can be made for pursuing either of these installations.

This feasibility study is organized in three sections: technical assessment, financial assessment, and two 20% technical design examples that depict the two options previously mentioned.

The technical assessment is intended to answer the question, "Is the AWWTP an appropriate site for a photovoltaic installation?" The answer to this question is that the Acton WWTP does have excellent locations for one small and one medium scale photovoltaic installation. These conclusions will be explained in detail in the study. In addition however, it is the objective of the study to provide sufficient information so that Acton's engineering staff, even without direct experience with PV, will be able to make well-informed decisions regarding

possible procurement and placement of these systems. Further, this study should serve as a technology primer that will allow Acton's technical and facilities staff to consider other venues in Acton's portfolio as possible PV installation locations.

The financial portion of this report is written to outline the major economic factors that will influence any decision regarding the acquisition of a photovoltaic system. These factors include possible state and federal incentives, different financing and ownership models, the value of secondary "green" attributes of the PV generated energy, and the avoided cost of the conventional electrical energy that the photovoltaic production displaces. This study provides calculations of simple payback, net present value, benefits to cost ratio, and internal rate of return under several different scenarios.

Because these systems have productive lives of 25 to 30 years or more, any assessment of the economic factors is dependent upon projections or assumptions regarding future of the secondary attributes markets and the future of conventional energy costs. This report provides the tools that will permit Acton's financial planners to evaluate multiple scenarios with whatever assumptions they believe are valid. By using the explanations of the economics underlying PV technology and with the analysis provided in this report, they can arrive at an assessment of the worth of the proposed photovoltaic system from an investment perspective.

The final section of this study contains two 20% designs, each of which could be implemented at the candidate installation locations at the Acton WWTP. These 20% designs are, in fact, based upon actual photovoltaic system designs that have been installed, inspected, and are functioning today. The intent of these designs is to provide the Acton facility engineering staff explicit and detailed

examples, from a system perspective, of what is possible at AWWTP and, potentially, other town locations.

This report addresses the specifics of the Acton Waste Water Treatment Plant, the site for which the feasibility study was commissioned. It also identifies and explains the general principles –technical and financial-- involved in the acquisition of a renewable energy generating technology such as photovoltaic system. In doing so, the report provides a planning tool applicable beyond its immediate purpose.

2 Safety in Photovoltaic Technology

This document is not intended to be a design guide. The design calculations included in this study are only for preliminary assessment of likely scenarios. Full design instructions are beyond the scope of this study. Design and installation of any renewable energy system should be done by qualified professionals. The intent of this feasibility study is to enable Acton's capital asset procurement and facilities engineering teams to evaluate the primary economic and technical costs and benefits for any proposed photovoltaic project and make well-informed decisions. Should the Town of Acton decide to proceed with this type of project, this feasibility study will serve ***only*** as a guide to procurement and bid evaluation.

This document is not intended to be an operations manual, nor is it intended to describe any one particular PV system. Installation and maintenance of any photovoltaic system should only be performed by qualified, and where applicable, licensed professionals. However, there are several basic safety related facts about photovoltaic systems that everyone involved with them should know. First among these is the fact that PV modules produce power, and thus represent a potential shock hazard, whenever sunlight is shining on them. Caution should always be taken to measure the voltage present on equipment terminals (disconnects, inverters, etc.) and to use approved lockout procedures when working on any PV equipment. Also in some situations it is possible for a piece of equipment to be energized from both the line and load sides. All equipment of this sort should be clearly marked as such. Lock out and tag out procedures that are already in place at the system facility should be adapted to the specifics of the photovoltaic system. Finally, as with any piece of equipment, it is essential for anyone working with it to read and understand the manuals that come with the equipment. The practices described

here reference the 2008 version of the Massachusetts Electrical Code (MEC) 547 CMR 12.00.

3 Introduction: Technical & Financial Analysis

3.1 Overview

This feasibility study for the installation of a solar photovoltaic (PV) system at the Acton Waste Water Treatment Plant (AWWTP) is submitted to the Town of Acton by New Energy Options, Inc. (NEO). This feasibility study will include both a technical and financial analysis, with brief tutorials on the fundamentals of the technology and the economic foundations which are unique to these installations. In addition to the technical and financial analyses, the deliverable will include two technical scenarios (AWWTP site-specific example PV systems) rendered to approximately 20% design completion. The technical scenarios will provide typical timelines for projects of their type and size.

3.2 Existing Site Conditions

The site being evaluated is the Acton Waste Water Treatment Plant located at 20 Adams Street in Acton, Massachusetts. The facility is set on a slope between Adams Street and the Asebet River. It is supplied by a medium voltage service which feeds a pad-mount transformer. The primary service is stepped down to 480V which is distributed throughout the complex from a main distribution switchgear. An emergency generator feeds one side of a transfer switch, the other side of which is supplied by the utility service.

Figure 1 is a satellite image of the operations building and sand filtration beds of the plant. There are few locations that are presently either un-forested or undeveloped. The areas that have been identified as likely sites for photovoltaic system installations are the roof and a portion of the deck of the Operations building and portions of the area over the berms between the sand.

Figure 1: Satellite image Acton WWTP (Bing maps, 2009)

3.3 Existing Energy Financial Considerations

Presently the Acton WWTP purchases energy from Consolidated Edison. Acton is served by the energy distribution company NSTAR and has a B2-Large General-Secondary time of use rate. The average cost of energy is $0.064 per kilowatt-hour. The nominal delivery cost is $0.078 per kilowatt-hour yielding a delivered cost of energy of approximately $0.0142 per kilowatt-hour[1]. Monthly usage is about 48.65 MWh at a cost of about $6,908.

A large number of factors enter into the financial analysis of a photovoltaic system. These will be enumerated individually below. However, the delivered cost of energy, and more importantly the future cost of energy, from the facility's conventional suppliers is one of the single most important variables. Because

[1] Based upon NSTAR and Con Edison invoices from August 2008 to July 2009.

the cost of conventional energy can only be assured for the term of a single energy contract, this variable entails significant uncertainty. In addition to the value of the avoided cost of conventional energy that comes with PV, there are new and rapidly evolving markets for the “green” for its attributes. Because these markets are in their infancy and because the factors that will determine future supply and demand are difficult, if not impossible, to predict, these variables also contribute to the uncertainty in the analysis of an investment in PV technology. At present, in Massachusetts, the most relevant market is that of ISO New England’s Renewable Energy Credits (REC). This will be explained in greater detail later.

4 Acton WWTP PV System Technical Assessment

4.1 Safety Disclaimer

This document is not intended to be a design, installation or operations manual. The design calculations included in this study are only for preliminary assessment of likely scenarios. Design and installation of any renewable energy system should be done by qualified professionals. Installation and maintenance of any photovoltaic system should only be performed by qualified, and where applicable, licensed professionals.

4.2 Practical Technical Overview: Commercial Scale PV Systems[2]

It has been just fifty five years since the first practical photovoltaic cell was demonstrated at Bell Laboratories in 1954. The earliest power applications for the technology were used in satellites. The first terrestrial applications were even more recent and systems that operate in parallel with the utility grid are no more than about thirty years old. Fifteen years ago about 80% of the systems being installed were off grid or stand-alone configurations supplying power to remote cabins, RF repeater stations, village power and water pumping applications. Only 20% of installations were connected to the electrical grid. Today the vast majority of new installations are connected to the grid.

A photovoltaic system such as would be considered for installation at the AWWTP would be a grid-tied configuration without any consideration for electrical energy storage (typically batteries). The purpose of grid-tied systems is not to provide backup power. Rather the purpose is to generate energy on the

[2] For a detailed explanation of the underlying fundamentals of PV technology refer to Appendix 2, "Principles and Practices in Photovoltaic Technology: A Practical Guide for Building Managers, Developers and Designers," by New Energy Options, Inc.

customer's side of the revenue meter, from a source that has no cost of fuel, thereby reducing the energy consumption from the grid and, if applicable, the consumer's demand and time of use (TOU) charges.

Grid-tied photovoltaic systems are comprised of three fundamental sub-systems:

1) Photovoltaic modules
2) Inverter or inverters
3) Balance of System (BOS)

4.2.1 Modules

PV modules[3] are the fundamental building blocks of any photovoltaic system and, in most practical applications, represent slightly less than half of the installed cost. The photovoltaic module converts incident solar radiation directly into DC electricity. The conversion efficiencies of typical photovoltaic technologies range from 5 to 20 percent, with some more "exotic" varieties reaching about 32 percent. The most common offerings used in construction today are the polycrystalline variety and perform in the range of 11 to 14 percent conversion efficiency. It is in the area of conversion efficiency that the greatest advances in the industry are still being made. Figure 2 is an example of a framed PV module, typical of what is used in construction today.

[3] Modules are frequently referred to as "panels." However, in keeping with the language of the National Electrical Code (690.1 Scope) and in an attempt to reduce confusion over terminology, the term we will use in this study for the component that we typically purchase and which makes up the fundamental building block of most installed systems will be "module."

Figure 2: Typical polycrystalline module, black anodized aluminum frame. (Image Courtesy of Evergreen Solar)

But while efficiency is important it is not the most critical parameter when considering photovoltaic technology. The fundamental metric of the PV industry is the peak Watt, or Watt, or Watt STC. "STC" stands for Standard Test Conditions. Every aspect of the technology can be –and usually is-- thought of in terms of peak Watts. This is a measured value and is the "rating" of the module. The standardized conditions (STC) under which these measurements are performed are:

--1000W/m^2 irradiance

--25°C cell temperature

--Air mass of 1.5

The power output value measured under these laboratory/factory controlled conditions becomes the STC rating or nameplate rating of the module[4]. In Table 1 the STC rating is the "Maximum Power (Pm)" for the module being described.

ELECTRICAL characteristics

Standard Test Conditions (STC)[1]				
	ES-A-200 -fa3*	ES-A-205 -fa3*	ES-A-210 -fa3*	
P_{mp}[2]	200	205	210	W
$P_{tolerance}$	-0/+4.99 (-0/+2.5)	-0/+4.99 (-0/+2.5)	-0/+4.99 (-0/+2.5)	W (%)
$P_{mp, max}$	204.99	209.99	214.99	W
$P_{mp, min}$	200.00	205.00	210.00	W
P_{ptc}[3]	180.6	185.2	189.8	W
η_{min}	12.7	13.1	13.4	%
V_{mp}	18.1	18.2	18.3	V
I_{mp}	11.05	11.27	11.48	A
V_{oc}	22.6	22.7	22.8	V
I_{sc}	11.80	11.93	12.11	A

Nominal Operating Cell Temperature Conditions (NOCT)[4]				
T_{NOCT}	45.4	45.4	45.4	°C
P_{max}	146.4	150.1	153.8	W
V_{mp}	16.5	16.6	16.7	V
I_{mp}	8.87	9.04	9.21	A
V_{oc}	20.8	21.0	21.1	V
I_{sc}	9.44	9.57	9.76	A

MECHANICAL specifications

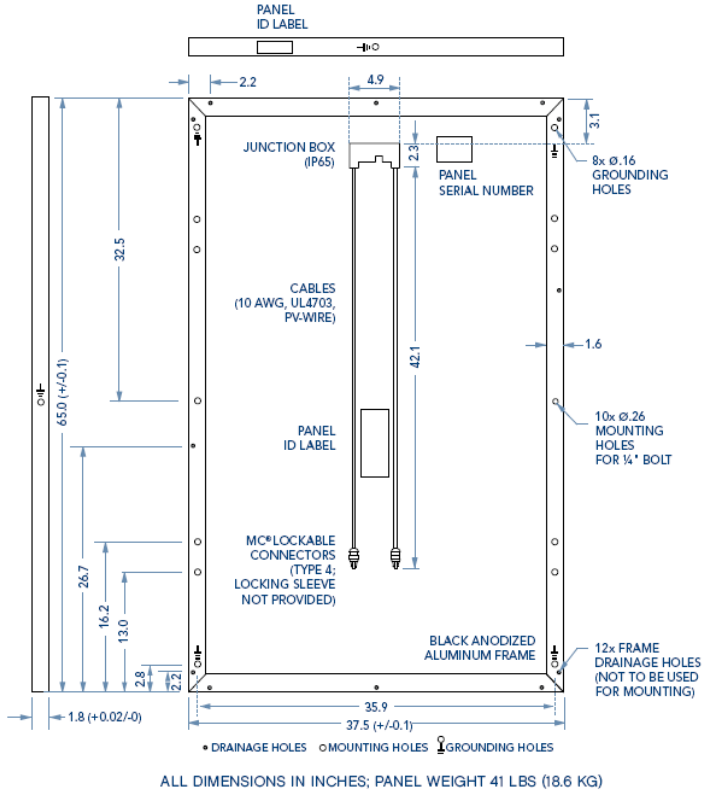

Table 1: Electrical characteristics for 200/205/210W Evergreen line of polycrystalline modules

The STC power rating of a module or an array will be the starting point of most considerations regarding practical installations. Typically, when the size of an array is first proposed, it will be expressed in Peak Watts (Wp) or Watts STC. When system considerations are discussed, they will typically be discussed on a per Watt (Wp) basis. When engineering evaluations are at issue, whether they

[4] There is another popular rating system known as the PVUSA Test Conditions (PTC) which attempts to take into consideration actual environmental effects on performance. PTC rating is 1000W/m^2, 20°C ambient temperature, and wind speed of 1 m/s. PTC rating is lower than the STC rating.

be quantities of racking material, or land use, or roof space or man-hours, they will be discussed on a per Watt (Wp) basis.

Photovoltaic systems are fundamentally scalable in every sense, based upon the parameters of the module. Almost without exception, once a designer has selected a make and model of module, the design is constrained by that decision. Module types are rarely, if ever, mixed in a single design. The system design voltage is an integer multiple of the module voltage parameter. The system current is an integer multiple of the module current (see Appendix 2, "Principles and Practices Tutorial"). Similarly, the system layout, be it on a roof or as part of a parking structure, is defined by the same integer multiples of the basic module mechanical dimensions.

Photovoltaic modules used in construction today are a relatively mature technology. The most common versions are silicon-based semiconductor products of either single crystal (monocrystalline) or multi crystal (polycrystalline) form. "Thin film" technologies, such as amorphous silicon (a-Si), cadmium telluride (CdTe), copper indium diselenide (CIS) and copper indium gallium (di)selenide (CIGS) are increasing in popularity but still make up a much smaller fraction of the commercial products being installed. Most have no significant hazardous material content[5]. Today modules typically carry performance warranties of twenty-five years. Generally, with the exception of installations which require significant investment in mounting such as some building integrated photovoltaic (BIPV) applications, the PV modules account for slightly less than half of the installed system cost. In today's market environment photovoltaic modules are becoming commodities and, while installers will often have strategic relationships with one or more module manufacturers, they will actively seek out the lowest price in the market at the time of their bid to the

[5] One form of module that does contain a hazardous material component is the Cadmium Telluride based thin film technology. These are generally not marketed to residential or small commercial applications. First Solar, the world's leading manufacturer of CdTe modules has an end-of-life take-back clause in their sales contracts.

customer. *If you have received a bid and more than a few months have passed you should be certain to confirm the price of the quote.*

4.2.2 Inverters

Inverter technology has matured enormously in just the last twenty years, following along with the revolution in power electronics and microprocessor-based control. Photovoltaic inverters are still a relatively small market when compared to markets for devices such as variable frequency drives (VFD). However in the last ten years there has been exponential growth in product selection for small residential models. In the area of commercial and utility scale inverter products there are now many more sizes from more manufacturers. Recently a number of main-stream electrical equipment manufacturers such as Schneider Electric, Eaton and ABB have used their VFD capabilities as a spring board to enter the PV inverter market. Efficiencies for commercial products, at or near their rated power, are reaching the 97 to 98 percent range. Most commercial inverter products have remote system monitoring options.

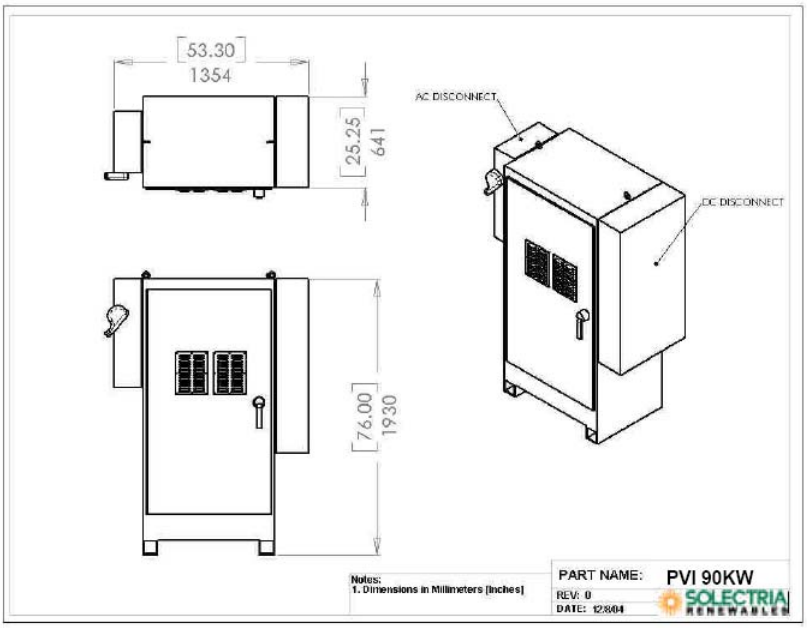

Typical Installation

String Sizing:
www.solren.com

Figure 3: Typical 60/82/95kW photovoltaic inverter

Because photovoltaic systems can run at their rated power for several hours during the middle of the day they are considered to be continuous. For the purpose of preliminary electrical calculation of the size of the overcurrent device used to interconnect a photovoltaic inverter to the electric power system, the designer must multiply the inverter "continuous output current rating" by a factor of 1.25 (690.8(A)&(B)). In some cases the continuous output current is a parameter that is listed in the manufacturer's specifications. In other cases the manufacturer only lists the rated power. An example of a calculation for a 100kW inverter with a 480V output where output current is not listed can be seen in the equation below:

$$(100{,}000W / (480V * 1.732)) * 1.25 = 150A$$

The interconnection overcurrent device for this system must have a rating of at least 150A regardless of whether the dc rating of the PV array powering that inverter is 70kW or 140kW.

By far the most widely accepted performance standards for inverters –required by almost all utilities as a precondition for interconnection— are the UL1741 and IEEE 1547 standards. Any inverter complying with these standards will, in most cases, require no additional protective relaying. If, as might be the case with the Acton WWTP, it is desired to integrate some of the control functions of the inverter with the normal power/emergency power control system this can be accomplished with a signal connection (usually a set of dry contacts) with most commercial inverters.

4.2.3 Balance of System (BOS)

Balance of system, or BOS, represents everything else besides the modules and inverter needed to make up a working system. This category will include all disconnects, rack structures, conduits, conductors, circuit breakers, fuses, and

junction boxes. One electrical component that is unique to photovoltaic systems is what has come to be known as a “combiner box.” This is an enclosure that contains multiple overcurrent devices and terminals for combined output current. Schematically these devices look exactly like distribution panelboards or load centers. However because their function is to collect current contributions from many small sources, instead of distributing current to many small loads, their designs differ from typical electrical distribution equipment. All of the BOS components –except for the racks— are available in versions that are listed by nationally recognized testing laboratories such as Underwriters Laboratories (UL), Edison Testing Labs (ETL) or others.

The installation of all of the electrical balance of system components relies on exactly the same electrical trade craft and approved wiring practices as is found anywhere else in electrical construction. Current and voltage ratings for components on the dc side of the inverter must be carefully observed because the array side of most PV systems will operate in a range in excess of 250V. Most commercial and many residential PV systems operate in a nominal voltage range of 600Vdc. Module voltage is inversely proportional to cell temperature. The precise voltage of any array is heavily dependant upon ambient temperature and thus local average high ambient temperature and record low ambient temperature are recommended reference points when calculating the open circuit voltage on which the selection of conductor insulation and component voltage ratings are based.

The mounting technologies rely on a variety of mechanical skill sets but are generally designed to be intuitive and require no specialized tooling or apparatus. Many of the most popular mounting systems are designed using extruded aluminum racks with proprietary interconnection components. Many mounting systems can achieve high wind ratings with few or no roof penetrations. One of the key factors that must be considered in designing any photovoltaic mounting

system is the wind loading of the completed array. This issue must be addressed for the specific local conditions. Similarly, for roof mounted arrays, the capacity of the building to accommodate the added load to the structure should be analyzed by a qualified professional.

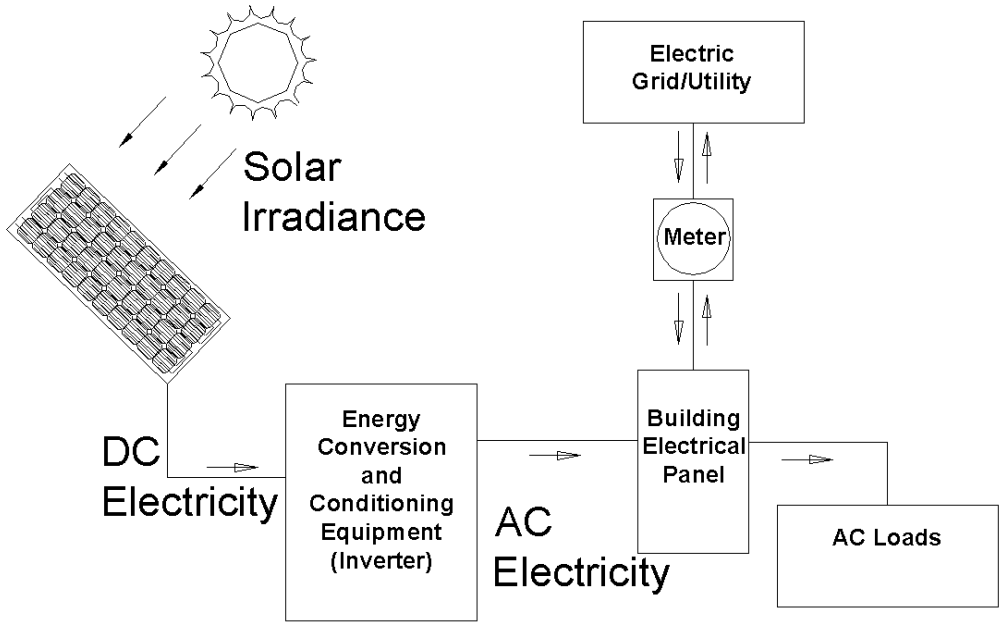

Figure 4: Typical grid-connected PV system configuration

4.3 AWWTP Electrical System Interconnection Options

Most of the rules that impact the interconnection of the ac output of a photovoltaic inverter with the utility grid are found in the Massachusetts Electrical Code[6]. The section of the MEC that defines the requirements of interconnection is article 690.64

690.64 Point of Connection
The output of a photovoltaic power source shall be connected as specified in 690.64(A) or 690.64(B).
(A) Supply Side A photovoltaic power source shall be permitted to be connected to the supply side of the service disconnecting means as permitted in 230.82(6).
(B) Load Side A photovoltaic power source shall be permitted to be connected to the load side of the service disconnecting means of the other source(s) at any

[6] The MEC is, for the purposes of photovoltaic system design, essentially identical to the National Electrical Code (NEC). As of the 2008 edition, the key section of the NEC that deals with issues related to PV, article 690, is entirely unchanged in the MEC.

distribution equipment on the premises, provided that all of the following conditions are met:
(1) Each source interconnection shall be made at a dedicated circuit breaker or fusible disconnecting means.
(2) The sum of the ampere ratings of overcurrent devices in circuits supplying power to a busbar or conductor shall not exceed the rating of the busbar or conductor.
Exception: For a dwelling unit, the sum of the ampere ratings of the overcurrent devices shall not exceed 120 percent of the rating of the busbar or conductor.
(3) The interconnection point shall be on the line side of all ground-fault protection equipment.
Exception: Connection shall be permitted to be made to the load side of ground-fault protection, provided that there is ground-fault protection for equipment from all ground-fault current sources.
(4) Equipment containing overcurrent devices in circuits supplying power to a busbar or conductor shall be marked to indicate the presence of all sources.
Exception: Equipment with power supplied from a single point of connection.
(5) Circuit breakers, if backfed, shall be identified for such operation. Dedicated circuit breakers backfed from listed utility-interactive inverters complying with 690.60 shall not be required to be individually clamped to the panelboard busbars. A front panel shall clamp all circuit breakers to the panelboard busbars. Main circuit breakers connected directly to energized feeders shall also be individually clamped.

There are three key provisions of this article that impact the selection of an interconnection location to the AWWTP electrical distribution system. These are:

1) The photovoltaic system is permitted to connect either to the supply side or the load side of the service disconnecting means.
2) For load side connections, the sum of the ampere rating of overcurrent devices supplying current to a busbar must not exceed the rating of the busbar.
3) If an interconnection is made to the load side of a ground fault device ground fault protection must be provided for equipment from all ground fault sources.

Based on these requirements and the ampere ratings of the main service disconnecting means overcurrent setting and the switchgear bus, there are four likely interconnection scenarios. Figure 5 illustrates these four potential interconnection points.

1) For small system such as might be installed on the operations build roof and/or deck the inverter could interconnect almost anywhere in the plant distribution system. This would be done by backfeeding a branch circuit breaker in almost any panelboard. For example a 13kW three phase 480V inverter would require 20A circuit breaker for interconnection. Any 480V panelboard or motor control center with a busbar rating of 100A supplied by a 100A or smaller feeder breaker would accommodate this. In example #1 in Figure 5 we are showing the three phase output of such a 13kW inverter connecting to a three-pole breaker in LP1.

2) For a larger system such as one that might require an overcurrent device rated up to 400A a feeder breaker in the main switch gear may be used. The busbar rating in the main gear is 2000A and the main circuit breaker is rated at 2000A. 120% of the busbar rating is 2400A [MEC 690.64(B(2))]. In example #2 in Figure 5, we show this interconnection. Note that services with ground fault protection must be protected from all ground-fault current sources. If the interconnected inverter does not possess ac ground fault protection this must be provided by other means such as a discrete ground fault relay.

3) For PV systems that require interconnection overcurrent protection greater than 400A, PV systems are permitted to interconnect to the supply side of the service disconnecting means. This form of interconnection establishes a new, parallel service (with all normally applicable service disconnecting means and overcurrent protection requirements) for the PV system. For AWWTP this type of interconnection will not be necessary due to the space constraints and the resulting limited available array size. Example #3 in Figure 5 illustrates this form of interconnection.

4) The fourth interconnection illustrated here is one that may be necessary for a PV system larger than about 50kW. Depending upon the characteristics and relative sizes of the inverter and the generator, it may not be possible to run the inverter and generator at the same time. When an inverter is connected to a common bus with a generator of comparable size the possibility exist that their interactions will have adverse effects on one or both of the devices. Depending upon the frequency at which the inverter is run –once per month, multiple days in summer, on a dispatch schedule— it may be possible to address the issue with manual disconnects or with control logic that prevents the inverter from running when the generator is running. However if the system owner wants the ability to run the generator at any time, such as for remotely dispatched load shedding, it may be advantageous to interconnect between the main service disconnect and the automatic transfer switch. This alternative is shown as example #4 in Figure 5.

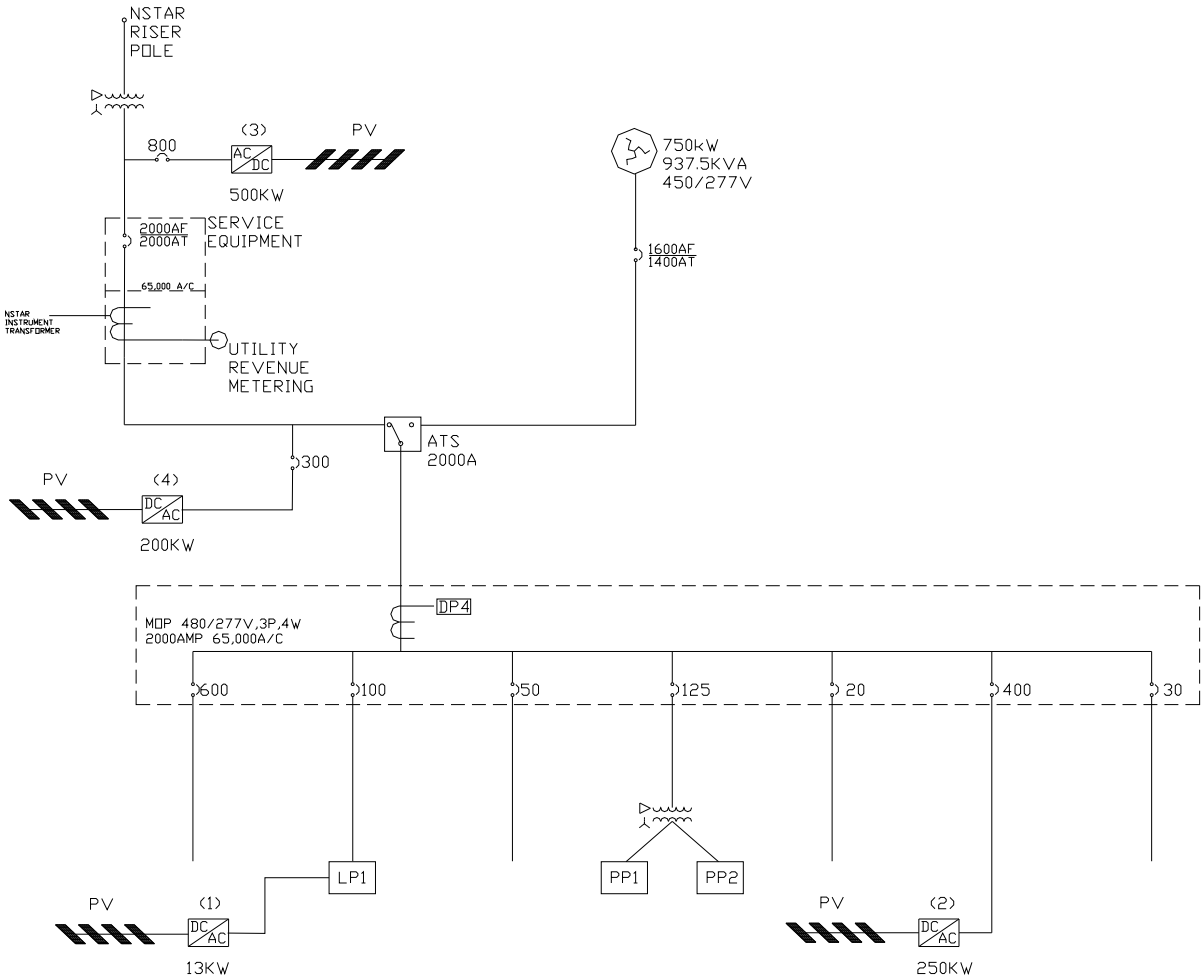

Figure 5: Four potential interconnection points

4.4 AWWTP Installation Locations and Solar Resource

During our site visit on September 30th a tour of the complete WWTP facility was conducted. Of the locations seen during that visit, two stand out as the most immediate and likely hosts for potential photovoltaic installations. These sites, seen in Figure 6, are the south-facing roof and deck of the Operations building and the berms that divide the rapid infiltration basin (RIBs).

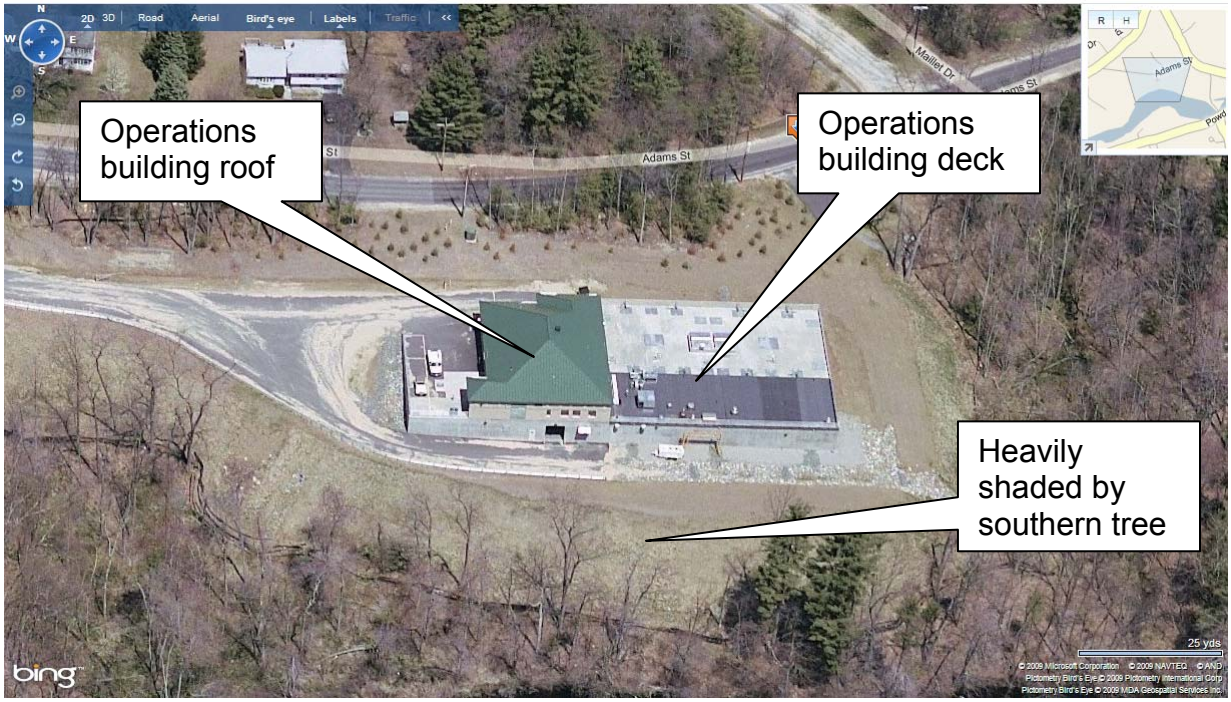

Figure 6: Aerial image of main building (Bing maps 2009)

The roof is a form of metal standing seam construction with a pitch of about 22.5 degrees. The building faces approximately 2 degrees east of true south. A structural analysis of the roof's carrying capacity should be conducted for any proposed PV system. From the perspective of mounting of a PV array, however, there are a number of attachment methods and components that can accommodate most, if not all, roofs of this sort. Many of these attachment methods are "non-penetrating" and some are able to be installed solely with adhesive.

The southern half of the decking at the Operations building has been approved as a potential installation site. It has a number of shading obstructions but a small 14 x 53 foot section is unobstructed. An array installation approach that would be applicable to the deck of the Operations building would be some form of solidly attached, penetrating racking system. This is a fairly common installation approach for photovoltaic arrays. It allows modules to be installed at

their optimum tilt regardless of local wind regime. Figure 7 shows an example of this type of mounting used on Deer Island.

Figure 7: Attached roof mounted PV system located on the roof of the Odor Control building at the Deer Island WWTP. (Photo courtesy MWRA Deer Island)

The second site that has been identified as a possible candidate is the berms at the RIBs. The northern two thirds of the berms have an acceptable solar resource and ground mounting techniques are available for this type of terrain. For this site the one or more inverters would be located near the valve chamber and would connect to the electrical room in the Operations building via an

existing spare conduit. Figure 8 illustrates one of many ground mount technologies that could be applied for the AWWTP RIBs.

Figure 8: Typical PV ground mount design.

The term "solar resource" refers to the solar irradiance exposure a particular site receives throughout the course of a year, usually expressed in terms of kWh/m^2/day. One kWh/m^2 is also referred to as one "sun hour." An irradiance intensity or power density of 1kW/ m^2 or 1000W/ m^2 is referred to as "one sun." The solar resource value of any location is a product of a number of factors including the site latitude, elevation, regional weather and local microclimate. If array tilt and azimuth angles, and shading obstructions are included one can apply this concept to specific physical structures. The two locations identified in the site visit have excellent solar resource. The roof of the Operations building is unaffected by the nearest shading obstructions on its south side. The location identified on the Operations building deck also has an unobstructed view of the

horizon. As such, for our latitude, its solar resource is nearly perfect. The shallow 22.5 degree slope of the roof enhances the summer resource but reduces the annual energy production capability of the site slightly. The solar resource for the northern two thirds of the RIBs is very good. There is a tree line approximately 130 feet to the south of the edge of the filter beds but for the northern two thirds this is not an issue.

4.5 Commercially Available PV System Options

At present there is a wide variety of well-established products –modules, inverters and BOS components— available for a photovoltaic system designer to select from. The specific selection of products will likely be the designer/installer's choice, however knowledge of these product choices and their features will help the customer to understand his or her options and articulate their preferences as a performance requirement to the designer. The choice of products can also be driven by government policy decisions intended to favor locally manufactured products. There is one manufacturer of commercial photovoltaic modules, two or three inverter manufacturers, and several manufacturers of data acquisition systems and other balance of system components located in Massachusetts.

Often times few of the options available to the designer will be of concern to the system owner. Unless the there is a specific esthetic or structural feature that derives directly from the product, such as its appearance when used as part of a curtain wall or as part of an awning, or unless the buyer has a particular motivation to showcase a specific manufacturer's product, the choice of products for the final design is largely unimportant to the system owner. Once the owner has specified the required size (capacity in kWp) and selected the performance features that they want in the system then the remaining choices will be based largely on price.

There is one option that may be of importance in the case of the Acton Waste Water Treatment Plant. If the Town has a particular kWp capacity that it wants to achieve or a specific annual kWh energy target it wants to meet then the choice of photovoltaic "technology" may be important. In this context, by "technology" we mean the type of cells that make up the modules and their respective conversion efficiencies (see section 6.1.3 Conversion Efficiency Comparison). Depending upon the conversion efficiency the module selected the available space for installation can accommodate a larger or smaller array capacity.

As an example we have designed an array layout for the Rapid Infiltration Basins that covers approximately two thirds of the berms. This is the extent of the berms that is unshaded by the tree line to the south and depending upon the module selected the resulting array capacities differ significantly. For the available area we have three different commercially available PV modules with three very different conversion efficiencies. The modules chosen are the Sunpower monocrystalline 315 (19.3% efficient), the Evergreen Solar polycrystalline Spruce 210W (13.54% efficient) and the Uni-Solar amorphous silicon PVL-136 (6.3% efficient) [All three module spec sheets are included in appendix 1]. The array area can be seen in the overlay to the satellite photo in Figure 9. For the available area nominal capacities are:

Sunpower array (Monocrystalline)	242kW
Evergreen array (Polycrystalline)	168kW
UniSolar array (Amorphous Si)	72kW

Figure 9: Available un-shaded PV array area on Rapid Infiltration Basins (base image Bing maps, 2009)

Although it is not important for this ground mount installation there are other differences between these products relate directly to module construction and mounting technology that are worth noting. For roof mounted system the most important of these differences is the weight of the installed array. The weight of the Sunpower and Evergreen modules, per unit roof area, is very similar. The Uni-Solar laminates, by contrast, are significantly lighter and add about half the total weight to the roof for on a per-Watt basis as either the Sunpower or Evergreen products. The approximate power densities, weight per unit areas, weight per unit power, and maximum array capacities for these three technologies can be seen in Table 2 below.

	Monocrystalline Sunpower SPR-315E-WHT-D	**Polycrystalline** Evergreen ES-A-210	**Amorphous Si** Uni-Solar PVL-68
Power Density W/m² (W/ft²)	178 W/m² (16.53 W/ft²)	182.6 W/m² (12.4 W/ft²)	52.7W/m² (4.90W/ft²)
Weight/Watt kg/kW (lbs/kW)	76.2 kg/kW (168 lbs/kW)	88.57 kg/kW (194.9 lbs/kW)	57.4 kg/kW (127 lbs/kW)
Weight/Area kg/m² (kg/ft²)	14.7 kg/m² (1.75 lbs/ft²)	16.17 kg/m² (2.42 lbs/ft²)	3.0 kg/m² (0.61 lbs/ft²)

Table 2: Relative power density, area and weight for three typical PV systems

4.6 PV Technology Repeatability and Scalability at AWWTP

A fundamental feature of photovoltaic technology is its modularity. The preceding example described an array area of approximately 13,500 square feet, however most of the same principles apply to much larger and much smaller systems. The technology is almost infinitely scalable. The importance of this feature of the technology to the Acton WWTP is that systems can be designed to accommodate almost any budget or set of technical objectives or constraints. If, for example, the maximum grant available from a state agency is capped at particular value per installation then it may make sense to install two systems in successive years to maximize the share of the total cost provided through the grant process. If a specific capacity is desired but it will not all fit in the available area of the RIB berms an additional system or systems could be installed at other town venues[7]. Projects can be broken up either temporally, physically, or both.

[7] One feature of the Massachusetts "Clean Communities Act passed in the summer of 2009 was the creation of "virtual net metering." This section of the net metering law allows organizations with multiple buildings, each with its own electrical service, to generate at one location and offset

An exploratory effort can be conducted with a modest-sized system with much of the same learning benefit as a much larger system.

4.7 Permits, Approvals, Authorizations, Codes, and Standards

With any photovoltaic installation in a private or municipal setting there will be a variety of permits and authorizations that will be required. This often becomes more involved than with other electrical technologies because of the overlap of jurisdictions due to the involvement of the local electric utility. In addition to the building, electrical and utility interconnection permits that accompany PV systems, ground mounted installations that are near wetland or other environmentally sensitive area will be subject to the permitting required of any construction by the Department of Environmental Protection through the local Department of Natural Resources. What follows is a description of most of the likely filing that any PV installation will require.

4.7.1 Building Permit

In Massachusetts the decision whether or not to require a building permit varies from municipality to municipality. Sections of the 7th Edition of 780 CMR State Building Code relating to the structural requirement of existing buildings for snow loads and seismic consideration have been reviewed by Board of building Regulations and standards over the past year and amendments have been voted on for roof mounted photovoltaic arrays. New language in these sections is expected to be adopted in early 2010 in the 8th Edition of 780 CMR. For the roof-mounted system described in this study we recommend review of the structure and attachment by a professional engineer licensed in the Commonwealth.

---

electricity consumption at another location. This topic will be addressed in greater detail in the financial section of this report.

4.7.2 Electrical Permit

As with any electrical work performed in the Commonwealth of Massachusetts, photovoltaic installations are subject to M.G.L 143 section 3L. Accordingly a permit must be filed with the inspector of wire within five days of commencing work. In addition to the statutory requirements for permitting and inspection, evidence of an approved electrical permit is a routine component of grant applications submissions. For smaller systems such as the example proposed for the roof of the operations building most experience solar contactors should be able to provide the necessary design. For systems such as the example proposed for the RIB we recommend the design be done by a professional engineer with solar experience, licensed in the Commonwealth.

4.7.3 Electric Utility Interconnection Application

Even though these systems are located on the customer's side of the point of common coupling, they have a direct impact upon the utility's[8] operation because they operate in parallel with their system. Regardless of size, from the smallest of residential PV systems to the largest commercial scale PV systems, if the inverter is connected in a grid-tied configuration, the system in operating in parallel with the entire grid. In principle –if represented schematically or in an equivalent circuit diagram— these photovoltaic inverters appear no different in their relationship to grid than a coal fired base load plant or a gas turbine. Accordingly the utilities require a variety of personnel and system protective functions before they will permit interconnection.

[8] In this document we will often refer to the entity that maintains the electrical power system and that delivers power to the customer as the "utility." To be precise, however, in Massachusetts that entity is a "distribution company" and not what we think of as a traditional vertically integrated utility. This distinction is also important in that the entity that the customer purchases their energy from has no standing in the interconnection issue in the context of the Massachusetts Standards for Interconnecting Distributed Generation. The interconnection application is filed with the customer's "distribution company."

Massachusetts has adopted standard interconnection requirements under the document heading, "Standards for Interconnecting Distributed Generation." Each investor owned utility [distribution company] in Massachusetts has adopted the basic content with some modifications. The distribution company serving the Acton WWTP is NSTAR. The full NSTAR interconnection tariff document can be downloaded from:

http://www.masstech.org/renewableenergy/public_policy/DG/tariff/2007-04-06-NSTAR-DG-Interconnection-Tariff-conformed.pdf

A document summarizing NSTAR's basic requirements for all interconnections to their system, titled, "Summary of Requirements For Interconnections Proposed On The NSTAR Electrical Grid," can be found at:

http://www.nstar.com/docs3/interconnections/summary.pdf?unique=20091108091844

There are three levels or "paths" for interconnection within the Massachusetts standard interconnection process. They are the Simplified, Expedited, and Standard processes.

The Simplified Process is reserved for very small –essentially residential and very small commercial-- installations. An application for a system that would fit on the Operations building would almost certainly be classified as a "Simplified" interconnection application. The maximum time allowed for the NSTAR to execute the entire Simplified Process is 15 days.

The Expedited application process is for systems greater than 10kW single phase or 25kW three phase which meet a number of additional criteria or pass a number of evaluation "screens." In particular the annual production of the

proposed PV system must be less than 7.5% of the annual energy consumption of the AWWTP. The example system we have proposed for the RIB exceeds this criterion and will not fall under the Expedited Process. The maximum time allowed for the NSTAR to execute the entire Expedited Process on a radial system is 40 days where no Supplemental Review is needed and 60 days where it is needed.

If the proposed system does not meet the criteria for the Simplified or Expedited process then the application will be subject to the Standard evaluation process with its associated Supplemental Review, Interconnection Study(ies) and potentially Impact and Detailed Studies. For systems with special site considerations such as those located on secondary distribution spot or grid networks (not the case for AWWTP or anywhere else in Acton) or for PV systems over 1MW in size additional utility studies will be required. In such cases, it is likely that the application evaluation will take longer and that additional engineering fees will be required. The photovoltaic system design may also require stamped drawings by a registered professional engineer. The maximum time allowed for the NSTAR to execute the entire Standard Process is 125 days for the Standard Review Process if the Customer goes directly to Standard Review and 150 days if the Customer goes from the Expedited Process into Standard Review.

Each application process has its own associated fees. For the Standard Process NSTAR will provide an estimate of cost for the required studies. The example system we have proposed for the RIB would fall under the Standard Process. For full details, including fees, time frames, and assessment criteria, please see the NSTAR document, NSTAR ELECTRIC COMPANY M.D.T.E. No. 162A, referenced above. In particular, the flow chart mapping the application process in Figure 1 illustrates the path between first contact with your account

representative and final approval of interconnection. Table 1 in the same document explains the timeframe for each application process.

4.7.4 Massachusetts & National Electric Code Compliance

Article 690 of the National Electrical Code (NEC), Solar Photovoltaic Systems, is the primary standard for electrical installation of photovoltaic systems in most of the United States. Massachusetts adopts the NEC to create the Massachusetts Electrical Code 527 CMR 12.00 (MEC) with a set of exceptions and additions. As of the 2008 Code cycle nothing in Article 690 of the NEC was modified in the MEC.

In addition to the specific requirements of Article 690 photovoltaic systems must meet all of the requirements stipulated in the rest of the Code. All approved wiring methods, unless specifically excluded by Article 690, are approved for use in the installation of photovoltaic systems.

4.8 Monitoring, Metering and Data Acquisition Systems

4.8.1 Technology Options

Presently there are a large number of commercially available monitoring systems for photovoltaic installations. Most inverters have some form of integrated LCD programming and status display. The options range from a simple, stand-alone kWh meter to a monitoring system with a real-time web display. For most of the incentive programs, a revenue-grade kilowatt-hour meter will be required to meter the ac output (generation) of the inverter. MTC requires that all PV projects receiving a Commonwealth Solar rebate calculated using a PV project size of over 10 kW (dc) must include an automated reporting system, which meets MTC requirements, and must report to the MTC Production Tracking System (PTS) for a minimum of five years. A number of commercial monitoring systems, such as those listed in Table 3, provide automatic reporting of the renewable energy certificates (REC). In facilities with supervisory control and

data acquisition (SCADA) systems or building energy management (BEM) systems the output of the PV data acquisition system can be fully integrated through connection to a remote terminal unit (RTU). This is an option for AWWTP.

Monitoring systems range in complexity and cost. Potential buyers should carefully consider the information that they, their audience, or their funding agency will require and specify all parameters and tolerances in the bid specification. At this point in the history of the photovoltaic industry, there are several manufacturers of data acquisition systems that should be able to meet any of the needs of a system for a facility such as the Acton WWTP.

Company	Website	Phone	Contact Email
ApterraTechnologies, LLC	www.ApterraTech.com	978-430-9069	info@ApterraTech.com
DECK Monitoring	www.deckmonitoring.com	503-224-5546	Freeman@deckmonitoring.com
Fat Spaniel	www.fatspaniel.com	408-279-5262	info@fatspaniel.com
Heliotronics	www.heliotronics.com	508-435-3032	info@heliotronics.com
Locus Energy	www.locusenergy.com	877-562-8736	info@locusenergy.com
MicroNet Solutions, LLC	www.micronetgroup.com	678-990-9800	srinik@micronetgroup.com
PowerDash	www.powerdash.com	617-864-0770	info@powerdash.com
Sun Edison LLC	www.sunedison.com	443-909-7200	www.sunedison.com/contact_monitoring.php
WattMetrics, LLC.	www.wattmetrics.com	802-356-2345	info@wattmetrics.com

Table 3: PTS monitoring companies

In addition to the automated reporting to remote third parties many data acquisition systems available today are capable of notifying the system owner of performance anomalies with email alerts. Many systems are now incorporating monitoring on the DC side down to the string or source circuit level.

A growing number photovoltaic inverter manufacturers and photovoltaic integrators are offering their own proprietary monitoring systems with their inverters and installations. A few of these companies are listed below.

Alteris Renewables, Inc.
www.alterisinc.com
Tel: 800-339-7804
info@alterisinc.com
(used for systems installed by Alteris only)

Nexamp (Nexamp FITRe)
http://www.nexamp.com/
Tel: 978.688.2700
info@Nexamp.com
(used for systems installed by Nexamp only)

PVPowered, Inc.
http://www.pvpowered.com/monitor.php
Tel: 541-312-3832
(used with PVPowered inverters only)

Solar Design Associates
www.solardesign.com
Tel: 978-456-6855
(used for systems installed by Solar Design Associates only)

Solectria Renewables, LLC (Solren view product)
http://www.solrenview.com/home.html
Tel: 978-683-9700
support@solrenview.com
sales@solrenview.com
(used with Solectria inverters only)

4.8.2 Public Outreach and Educational Opportunities

In addition to the status monitoring functions used for operational and energy reporting functions, data acquisition for photovoltaic systems is routinely used as

a teaching tool for engaging both the student population, as well as the community as a whole. The most common form that this takes is a web presence, with either real-time or periodic (e.g. once daily) updates. Web pages typically display the energy production graphically, often equating the energy produce by the PV system with the amount of car miles or hours of lighting it would displace. These displays can be incorporated into the host's web page such as that shown in the figure below.

Figure 10: PV data acquisition system web display (Fat Spaniel Technologies, Queens Botanical Garden.)

Below are some links to sample web sites.

Heliotronics (Worchester Polytechnic Institute, Worchester, MA):

http://www.sunviewer.net/demo/WPI.html

Solatrex (Andover, MA):

http://soltrex.com/systems.cfm?systemid=S00000000375&sortby=site&ascdesc=asc&startrow=1&watchid=SW0000000000&state=&q=

Fat Spaniel (Queens Botanical Garden, Queens, NY):
http://view2.fatspaniel.net/FST/Portal/QBG/

Solar Integrated (GSA Waltham, MA)
http://gsanara.rem-systems.com/

In addition to the web presence, the physical installation can serve as a destination for field trips, school groups, and as a training venue for town officials and maintenance personnel. Kiosk style displays are also available from many vendors.

4.9 Photovoltaic System Maintenance

4.9.1 Routine Maintenance

Routine maintenance for most photovoltaic systems is generally minimal. Photovoltaic systems are entirely automatic and self regulating and thus there are no "control" actions that are required of the system owner. There are a few simple rules regarding maintenance and an annual routine is certainly recommended. All of the inverters on the market today have self-monitoring status displays. Optional data acquisition systems, either integrated into the inverter or external, can bring the status report to the desktop at the site or, through a web link, to any computer anywhere in the world. After just few weeks of casual viewing of a graphical display of a system's daily power output maintenance staff will easily gain an understanding of what is normal and what constitutes an anomaly.

Periodic maintenance will include examination of the inverter. Some inverters have external heat sinks and these should be kept clean. Build up of soot and

dust from construction or diesel exhaust in garage locations, or plant debris, such as leave, in outdoor locations, should be removed. As with any power electronic device the dissipation of waste heat is critical to the longevity of the system.

In all grounded photovoltaic installations the dc "system ground" is established at the inverter by connecting it to the building ac service grounding electrode. It is at this point that ground fault current is measured and most inverters will display this parameter. Occasionally viewing the ground fault current reported by the inverter after a rainstorm will indicate what, if any, ground fault leakage current exists.

The PV array is comprised of many strings of modules separated by overcurrent devices. Once a year, on a day with uniform irradiance, the operating currents from all of the contributing strings should be measured. This is a very simple procedure that can be done easily with an inexpensive, hand held Hall Effect clamp-on meter. In addition, the open circuit voltage of each of strings should be measured and recorded. These simple measurements and observations will give the quickest and best indications of the health of the system and can all easily be performed by the facilities existing maintenance staff. If a data acquisition system with source circuit level current monitoring is used, the field measurement will be unnecessary.

4.9.2 Warranties

All major module manufacturers today provide written warranties that the module power rating will not decrease more than 10% of the initial minimum nameplate rating after either 10 or 12 years. Further they warrant that after 25 years the module power output will not decrease more than 20% of that initial rating. The initial power rating is equal to the "minimum power rating of the product specifications for the module." All of the manufacturer's ratings that we have seen reference this value. This value is the module's nameplate rating ***minus***

the lower tolerance of the module that is listed on the manufacturer's spec sheet. In other word the manufacturer warrants that module power rating will not decrease below some percentage (10% & 20%) of this minimum value that the module was guaranteed to produce when it was new. This wording is important for two reasons. First, because these limits are common to the industry as a whole. The second reason is because it is the modules, individually, that the manufacturer's warranties apply to and not the rating of the system as a whole.

Inverter manufacturers provide warranties of different lengths but will usually sell extended warranties at an additional change. At least one US inverter manufacturer now offers an optional 20 year warrantee. Others will likely follow. Most BOS components carry a warranty on "design, materials and workmanship" of five years. This is the very most that any manufacturer that we have seen will offer. Some manufacturers only offer two years on design, materials, and workmanship.

Typically wording is included in any contract with the photovoltaic installer requiring that the installation not compromise existing building roof warranty. In many cases the contractor is required to provide a written statement from the roofing contractor or manufacturer stating that the roof warranty has not been compromised.

4.10 Construction Timeline: Solicitation to Commissioning

Below is a description of a typical project timeline from initial planning, to issuance of RFP, to bid selection, through construction and commissioning. One variable that is outside of the control of the system owner and contractor is the schedule of the funding agency if project funding is sought. Typically, for a simple co-planer roof installation, as is being suggested for the Acton WWTP Operations building, the actual installation time is relatively brief. Two major

factors required to expedite projects of this sort are: 1) the thorough preparation of all permits and interconnection applications; 2) the prompt response to bidder's questions and turn-around time for submittal approval.

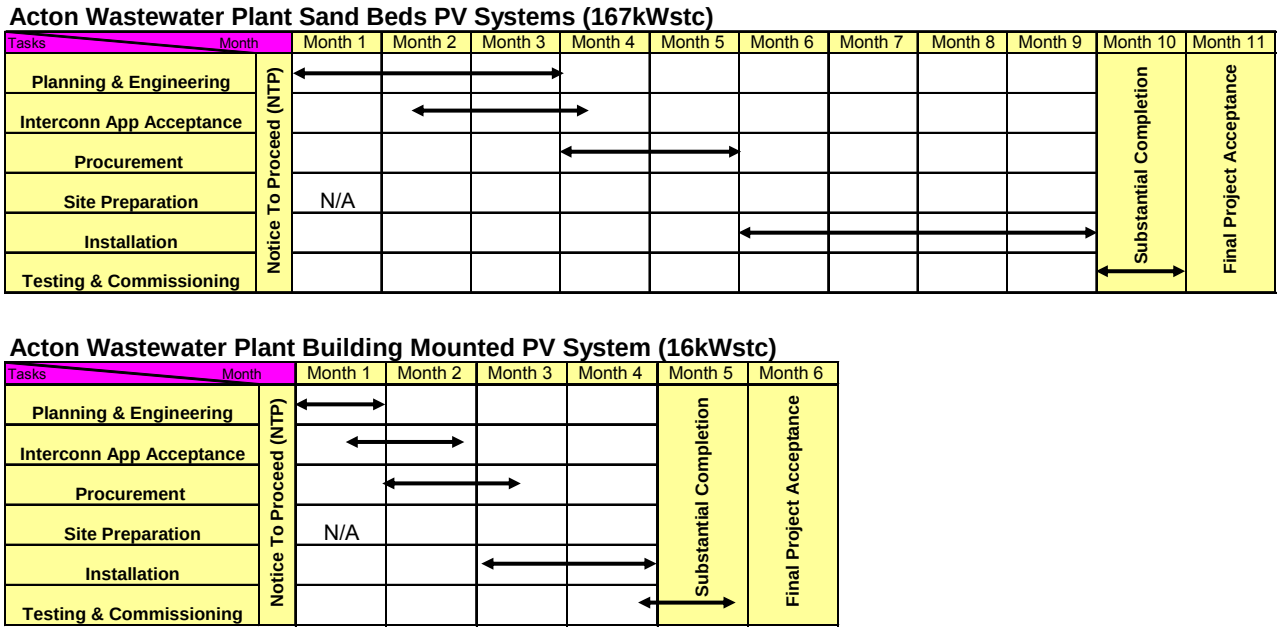

Figure 11: Typical project timelines for commercial PV systems.

5 Acton WWTP PV System Financial Assessment

5.1 Economic Analysis Disclaimer

The economic analysis in this feasibility study is intended only as a guide to assist in the understanding of the basic economic issues underlying photovoltaic technology and energy. Some parameters that are specific to the Acton WWTP have been included in financial calculations for hypothetical systems; however these are only for the purpose of illustration. Before considering an investment in a photovoltaic system the prospective owner should consult his or her financial experts. The value of PV energy is directly dependent upon the cost of the conventional energy that it displaces. Because energy contracts are not written for periods as long as the useful life of a PV system we can only estimate a final IRR based upon a set of assumptions. Past cost of energy is no guarantee of future cost of energy. The actual lifecycle financial performance may be lower or higher than the performance data quoted here.

5.2 Economic Analysis of PV as a Capital Asset

The financial analysis of a photovoltaic system, as well as those of other forms of renewable energy, is unlike those of other capital asset acquisitions. Fundamentally, what a system owner is buying when they purchase a photovoltaic system is not just capital equipment, but **future energy**. Using a financial metaphor, a renewable energy system can be thought of as an annuity, the future payments of which are fixed quantities of energy. The following discussion describes how these differences impact the financial analysis and decision process when analyzing the acquisition of a photovoltaic system.

5.2.1 Theoretical Background

Some of the features that distinguish the purchase of a photovoltaic system and the energy it produces from energy purchases from conventional sources are:

• All system costs are up front (financing is considered later).

• PV system is owned by a non-utility entity and the electrical energy produced by the PV system is owned by the system owner.

• The PV energy generating system is not dispatchable.

• The PV energy --behind the meter-- displaces conventional "market" energy at the system owner's cost of energy (and potentially reduces demand and time of use charges).

• Where Net Metering laws exist, the electrical grid provides a physical and financial "bank." In effect the energy and monetary value are stored in the grid and a financial accounting mechanism respectively.

The financial characterization of photovoltaic system is similar to that of energy conservation technologies, such as high efficiency lighting or variable frequency motor drives, in that the energy they --efficiency measures-- save is like the energy that renewable energy systems generate. One key difference is that, with on-site renewable energy generating capacity, the possibility exists that the customer can become a net exporter of energy. If the energy produced on-site is less than the total facility consumption its value will be your cost of energy. If a facility were to become a perennial exporter of energy, the compensation for the exported portion would be at the utility's avoided cost (the possibility exists but with any combination of PV systems that could be fit at the AWWTP export will not occur.)

In its most basic form, the calculation of the ***cost*** of photovoltaic energy is the financed cost of the system divided by the energy production over that system's productive lifetime. Figure 11 illustrates this comparison graphically. Time dependent debt payments are divided by energy production over the associated

time intervals resulting in a value of energy expressed in dollars per kilowatt-hour.

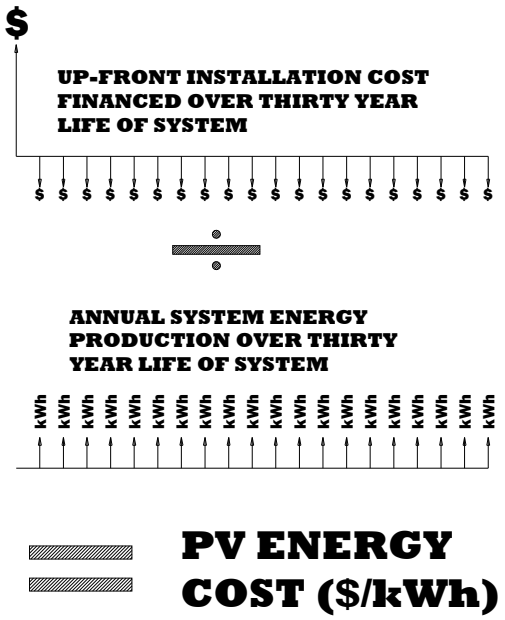

Figure 12: Conceptual model of PV energy cost

The previous analysis defines the ***cost*** of photovoltaic energy to the PV system owner. The ***price*** of that energy is determined by the owner's avoided cost for the equivalent energy and demand charges from conventional sources.

5.2.2 Photovoltaic Economics Expressed in Peak Watts

Any discussion of the economics must start with the definition of the industry's key metric, the peak Watt (Wp). For any product in the photovoltaic marketplace the key figure of merit is the peak Watt (or Watt STC or simply the Watt). This the power rating of the module measured under controlled laboratory conditions known as "Standard Test Conditions" or STC. This parameter is a standardized, measured value for any salable photovoltaic product (see "3.1.1 Modules" above.) As a metric it can be applied to the cost of modules, labor, switchgear, mounting structures, insurance, engineering services, data acquisition

equipment, subsidies, etc; all on a per unit basis. And at all time this metric references the factory STC rating of the module product being used.

As examples of the use of this metric consider the following:

--*"Present cost of photovoltaic modules is $2.10/Wp*[9]*."*
[Alternates for "Wp" may include: "W" or "W_{STC}"]

--*"The cost of extruded aluminum racks for arrays is $0.50/Wp."*

--*"Incentives under the MTC LORI grant program can be as high as $5/Wp."*

5.2.3 Life of Investment, Simple Payback, IRR, Underlying Assumptions

The follow financial concepts will be illustrated with a single example 168kW PV system.

5.2.3.1 Life of Investment

The "life of investment" in this context refers to two time frames. The first time frame is the power producing lifetime of a photovoltaic system. For the purposes of this analysis we assume this time to be approximately 30 years, although in an industry with only slightly more than thirty years of terrestrial experience, this number may well be higher. We have good evidence that, baring acts of God such as hurricanes, the life of a photovoltaic system install today will be at least 25 to 30 years. The confidence we have in these life expectancies is derived from two observations. The first is a case study in Beverly, Massachusetts, where a 100kW ground-mounted photovoltaic system was installed at the Beverly High School and brought on line in 1981. Despite numerous difficulties with the inverter, the modules are still producing near their original power rating. The second observation supporting this longevity claim is the warranty language

[9] This is an approximate value from a photovoltaic system integrator, reported in the summer of 2009. PV modules are commodities and prices will vary over time.

that has become standard in the industry today. Most module manufacturers warrant the power production of their products for 10 to 90% and 25 years for at least 80% of original production.

The second relevant meaning for “life of investment” refers to the term of financing of a photovoltaic project. The system owner can finance a photovoltaic installation in numerous ways. However, to simplify the understanding of the present value of such a transaction, it is easiest if the financing is considered over the useful/productive life of the system. This term of financing --30 years-- plus the interest rate on the loan, provides the necessary components to a net present value calculation.

5.2.3.2 Simple Payback

The calculation of simple payback is achieved by summing the total savings (positive) and total costs (negative) for each year. The number of years it takes for the sum to become positive is defined as the simple payback of the system. The simple payback is calculated in cell C68 of the financial analysis spreadsheet and can is also displayed graphically in the bar chart.

5.2.3.3 Internal Rate of Return (IRR)

The value or return on the PV owner’s investment in a photovoltaic system is the ratio of the price to cost brought forward to a present value. As such, the internal rate of return (IRR) can only be known if the future price of energy –over the twenty-five year life of the PV system-- is known. If, over the twenty-five year life of the system, the cost of conventional energy decreases, then the IRR for the PV system owner will also decline. If, over the twenty-five year life of the system, the cost of conventional energy increases, PV system owner’s IRR will improve. The formula for IRR is given by:

$$\mathrm{NPV} = \sum_{n=0}^{N} \frac{C_n}{(1+r)^n} = 0$$

NPV is the Net Present Value, N is the number of years, C is the cash flow, and r is the internal rate of return. The IRR represents the interest rate at which the investment could have been invested over the same period of time in order to have achieved the same financial gain as the photovoltaic system.

5.2.3.4 Underlying Assumptions

The assessment of economic of the example 168 kW system for the AWWTP is based upon the following assumptions:

1) The installed cost of the system will not exceed $5/Wp or $837,900.
2) The system will have a productive life of at least 30 years.
3) Financing will be calculated over 30 years.
4) Some form of added "green" value will be ascribed to the energy produced by the PV system. For the purposes of this analysis we will use the present rate of $30/MWh offered by Mass Energy.

5.3 Range of Project Costs & Determining Factors

The installed cost of a nominal 168 kW photovoltaic system, appropriate for the Acton WWTP, before any consideration of grants or other non-energy financial considerations, will likely cost $5.00 per Watt. Depending upon the availability of state and federal incentive programs (described in detail later) the cost to the Town of Acton could be in the range of $2.00 to $4.50 per Watt. As an example, if the installed system cost before incentives is $5/Wp or $835,000, and if the Town of Acton requests and receives a grant of $2/Wp or $334,000, then this calculation yields an installed cost to the Town of Acton of $501,000. These are, of course, hypothetical numbers. The only way to determine the true cost is by engaging in the grant application and competitive bid processes. In our example we have assumed what we believe is a very reasonable installed cost, before

incentives, of $5.00/Wp for a 168 kW system. This installed cost is used for calculations in the financial analysis spreadsheet

5.4 Impact of PV on AWWTP Electricity Energy & Demand Charges

5.4.1 AWWTP Electricity Rate B2-Large General Secondary

Presently the Acton Waste Water Treatment Plant has a B2 Large General Secondary Rate from NStar. Utility bills from NStar for energy and ConEd for delivery were provided. Combining the total monthly cost of energy and delivery from these utility bills and dividing by the total monthly energy consumed, an overall total cost of $0.142 per kWh was calculated. This value represents the average cost of energy and delivery for Acton WWTP. This value was used in the economic analysis of the system and appears in cell B20 of the financial analysis spreadsheet.

5.4.2 Net Metering

In Massachusetts the Net Metering law permits any energy in excess of what is consumed by the utility customer (net excess generation or NEG), to be carried forward on the utility's balance sheet until the next billing cycle. This allows the customer to "bank" NEG and use it at a later date at the retail rate. This is an important feature of electricity rate structures for anyone with renewable energy capacity to be aware of, however this will never apply to the Acton WWTP as the facility load will always exceed the generating capacity of any photovoltaic system that would be located there.

5.5 Federal Incentive Environment

5.5.1 Federal Clean Renewable Energy Bonds (CREBs)

Although the IRS is not currently accepting applications for CREB Allocations, CREB's may be available again in the future. The Energy Tax Incentive Act of 2005 established CREBs as a financing mechanism for public sector renewable

energy projects. CREBS are issued with a 0% interest rate and the bondholder receives federal tax credits in place of the traditional bond interest.

For more information on CREBS, contact Tina Hill at the Internal Revenue Services at 202-283-9774.

5.5.2 Tax Credits and Deductions

Presently one of the largest government incentives comes in the form of the Federal 30% Investment Tax Credit or ITC. Massachusetts offers a corporate tax deduction based upon the installed cost of photovoltaic system. The Town of Acton is not eligible for these incentives. However, there are financing models available where a third party with a tax liability can own and operate a PV system on town property, thereby utilizing these benefits, and enter into a power purchase agreement with the Town. This option will be described in detail later.

5.6 Renewable Energy Secondary Attributes Markets

There are a number of emerging markets both in the United States and in the international arena where ancillary attributes of renewable energy generation systems, such as the green house gas (GHG) equivalent that they displace, are traded. In general these features of renewable energy are referred to as the "green" components of the energy. At present this is a complex and shifting landscape and one in which smaller generators will require the expertise of a professional broker or aggregator in order to participate.

5.6.1 Renewable Energy Certificate (REC) Market

RECs represent the environmental attributes of the electricity produced from renewable energy projects. With the REC program, a green energy provider (such as a photovoltaic system owner) is credited with one REC for every 1,000 kilowatt-hours of electricity it produces. A certifying agency gives each REC a unique identification number. The green energy that is fed into the electrical grid

has an accompanying REC that can then be sold in various regional markets in which they are qualified and accepted. In New Jersey, for example, only RECs (New Jersey refers to theirs as "SRECs") created in New Jersey can participate in their market. In New England under the ISO NE/NEEPOOL system it is a more common area for large (>2MW) systems can participate directly in the market.

For small scale systems the Energy Consumers Alliance of New England (ECANE) is presently offering to purchase RECs at a fixed rate of $30 per 1,000 kilowatt-hours (one megawatt hour or MWh) for a contract period of three years for PV systems[10]. A system rated for 168kW (STC) will produce an annual AC output of approximately 208 MWh annually as calculated using PVWatts online calculator. This results in an annual income from a contract with Mass Energy of approximately $6,240. Because the value of these certificates is determined by a market there is no way to know with certainty what their future value will be.

Once every three months a PV energy production shall be reported to an assigned office. For non-residential installations, it is required to have a production meter send the system production information through the internet.

For more information on REC's, contact Kate Bogart at the Energy Consumers Alliance of New England at kate@massenergy.org.

5.6.2 Generation Information System (GIS)

The Generation Information System provides a formal mechanism for validating the production of clean energy. For each megawatt-hour of electricity generated by individual units, the NE-GIS assigns a certificate that records the attributes of the power.

[10] As a point of reference, in the spring of 2007 New Jersey SRECs were trading at an average value of $215/MWh.

The NE-GIS currently tracks almost 50 different attributes for generating units that produce power within and deliver power to the New England electricity marketplace. Key attributes include type of generation technology, date of operation, and fuel sources, as well as CO2, SOx, and NOx emissions.

These certificates are then used by electricity suppliers to differentiate their products for consumers, to provide the information required on energy disclosure labels, and to comply with state and regional RPS and emissions performance standards. Green power brokers, for example, sell products based on RECs, giving consumers the opportunity to offset purchases of electricity generated by fossil fuels and other sources.

Qualified clean energy generators must use an approved Third Party Verifier to report their production. The following is a list of approved verifiers.

Company Name	Contact Person	Phone	Email
Bill Short	William P. Short III	917-206-0001	w.shortiii@verizon.net
Coastal Electric	Peter Reed	401-849-5656	stormy02871@cox.net
Conservation Services Group	Deborah Razza	508-365-3386	deborah.razza@csgrp.com
Fat Spaniel Technologies	Leigh Zanone	408-279-5262	leigh.zanone@fatspaniel.com
Powerdash LLC	Stephen Lapointe	617-864-0770	stephen@powerdash.com
The Cadmus Group, Inc.	David Beavers	617-673-7103	dbeavers@cadmusgroup.com

5.6.3 Chicago Climate Exchange Carbon Trading

Entities with renewable energy capacity can participate in the Chicago Climate Exchange (CCX). For a Town such as Acton it would likely be the case that they would engage an “Offset Aggregator” that is a member of the CCX. Acton would be an “Offset Provider” and would register their gas (GHG) emission offsets with the Exchange through their aggregator. Because the minimum unit of carbon that can be traded on the CCX is 100 metric tons of CO_2 the Offset Aggregator works with many Offset Providers. Before offsets are issued they are approved by the CCX Offsets Committee. Once approved offsets must be verified by an

approved third-party CCX Verifier and registered in the CCX Registry. Renewable energy offset projects are issued Carbon Financial Instrument™ (CFI™) contracts at a rate of 0.4 credits (metric tons of CO_2) per Megawatt hour. For the hypothetical Acton 168kW project in central Massachusetts the simulated annual energy production is approximately 208 MWh. Using the CCX conversion for MWh to metric tons of CO_2 we calculate 82.8 credits.

As with other mechanism for trading the "green" attributes of an energy or sequestration source, once a provider has engaged in this market they are precluded from selling those green attributes in another venue. This prohibition may even extend to publicity and marketing about the facility's installation. More information can be found on:
http://www.chicagoclimatex.com/content.jsf?id=821

5.7 Power Purchase Agreements (PPA)

There is a new business model being applied to photovoltaic system project development and ownership. A handful of firms are offering third-party financing and ownership of photovoltaic systems linked to long-term (10 to 20 year) power purchase agreements. Under this arrangement, the building owner or host (energy buyer) leases the use of his or her roof or land to the developer and agrees to purchase all of the energy produced by the PV system for a predetermined term. The developer (energy seller) provides a turn-key system including all financing, design, permitting, construction and operation.

Under a PPA's there are two typical electricity purchase and sales models. The first is the "percentage of business-as-usual" (BAU) utility price model. Under this model the buyer and seller agree upon a price of energy indexed to the conventional price of electricity. This price will be some fixed value below whatever is the current price of electricity over the term of the contract. This model guarantees that the buyer will always pay less for electricity than he would

have had he purchased all his energy from the utility. In the second model the seller and buyer agree upon a starting price for energy and an escalation clause that will apply over the term of the contract. In this model the buyer is betting that the cost of conventional energy will increase faster than the rate of the escalation clause. Each model has its own risks and benefits.

It may be the case that the host is not even a candidate based upon the characteristics of his physical plant or the local state incentive environment. Typically PPA contracts require very favorable site conditions as well as good incentives. Economies of scale may require a minimum system size of at least 100KW.

There are a number of restrictions and limitations on these sorts of arrangements. The developer will, of course, be the applicant for any state or federal funding sources. The developer may also require the host to relinquish all rights to any "green tags" or renewable energy credits (REC's). The tax deductions and credits are part of what makes these models financially viable. It is through arrangements such as these that tax exempt entities can, indirectly, take advantage of these opportunities. At the end of the contract there are several options available to the parties, including renegotiation and continuation of the contract, removal of the system, or acquisition of the system by the host at fair market value. Some of the firms presently operating in this space include SunEdison, Solar Power Partners, SunPower and MMA Renewable Ventures.

5.8 Performance Specification Based Bid Solicitations

Photovoltaic modules and the systems that are assembled from them are given specific ratings for output power, open circuit voltage, and short circuit current, as well as other parameters. The most common of these ratings, the factory STC rating, is the output of the modules under standardized conditions of incident irradiance, air mass and cell temperature. Since these test conditions are not

typically present in practical applications (STC are achieved in highly controlled laboratory test settings), the expected output of a PV module or entire system may be around 85% to 90% of the manufacturer's STC rated values. Depending upon how we choose to evaluate the performance of a photovoltaic system its "rating" can vary widely and can be highly site specific. Two identical PV systems comprised of exactly the same components, but which are located at different latitudes, or which have different shading obstructions or local climate, or tilt and azimuth angles, etc., could have very different ratings and thus very different annual energy production. Because of this it is not possible to know the annual energy production of a photovoltaic system based solely on its component's nameplate ratings. The question that arises out of this for the system end user is, "How much energy will I get for my investment in this photovoltaic system?"

Until recently most solar system purchases by end users were done in the same manner –on a per Watt (Wp) basis— as integrators or contractors. While this makes sense for the contractor, because he or she is buying and selling materials, it is not an ideal business model for the end user. For most photovoltaic system purchases today the end user will purchase the hardware that constitutes the PV system, i.e. a PV *power plant*. However the buyer's true goal is to purchase as much energy as possible for his or her investment dollar.

New Energy Options, Inc.® has developed a proprietary performance specification methodology, the *max*REnergy™ bid spec, which normalizes variation in site, components, and system design specific features of competing photovoltaic system bids and permits the system buyer to optimize his or her investment. This methodology uses a two-part evaluation system that provides a defensible and transparent solicitation process. The first part provides minimum threshold performance technical criteria that result in a binary Pass/Fail

evaluation. The second part is a calculated comparative metric, in dollars per annual production ($/Wh$_{annual}$), which can be evaluated as a "low bid" criterion.

The *max*REnergy™ bid spec uses a site evaluation and "pre-engineering" process to resolve some of the more demanding design issues creating a highly constrained specification before issuing the RFP. New Energy Options works with the client to define their objectives and restrictions. In addition we make initial contact with Authority Having Jurisdiction (AHJ, local wiring inspector) and local utility to reduce uncertainties in the RFP that could result in higher risk for the bidders and higher dollar amounts in their quotes. By using the *max*REnergy™ with its combination of minimum threshold performance criteria and calculated cost/energy ratio the client is given a rigorous methodology for comparing potentially very different photovoltaic system offerings.

5.9 Hypothetical 168 kW and 15.9 kW PV System Financial Analysis

The following are three spreadsheets illustrating the financial profile of a 168 kW photovoltaic system with three different sets of assumptions. The value of secondary "green" attributes is held constant at the current price of $30/MWh. An incentive value of $0 is used in the simulation. However, should an incentive or grant be available, another value can easily be substituted and the simulation re-run. The financial analysis compares the annual benefits of the PV system to the annual costs of the system using known values (PV system size, total incentive value, REC value, discount rate), approximate values (Installed unit cost, energy production, annual PV production degradation, avoided cost of energy, annual maintenance cost, inverter replacement cost), and assumed "best guess" values (annual energy increase). Variations in the annual energy increase and the discount rate can lead to substantial change in the calculated values.

6 Acton WWTP: Two PV System Designs

6.1 Hypothetical Systems

The feasibility study will include two example designs. These designs will illustrate two photovoltaic systems that could be installed within the constraints of the physical plant at the AWWTP. The two examples will vary the system size, point of interconnection, type of PV module and inverter used. The examples will be provided here as 20% concept designs with equipment bills of materials. These examples, in the context of the preceding analysis, should provide sufficient background for the Acton engineering staff to make well informed decisions regarding the technical component of possible bid requests.

Though these designs appear as hypothetical exercises in this study, they are based upon actual system designs that have been installed, inspected and are functioning today.

6.1.1 Nominal 16 kW PV System

The first of two hypothetical photovoltaic systems that could be installed at the AWWTP is a nominal 16 kW installation. The system used an array of three strings of Sharp ND-72ERUC 72W and ND-N2ECUC 142W modules on the roof of the Operations building and four strings of 16 ND-N2ECUC 142W modules on the deck to the east. It has an STC rating of 15.918kW feeding a 15kW Solectria PVI15KW inverter with a 480V, three phase, three wire output. The interconnection is made by back feeding a 25A branch circuit breaker in either MCC1 or MCC2. Miscellaneous components are listed in the equipment schedule. A bill of material for most of the major components is listed in the equipment schedule on drawing # AWWTP-1. A typical roof layout is provided in drawing # AWWTP-2. Note that this system has a feature that is unique to Sharp

modules. The roof array has both square and triangular shaped modules that can be fit into the angular spacing on the roof. These modules are exactly one half the power rating of the standard square Sharp ND-N2ECUC 142W modules used on the remainder of the array.

Figure 13: AWWTP hypothetical 16 kW PV system 1-line drawing (following page):

Figure 14: AWWTP hypothetical 16 kW PV system 1-line drawing (following page):

ACTON 15.918kW$_{STC}$ ROOF MOUNTED PV SYSTEM

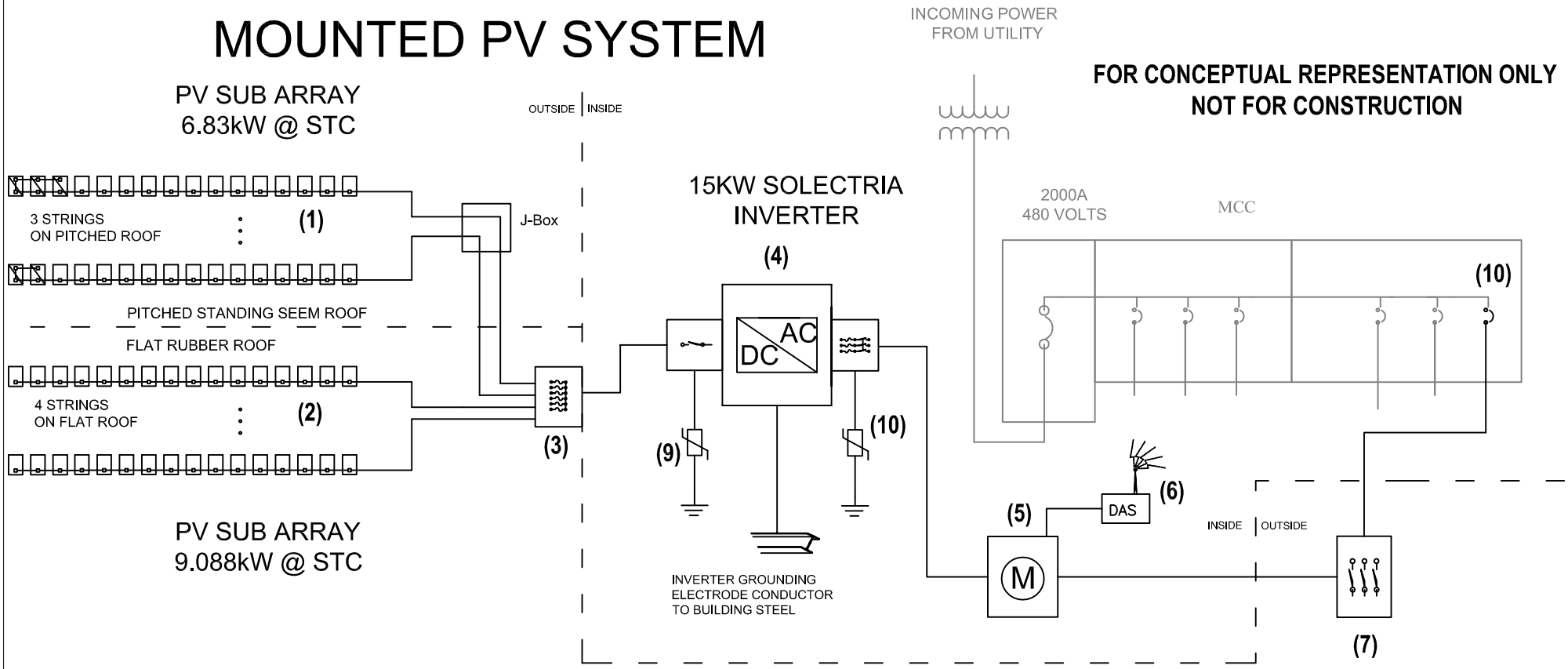

EQUIPMENT SCHEDULE

(1) PV SUB ARRAY: 2 STRINGS OF 14 SHARP 142WATT AND 4 SHARP 72 WATT (TOTAL 798) MODULES. 1 STRING OF 13 SHARP 142WATT AND 6 SHARP 72 WATT MODULES. TOTAL OF 41 SHARP 142WATT AND 14 SHARP 72 WATT MODULES).
(2) PV SUB ARRAY: 2 STRINGS OF 16 SHARP 142WATT MODULES.
(3) COMBINER BOX w/ 15 AMP FUSES, OR EQUIVALENT, TRANSITION FROM USE-2 TO THHN/THWN-2.
(4) SOLECTRIA PVI 15KW INVERTER w/ INTEGRATED DC AND AC DISCONNECTS, 3 PHASE 480 VAC.
(5) PV PRODUCTION METER, w/ PULSE INITIATOR AND 200A METER SOCKET
(6) AUTOMATED PRODUCTION TRACKING SYSTEM.
(7) 100 AMP PV SYSTEM EXTERNAL AC NEMA 3R UTILITY DISCONNECT,
(8) 3P 40A 480V CIRCUIT BREAKER AS REQUIRED BY EXISTING BUILDING PANELBOARD.
(9) DC LIGHTNING ARRESTOR.
(10) AC SURGE PROTECTION.

KEY:
PROPOSED PV SYSTEM
EXISTING EQUIPMENT
WALL PARTITIONS

NEW ENERGY OPTIONS, INC.
LITTLETON, MASSACHUSETTS

THIS DRAWING IS THE PROPERTY OF NEW ENERGY OPTIONS, INC., PRODUCED EXCLUSIVELY FOR ACTON WWTP AND MUST NOT BE USED, COPIED, REPRODUCED, OR ALTERED WITHOUT THE EXPRESSED CONSENT OF NEW ENERGY OPTIONS. © NEW ENERGY OPTIONS, INC. 2009

SIZE	DWG NO.	DWG NAME
A	AWWTP-1	ACTON WWTP 15.918 KW 1-LINE

SCALE	DATE	SHEET
NONE	NOV 18, 2009	1 of 1

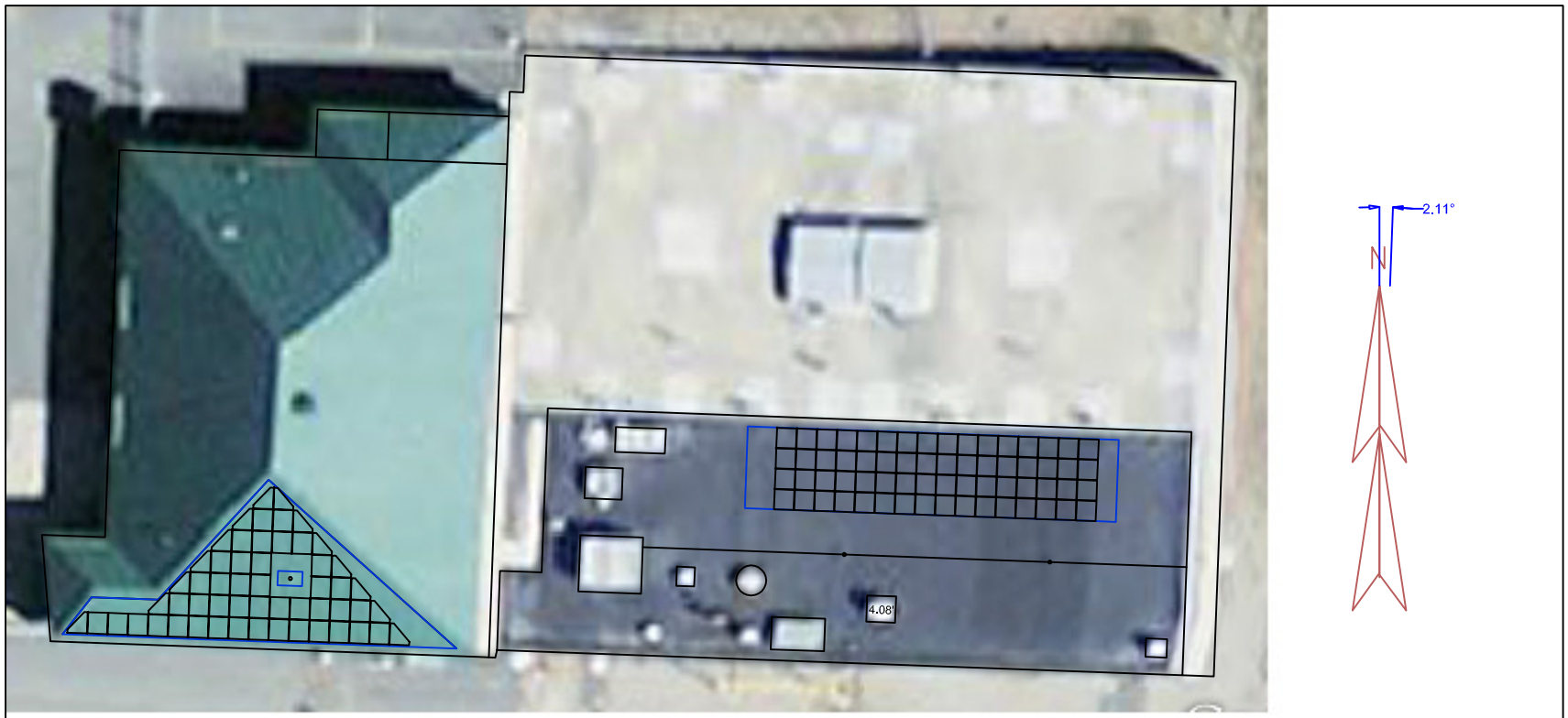

ACTON WWTP PITCHED ROOF	
DC SYSTEM SIZE	6.83 kW
ARRAY AZIMUTH	182 DEG
RACKING SYSTEM	UNIRAC SOLARMOUNT S-5! PV CLAMP
PV MODULE	SHARP 142 & SHARP 72
MODULE TILT	22.5 DEG
MODULE AREA	SQFT

ACTON WWTP FLAT ROOF	
DC SYSTEM SIZE	9.088 kW
ARRAY AZIMUTH	182 DEG
RACKING SYSTEM	UNI-RAC
PV MODULE	SHARP 142
MODULE TILT	30 DEG
MODULE AREA	SQFT

NEW ENERGY OPTIONS, INC.
LITTLETON, MASSACHUSETTS

THIS DRAWING IS THE PROPERTY OF NEW ENERGY OPTIONS, INC., PRODUCED EXCLUSIVELY FOR ACTON WWTP AND MUST NOT BE USED, COPIED, REPRODUCED, OR ALTERED WITHOUT THE EXPRESSED CONSENT OF NEW ENERGY OPTIONS. © NEW ENERGY OPTIONS, INC. 2009

SIZE	DWG NO.	DWG NAME
A	AWWTP-2	ACTON 15.918 kW SITE LAYOUT

SCALE	DATE	SHEET
NONE	NOV 18, 2009	1 of 1

6.1.2 Nominal 168 kW PV System

This nominal 168kW PV system is comprised of 798 Evergreen ES-A-210-fa3 210 Watt modules. It has an STC rating of 167.58kW. The system uses two Solectria PVI 82KW inverters, with a 480V, three-phase, three wire output. The outputs of the two inverters are combined in a 600A MLO panelboard which is then connected to the main distribution panel in the Operations building. The interconnection for this design is made to the load side of the service disconnect means.

Figure 15: AWWTP hypothetical 168 kW PV system 1-line drawing (following page):
Figure 16: AWWTP hypothetical 168 kW PV system 1-line drawing (following page):

ACTON 167.58 kW_{STC} GROUND MOUNTED PV SYSTEM

FOR CONCEPTUAL REPRESENTATION ONLY
NOT FOR CONSTRUCTION

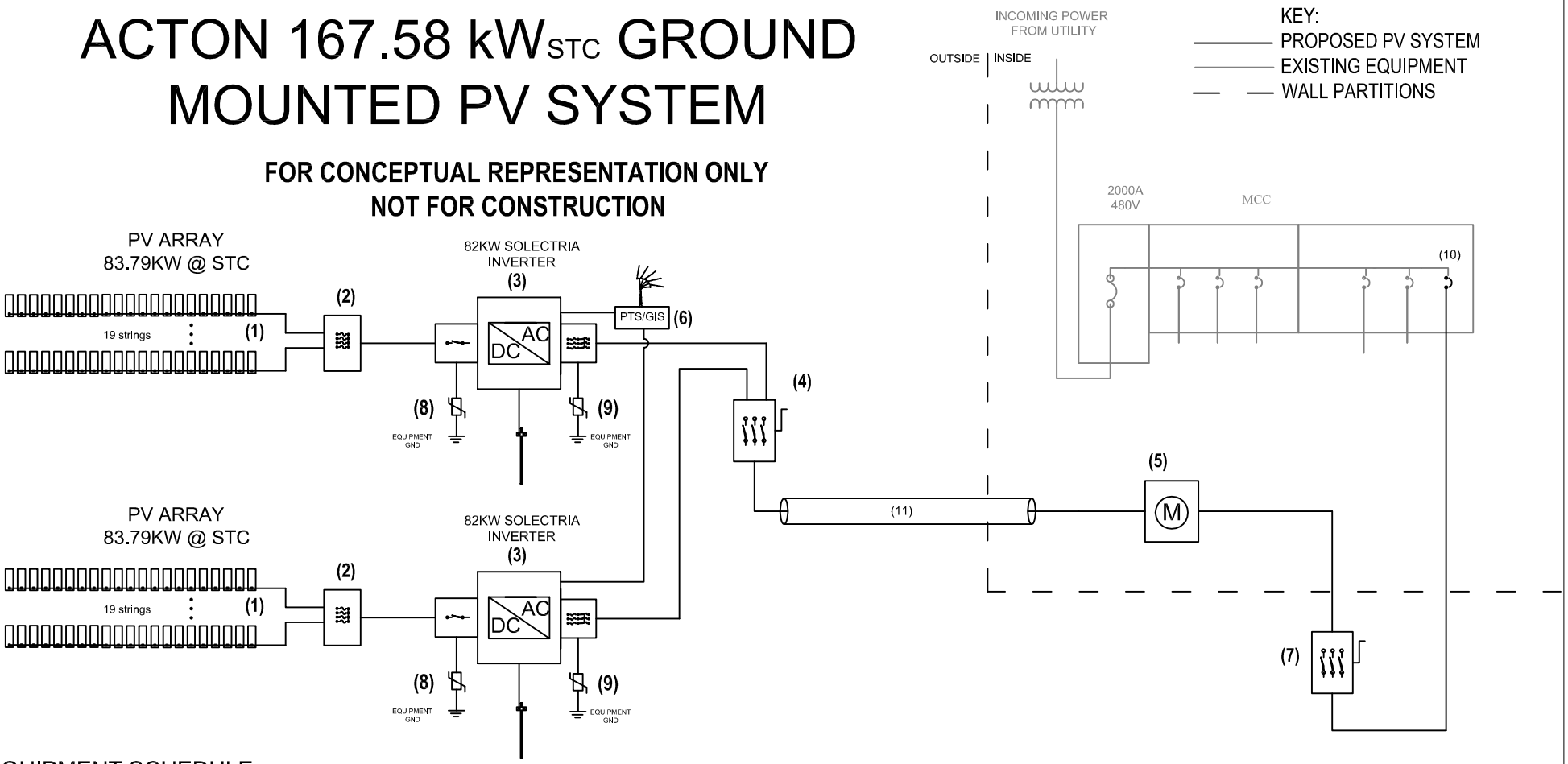

EQUIPMENT SCHEDULE

(1) PV ARRAY: 19 STRINGS OF 21 EVERGREEN ES-A-210-fa3, 210W MODULES PER INVERTER, TYP OF 2, 798 MODULES TOTAL.
(2) COMBINER BOX WITH 20 AMP FUSES, TRANSITION FROM USE-2 TO THHN/THWN-2, TYPICAL OF 2.
(3) SOLECTRIA PVI 82KW INVERTER WITH INTEGRATED DC AND AC DISCONNECTS, 3 PHASE 480 VAC, TYPICAL OF 2.
(4) 200 AMP DISCONNECT
(5) PV PRODUCTION METER, w/ PULSE INITIATOR AND 200A METER SOCKET.
(6) AUTOMATED PRODUCTION TRACKING SYSTEM.
(7) 200 AMP UTILITY DISCONNECT
(8) DC LIGHTNING ARRESTOR.
(9) AC SURGE PROTECTION.
(10) 250A 3P CIRCUIT BREAKER
AS REQUIRED BY EXISTING BUILDING PANELBOARD.
(11) EXISTING CONDUIT RUN FROM FIELD TO SWITCHGEAR

NEW ENERGY OPTIONS, INC.
LITTLETON, MASSACHUSETTS

THIS DRAWING IS THE PROPERTY OF NEW ENERGY OPTIONS, INC., PRODUCED EXCLUSIVELY FOR ACTON WWTP AND MUST NOT BE USED, COPIED, REPRODUCED, OR ALTERED WITHOUT THE EXPRESSED CONSENT OF NEW ENERGY OPTIONS. © NEW ENERGY OPTIONS, INC. 2009

SIZE	DWG NO.	DWG NAME
A	AWWTP-3	ACTON WWTP 167.58 KW 1-LINE

SCALE	DATE	SHEET
NONE	NOV 18, 2009	1 of 1

ACTON WWTP GROUND SITE	
DC SYSTEM SIZE	167.58 kW
ARRAY AZIMUTH	180 DEG
RACKING SYSTEM	UNI-RAC
PV MODULE	EVERGREEN SOLAR ES-A-210
MODULE TILT	30 DEG
MODULE AREA	12,060 SQFT
INTER-ROW SPACING	14.3 FT

NEW ENERGY OPTIONS, INC.
LITTLETON, MASSACHUSETTS

THIS DRAWING IS THE PROPERTY OF NEW ENERGY OPTIONS, INC., PRODUCED EXCLUSIVELY FOR ACTON WWTP AND MUST NOT BE USED, COPIED, REPRODUCED, OR ALTERED WITHOUT THE EXPRESSED CONSENT OF NEW ENERGY OPTIONS. © NEW ENERGY OPTIONS, INC. 2009

SIZE	DWG NO.	DWG NAME
A	AWWTP-4	ACTON 167.58 KW SITE LAYOUT

SCALE	DATE	SHEET
NONE	NOV 18, 2009	1 of 1

6.1.3 Photovoltaic Technology Comparison

In this section, photovoltaic module technologies are compared with a given array module area shown in the layout drawings. This comparison illustrates the effect of different conversion efficiencies for the cells that make up different types of modules. The basis of this comparison is the available array areas on the Operations building and on the berms of the RIBs.

The nominal array module area of the pitched roof and pitched racking system on the Acton WWTP facility of approximately 1400 sq ft has been used in the photovoltaic technology comparison. This area is of two sections. The first area is the standing seam roof which is a nominal 6.83 kW. The second area is the area of modules mounted on the racking system directly mounted to the flat roof unshaded area which is a nominal 9.088 kW. The total area of these two separate areas for photovoltaic array module mounting real estate is 129 square meters. This value has been used in the table below for comparison of the three readily available module technologies and can be viewed in the PV Technology Comparison spreadsheet.

Roof Mounted Array	**Available Area**		
Comparison of Three Technologies	**(ft^2)**	**(m^2)**	
	1389.0	**129.0**	
PV Module Characteristics			
Technology	**Monocrystalline**	**Polycrystalline**	**Amorphous Si**
Manufacturer	Sunpower	Sharp	Uni-Solar
Part Number	SPR-315E-WHT-D	ND-N2ECUC	PVL-68
Power Rating (DC Watts @ STC)	315	142	68
Module Area (m^2)	1.63	1.15	1.12
Module Efficiency (%)	0.193	0.1231	0.061
Theoretical Maximum PV System Size (kW)	24.93	15.89	7.82

Table 4: Technology comparison for roof mounted array

The table illustrates the theoretical maximum DC size of the arrays that can be installed in the available roof space. This capacity is dependent on the module

technology and its associated efficiency, and the practical limitations of different module shapes and sizes.

The ground mounted array will be mounted on a racking system with a custom tilt angle for the array. A racking system built to accommodate an array with a 30-40 degrees tilt will yield the highest annual production for our latitude. The racking systems will have an inter-row spacing of about three times the height of the array in order to eliminate shelf shading. This inter-row spacing leaves real estate unpopulated, but is essential in maximizing annual production. This type of system is shown in the ground mounted array layout drawing displayed in Figure 16.

For module technology comparison, the nominal photovoltaic array module area of the ground mounted system is the area of the modules which the racking system will accommodate. This area does not include the inter-row spacing. It only accounts for the area which photovoltaic modules will occupy. The total array module area as shown in the layout drawing is 13,480 sq ft or 1,252 square meters.

Ground Mounted Array	Available Area		
Comparison of Three Technologies	(ft^2)	(m^2)	
	13476.0	1252.0	
PV Module Characteristics			
Technology	Monocrystalline	Polycrystalline	Amorphous Si
Manufacture	Sunpower	Evergreen	Uni-Solar
Part Number	SPR-315E-WHT-D	ES-210	PVL-68
Power Rating (DC Watts @ STC)	315	210	68
Module Area (m^2)	1.63	1.57	1.12
Module Efficiency (%)	0.193	13.4	0.061
Theoretical Maximum PV System Size (kW)	241.84	167.55	75.84

Table 5: Technology comparison for ground mounted array

As shown in the table, the size of the system that can be installed on a racking system with nominal 30 degree tilt will depend upon the module technology, or module efficiency.

As a general rule of thumb, high efficiency modules will be utilized where lack of real estate or the desire for large system size has influence. A technology such as thin-film may be a candidate where space constraints are not an issue.

6.1.4 Financial Analysis of Nominal 168kW Example System

The following is a list of inputs and output for a spreadsheet analysis of the example 168kW system proposed for the AWWTP. This study includes three scenario analyses where we have used $4, $5, and $6 per Watt for the installed cost of the system. All other parameters have been held constant.

System Size
The system size is the size of the proposed photovoltaic system. If the system consists of 798 modules, and each module produces 210 Watts, then the system size is 798 x 210 which equals 167,580 Watts or 167.580 kiloWatts (kW).

Installed Unit Cost
The installed unit cost is the amount of money that will be spent on the procurement and installation of the entire photovoltaic system. The value is input in dollars per watt. If the installed unit cost is $5.00 per watt, then it will cost $5.00 for every 1 Watt of PV installed.

Total Installed Cost
The total installed cost is the product of the installed unit cost and the system size. If the system size is 167,580 Watts and the installed unit cost is $5.00 per Watt, then the total installed cost will be 167,580 x 5 which equals $837,900.

Total Incentive Value
The total incentive value is the total value of any available incentives or grants which will be applied toward the PV system.

Total Installed Cost with Incentives
The total installed cost with incentives is the total installed cost minus the total incentive value.

Energy Production in Year 1
The Energy Production in Year 1 is the amount of energy that the system is expected to produce during its first year of operation. The energy production value is taken from the PVWatts online calculator provided by the National Renewable energy Laboratory (NREL)

Annual PV Production Degradation
The annual PV production degradation is the percentage that the PV production is expected to degrade on an annual basis. All PV production degrades over time due to weathering and other effects. If the value is 0.005, or 0.5%, then the expected output of the system will produce 0.5% less output in year two than in year one.

Avoided Cost of Energy in Year 1
The avoided cost of energy is the cost of energy that is offset by the electricity produced by the PV system. It is the price that is currently being paid for electricity and transmission.

Annual Energy Increase
The annual energy increase is the anticipated increase in the price being paid for electricity and transmission. If the current cost of energy is $0.142 per kWh, then assuming a 3% annual increase, the cost of energy in year two will be $0.146 per kWh.

REC (Renewable Energy Credit) Value 2009
The REC value is the current market value of the renewable energy produced by the PV system. The current value is $30 per MWh or $0.03 per kWh.

Annual Maintenance Cost
The annual maintenance cost is the anticipated cost to maintain the PV system for one year.

Annual Maintenance Cost Adjustment
The annual maintenance cost adjustment is the anticipated annual increase in the annual maintenance cost.

Inverter Replacement Cost
The inverter replacement cost is the anticipated cost of replacing the inverter(s) after 15 years of operation.

Cummulative 25 Year Savings
The total savings of the PV system over 25 years of operation.

Simple Payback
The duration of time it takes for the cumulative annual savings to become positive. The amount of time it takes for the system to pay for itself.

Discount Rate
The rate at which money can be borrowed.

The Net Present Value (NPV)
The net present value is the value of all savings if they are brought forward to their worth in the present day. A value of money in the future will be worth less than an equal amount in the present.

The Benefits to Cost (B/C) Ratio
The benefits to cost ratio is the net present value of all savings divided by the net present value of all costs.

The Internal Rate of Return (IRR)
The internal rate of return is the interest rate at which the PV system cost could have been invested to return the same benefit as the system over 30 years.

Table 6: 30 year financial profile for nominal 168kW PV system at $4/Wp

Table 7: 30 year financial profile for nominal 168kW PV system at $5/Wp

Table 8: 30 year financial profile for nominal 168kW PV system at $6/Wp

New Energy Options Photovoltaic System Financial Analysis

(Adapted from EPA Financial Calculator ©2002 Schatz Energy Research Center)

Simple Payback, Net Present Value, Benefit-Cost Ratio and Internal Rate of Return Calculator

This spreadsheet uses simple payback (SPB) and benefit-cost (B/C) ratio functions, as well as Excel's built-in NPV (net present value) and IRR (internal rate of return) functions to calculate cost-effectiveness of energy projects based on the initial capital cost of the project and anticipated yearly savings and maintenance costs.

Photovoltaic system financial analysis assuming 30 year calculation and energy inflation rate of 0.05

167.58	System size (kW_{DCstc})
$4.00	Installed unit cost ($/$W_{DCstc}$)
$670,320.00	Total installed cost ($)
$0.00	Total incentive value ($) ← Provide grant or incentive amount
$670,320.00	Total installed cost w/incentives ($)

207662	Energy production in year 1 (kWh)
0.005	Annual PV production degradation
0.142	Avoided cost of energy year 1 ($/kWh)
0.05	Annual Energy Increase ← Provide annual energy increase rate
30.00	REC value 2009 ($/MWh)
-200.00	Annual Maintenance Cost ($)
0.03	Annual Maintenance Cost Adjustment
-$30,000.00	Inverter Replacement Cost

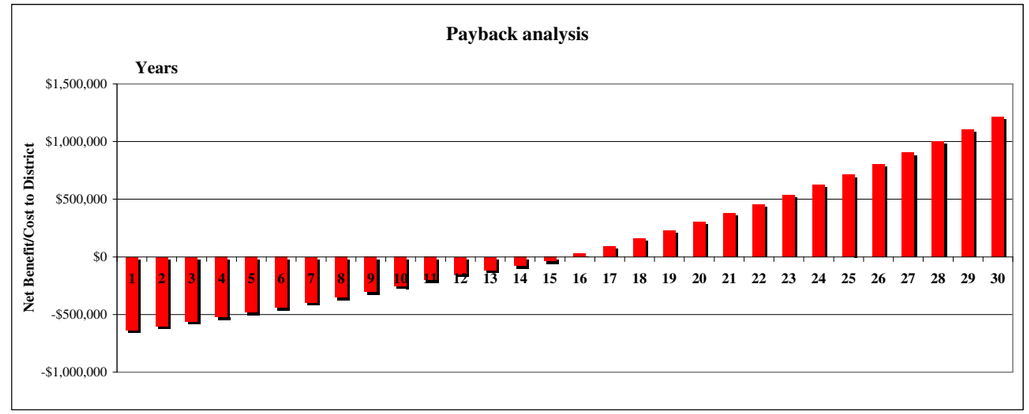

Energy Production value is taken from the PVWatts online calculator provided by the National Renewable Energy Laboratory (NREL): http://rredc.nrel.gov/solar/codes_algs/PVWATTS/version1/US/Massachusetts/Worcester.html

Renewable Energy Certificates (RECs) are only one of several financial instruments used to capture and trade the "green" attributes of PV. $30/MWh is the current price offered by one entity for Massachusetts RECs.

Year	1	2	3	4	5	6	7	8	9	10	11	12	13	14	15
Annual Energy Production with Annual Degradation of 0.005															
	207662	206624	205591	204563	203540	202522	201509	200502	199499	198502	197509	196522	195539	194562	193589
Energy Rate with Annual Increase ($/kWh) of 0.05															
	0.142	0.149	0.157	0.164	0.173	0.181	0.190	0.200	0.210	0.220	0.231	0.243	0.255	0.268	0.281
Yearly avoided energy cost savings															
	$29,488	$30,808	$32,186	$33,627	$35,131	$36,703	$38,346	$40,062	$41,855	$43,728	$45,685	$47,729	$49,865	$52,096	$54,428
Yearly REC and other RE attribute value															
	$6,230	$6,199	$6,168	$6,137	$6,106	$6,076	$6,045	$6,015	$5,985	$5,955	$5,925	$5,896	$5,866	$5,837	$5,808
Total yearly benefits of avoided cost and RE attributes															
	$35,718	$37,006	$38,354	$39,763	$41,238	$42,779	$44,391	$46,077	$47,840	$49,683	$51,610	$53,625	$55,731	$57,933	$60,235
Yearly maintenance and other recurring costs															
	-$200	-$206	-$212	-$219	-$225	-$232	-$239	-$246	-$253	-$261	-$269	-$277	-$285	-$294	-$303
Cost for inverter replacement at year 15															
	$0	$0	$0	$0	$0	$0	$0	$0	$0	$0	$0	$0	-$10,000	-$10,000	-$10,000
Total yearly cost of yearly maintenance and inverter															
	-$200	-$206	-$212	-$219	-$225	-$232	-$239	-$246	-$253	-$261	-$269	-$277	-$10,285	-$10,294	-$10,303
Initial Invenstment **Individual Yearly Gain (benefits minus maintenance and other recurring costs)**															
-$670,320	$35,518	$36,800	$38,142	$39,545	$41,012	$42,547	$44,152	$45,831	$47,586	$49,422	$51,341	$53,348	$45,446	$47,639	$49,933
Cummulative Yearly Gain															
	$35,518	$72,318	$110,460	$150,005	$191,017	$233,565	$277,717	$323,548	$371,134	$420,556	$471,897	$525,245	$570,691	$618,330	$668,263
Cummulative Yearly Costs															
	-$670,520	-$670,726	-$670,938	-$671,157	-$671,382	-$671,614	-$671,852	-$672,098	-$672,352	-$672,613	-$672,882	-$673,158	-$683,444	-$693,737	-$704,040
Simple Payback															
	-$635,002	-$598,408	-$560,478	-$521,152	-$480,365	-$438,049	-$394,135	-$348,550	-$301,217	-$252,057	-$200,984	-$147,913	-$112,753	-$75,407	-$35,777
SPB Calculator															
Cummulative Yearly Benefit/Cost															
	0.05	0.11	0.16	0.22	0.28	0.35	0.41	0.48	0.55	0.63	0.70	0.78	0.84	0.89	0.95

Year	16	17	18	19	20	21	22	23	24	25	26	27	28	29	30
Annual Energy Production with Annual Degradation of 0.005															
	192621	191658	190699	189746	188797	187853	186914	185979	185049	184124	183204	182288	181376	180469	179567
Energy Rate with Annual Increase ($/kWh) of 0.05															
	0.295	0.310	0.325	0.342	0.359	0.377	0.396	0.415	0.436	0.458	0.481	0.505	0.530	0.557	0.584
Yearly avoided energy cost savings															
	$56,863	$59,408	$62,066	$64,844	$67,746	$70,777	$73,944	$77,253	$80,711	$84,322	$88,096	$92,038	$96,157	$100,460	$104,955
Yearly REC and other RE attribute value															
	$5,779	$5,750	$5,721	$5,692	$5,664	$5,636	$5,607	$5,579	$5,551	$5,524	$5,496	$5,469	$5,441	$5,414	$5,387
Total yearly benefits of avoided cost and RE attributes															
	$62,642	$65,158	$67,787	$70,536	$73,409	$76,413	$79,552	$82,833	$86,262	$89,846	$93,592	$97,507	$101,598	$105,874	$110,342
Yearly maintenance and other recurring costs															
	-$312	-$321	-$331	-$340	-$351	-$361	-$372	-$383	-$395	-$407	-$419	-$431	-$444	-$458	-$471
Cost for inverter replacement at year 15															
	$0	$0	$0	$0	$0	$0	$0	$0	$0	$0	$0	$0	$0	$0	$0
Total yearly cost of yearly maintenance and inverter															
	-$312	-$321	-$331	-$340	-$351	-$361	-$372	-$383	-$395	-$407	-$419	-$431	-$444	-$458	-$471
Initial Invenstment **Individual Yearly Gain (benefits minus maintenance and other recurring costs)**															
-$670,320	$62,330	$64,837	$67,457	$70,196	$73,059	$76,052	$79,180	$82,450	$85,867	$89,439	$93,173	$97,075	$101,154	$105,416	$109,871
Cummulative Yearly Gain															
	$730,593	$795,430	$862,886	$933,082	$1,006,141	$1,082,192	$1,161,372	$1,243,822	$1,329,689	$1,419,128	$1,512,301	$1,609,377	$1,710,531	$1,815,947	$1,925,818
Cummulative Yearly Costs															
	-$704,351	-$704,672	-$705,003	-$705,343	-$705,694	-$706,055	-$706,427	-$706,811	-$707,205	-$707,612	-$708,031	-$708,462	-$708,906	-$709,364	-$709,835
Simple Payback															
	$26,242	$90,757	$157,883	$227,739	$300,447	$376,137	$454,945	$537,011	$622,484	$711,516	$804,271	$900,915	$1,001,624	$1,106,583	$1,215,983
SPB Calculator															
	15.58	16.22	17.37	18.41	19.43	20.44	21.45	22.46	23.46	24.47	25.47	26.47	27.47	28.48	29.48
Cummulative Yearly Benefit/Cost															
	1.04	1.13	1.22	1.32	1.43	1.53	1.64	1.76	1.88	2.01	2.14	2.27	2.41	2.56	2.71

Parameter	Value	Explanation
Cum. 30-Yr. Savings	$1,925,818	just adds up total savings
SPB*	15.58 years	simple payback = capital cost/net yearly savings
Discount Rate	2.00%	rate used to calculate time value of money ← Provide discount rate value
NPV	$685,422	net present value of all costs and savings
B/C Ratio	1.98	ratio of net present value of all savings to net present value of all costs
IRR	6.83%	discount rate required for NPV of savings to exactly cancel out cost

*SPB based on *average* yearly savings over 30-year period

For similar spreadsheet tools see either:

http://www.cleanaircounts.org/Resource%20Package/A%20Book/EStar%20Buildings/buildings%20manual/business.pdf

www.mtpc.org/cleanenergy/cando/SimpleNon-ResidentialSolarFinanceModel-082407.xls

New Energy Options Photovoltaic System Financial Analysis

(Adapted from EPA Financial Calculator ©2002 Schatz Energy Research Center)

Simple Payback, Net Present Value, Benefit-Cost Ratio and Internal Rate of Return Calculator

This spreadsheet uses simple payback (SPB) and benefit-cost (B/C) ratio functions, as well as Excel's built-in NPV (net present value) and IRR (internal rate of return) functions to calculate cost-effectiveness of energy projects based on the initial capital cost of the project and anticipated yearly savings and maintenance costs.

Photovoltaic system financial analysis assuming 30 year calculation and energy inflation rate of 0.05

167.58	System size (kW_{DCstc})
$5.00	Installed unit cost ($/$W_{DCstc}$)
$837,900.00	Total installed cost ($)
$0.00	Total incentive value ($) ← Provide grant or incentive amount
$837,900.00	Total installed cost w/incentives ($)

207662	Energy production in year 1 (kWh)
0.005	Annual PV production degradation
0.142	Avoided cost of energy year 1 ($/kWh)
0.05	Annual Energy Increase ← Provide annual energy increase rate
30.00	REC value 2009 ($/MWh)
-200.00	Annual Maintenance Cost ($)
0.03	Annual Maintenance Cost Adjustment
-$30,000.00	Inverter Replacement Cost

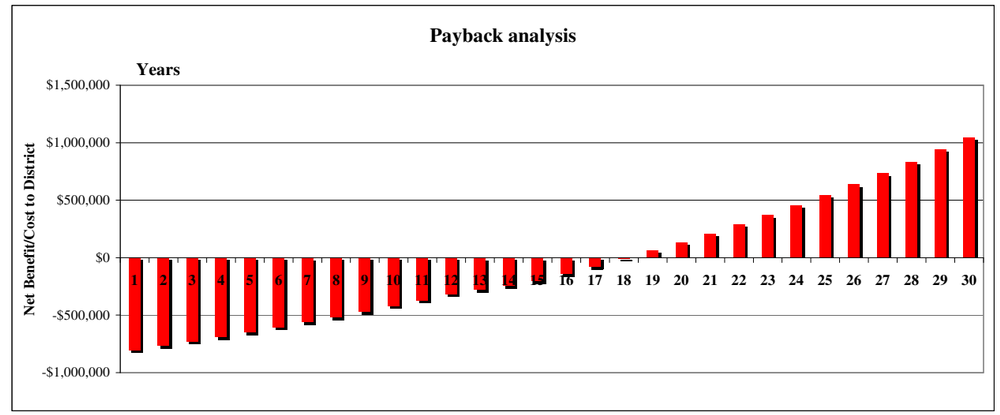

Energy Production value is taken from the PVWatts online calculator provided by the National Renewable Energy Laboratory (NREL): http://rredc.nrel.gov/solar/codes_algs/PVWATTS/version1/US/Massachusetts/Worcester.html

Renewable Energy Certificates (RECs) are only one of several financial instruments used to capture and trade the "green" attributes of PV. $30/MWh is the current price offered by one entity for Massachusetts RECs.

Year	1	2	3	4	5	6	7	8	9	10	11	12	13	14	15
Annual Energy Production with Annual Degradation of 0.005															
	207662	206624	205591	204563	203540	202522	201509	200502	199499	198502	197509	196522	195539	194562	193589
Energy Rate with Annual Increase ($/kWh) of 0.05															
	0.142	0.149	0.157	0.164	0.173	0.181	0.190	0.200	0.210	0.220	0.231	0.243	0.255	0.268	0.281
Yearly avoided energy cost savings															
	$29,488	$30,808	$32,186	$33,627	$35,131	$36,703	$38,346	$40,062	$41,855	$43,728	$45,685	$47,729	$49,865	$52,096	$54,428
Yearly REC and other RE attribute value															
	$6,230	$6,199	$6,168	$6,137	$6,106	$6,076	$6,045	$6,015	$5,985	$5,955	$5,925	$5,896	$5,866	$5,837	$5,808
Total yearly benefits of avoided cost and RE attributes															
	$35,718	$37,006	$38,354	$39,763	$41,238	$42,779	$44,391	$46,077	$47,840	$49,683	$51,610	$53,625	$55,731	$57,933	$60,235
Yearly maintenance and other recurring costs															
	-$200	-$206	-$212	-$219	-$225	-$232	-$239	-$246	-$253	-$261	-$269	-$277	-$285	-$294	-$303
Cost for inverter replacement at year 15															
	$0	$0	$0	$0	$0	$0	$0	$0	$0	$0	$0	$0	-$10,000	-$10,000	-$10,000
Total yearly cost of yearly maintenance and inverter															
	-$200	-$206	-$212	-$219	-$225	-$232	-$239	-$246	-$253	-$261	-$269	-$277	-$10,285	-$10,294	-$10,303
Initial Invenstment **Individual Yearly Gain (benefits minus maintenance and other recurring costs)**															
-$837,900	$35,518	$36,800	$38,142	$39,545	$41,012	$42,547	$44,152	$45,831	$47,586	$49,422	$51,341	$53,348	$45,446	$47,639	$49,933
Cummulative Yearly Gain															
	$35,518	$72,318	$110,460	$150,005	$191,017	$233,565	$277,717	$323,548	$371,134	$420,556	$471,897	$525,245	$570,691	$618,330	$668,263
Cummulative Yearly Costs															
	-$838,100	-$838,306	-$838,518	-$838,737	-$838,962	-$839,194	-$839,432	-$839,678	-$839,932	-$840,193	-$840,462	-$840,738	-$851,024	-$861,317	-$871,620
Simple Payback															
	-$802,582	-$765,988	-$728,058	-$688,732	-$647,945	-$605,629	-$561,715	-$516,130	-$468,797	-$419,637	-$368,564	-$315,493	-$280,333	-$242,987	-$203,357
SPB Calculator															
Cummulative Yearly Benefit/Cost															
	0.04	0.09	0.13	0.18	0.23	0.28	0.33	0.39	0.44	0.50	0.56	0.62	0.67	0.72	0.77

Year	16	17	18	19	20	21	22	23	24	25	26	27	28	29	30
Annual Energy Production with Annual Degradation of 0.005															
	192621	191658	190699	189746	188797	187853	186914	185979	185049	184124	183204	182288	181376	180469	179567
Energy Rate with Annual Increase ($/kWh) of 0.05															
	0.295	0.310	0.325	0.342	0.359	0.377	0.396	0.415	0.436	0.458	0.481	0.505	0.530	0.557	0.584
Yearly avoided energy cost savings															
	$56,863	$59,408	$62,066	$64,844	$67,746	$70,777	$73,944	$77,253	$80,711	$84,322	$88,096	$92,038	$96,157	$100,460	$104,955
Yearly REC and other RE attribute value															
	$5,779	$5,750	$5,721	$5,692	$5,664	$5,636	$5,607	$5,579	$5,551	$5,524	$5,496	$5,469	$5,441	$5,414	$5,387
Total yearly benefits of avoided cost and RE attributes															
	$62,642	$65,158	$67,787	$70,536	$73,409	$76,413	$79,552	$82,833	$86,262	$89,846	$93,592	$97,507	$101,598	$105,874	$110,342
Yearly maintenance and other recurring costs															
	-$312	-$321	-$331	-$340	-$351	-$361	-$372	-$383	-$395	-$407	-$419	-$431	-$444	-$458	-$471
Cost for inverter replacement at year 15															
	$0	$0	$0	$0	$0	$0	$0	$0	$0	$0	$0	$0	$0	$0	$0
Total yearly cost of yearly maintenance and inverter															
	-$312	-$321	-$331	-$340	-$351	-$361	-$372	-$383	-$395	-$407	-$419	-$431	-$444	-$458	-$471
Individual Yearly Gain (benefits minus maintenance and other recurring costs)															
	$62,330	$64,837	$67,457	$70,196	$73,059	$76,052	$79,180	$82,450	$85,867	$89,439	$93,173	$97,075	$101,154	$105,416	$109,871
Cummulative Yearly Gain															
	$730,593	$795,430	$862,886	$933,082	$1,006,141	$1,082,192	$1,161,372	$1,243,822	$1,329,689	$1,419,128	$1,512,301	$1,609,377	$1,710,531	$1,815,947	$1,925,818
Cummulative Yearly Costs															
	-$871,931	-$872,252	-$872,583	-$872,923	-$873,274	-$873,635	-$874,007	-$874,391	-$874,785	-$875,192	-$875,611	-$876,042	-$876,486	-$876,944	-$877,415
Simple Payback															
	-$141,338	-$76,823	-$9,697	$60,159	$132,867	$208,557	$287,365	$369,431	$454,904	$543,936	$636,691	$733,335	$834,044	$939,003	$1,048,403
SPB Calculator															
				18.14	19.31	20.39	21.42	22.44	23.45	24.46	25.46	26.46	27.47	28.47	29.47
Cummulative Yearly Benefit/Cost															
	0.84	0.91	0.99	1.07	1.15	1.24	1.33	1.42	1.52	1.62	1.73	1.84	1.95	2.07	2.19

Parameter	Value	Explanation
Cum. 30-Yr. Savings	$1,925,818	just adds up total savings
SPB*	18.14 years	simple payback = capital cost/net yearly savings
Discount Rate	2.00%	rate used to calculate time value of money ← Provide discount rate value
NPV	$517,842	net present value of all costs and savings
B/C Ratio	1.60	ratio of net present value of all savings to net present value of all costs
IRR	5.15%	discount rate required for NPV of savings to exactly cancel out cost

*SPB based on average yearly savings over 30-year period

For similar spreadsheet tools see either:

http://www.cleanaircounts.org/Resource%20Package/A%20Book/EStar%20Buildings/buildings%20manual/business.pdf

www.mtpc.org/cleanenergy/cando/SimpleNon-ResidentialSolarFinanceModel-082407.xls

New Energy Options Photovoltaic System Financial Analysis

(Adapted from EPA Financial Calculator ©2002 Schatz Energy Research Center)

Simple Payback, Net Present Value, Benefit-Cost Ratio and Internal Rate of Return Calculator

This spreadsheet uses simple payback (SPB) and benefit-cost (B/C) ratio functions, as well as Excel's built-in NPV (net present value) and IRR (internal rate of return) functions to calculate cost-effectiveness of energy projects based on the initial capital cost of the project and anticipated yearly savings and maintenance costs.

Photovoltaic system financial analysis assuming 30 year calculation and energy inflation rate of 0.05

167.58	System size (kW_{DCstc})
$6.00	Installed unit cost ($/$W_{DCstc}$)
$1,005,480.00	Total installed cost ($)
$0.00	Total incentive value ($) ← Provide grant or incentive amount
$1,005,480.00	Total installed cost w/incentives ($)

207662	Energy production in year 1 (kWh)
0.005	Annual PV production degradation
0.142	Avoided cost of energy year 1 ($/kWh)
0.05	Annual Energy Increase ← Provide annual energy increase rate
30.00	REC value 2009 ($/MWh)
-200.00	Annual Maintenance Cost ($)
0.03	Annual Maintenance Cost Adjustment
-$30,000.00	Inverter Replacement Cost

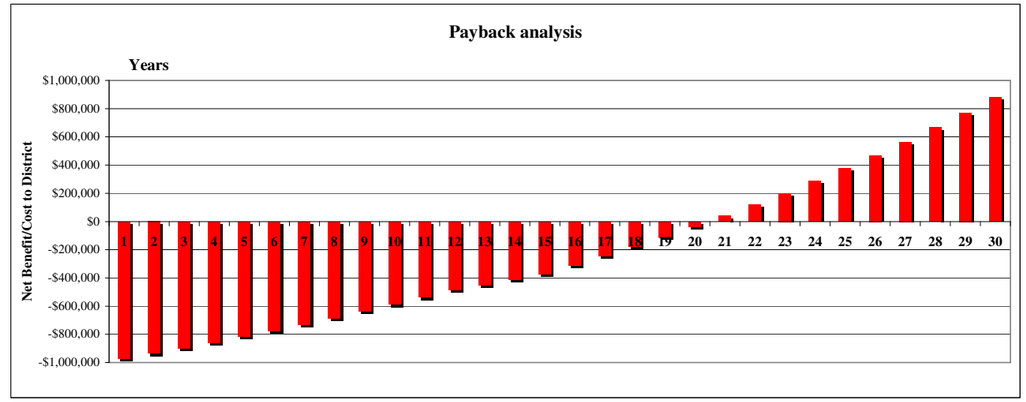

Energy Production value is taken from the PVWatts online calculator provided by the National Renewable Energy Laboratory (NREL): http://rredc.nrel.gov/solar/codes_algs/PVWATTS/version1/US/Massachusetts/Worcester.html

Renewable Energy Certificates (RECs) are only one of several financial instruments used to capture and trade the "green" attributes of PV. $30/MWh is the current price offered by one entity for Massachusetts RECs.

Year	1	2	3	4	5	6	7	8	9	10	11	12	13	14	15
Annual Energy Production with Annual Degradation of 0.005															
	207662	206624	205591	204563	203540	202522	201509	200502	199499	198502	197509	196522	195539	194562	193589
Energy Rate with Annual Increase ($/kWh) of 0.05															
	0.142	0.149	0.157	0.164	0.173	0.181	0.190	0.200	0.210	0.220	0.231	0.243	0.255	0.268	0.281
Yearly avoided energy cost savings															
	$29,488	$30,808	$32,186	$33,627	$35,131	$36,703	$38,346	$40,062	$41,855	$43,728	$45,685	$47,729	$49,865	$52,096	$54,428
Yearly REC and other RE attribute value															
	$6,230	$6,199	$6,168	$6,137	$6,106	$6,076	$6,045	$6,015	$5,985	$5,955	$5,925	$5,896	$5,866	$5,837	$5,808
Total yearly benefits of avoided cost and RE attributes															
	$35,718	$37,006	$38,354	$39,763	$41,238	$42,779	$44,391	$46,077	$47,840	$49,683	$51,610	$53,625	$55,731	$57,933	$60,235
Yearly maintenance and other recurring costs															
	-$200	-$206	-$212	-$219	-$225	-$232	-$239	-$246	-$253	-$261	-$269	-$277	-$285	-$294	-$303
Cost for inverter replacement at year 15															
	$0	$0	$0	$0	$0	$0	$0	$0	$0	$0	$0	$0	-$10,000	-$10,000	-$10,000
Total yearly cost of yearly maintenance and inverter															
	-$200	-$206	-$212	-$219	-$225	-$232	-$239	-$246	-$253	-$261	-$269	-$277	-$10,285	-$10,294	-$10,303
Initial Invenstment **Individual Yearly Gain (benefits minus maintenance and other recurring costs)**															
-$1,005,480	$35,518	$36,800	$38,142	$39,545	$41,012	$42,547	$44,152	$45,831	$47,586	$49,422	$51,341	$53,348	$45,446	$47,639	$49,933
Cummulative Yearly Gain															
	$35,518	$72,318	$110,460	$150,005	$191,017	$233,565	$277,717	$323,548	$371,134	$420,556	$471,897	$525,245	$570,691	$618,330	$668,263
Cummulative Yearly Costs															
	-$1,005,680	-$1,005,886	-$1,006,098	-$1,006,317	-$1,006,542	-$1,006,774	-$1,007,012	-$1,007,258	-$1,007,512	-$1,007,773	-$1,008,042	-$1,008,318	-$1,018,604	-$1,028,897	-$1,039,200
Simple Payback															
	-$970,162	-$933,568	-$895,638	-$856,312	-$815,525	-$773,209	-$729,295	-$683,710	-$636,377	-$587,217	-$536,144	-$483,073	-$447,913	-$410,567	-$370,937
SPB Calculator															
Cummulative Yearly Benefit/Cost															
	0.04	0.07	0.11	0.15	0.19	0.23	0.28	0.32	0.37	0.42	0.47	0.52	0.56	0.60	0.64

Year	16	17	18	19	20	21	22	23	24	25	26	27	28	29	30
Annual Energy Production with Annual Degradation of 0.005															
	192621	191658	190699	189746	188797	187853	186914	185979	185049	184124	183204	182288	181376	180469	179567
Energy Rate with Annual Increase ($/kWh) of 0.05															
	0.295	0.310	0.325	0.342	0.359	0.377	0.396	0.415	0.436	0.458	0.481	0.505	0.530	0.557	0.584
Yearly avoided energy cost savings															
	$56,863	$59,408	$62,066	$64,844	$67,746	$70,777	$73,944	$77,253	$80,711	$84,322	$88,096	$92,038	$96,157	$100,460	$104,955
Yearly REC and other RE attribute value															
	$5,779	$5,750	$5,721	$5,692	$5,664	$5,636	$5,607	$5,579	$5,551	$5,524	$5,496	$5,469	$5,441	$5,414	$5,387
Total yearly benefits of avoided cost and RE attributes															
	$62,642	$65,158	$67,787	$70,536	$73,409	$76,413	$79,552	$82,833	$86,262	$89,846	$93,592	$97,507	$101,598	$105,874	$110,342
Yearly maintenance and other recurring costs															
	-$312	-$321	-$331	-$340	-$351	-$361	-$372	-$383	-$395	-$407	-$419	-$431	-$444	-$458	-$471
Cost for inverter replacement at year 15															
	$0	$0	$0	$0	$0	$0	$0	$0	$0	$0	$0	$0	$0	$0	$0
Total yearly cost of yearly maintenance and inverter															
	-$312	-$321	-$331	-$340	-$351	-$361	-$372	-$383	-$395	-$407	-$419	-$431	-$444	-$458	-$471
Initial Invenstment **Individual Yearly Gain (benefits minus maintenance and other recurring costs)**															
-$1,005,480	$62,330	$64,837	$67,457	$70,196	$73,059	$76,052	$79,180	$82,450	$85,867	$89,439	$93,173	$97,075	$101,154	$105,416	$109,871
Cummulative Yearly Gain															
	$730,593	$795,430	$862,886	$933,082	$1,006,141	$1,082,192	$1,161,372	$1,243,822	$1,329,689	$1,419,128	$1,512,301	$1,609,377	$1,710,531	$1,815,947	$1,925,818
Cummulative Yearly Costs															
	-$1,039,511	-$1,039,832	-$1,040,163	-$1,040,503	-$1,040,854	-$1,041,215	-$1,041,587	-$1,041,971	-$1,042,365	-$1,042,772	-$1,043,191	-$1,043,622	-$1,044,066	-$1,044,524	-$1,044,995
Simple Payback															
	-$308,918	-$244,403	-$177,277	-$107,421	-$34,713	$40,977	$119,785	$201,851	$287,324	$376,356	$469,111	$565,755	$666,464	$771,423	$880,823
SPB Calculator															
						20.46	21.25	22.37	23.41	24.43	25.45	26.45	27.46	28.46	29.47
Cummulative Yearly Benefit/Cost															
	0.70	0.76	0.83	0.90	0.97	1.04	1.12	1.19	1.28	1.36	1.45	1.54	1.64	1.74	1.84

Parameter	Value	Explanation
Cum. 30-Yr. Savings	$1,925,818	just adds up total savings
SPB*	20.46 years	simple payback = capital cost/net yearly savings
Discount Rate	2.00%	rate used to calculate time value of money ← Provide discount rate value
NPV	$350,262	net present value of all costs and savings
B/C Ratio	1.34	ratio of net present value of all savings to net present value of all costs
IRR	3.89%	discount rate required for NPV of savings to exactly cancel out cost

*SPB based on average yearly savings over 30-year period

For similar spreadsheet tools see either:

http://www.cleanaircounts.org/Resource%20Package/A%20Book/EStar%20Buildings/buildings%20manual/business.pdf

www.mtpc.org/cleanenergy/cando/SimpleNon-ResidentialSolarFinanceModel-082407.xls

7 Conclusions & Recommendations

7.1 Conclusions

The Acton Waste Water Treatment Plant has at least two areas that could accommodate photovoltaic installations. The simplest, lowest installed-cost site is the roof of the Operations building however the capacity of such an installation would be very small due to the limited roof space. Alternatively, the berms between the Rapid Infiltration Beds provide a reasonable alternative for a much larger system. The maximum capacity that the RIB could hold would be approximately 240kW$_{STC}$.

A preliminary economic analysis indicates that, depending upon a range of variables and assumptions, a financial case can be made for installing a photovoltaic system in the optimal, lowest-cost application. An option may exist to procure one of the kinds of systems described in this study with no capital outlay through a third-party financing and ownership power purchase agreement (PPA). Much of this analysis depends upon factors that are outside of the control of the Town of Acton, such as the specifics of the current federal energy legislation, the details of the next round of MTC funding, the market price for RECs, and the cost of conventional electrical energy over the 25 to 30 year life of the proposed photovoltaic system.

The key message that this study hopes to convey, beyond the basic conclusion regarding the feasibility of one or two hypothetical PV systems, is that with the engineering and financial tools provided to the town in this study can be used to analyze the technical merits, as well as the financial benefits and costs, of photovoltaic technology as it applies to Acton's unique situation.

7.2 Recommendations

We recommend that the Town of Acton:

● Solicit presentations/proposals for the nominal 168kW system from companies that offer third-party ownership and power purchase agreements.

● Solicit bid proposals for the nominal 168kW system from companies that offer turn-key photovoltaic installation services.

● Solicit presentations/proposals from companies that offer aggregation services aimed at capturing the value of secondary “green” energy attributes.

After Acton has gathered the above data from bidders New Energy Options will conduct up to six additional spreadsheet analyses based upon bid results and whatever assumptions are provided by the Town of Acton or its representative.

Should Acton choose to investigate these issues further New Energy Options can assist with all of the items listed above. In addition New Energy Options can provide the following services:

● PV System Performance Specification for solicitation of competitive bids

● Technical Presentation to Engineering/Management Team

● Training courses for municipal planners, engineers, managers and maintenance staff

● Assess the solar resource and PV system applicability for other town sites and facilities.

8 Appendix 1: Module & Inverter Specifications

8.1 Evergreen Solar ES-A-210 210 Watt Photovoltaic Module
8.2 Solectria PVI-82 82 kW Photovoltaic Inverter
8.3 Sharp Solar ND-72ERUC/ND-72ELUC 72 Watt Photovoltaic Module
8.4 Sharp Solar ND-N2ECUC 144 Watt Photovoltaic Module
8.5 Solectria PVI-15 15 kW Photovoltaic Inverter

ES-A SERIES
photovoltaic panels

200, 205 & 210 W

evergreensolar®

Made in the USA

MORE electricity

Our ES-A series panels have the best power tolerance in the industry (-0/+5 W) and consistently deliver more electricity than competitors in field tests.

GUARANTEED POWER[1]
The minimum guaranteed power is the nameplate so you never get less power than you paid for.

INDEPENDENTLY VERIFIED POWER[2]
Four independent test labs regularly check panel power so you get the power we promise.

ANTI-REFLECTIVE GLASS
Delivering 2–3% more electricity compared to panels with standard glass.

TEMPERATURE RATINGS OVER 90%[3]
Maintaining up to 4% higher output than most other crystalline silicon panels under hot conditions.

HIGH RANKINGS IN FIELD TESTS[4]
Long-term Photon and TÜV field tests prove Evergreen panels produce more electricity (kWh/kW).

LESS impact

String Ribbon™ panels have the smallest carbon footprint and fastest energy payback of any silicon-based solar panel ever made.

SMALLEST CARBON FOOTPRINT[5]
Our String Ribbon™ wafers are made with a fraction of the emissions that result from making conventional silicon panels.

12-MONTH ENERGY PAYBACK[5]
Our panels begin generating truly clean electricity faster than any other silicon-based panel on the market.

100% CARDBOARD-FREE REUSABLE PACKAGING
Reduces disposal costs and on-site manpower while eliminating tons of landfill.

LEAD-FREE SOLAR CELLS
Our panels make clean electricity and the way we make them is clean too.

1 Guaranteed upon initial delivery of the panel to the customer, maximum power up to 4.99 W above nameplate rating; **2** Evergreen power testers calibrated by taking the straight average of test data from NREL, TÜV Rheinland PTL, TÜV Rheinland Cologne and Fraunhofer ISE; **3** Based on comparing PTC/STC ratings of major competing multi-crystalline silicon panel brands published by the California Energy Commission in May 2009; **4** 2008 Module Tests conducted by Photon and published in Photon International February 2009, TÜV Rheinland tests run from April to September 2008

5 Evaluation completed by the Energy Research Foundation of the Netherlands (ECN), May 2009

STRING RIBBON™ SOLAR PANELS OFFERING EXCEPTIONAL PERFORMANCE AND INDUSTRY-LEADING ENVIRONMENTAL CREDENTIALS. IN SHORT, MORE ELECTRICITY AND LESS IMPACT.

*All Evergreen panels come with a 5 year workmanship and 25 year limited power warranty. For full details see the **Evergreen Solar Limited Warranty** available upon request or online. This product is certified to UL 1703, UL 4703, UL Fire Safety Class C, IEC 61215 Ed.2, IEC 61730 Class A, FSEC and KTL standards. **String Ribbon** is a trademark of Evergreen Solar, Inc. Evergreen Solar's wafer manufacturing technology is patented in the United States and other countries.* *Copyright © Evergreen Solar, Inc 2009.*

www.tuv.com TÜVRheinland ID: 000022201

CE IEC

INTERTEK ETL LISTED C US

ELECTRICAL characteristics

Standard Test Conditions (STC)[1]

	ES-A-200 -fa3*	ES-A-205 -fa3*	ES-A-210 -fa3*	
P_{mp}[2]	200	205	210	W
$P_{tolerance}$	-0/+4.99 (-0/+2.5)	-0/+4.99 (-0/+2.5)	-0/+4.99 (-0/+2.5)	W (%)
$P_{mp, max}$	204.99	209.99	214.99	W
$P_{mp, min}$	200.00	205.00	210.00	W
P_{ptc}[3]	180.6	185.2	189.8	W
η_{min}	12.7	13.1	13.4	%
V_{mp}	18.1	18.2	18.3	V
I_{mp}	11.05	11.27	11.48	A
V_{oc}	22.6	22.7	22.8	V
I_{sc}	11.80	11.93	12.11	A

Nominal Operating Cell Temperature Conditions (NOCT)[4]

T_{NOCT}	45.4	45.4	45.4	°C
P_{max}	146.4	150.1	153.8	W
V_{mp}	16.5	16.6	16.7	V
I_{mp}	8.87	9.04	9.21	A
V_{oc}	20.8	21.0	21.1	V
I_{sc}	9.44	9.57	9.76	A

Low Irradiance

The typical relative reduction of panel efficiency at an irradiance of 200 W/m² both at 25°C cell temperature and spectrum AM 1.5 is 0%.

Temperature Coefficients

γP_{mp}	-0.43	%/°C
βV_{mp}	-0.40	%/°C
αI_{mp}	-0.03	%/°C
βV_{oc}	-0.31	%/°C
αI_{sc}	+0.05	%/°C

System Design

Series Fuse Rating	20 A
Maximum DC System Voltage (UL)	600 V
Maximum Combined Wind and Snow Load[5]	60 lbs/ft²

*1 1000 W/m², 25°C cell temperature, AM 1.5 spectrum; 2 Maximum power point or rated power; 3 At PV-USA Test Conditions: 1000 W/m², 20°C ambient temperature, 1 m/s wind speed; 4 800 W/m², 20°C ambient temperature, 1 m/s wind speed, AM 1.5 spectrum; 5 When the panel is mounted using Mounting Method A (offset mounting) with rails 13 in (±1 in) from each short side of the panel as described in the Mounting Guide for this product; * f-framed, a-low voltage, 3-matt blue (textured) cells and black anodized frame.*

ELECTRICAL EQUIPMENT
CHECK WITH YOUR INSTALLER

MECHANICAL specifications

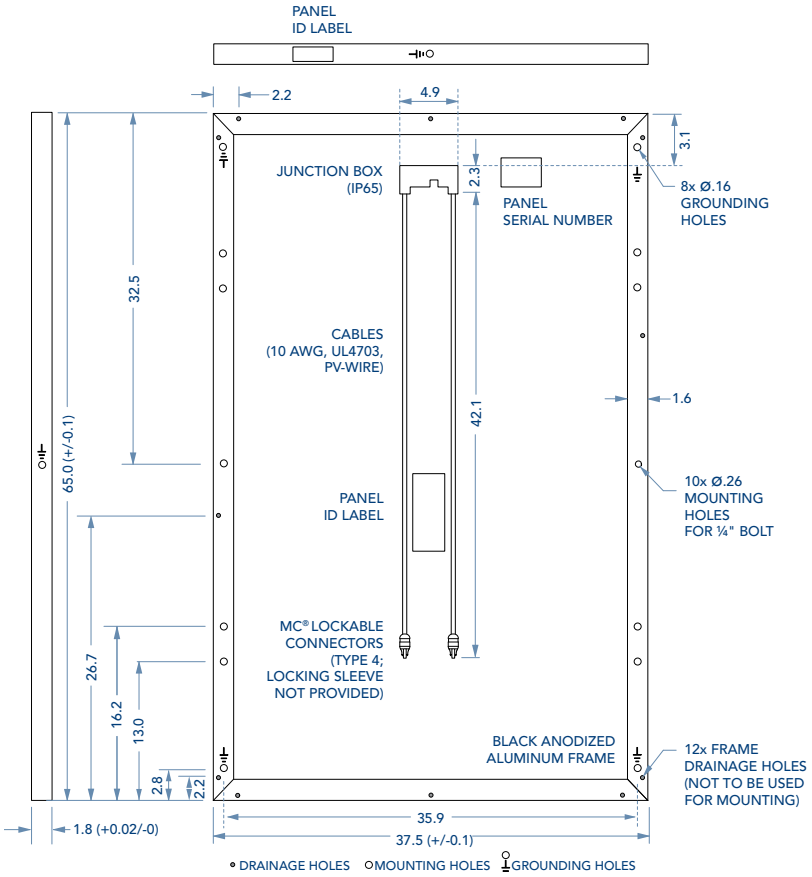

ALL DIMENSIONS IN INCHES; PANEL WEIGHT 41 LBS (18.6 KG)

The above drawing is a graphical representation of the product; for engineering quality drawings please contact Evergreen Solar. MC® is a registered trademark of Multi-Contact AG. Product constructed with 114 multi-crystalline silicon String Ribbon™ solar cells, anti-reflective tempered solar glass, EVA encapsulant, polymer back-skin and a black anodized double-walled aluminum frame.

Product packaged 28 per pallet and tested to International Safe Transit Association (ISTA) Standard 2B. All specifications in this product information sheet conform to EN 50380. See the Evergreen Solar Safety, Installation and Operation Manual, Mounting Guide and Inverter Selection Guide for further information on approved installation and use of this product.

Due to continuous innovation, research and product improvement, the specifications in this product information sheet are subject to change without notice. No rights can be derived from this product information sheet and Evergreen Solar assumes no liability whatsoever connected to or resulting from the use of any information contained herein.

PARTNER

ES-A_200_205_210_fa3_US_010609; effective June 1st 2009

Evergreen Solar Inc.
www.evergreensolar.com

WORLDWIDE HEADQUARTERS
Evergreen Solar Inc.
138 Bartlett Street, Marlboro, MA 01752, USA
T +1.508.357.2221 **F** +1.508.229.0747
info@evergreensolar.com

CUSTOMER SERVICE Americas and Asia
Evergreen Solar Inc.
138 Bartlett Street, Marlboro, MA 01752, USA
T +1.508.357.2221 **F** +1.508.229.0747
sales@evergreensolar.com

SOLECTRIA RENEWABLES

Grid-Tied PV Inverters

PVI 60KW PVI 82KW PVI 95KW

a breakthrough in price and quality

Solectria introduces the PVI 60KW, PVI 82KW and PVI 95KW inverter: exceptional quality and efficiency at an extraordinary price.

Product Information

OVERVIEW: INTEGRATED PV INVERTER

The Solectria Renewables PVI 60KW, PVI 82KW and PVI 95KW are rugged, DSP-controlled, premium efficient PV inverters for grid-connected commercial, industrial and utility 3-phase PV systems. The core of the inverter, a 600VDC version of Solectria's proven DMGI 660 distributed generation inverter, uses state-of-the-art control techniques and devices including space vector PWM, a precision MPT algorithm, and low-loss IGBTs. With peak inverter power electronics efficiency over 98% (over 96.5% including the transformer and filters) and fully integrated packaging, these inverters set a new industry standard for efficiency, ease of installation and use, reliability and installed cost.

APPLICATIONS

- 40-95kWAC, 60Hz, 480, 240 or 208VAC, 3-phase, grid-tied commercial PV systems (50-115kWDC STC array).
- Multiple inverters can be used together in any combination for 150, 200, 500kW, MW or larger PV systems.
- Designed for mounting as desired, in full sun, driving rain and drifting snow: rooftop/ground or indoors.
- Can be used for other renewable and distributed generation applications such as wind power, hydro, geothermal and biomass as new technologies develop.

FEATURES & OPTIONS

- Fully integrated design includes transformer, filters, and heavy duty, visible blade AC & DC disconnects (with optional DC sub-combiner fuses).
- No nighttime standby losses.
- Industry-leading overall efficiency.
- Simple set-up and connections (connect DC from PV combiners and 3-phase AC connections).
- Precision DSP-controlled Maximum Power Tracking Algorithm.
- High-reliability design, based on 20 years of power electronics development, includes sealed power and signal electronics unit and high-efficiency magnetics.
- Optional fused DC sub-combiner (2-48 fuses, 8-250A).
- Optional positive grounded version.
- Optional fwd. facing disconnect orientation (AC, DC or both).
- Optional stainless steel enclosure & disconnects

CONNECTIVITY

- RS232 and PC software for diagnostics and data capture.
- RS485 port for communication with multiple inverters in larger systems, or with long communication lines.
- SolrenView or Fat Spaniel Inverter-Direct Internet, and/or revenue-grade monitoring options available. Also compatible with Energy Recommerce, Draker and others.

SAFETY FEATURES

- Electronic temperature protection.
- DC Ground-fault detection and interrupt.
- Current limit protections.
- Standards-compliance: All inverters Listed to UL 1741 and IEEE Std 1547 and certified to IEEE 62.41 (NY SIR Surge Test Requirements). Units are also listed on CEC's eligible equipment list.

SPECIFICATIONS

	PVI 60KW	PVI 82KW	PVI 95KW
Output			
Continuous AC Power (CEC)	60 kW	83 kW	95 kW
Power Factor	> 0.98		
Voltage (L-L), ±10%	208 / 240 / 480 VAC, 3-Ph		
Rated Current (CEC) 208VAC	166A	229A	261A
240VAC	146A	200A	230A
(CEC) 480VAC	73A	100A	115A
Current Distortion	< 5% THD, Nom Power		
Frequency, ±1 %	60 Hz		
Inverter Electronics Peak Efficiency	> 98% (50%-100% load)		
Overall Peak Efficiency [1]	> 96.5% (50%-100% load) @ 480 VAC		
CEC Efficiency	> 95.5% (50%-100% load) @ 480 VAC		
Input			
Array Configuration:	Monopole, negative grounded (Positive ground option)		
Max V_{OC} [2]	600 VDC		
Maximum DC Current	190A	248A	287A
CEC Eligible DC Current	177A	241A	279A
MPT Voltage Range [3]	330-500 VDC		
CEC Full Power Voltage Range	346-480 VDC		
Protection [4]			
AC Grid-connection (Standards Compliance: See "Safety Features")	Over/Under Voltage, Over Current Over/Under Freq., DC Ground Fault (GFDI)		
AC Disconnect (Integral)	NEMA 3R, Integral		
DC Sub-Combiner w/Fuses (Optional [5])	8A-250A fuses available, 2-48 pole, NEMA 3R, TVSS		
DC Disconnect (Integral)	Break load rated, NEMA 3R		
Environmental			
Ambient Temperature	-25 to 50 deg C (full power)		
Cooling	Automatic Forced Convection		
Enclosure	Rain Proof (UL 1741)		
Electronics Enclosure	Sealed (IP62)		
General			
Weight lb (kg)	1526 (694)	1615 (734)	1748 (794)
Dimensions: inch [mm] [6] (Height w/o lifting eyes) 208VAC	76[1930] H x 56[1422] W x 29.3[744] D		
480VAC	76[1930] H x 54[1372] W x 25.3[643] D		
Communications, Optional Data Acquisition	RS232, RS485, optional SolrenView or Fat Spaniel, also compatible with others		
Warranty	5 years standard (optional 10 & 15 year warranties)		

[1] Fully Integrated Package: Includes premium efficient transformer, filters, brushless blower, AC & DC disconnects. (>95.5% peak efficiency for 208VAC versions).
[2] Max Open circuit voltage (V_{OC}) of PV array = 1.25 x V_{oc} rated (per NEC 690-7).
[3] 5% Low DC voltage tap option available for lower voltage PV arrays or hot climates.
[4] Complies with grid connection and safety standards ("Safety Features").
[5] Integrated into inverter package if selected.
[6] Fwd face disco width: AC only-68" (79"-208V), DC only-71" (73"-208V), both-82.5" (93.5"-208V)

PVI 60KW PVI 82KW PVI 95KW

Grid-Tied PV Inverters

INTEGRATED INVERTER

DIMENSIONS

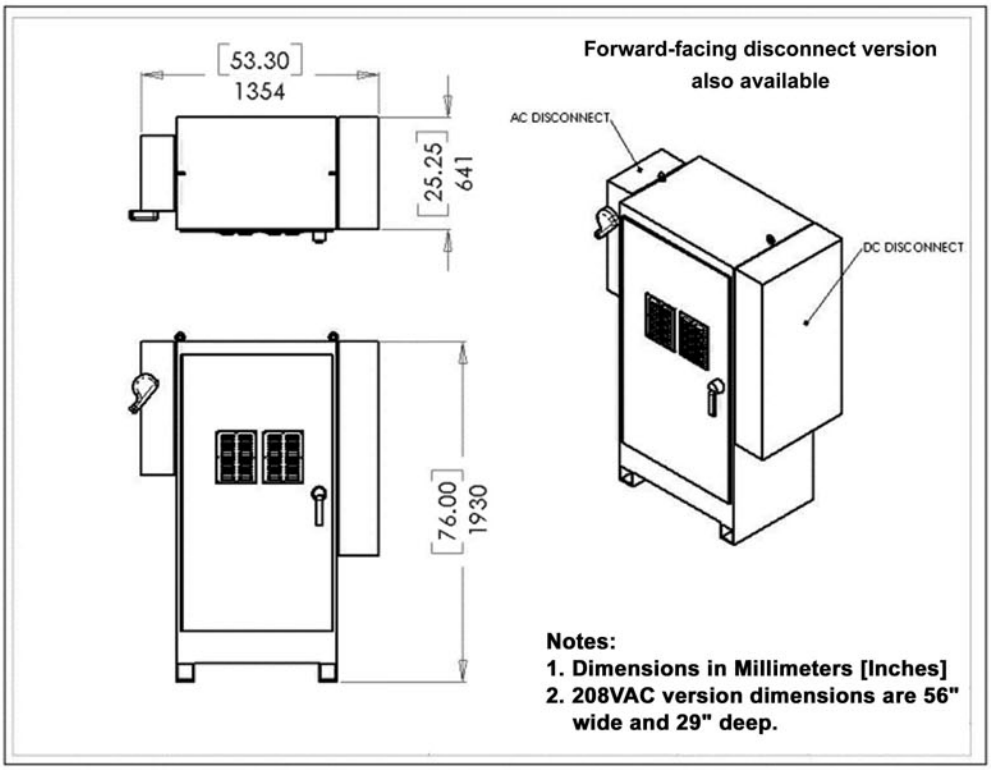

PVI 60-95KW 3-PHASE COMMERCIAL / INDUSTRIAL INVERTER BLOCK DIAGRAM

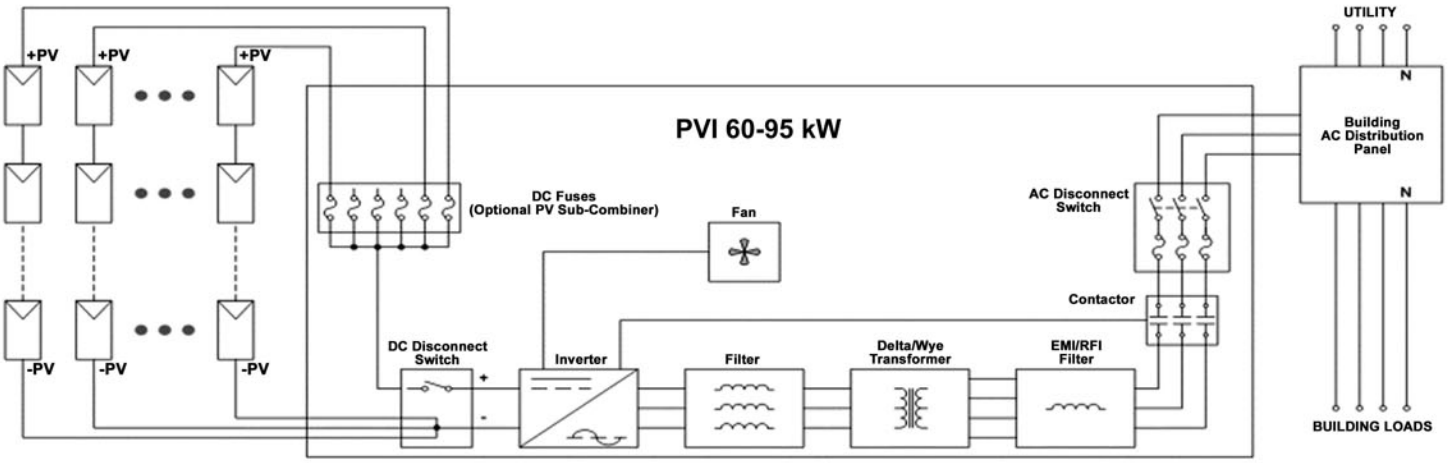

Note: Ground Fault Detection/Interrupt not shown in this diagram.

proven history, sustainable future

Solectria Renewables designs and manufactures power electronics for renewable power generation systems. Feature-packed and highly integrated, the products lead the industry in installation ease and total value. At the heart of Solectria's products are its reliable and efficient core inverters, which have been proven over the past 20 years in the extremely harsh environment of truck, bus and military transportation applications. Solectria Renewables is run by the renowned MIT engineers who founded the Solectria brand in 1989. With a customer-focused team, high quality suppliers and a best practices manufacturing process, Solectria is committed to your success.

SOLECTRIA RENEWABLES

Lawrence, Massachusetts
USA

Ph: 978.683.9700 (MA)
Ph: 562.608.8913 (CA)
Fax: 978.683.9702
inverters@solren.com
www.solren.com

Background: 118kW Spire Corporation installation at North Coast Seafoods includes a PVI 95KW inverter.
Left: 1.26MW Chico Electric/DC Power Systems installation at Sierra Nevada Brewery.
Right: 1.2MW Third Energy Development installation at Hyundai Heavy Industries in Hae Nam, South Korea.

SHARP®

solar electricity

72 WATT

OnEnergy™ SYSTEM MODULE

NEC 2008 Compliant

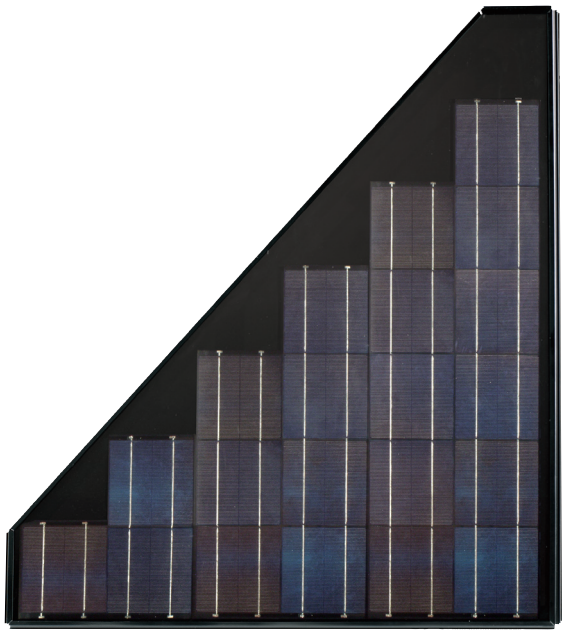

ND-72ERUC/ND-72ELUC

RESIDENTIAL 72 WATT MODULE FROM THE WORLD'S TRUSTED SOURCE FOR SOLAR.

Designed to partner with the 142 watt module in the Sharp OnEnergy solar system, our exclusive triangular module sets a new standard in aesthetics for residential hip roofs and complex roof lines. Sharp's OnEnergy system replaces the bulky look of traditional solar roof mounts with a clean, elegant appearance that blends beautifully with rooflines. Using breakthrough technology, made possible by nearly 50 years of proprietary research and development, this module incorporates an advanced surface texturing process to increase light absorption and improve efficiency. Sharp is proud to offer innovative product choices that blend the power of solar electricity with the aesthetics of modern architecture.

ENGINEERING EXCELLENCE

Designed for use with the 142 watt module and Sharp's OnEnergy solar racking system, this module is the perfect combination of technology and design.

ADVANCED AESTHETICS

A Sharp exclusive, the triangular module sets a new standard in aesthetics for residential hip roofs and complex roof lines.

DURABLE

Tempered glass, EVA lamination and weatherproof backskin provide long-life and enhanced cell performance.

RELIABLE

25-year limited warranty on power output.

HIGH PERFORMANCE

This module uses an advanced surface texturing process to increase light absorption and improve efficiency.

[Designed for]

ONENERGY™ solar system by Sharp

Black frame and low profile racking complement roofline.

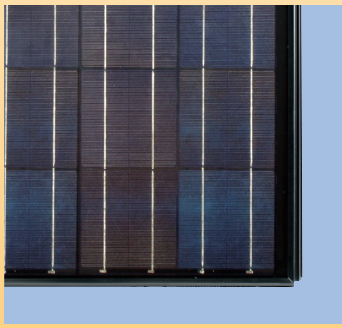

Laminated glass construction in a high torsion frame.

SHARP: THE NAME TO TRUST

When you choose Sharp, you get more than well-engineered products. You also get Sharp's proven reliability, outstanding customer service and the assurance of our 25-year limited warranty on power output. A global leader in solar electricity, Sharp powers more homes and businesses than any other solar manufacturer worldwide.

BECOME POWERFUL

72 WATT

ND-72ERUC/ND-72ELUC

NEC 2008 Compliant
Module output cables now 12 AWG with locking connectors

ELECTRICAL CHARACTERISTICS

Maximum Power (Pmax)*	72 W
Tolerance of Pmax	+10%/-5%
Type of Cell	Polycrystalline silicon
Cell Configuration	21 in series
Open Circuit Voltage (Voc)	12.71 V
Maximum Power Voltage (Vpm)	10.03 V
Short Circuit Current (Isc)	7.89 A
Maximum Power Current (Ipm)	7.18 A
Maximum System (DC) Voltage	600 V
Series Fuse Rating	15 A
NOCT	47.5°C
Temperature Coefficient (Pmax)	-0.485%/°C
Temperature Coefficient (Voc)	-0.36%/°C
Temperature Coefficient (Isc)	0.053%/°C

*Measured at (STC) Standard Test Conditions: 25°C, 1 kW/m² insolation, AM 1.5

IV CURVES

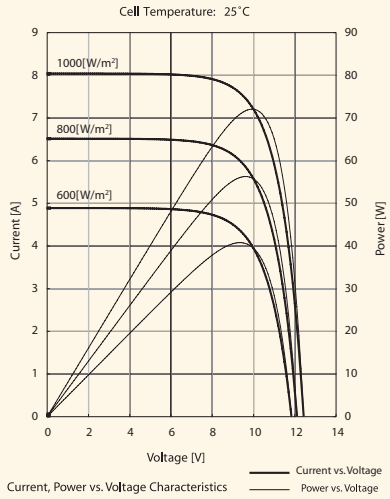

Current, Power vs. Voltage Characteristics

MECHANICAL CHARACTERISTICS

Dimensions (A x B x C below)	39.0" x 45.9" x 1.8"/990 x 1165 x 46 mm
Cable Length (O)	43.3"/1100 mm
Output Interconnect Cable**	12 AWG with MC4 Locking Connector
Weight	23.14 lbs / 10.5 kg
Max Load	50 psf (2400 Pascals)

**A safety lock clip (Multi Contact part number PV-SSH4) may be required in readily accessible locations per NEC 2008 690.33 (C)

QUALIFICATIONS

UL Listed	UL 1703
Fire Rating	Class C

WARRANTY

25-year limited warranty on power output
Contact Sharp for complete warranty information

DIMENSIONS

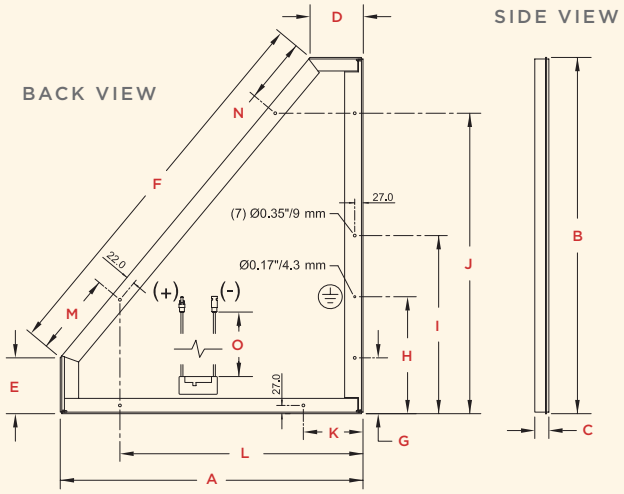

A	B	C	D	E
39.0"/990 mm	45.9"/1165 mm	1.8"/46 mm	6.8"/173 mm	7.2"/183 mm
F	**G**	**H**	**I**	**J**
50.3"/1278 mm	7.2"/183 mm	15.1"/383 mm	22.9"/583 mm	38.7"/983 mm
K	**L**	**M**	**N**	**O**
7.7"/195 mm	31.3"/795 mm	10.6"/271 mm	8.4"/213 mm	43.3"/1100 mm

Contact Sharp for tolerance specifications

Design and specifications are subject to change without notice.
Sharp is a registered trademark of Sharp Corporation. All other trademarks are property of their respective owners. OnEnergy and all related trademarks are trademarks or registered trademarks of Sharp Corporation and/or its affiliated companies. Contact Sharp to obtain the latest product manuals before using any Sharp device.

SHARP ELECTRONICS CORPORATION
5901 Bolsa Avenue, Huntington Beach, CA 92647
1-800-SOLAR-06 • Email: sharpsolar@sharpusa.com
www.sharpusa.com/solar

© 2008 Sharp Electronics Corporation. All rights reserved.

08L-033 • PC-11-08

SHARP®

solar electricity

142 WATT

OnEnergy™ SYSTEM MODULE

NEC 2008 Compliant

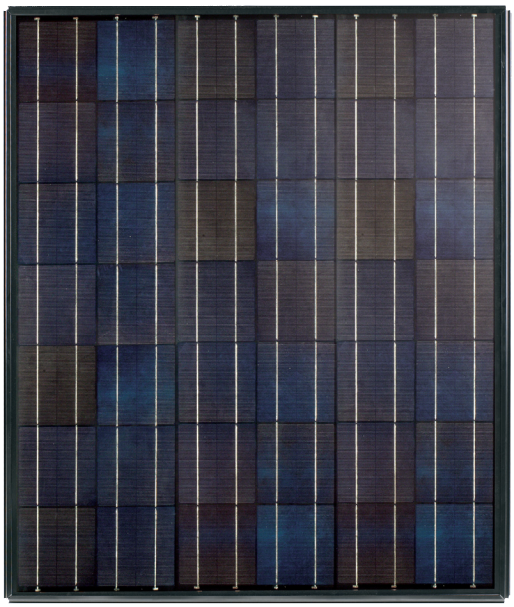

ND-N2ECUC

RESIDENTIAL 142 WATT MODULE FROM THE WORLD'S TRUSTED SOURCE FOR SOLAR.

This high-quality residential solar module is designed and engineered for use with the Sharp OnEnergy solar system. Sharp's OnEnergy system replaces the bulky look of traditional solar roof mounts with a clean, elegant appearance that blends beautifully with rooflines. Using breakthrough technology, made possible by nearly 50 years of proprietary research and development, this module incorporates an advanced surface texturing process to increase light absorption and improve efficiency. Ideal for virtually all sizes of residential solar systems, this module offers improved aesthetics and durability under the most rigorous operating conditions.

ENGINEERING EXCELLENCE

Designed and engineered for use with Sharp's OnEnergy solar racking system, this module is the perfect combination of technology and design.

ADVANCED AESTHETICS

Black frame module, and associated racking with hidden hardware and tapered covers, delivers a clean, elegant appearance that blends beautifully with your home's roofline.

DURABLE

Tempered glass, EVA lamination and weatherproof backskin provide long-life and enhanced cell performance.

RELIABLE

25-year limited warranty on power output.

HIGH PERFORMANCE

This module uses an advanced surface texturing process to increase light absorption and improve efficiency.

[Designed for]

ONENERGY™ solar system by Sharp

Black frame and low profile racking complement roofline.

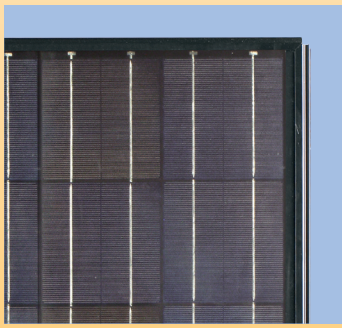

Laminated glass construction in a high torsion frame.

SHARP: THE NAME TO TRUST

When you choose Sharp, you get more than well-engineered products. You also get Sharp's proven reliability, outstanding customer service and the assurance of our 25-year limited warranty on power output. A global leader in solar electricity, Sharp powers more homes and businesses than any other solar manufacturer worldwide.

BECOME POWERFUL

142 WATT

ND-N2ECUC

NEC 2008 Compliant
Module output cables now 12 AWG with locking connectors

ELECTRICAL CHARACTERISTICS

Maximum Power (Pmax)*	142 W
Tolerance of Pmax	+10%/-5%
Type of Cell	Polycrystalline silicon
Cell Configuration	42 in series
Open Circuit Voltage (Voc)	25.24 V
Maximum Power Voltage (Vpm)	19.92 V
Short Circuit Current (Isc)	7.84 A
Maximum Power Current (Ipm)	7.13 A
Module Efficiency (%)	12.31%
Maximum System (DC) Voltage	600 V
Series Fuse Rating	15 A
NOCT	47.5°C
Temperature Coefficient (Pmax)	-0.485%/°C
Temperature Coefficient (Voc)	-0.36%/°C
Temperature Coefficient (Isc)	0.053%/°C

*Measured at (STC) Standard Test Conditions: 25°C, 1 kW/m² insolation, AM 1.5

IV CURVES

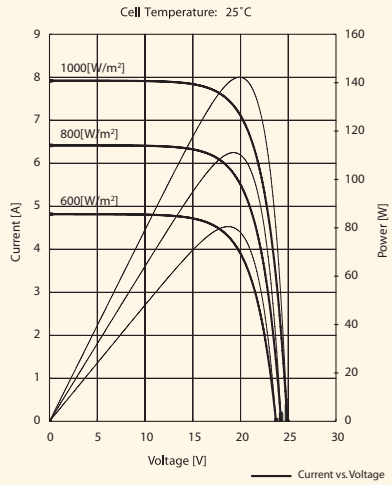

Current, Power vs. Voltage Characteristics

MECHANICAL CHARACTERISTICS

Dimensions (A x B x C below)	39.0" x 45.9" x 1.8"/990 x 1165 x 46 mm
Cable Length (J)	43.3"/1100 mm
Output Interconnect Cable**	12 AWG with MC4 Locking Connector
Weight	31.96 lbs / 14.5 kg
Max Load	50 psf (2400 Pascals)

**A safety lock clip (Multi Contact part number PV-SSH4) may be required in readily accessible locations per NEC 2008 690.33 (C)

DIMENSIONS

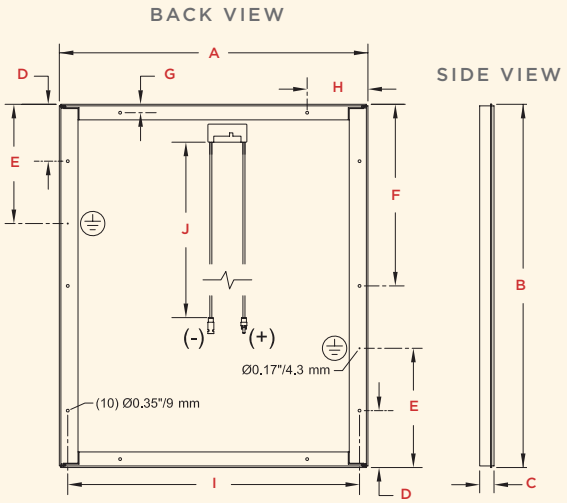

A	B	C	D	E
39.0"/990 mm	45.9"/1165 mm	1.8"/46 mm	7.2"/183 mm	15.1"/383 mm
F	**G**	**H**	**I**	**J**
22.9"/583 mm	1.1"/27 mm	7.7"/195 mm	36.9"/936 mm	43.3"/1100 mm

Contact Sharp for tolerance specifications

QUALIFICATIONS

UL Listed	UL 1703
Fire Rating	Class C

WARRANTY

25-year limited warranty on power output
Contact Sharp for complete warranty information

Design and specifications are subject to change without notice.
Sharp is a registered trademark of Sharp Corporation. All other trademarks are property of their respective owners. OnEnergy and all related trademarks are trademarks or registered trademarks of Sharp Corporation and/or its affiliated companies. Contact Sharp to obtain the latest product manuals before using any Sharp device.

SHARP®

SHARP ELECTRONICS CORPORATION
5901 Bolsa Avenue, Huntington Beach, CA 92647
1-800-SOLAR-06 • Email: sharpsolar@sharpusa.com
www.sharpusa.com/solar

© 2008 Sharp Electronics Corporation. All rights reserved.

08L-033 • PC-11-08

SOLECTRIA RENEWABLES

Grid-Tied PV Inverters

PVI 13KW PVI 15KW

a breakthrough in price and quality

ETL LISTED

Solectria introduces the PVI 13KW and PVI 15KW inverter: exceptional quality and efficiency at an extraordinary price.

Product Information

OVERVIEW: INTEGRATED PV INVERTER

The Solectria Renewables PVI 13KW and PVI 15KW are rugged, DSP-controlled PV inverters for grid connected commercial, industrial and utility 3-phase PV systems. The core of the inverter, Solectria Renewables' proven DMGI 245 distributed generation inverter, uses state of the art control techniques and devices including space vector PWM, a precision MPT algorithm, and low-loss rench-gate IGBTs. With inverter power electronics efficiency up to 97% (95.8% including the transformer) and fully integrated packaging, the PVI 13KW and PVI 15KW set a new industry standard for efficiency, ease of installation, and reliability.

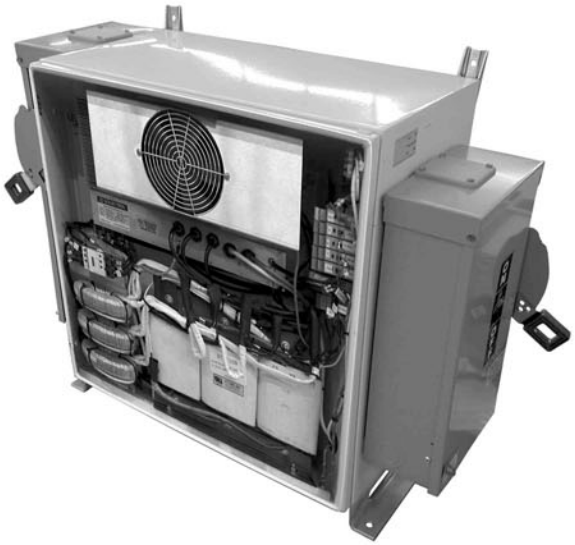

APPLICATIONS

- *10-15kW, 60Hz, 208, 240 or 480VAC, 3-phase, grid-tied commercial PV systems (up to 15-18kW DC-STC).*
- *Multiple inverters can be used together for 20-30kW, 30-45kW, 40-60kW (AC) or larger PV systems. Ideal for 20-35kW, 36-54kW, 48-72kW DC STC arrays.*
- *Designed for mounting as desired, indoor/outdoor, driving rain and drifting snow: rooftop/ground/wall.*
- *Versions for other renewable and distributed generation applications available.*

FEATURES & OPTIONS

- *Fully integrated design includes transformer, filters, AC & DC disconnects, DC combiner-fuses.*
- *Premium overall efficiency.*
- *Simple set-up and connections (connect DC from PV strings and 3-phase AC connections).*
- *Precision DSP-controlled Maximum Power Tracking Algorithm.*
- *High-reliability design, based on 20 years of power electronics products, includes sealed power and signal control electronics, high-efficiency magnetics.*
- *No night-time standby losses.*
- *Optional 6-7 fuse PV combiner in DC disconnect.*
- *Optional "Blizzard-Proof", gasketed disconnects, recommended for rooftop or other severe locations.*
- *Optional forward facing disconnects option (version).*
- *Optional positive grounding version.*

CONNECTIVITY

- *RS232 port and software for diagnostics and data capture with PC.*
- *RS485 port for communication with multiple inverters in larger system and long communication lines.*
- SolrenView or Fat Spaniel Inverter-Direct Internet, and/or revenue-grade monitoring options available. Also compatible with Energy Recommerce, Draker and others.

SAFETY FEATURES

- *Electronic temperature protection, intelligent cooling*
- *DC ground-fault detection and interrupt.*
- *Current and voltage limit protections.*
- *Standards-compliance: Listed to UL 1741 (IEEE Std 1547) and tested to NY SIR Surge Test Requirements (IEEE 62.41). Listed on CEC's eligible equipment list.*

SPECIFICATIONS

	PVI 13KW	PVI 15KW
Output		
Maximum Cont. Power	13.2 kW AC	15 kW AC
Power Factor	Unity	
Voltage (L-L), -12%, +10%	208/240/480 VAC, 3-Ph	
Maximum Cont. Current (AC)	37/32/16 A	42/36/18 A
Current Distortion	< 5% THD, Nom Power	
Frequency, ±1%	60 Hz	
Inverter peak Efficiency [1]	95.8%	95.8%
Input		
Array Configuration: Monopole, negative grounded (pos gnd opt)		
Max V_{OC} [2]	475 VDC	
Maximum DC Current	60 A	68 A
MPT Voltage Range CEC Full Power Voltage Range	225-380 VDC 235-380 VDC	
Protection [3]		
AC Grid-Connection (Standards Compliance: See "Safety Features")	Over/Under Voltage Over Current Over/Under Freq.	
AC Disconnect (Integral)	NEMA 3R, w/fuses	
DC Combiner-Fuse Enclosure (Optional [4])	10A/15A fuses available, 6-7 pole, NEMA 3R, TVSS	
DC Disconnect (Integral)	Break load rated, NEMA 3R	
Environmental		
Ambient Temperature	-25 to 50 deg C	
Cooling	Forced Convection	
Enclosure	NEMA 3R	
Enclosure-electronics	Sealed, IP-62	
General		
Weight	376 lb[1] (171 kg)	398 lb[1] (181 kg)
Dimensions[5] (inches [mm])	34.5[876] · 26[660] · 13.6[345]	
Warranty	5 years (10 & 15 extended available)	
Communications, Optional Data Acquisition	RS232, RS485, optional SolrenView or Fat Spaniel, also compatible with others	

[1] Fully Integrated Package: Includes transformer, filters, fan, AC & DC disconnects, and combiner-fuse box
[2] Max Open circuit voltage (V_{OC}) of PV array = 1.25 x $V_{oc\text{-}rated}$ (per NEC 690-7)
[3] Complies with grid connection and safety standards ("Safety Features")
[4] Integrated into inverter package if selected
[5] Forward-facing disconnect option width is 47" (1194 mm)

PVI 13KW PVI 15KW

Grid-Tied PV Inverters

PRE-TEST INSPECTION

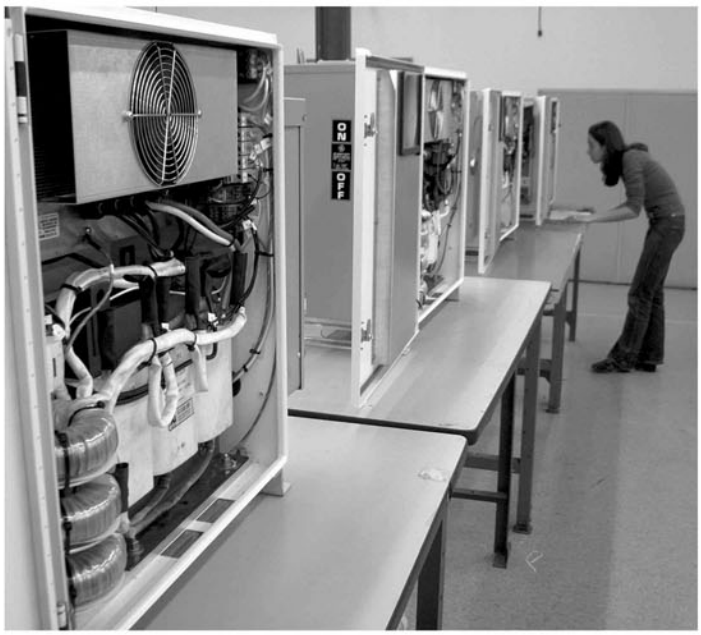

DIMENSIONS

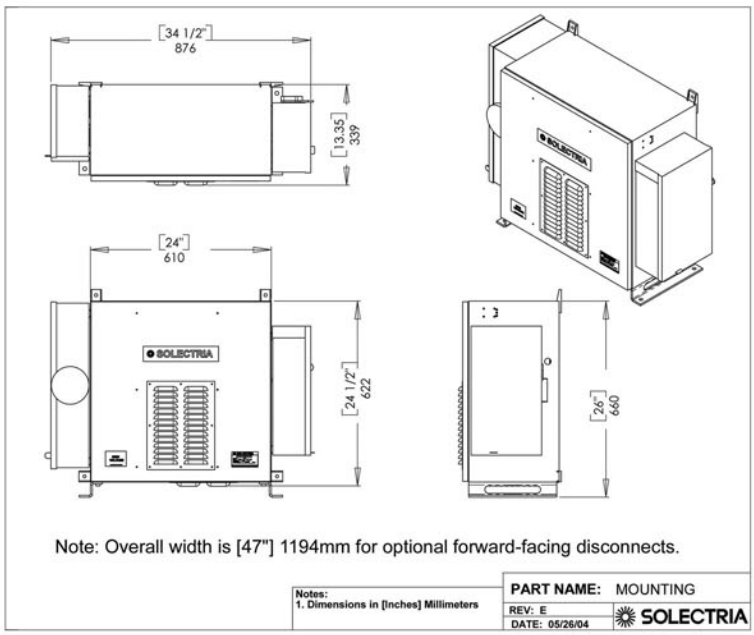

SYSTEM BLOCK DIAGRAM

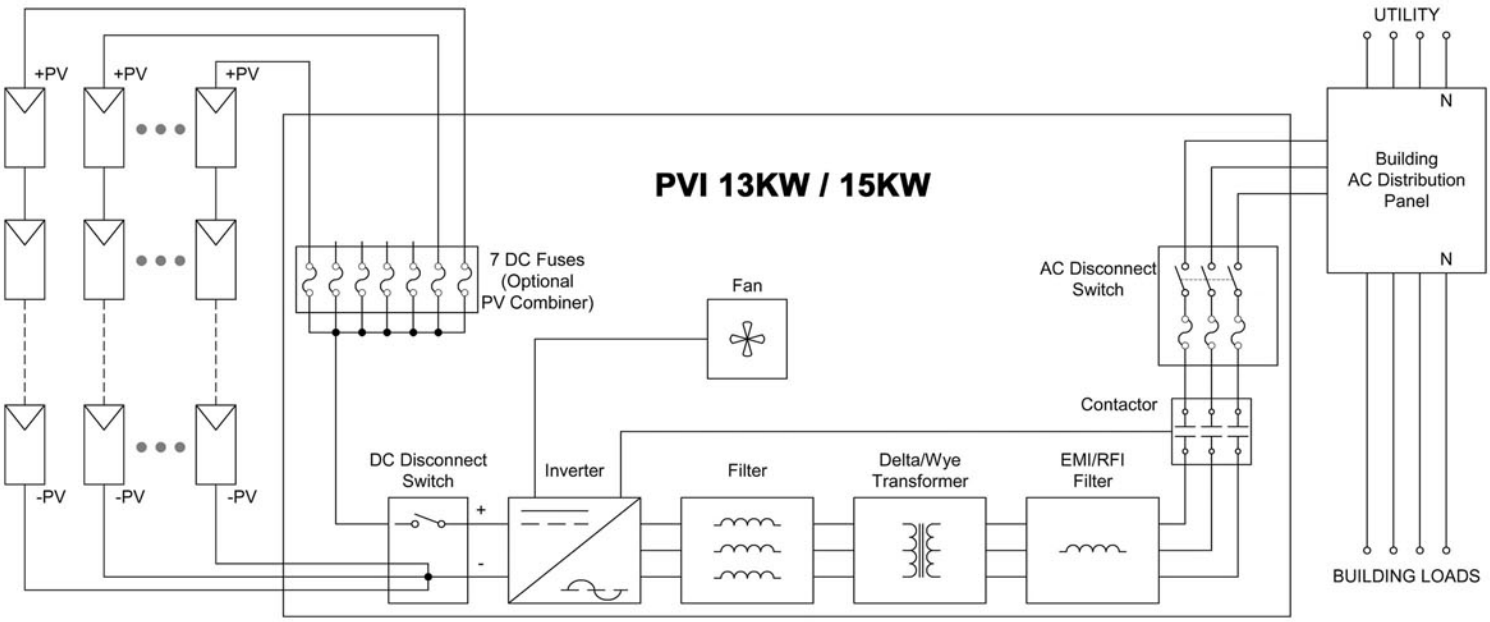

Note: Ground Fault Detection/Interrupt not shown in this diagram.

proven history, sustainable future

Solectria Renewables designs and manufactures power electronics for renewable power generation systems. Feature-packed and highly integrated, the products lead the industry in installation ease and total value. At the heart of Solectria's products are its reliable and efficient core inverters, which have been proven over the past 20 years in the extremely harsh environment of truck, bus and military transportation applications. Solectria Renewables is run by the renowned MIT engineers who founded the Solectria brand in 1989. With a customer-focused team, high quality suppliers and a best practices manufacturing process, Solectria is committed to your success.

SOLECTRIA RENEWABLES

Lawrence, Massachusetts
USA

Ph: 978.683.9700 (MA)
Ph: 562.608.8913 (CA)
Fax: 978.683.9702
inverters@solren.com
www.solren.com

Background & Left: 13.8 kW system at Evergreen Solar's mfg. facility Center: 35 kW NexAmp installation at Ebsco Publishing
Right: 120 kW system (4 of 8 inverters) by Chico Elec/Solar Design Assoc, AT&T Park, Giant's baseball stadium, San Fran, CA

9 Appendix 2: PV Principles & Practices Tutorial

9.1 Safety

This document is not intended to be an operations manual, nor is it intended to describe any one particular PV system. That said, there are several basic safety related facts about photovoltaic systems that everyone involved with them should be aware of. First among these is the fact that PV modules produce power, and thus represent a potential shock hazard, whenever sun is shining on them. Caution should always be taken to measure the voltage present on equipment terminals (disconnects, inverters, etc.) and to use approved lockout procedures when working on any PV equipment. Another thing to keep in mind is that in some situations it is possible for a piece of equipment to be energized from both the line and load sides. All equipment of this sort should be clearly marked as such. Finally, as with any piece of equipment, it is essential for anyone working with it to read and understand the manuals that come with your equipment. The practices described here reference the 2005 edition of the National Electrical Code (NEC).

9.2 Practical Overview for Commercial/Institutional Facilities Managers

This manual is intended as a guide for facilities manager, developers, general contractors, electrical contractors, estimators, and owners. It assumes a working knowledge of the issues surrounding facilities planning, construction and management. The thrust of the document is to provide the conceptual framework within which the PV novice can make informed comparisons and judgments for commercial and institutional projects. Once acquainted with the material in this manual, the user should be able to identify and articulate the areas and issues unique to his or her specific application and seek any additional information needed to formulate a plan of action.

The approach and explanations here are intended to be a practical guide to understanding the design considerations for a PV installation for your facility or project. It relies on the pool of commercially available products that can be purchased from vendors today, with all appropriate listings and warranties. The methods described here are all NEC compliant, industry standard practices. Note that your local jurisdiction may have other additional code prescriptions or proscriptions. In addition, the utility that you connect your system to may have its unique interconnection standards. The orientation of this document is decidedly financial. By this I mean that the first-order financial implications of all designs and specifications choices are pointed out explicitly throughout the treatment of the technology materials.

This manual is not intended as a design manual or guide. It is not intended as an operations manual. Once a PV system has been installed it will come with its own O&M manual, which should be read and understood. This document is not

a substitute for any system-specific documentation. This manual is not intended as a guide to residential consumers and users. While much of the "how-it-works" material is common to all PV systems, the size, scope, and the diversity of application possibilities for commercial installations far exceed those for the typical grid-tied residential system. The information and assets available to commercial institutions typically exceeds those available to most homeowners, making some portions of this document irrelevant to smaller residential applications.

9.3 What you Need to Know and No More

This manual is designed to get you up and running quickly with a basic understanding of PV technology in the context that affects you, in your practical setting and circumstances. It does not dwell upon much of the theory behind the technology. This manual attempts to explain the technology in the context of *your facility or application*, from the perspective of a user/owner/purchaser/manager.

9.3.1 Read Through the "Getting Started"

The first section of this manual, "Getting Started: The Basic Basics," captures approximately 90% of what you will need to know in order to make informed decisions about acquiring PV for your facility or project. "Getting Started," provides the fundamentals of how photovoltaic technology works. A small amount of material in this section is devoted to explaining how we get from a single small silicon cell that is typically a few inches in diameter, up to a large array that may cover acres of ground or roof space. The different kinds of "technology" (single or monocrystalline; poly or multicrystalline; thin film or amorphous) are discussed, briefly addressing the pros and cons of each. We describe the effects that the specific features of your installation (north-south orientation, tilt angle, shading obstructions, wire length, etc.) have on the operation and performance of your system. Finally, the various system configurations, either with or without an inverter and with or without battery storage, are mentioned.

"PV: What it is and What it is Not," is a brief explanation of common misnomers regarding photovoltaic technology, and a description of how basic grid-tied systems work in relation to the utility's electric grid.

Finally, the section entitled, "Knowing What You Are Buying," is an explanation of how photovoltaic system ratings, expressed in kilowatts, are calculated. This is an important concept to understand because, typically, the largest single component cost of your PV system will be the cost of the PV modules. PV capacity is measured in kilowatts, and thus, in the end, the kilowatt rating of your installation is typically what you are paying for. Determining how may kilowatts you received would be as simple as adding up the nameplate rating of all of the modules installed in your system (e.g. 185 W/module x 100 modules = an 18.5

kW system) *except* for the fact that how and where they are installed – orientation, wire sizing, shading obstructions, the site latitude, etc-- has a great deal to do with the actual output of your system and what percent of optimal your system will perform. Identical systems, installed at different locations can have very different ratings.

Throughout this manual the explanations are kept intentionally simplified. Many statements and descriptions are estimates, rules-of-thumb, or first order approximations. Should you wish to have a more detailed explanation on any of the topics you can refer to the sections at the end for additional information and web links for further reading and research.

9.4 Getting Started: The Basic Basics

9.4.1 PV Cells & Sunlight

Most photovoltaic cells are made from silicon, the basic ingredient in glass, and also in the chips that go into the computers and other electronic devices that populate our world. The fundamental building blocks of PV systems are wafers of pure silicon, specially coated so that when the sun's light hits them, they create a DC voltage, like a small battery, between the top and bottom of the wafer. If wires are attached to the top and the bottom of these wafers and then across a load, a DC current will flow in the presence of sunlight. The current passing through the load will create power and can do useful work such as power a light, or charge a battery, or turn a motor. In the case of a grid-tied system, an inverter can be used to change the DC current and voltage to AC current and voltage such as we use in most of our everyday appliances.

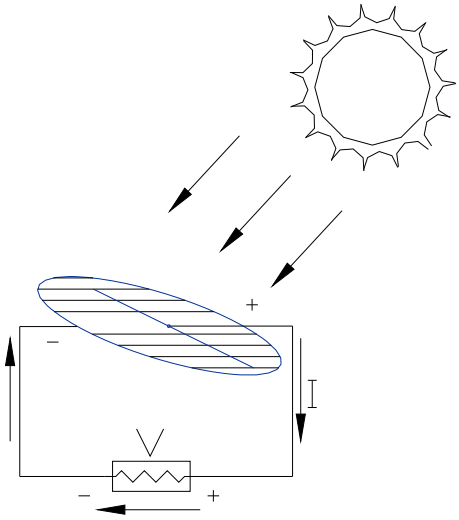

Figure 1. The photovoltaic effect

Different types of PV are often compared based upon their conversion efficiency. The efficiency of a PV cell or module, expressed as a percentage, is the ratio of the power in the sun's light hitting the surface of a cell or module to the useful power output by that cell or module. For commercially available types of PV efficiencies can range from a high of approximately 19% to a low of about 5%. For more information on how these PV wafers or "cells" are combined to provide

the currents and voltages needed for practical applications see Appendix 1: Series and Parallel Combination.

9.4.2 Cells, Modules, Panels, and Arrays

A photovoltaic module consists of PV cells sealed in an environmentally protective laminate and pre-wired to a manufacturer's specification. Modules are designed by manufacturers to meet various market needs for different voltage, current, power and physical characteristics. Photovoltaic panels consist of one or more PV modules assembled as a pre-wired, field-installable unit. Panels are generally assembled by the system installer, either on site or off site, for a particular installation. A photovoltaic array is the complete power-generating unit, consisting of any number of PV modules and panels. Physically it includes all of the necessary mounting and interconnection hardware. Electrically an array provides the design voltage and current intended for the specified end application. The system that you will end up acquiring will be an array of some type of modules designed and assembled to meet your stated objective.

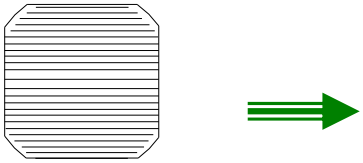

Figure 17. Single Cell

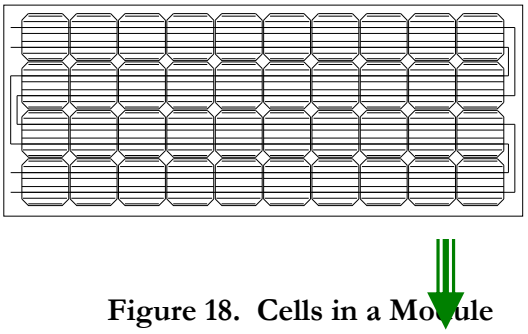

Figure 18. Cells in a Module

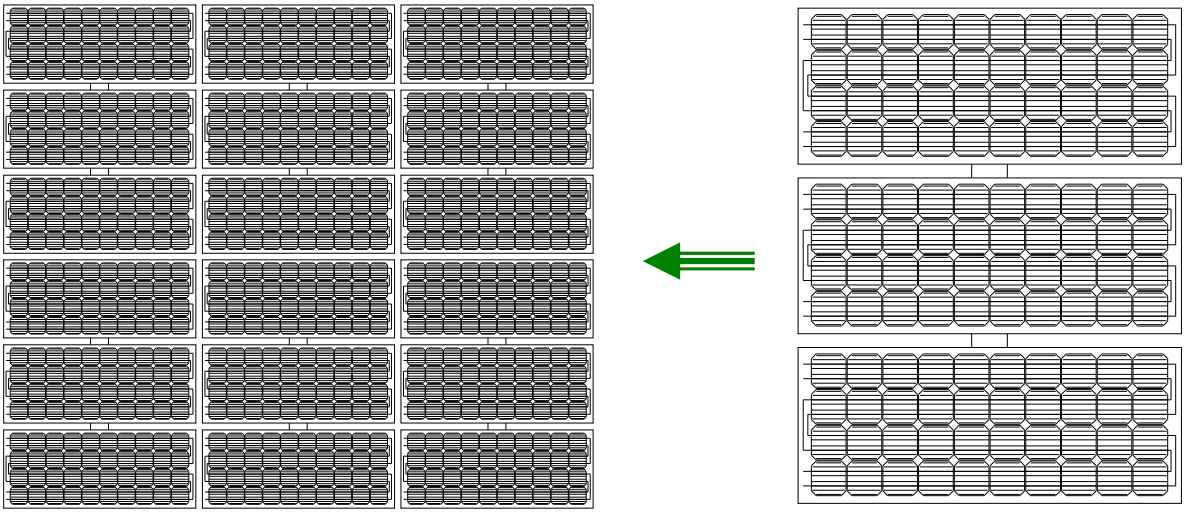

Figure 19. Panels in an Array **Figure 20. Modules in a Panel**

For more information on how these PV wafers or "cells" are combined to provide the currents and voltages needed for practical applications see Appendix 1: Series And Parallel Combination.

9.4.3 Kinds of "Technology"

In the parlance of the PV industry, when someone asks about the type of "technology" being used they are likely referring to the basic cell technology. While for our purposes it is not necessary to explain the details of each method of production that distinguishes each of these products, an understanding of the main differences and an ability to recognize them is a worthwhile goal.

There are three main "technologies" that have made their way into commercially available products. The first and oldest is single crystal or monocrystalline technology. The older devices are easily recognizable because the individual cells are round (or sometimes cut into half-rounds for space saving). Today they are being trimmed into fill up more of the module area. Each cell is exactly the same material that makes up the base layer for computer chips. Modules made from these cells are typically the highest efficiency and also the most expensive.

Somewhat less costly and less efficient is polycrystalline photovoltaic technology. Modules made from polycrystalline cells have a characteristic "flecked" appearance and can appear luminescent in the sunlight when viewed from a distance. The cells that make up the modules are usually square or rectangular (the base material is cast or "grown" in thin sheets and then cut into squares). This technology is by far the most common currently available in commercial products.

Amorphous photovoltaic technology has a uniform appearance. It is manufactured by depositing or spraying extremely thin layers of photoactive chemicals on a sheet of glass. This product is the least efficient of the three common products. It is also the least expensive. If efficiencies can be enhanced this type of photovoltaic product will become much more common in the market place.

	Monocrystalline	Polycrystalline	Amorphous
Cell Appearance	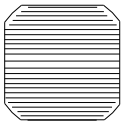		Has no cell form. Photovoltaic material is sprayed on glass substrate.
Module Appearance	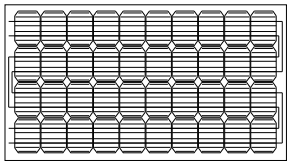	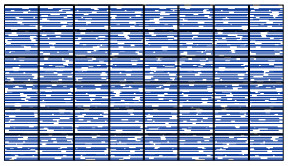	
Nominal Efficiency	14% - 20%	11% - 15%	5% - 10%
Nominal Cost per Watt	High	Moderate	Low
Typical Power Warranties	12 years at 90% rated power 25 years at 80% rated power	10 years at 90% rated power 25 years at 80% rated power	20 years at 80% rated power

Table 9: Comparison of PV Technologies

9.4.4 Performance Dependant Upon Environment

PV systems are different from most of the electrical equipment that we are familiar with in that its performance is intrinsically linked to the unique details of its site and the specifics of its installation. When we purchase a 5 horsepower motor we can be confident that it will develop the rated power when connected to a grid source because the grid itself maintains a constant nominal voltage. With a photovoltaic system the "prime mover" is the sun. As such the system's performance is dependent upon the solar resource at that particular latitude, as well as long term climate of the site and the daily variations in cloud cover and weather.

One of the issues that typically has a major impact on performance is shading by nearby structures and terrain. The shading experienced by any PV array is a consequence of the physical details of the installation --proximity to buildings and trees, tilt angle, and north-south orientation of the array-- as well as the latitude and local climate of the site.

Finally, all of the design decisions, such as wire sizes, choice of inverter, transformer losses, and use of fuses and diodes in protective equipment can

contribute to the unique performance characteristics of your system. All of these factors will have an impact on the performance of your system.

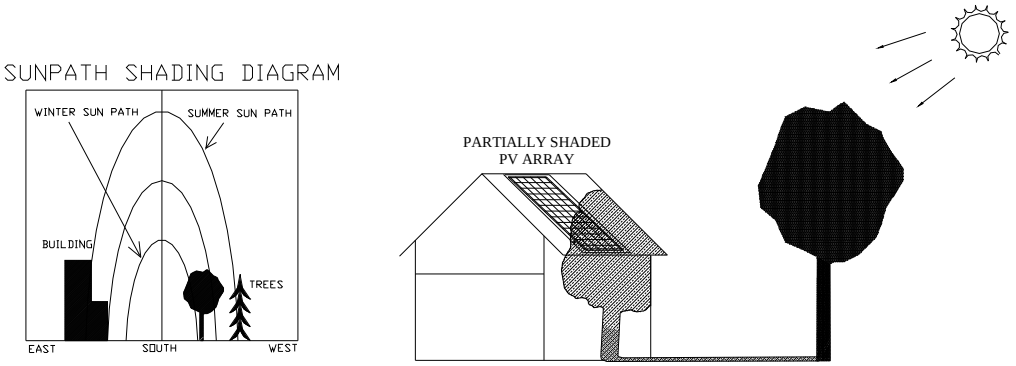

Figure 21. Shading impacts on PV performance

9.5 How You Use PV: Use as DC or Convert (Invert) to AC

9.5.1 DC Utilization

A DC utilization of a PV system is used when the load is DC only. It will typically consist of the PV array, energy conditioning equipment, batteries, and a DC load.

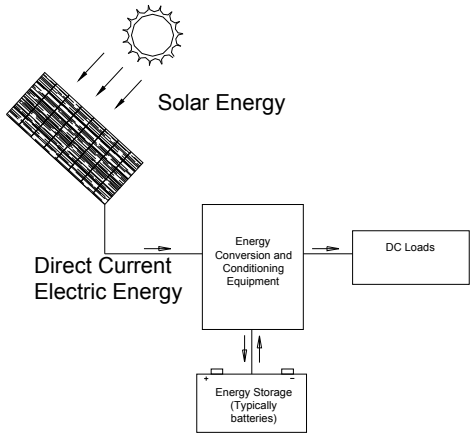

Figure 22. DC only system

9.5.2 Invert to AC

9.5.2.1 Stand-alone Systems

A stand-alone system is used for off-grid applications. It will typically consist of the PV array, energy conversion and conditioning equipment, batteries, and DC and/or AC loads. Additional energy sources such as a backup generator or a wind turbine may also be integrated into the system.

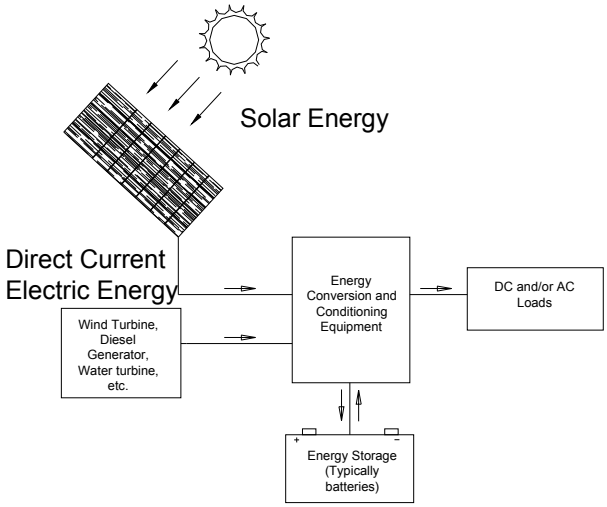

Figure 23. Stand-Alone PV System

9.5.2.2 Grid-Tied Systems

A grid-tied system is used for on-grid applications to offset energy consumed from the utility company with energy provided by a solar array. It will typically consist of the PV array, energy conversion and conditioning equipment, and a connection to the electric grid/utility. This is the simplest (from an installation and maintenance perspective) type of system and also the most common type of system being installed in the United States

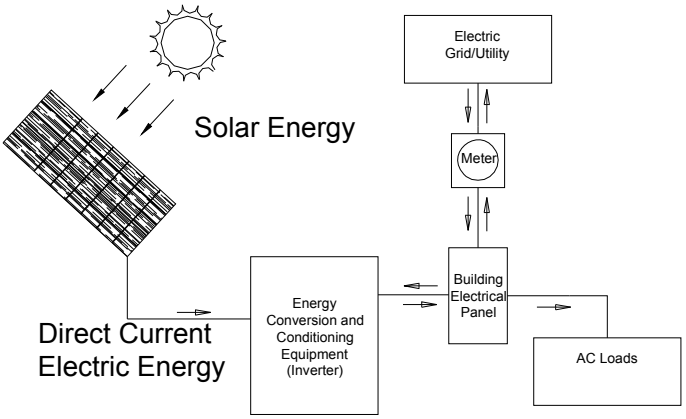

Figure 24. Grid-Tied PV System

today. Basic grid-tied systems are designed to only work when the grid is present and within specifications (frequency range, voltage range, harmonic distortion limits). They are deliberately designed with a feature called, "anti-islanding." This feature is one of several described the IEEE Standard 1547 and Underwriter Laboratories standard, UL 1741. The primary purpose of this feature is to protect linemen in the event of a downed wire on the utility side of the grid connection.

9.5.2.3 Hybrid System (w/storage)

A hybrid system is used for grid-tied applications to offset energy consumed from the utility company with a solar array and an additional energy source, such as a wind turbine or diesel generator. It will typically consist of the PV array, additional energy source, energy conversion and conditioning equipment,

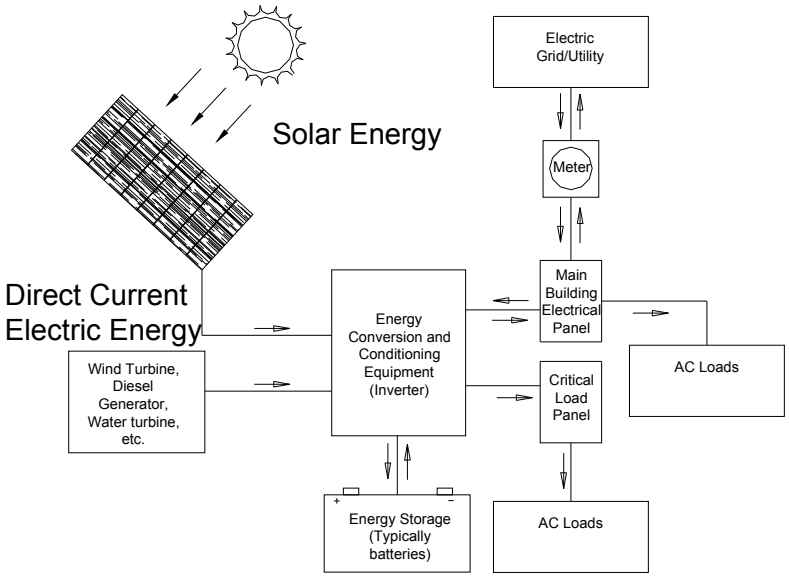

batteries, and a connection to the electric

Figure 25. Hybrid PV System (w/storage)

grid/utility. In addition to the normal AC loads hybrid systems often have "critical load" panel that is powered in the event of a power outage. In this type of configuration the PV system acts as a uninterruptible power supply (UPS).

9.6 PV: What it is and What it is Not

The most common type of PV system being installed in the United States today is the straight grid-tied variety. The following comments pertain to these types of systems and are intended to address some common misunderstandings about the technology.

9.6.1 Energy vs. Power

Grid-tied PV systems are best thought of energy sources. They do not work in the absence of the grid and as such cannot be thought of as power sources. Grid-tied system can be thought of –to use a financial image—passive income generators. Their economic value resides in the energy that the customer avoids taking from the utility and, if the customer has time-of-use billing, the time at which that utility energy consumption was avoided. PV systems can also add value by reducing peak demand for those customers that have demand charges. One thing that a simple grid-tied system cannot do is be dispatched to reduce an anticipated demand. People often ask, "What does it power?," as if the PV energy was associated with one or more particular loads in the building. The answer is simply that the energy produced by a PV array and converter form DC to AC electricity, simply contributes to the existing pool of energy coming form the utility.

9.6.2 How PV Works with the Grid

Photovoltaic inverters work with the utility grid as a parallel source. They have sophisticated sensing and control mechanisms that allow them to determine if the grid is within the tolerances specified by IEEE 1547. After being connected to the grid the inverter determines that it is within those ranges and then wait five minutes. If after that delay the PV array is producing sufficient power the inverter will start to convert its DC input to alternating current and begin to push energy back toward the utility. If at any time there is a disturbance that brings the utility outside of the prescribed tolerances for more than a predefined time interval, the inverter will automatically shut itself down. For instance, in the case of a utility power outage, a simple grid-tied inverter would shut itself down in six cycles (.1 second) or less.

9.7 Reliability and Performance

9.7.1 Reliability

PV modules produced today are very safe and reliable, with minimal failure rates. Typical life expectancy of a panel is on the order of twenty five to thirty years. You should be certain to examine and compare module manufactures warranties when comparing system proposals.

9.7.2 Performance

PV manufacturers give their panels specific ratings for output power, open circuit voltage, and short circuit current, among other things. These ratings are the outputs of the panel in ideal test conditions of a standardized temperature, air mass, and amount of solar energy referred to as Standard
Test Conditions or STC. Since a these ideal test conditions are not typically present in practical applications (STC are achieved in highly controlled laboratory test settings), the expected outputs panel of a PV panel may be around 85% to 90% of the manufacturer's STC rated values. Some attempts have been made to estimate the real world expected performance of modules through a de-rating

procedure first devised at the PVUSA facility near Sacramento California. This method is referred to as PVUSA Test Conditions or the PTC rating of a module. The California Energy Commission (CEC) uses this rating to approve modules for participation in their funded programs. Many other funding agencies have adopted this rating method making it a defacto standard.

While the PTC rating is a better indicator of how a module will perform in a real world environment, for full PV systems it can have significant limitations. The reason for this, as indicated earlier, is that the performance of a full system is dependent on a wide range of environmental factors. For example if your system has a large opaque obstruction to the east of it, it will perform poorly during certain hours of the morning. It would make no sense to say that such a system had attained the full power rating of the modules of which it was comprised.

9.8 Photovoltaic System Cell & Module Series Parallel Combinations

9.8.1 Series for Voltage

As stated earlier, a PV cell typically produces around 0.5 [V]. In order for manufacturers to produce desired module voltages, they have to connect cells in series. Connecting cells in series has an additive effect on the output voltage. The below figures show how to connect cells in series and the effects that this has on the voltage supplied to the load.

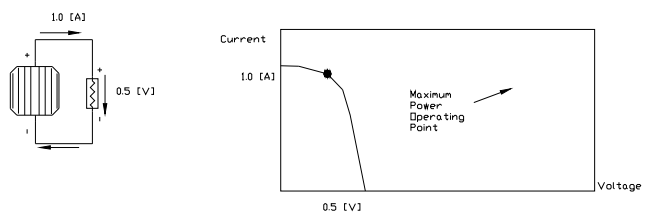

Figure 26. Voltage for One Cell

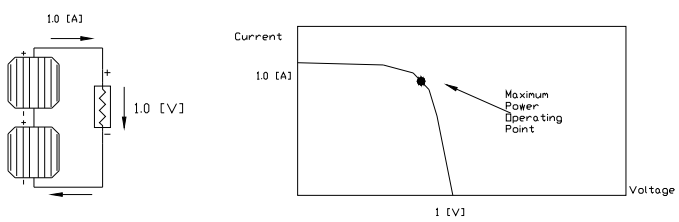

Figure 27. Voltage for Two Cells in Series

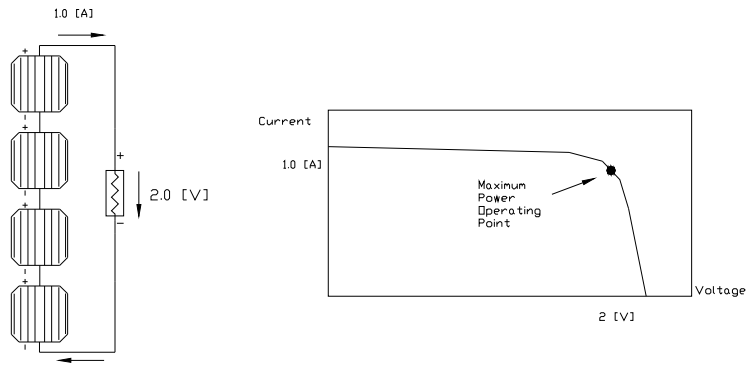

Figure 28. Voltage for Four Cells in Series

This shows the voltage produced by cells in series is additive. If 0.5 [V] is produced from one cell and 2.0 [V] are required for the load, then four cells could be placed in series to give 2.0 [V].

9.8.2 Parallel for Current

In order for manufacturers to produce desired module power, they have to connect cells in parallel. Connecting cells in parallel has an additive effect on the output current. The below figures show how to connect cells in parallel and the effects that this has on the current supplied to the load. These two figures will have an output voltage of 0.5 [V].

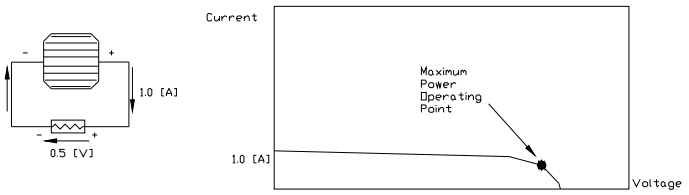

Figure 29. Current for One Cell

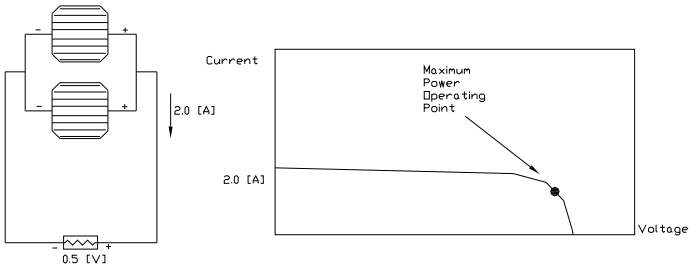

Figure 30. Current for Two Cells in Parallel

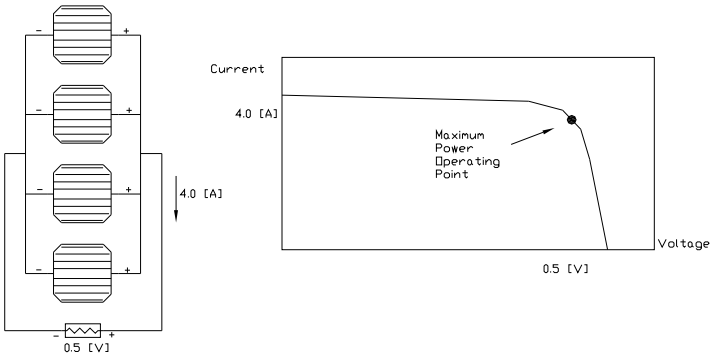

Figure 31. Current for Four Cells in Parallel

This shows the current produced by cells in parallel is additive. If 1 amp is produced from one cell at standard test conditions and 4 amps are required for the load, then 4 cells could be placed in parallel to produce approximately 4 amps under conditions of one sun. Four cells in series will produce the same amount of power as four cells in parallel.

9.8.3 Cells/Modules/Arrays

A string can be either the number of cells that are connected in series either within a module (assembled in the factory) or the number of modules in an array (assembled in the field installation). This is the configuration which gives the module or array its final voltage characteristics. In order to get desired output power at a desired voltage, strings have to be connected in the appropriate series/parallel combinations. The series combination provides the operating voltage while the parallel combination provides the operating current.

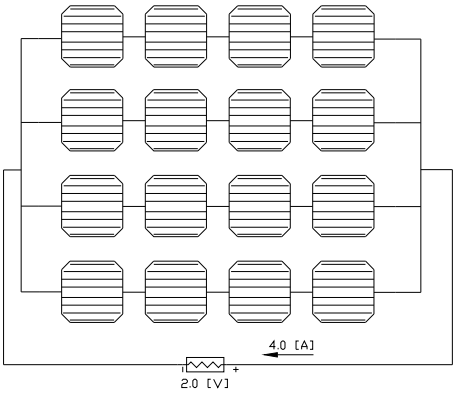

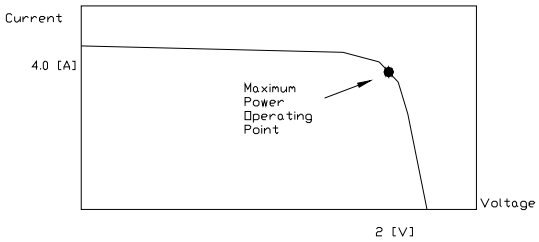

Figure 32. 4 x 4 cell module

When designing a system, four current/voltage specifications have significance. These specifications are open circuit voltage (Voc), the short circuit current (Isc), the voltage at maximum power (Vmp) and the current at maximum power (Imp). The first two specifications, Voc and Isc, pertain to the maximum voltage and current output of an array with respect to safety parameters. The second two specifications, Vmp and Imp, are important for designing a system with the desired output voltage and the desired output power needed for the operation of your inverter or DC load.

9.9 Inverters

9.9.1 Basic Function

In the most basic of utility alternating current (AC) systems there is an ungrounded conductor (the black wire) and a grounded conductor (the white wire) with a nominal voltage between the two of 120 volts. In an alternating current system one of these two conductors is physically connected to the earth or ground (the grounded conductor). The power company's generator switches the voltage of the other conductor (the ungrounded conductor) back and forth, above and below, with respect to the grounded reference, 120 times per second. This provides us with sixty full cycles per second and is what we mean when we say that the power is 60 Hertz (60Hz).[11]

The modern photovoltaic inverter (sometimes referred to generically as a *static power converter*) is an electronic device designed to convert the electrical energy from direct current (DC) generated by PV modules into alternating current that is supplied by electric utilities for our daily use. The way in which this is done is by using a set of power transistors, controlled by a microprocessor, to switch the connections from the positive and negative conductors on the DC side back an forth between the wires connected to the power company. This switching is done several thousand times per second and then "filtered" to the smooth 60 Hz sine wave that we use. A photovoltaic inverter takes the DC energy form the PV modules, when the sun is shining and the energy is available, and converts it into AC energy that is identical to that which the power company provides.

9.9.2 Sizes and Parameters

PV inverters come in many power ratings. Typical residential inverters range from under a 1000 Watts up to about five kilowatts. Commercial and utility scale inverters run from 25 to 250 kilowatts. The output parameters include systems that are single phase and three phase. Typical voltage outputs are 120 or 240 for residential units, and 208 volts for commercial units.

[11] The AC system described here is one commonly found in North America. In England, for example, you will find a voltage of 240 volts and a frequency of 50 Hz.

9.9.3 Safety Features

Inverters are unlike almost any other equipment that we install in our homes and businesses. All other devices can be broadly categorized as what the National Electrical Code (NEC) refers to as "Utilization Equipment." The NEC defines utilization equipment as, "Equipment that utilizes electric energy for electronic, electromechanical, chemical, heating, lighting, or similar purposes." This is equipment that consumes energy. PV inverters are different in that they operate in parallel with the utility grid and create (or transform) energy, pushing it back to the utility for consumption within the facility, or if the facility load is insufficient, out on to the grid.

Most modern grid-connected inverters are designed to operate only when they detect the presence of the grid, under normal conditions. They will not operate if the grid fails, as in a power outage. To do so would be what is called, "islanding," and is not permitted by current utility regulation. All inverters installed in facilities that are accessible to the public should comply with IEEE standard 929 and UL standard 1741. These standards will be incorporated as part of the testing and listing done by any nationally recognized testing laboratory (NRTL). Any inverter that is "listed" will carry the label of such a NRTL (such as Underwriters Laboratories, or Edison Testing Labs, etc.).