West Acton Boardwalk
Notice of Intent
Between Gates and Douglas Schools
Acton, MA

Submitted to:
Acton Conservation Commission

December 2010

AMY GREEN

Table of Contents

Notice of Intent Forms

Notice of Intent Report

1.0 Introduction 1

2.0 Existing Conditions 2

3.0 Proposed Action and Impacts 3

4.0 Mitigation 4

List of Figures

Figure 1 Site Location

Figure 2 2008 Aerial Photograph

Figure 3 100-Year Floodplain

Attachments

Attachment A Abutter Information

Attachment B Photographs

Attachment C Plans (under separate cover)

Massachusetts Department of Environmental Protection
Bureau of Resource Protection - Wetlands

WPA Form 3 – Notice of Intent

Massachusetts Wetlands Protection Act M.G.L. c. 131, §40

Provided by MassDEP:

MassDEP File Number

Document Transaction Number

Acton
City/Town

Important: When filling out forms on the computer, use only the tab key to move your cursor - do not use the return key.

Note: Before completing this form consult your local Conservation Commission regarding any municipal bylaw or ordinance.

A. General Information

1. Project Location (**Note:** electronic filers will click on button to locate project site):

21 Elm Street
a. Street Address

Acton
b. City/Town

01720
c. Zip Code

Latitude and Longitude:

42.480
d. Latitude

-71.472
e. Longitude

E-2
f. Assessors Map/Plat Number

247
g. Parcel /Lot Number

2. Applicant:

J.D.
a. First Name

Head
b. Last Name

Acton Public Schools
c. Organization

16 Charter Road
d. Street Address

Acton
e. City/Town

MA
f. State

01720
g. Zip Code

978-375-0101
h. Phone Number

978-264-3344
i. Fax Number

jdhead@mail.ab.mec.edu
j. Email Address

3. Property owner (required if different from applicant): ☐ Check if more than one owner

a. First Name

b. Last Name

c. Organization

d. Street Address

e. City/Town

f. State

g. Zip Code

h. Phone Number

i. Fax Number

j. Email address

4. Representative (if any):

Amy
a. First Name

Green
b. Last Name

Amy Green Environmental Consulting, LLC
c. Company

26 Captain Brown's Lane
d. Street Address

Acton
e. City/Town

MA
f. State

01720
g. Zip Code

978-266-0217
h. Phone Number

978-266-0219
i. Fax Number

amy@amy-green.com
j. Email address

5. Total WPA Fee Paid (from NOI Wetland Fee Transmittal Form):

exempt
a. Total Fee Paid

exempt
b. State Fee Paid

exempt
c. City/Town Fee Paid

Massachusetts Department of Environmental Protection
Bureau of Resource Protection - Wetlands

WPA Form 3 – Notice of Intent

Massachusetts Wetlands Protection Act M.G.L. c. 131, §40

Provided by MassDEP:

MassDEP File Number

Document Transaction Number

Acton
City/Town

A. General Information (continued)

6. General Project Description:

Repair and replacement of existing boardwalk and construction of new access to Kid Island and new floating dock

7a. Project Type Checklist:

1. ☐ Single Family Home
2. ☐ Residential Subdivision
3. ☐ Limited Project Driveway Crossing
4. ☐ Commercial/Industrial
5. ☐ Dock/Pier
6. ☐ Utilities
7. ☐ Coastal Engineering Structure
8. ☐ Agriculture (e.g., cranberries, forestry)
9. ☐ Transportation
10. ☒ Other

7b. Is any portion of the proposed activity eligible to be treated as a limited project subject to 310 CMR 10.24 (coastal) or 310 CMR 10.53 (inland)?

1. ☒ Yes ☐ No If yes, describe which limited project applies to this project:

310 10.53 (3)(j) - construction and maintenance of ...footbridges...docks...and observation decks
2. Limited Project

8. Property recorded at the Registry of Deeds for:

a. County: Middlesex
b. Certificate # (if registered land):
c. Book: 10698
d. Page Number: 0446

B. Buffer Zone & Resource Area Impacts (temporary & permanent)

1. ☐ Buffer Zone Only – Check if the project is located only in the Buffer Zone of a Bordering Vegetated Wetland, Inland Bank, or Coastal Resource Area.
2. ☒ Inland Resource Areas (see 310 CMR 10.54-10.58; if not applicable, go to Section B.3, Coastal Resource Areas).

Check all that apply below. Attach narrative and any supporting documentation describing how the project will meet all performance standards for each of the resource areas altered, including standards requiring consideration of alternative project design or location.

For all projects affecting other Resource Areas, please attach a narrative explaining how the resource area was delineated.

Resource Area	Size of Proposed Alteration	Proposed Replacement (if any)
a. ☒ Bank	0 (1. linear feet)	2. linear feet
b. ☒ Bordering Vegetated Wetland	0 (some temp disturbance) (1. square feet)	2. square feet
c. ☒ Land Under Waterbodies and Waterways	0 (1. square feet)	2. square feet
	0 (3. cubic yards dredged)	

Massachusetts Department of Environmental Protection
Bureau of Resource Protection - Wetlands

WPA Form 3 – Notice of Intent

Massachusetts Wetlands Protection Act M.G.L. c. 131, §40

Provided by MassDEP:

MassDEP File Number

Document Transaction Number

Acton
City/Town

B. Buffer Zone & Resource Area Impacts (temporary & permanent) (cont'd)

Resource Area	Size of Proposed Alteration	Proposed Replacement (if any)
d. ☒ Bordering Land Subject to Flooding	0 (1. square feet)	(2. square feet)
	0 (3. cubic feet of flood storage lost)	(4. cubic feet replaced)
e. ☐ Isolated Land Subject to Flooding	0 (1. square feet)	
	0 (2. cubic feet of flood storage lost)	(3. cubic feet replaced)
f. ☐ Riverfront Area	Fort Pond Brook (1. Name of Waterway (if available))	

2. Width of Riverfront Area (check one):

☐ 25 ft. - Designated Densely Developed Areas only

☐ 100 ft. - New agricultural projects only

☒ 200 ft. - All other projects

3. Total area of Riverfront Area on the site of the proposed project: not available square feet

4. Proposed alteration of the Riverfront Area:

0 a. total square feet | 0 b. square feet within 100 ft. | 0 c. square feet between 100 ft. and 200 ft.

5. Has an alternatives analysis been done and is it attached to this NOI? ☒ Yes ☐ No

6. Was the lot where the activity is proposed created prior to August 1, 1996? ☒ Yes ☐ No

3. ☐ Coastal Resource Areas: (See 310 CMR 10.25-10.35)

Check all that apply below. Attach narrative and supporting documentation describing how the project will meet all performance standards for each of the resource areas altered, including standards requiring consideration of alternative project design or location.

Online Users: Include your document transaction number (provided on your receipt page) with all supplementary information you submit to the Department.

Resource Area	Size of Proposed Alteration	Proposed Replacement (if any)
a. ☐ Designated Port Areas	Indicate size under Land Under the Ocean, below	
b. ☐ Land Under the Ocean	(1. square feet)	
	(2. cubic yards dredged)	
c. ☐ Barrier Beach	Indicate size under Coastal Beaches and/or Coastal Dunes below	
d. ☐ Coastal Beaches	(1. square feet)	(2. cubic yards beach nourishment)
e. ☐ Coastal Dunes	(1. square feet)	(2. cubic yards dune nourishment)

B. Buffer Zone & Resource Area Impacts (temporary & permanent) (cont'd)

	Size of Proposed Alteration	Proposed Replacement (if any)
f. ☐ Coastal Banks	1. linear feet	
g. ☐ Rocky Intertidal Shores	1. square feet	
h. ☐ Salt Marshes	1. square feet	2. sq ft restoration, rehab., creation
i. ☐ Land Under Salt Ponds	1. square feet 2. cubic yards dredged	
j. ☐ Land Containing Shellfish	1. square feet	
k. ☐ Fish Runs	Indicate size under Coastal Banks, inland Bank, Land Under the Ocean, and/or inland Land Under Waterbodies and Waterways, above 1. cubic yards dredged	
l. ☐ Land Subject to Coastal Storm Flowage	1. square feet	

4. ☐ Restoration/Enhancement
If the project is for the purpose of restoring or enhancing a wetland resource area in addition to the square footage that has been entered in Section B.2.b or B.3.h above, please enter the additional amount here.

a. square feet of BVW

b. square feet of Salt Marsh

5. ☐ Project Involves Stream Crossings

a. number of new stream crossings

b. number of replacement stream crossings

C. Other Applicable Standards and Requirements

Streamlined Massachusetts Endangered Species Act/Wetlands Protection Act Review

1. Is any portion of the proposed project located in **Estimated Habitat of Rare Wildlife** as indicated on the most recent Estimated Habitat Map of State-Listed Rare Wetland Wildlife published by the Natural Heritage and Endangered Species Program (NHESP)? To view habitat maps, see the *Massachusetts Natural Heritage Atlas* or go to http://www.mass.gov/dfwele/dfw/nhesp/regulatory_review/priority_habitat/online_viewer.htm.

a. ☐ Yes ☒ No **If yes, include proof of mailing or hand delivery of NOI to:**

Natural Heritage and Endangered Species Program
Division of Fisheries and Wildlife
Route 135, North Drive
Westborough, MA 01581

2010 (MassGIS)
b. Date of map

C. Other Applicable Standards and Requirements (cont'd)

If *yes*, the project is also subject to Massachusetts Endangered Species Act (MESA) review (321 CMR 10.18). To qualify for a streamlined, 30-day, MESA/Wetlands Protection Act review, please complete Section C.1.C, and include requested materials with this Notice of Intent (NOI); *OR* complete Section C.1.d, if applicable. *If MESA supplemental information is not included with the NOI, by completing Section 1 of this form, the NHESP will require a separate MESA filing which may take up to 90 days to review (unless noted exceptions in Section 2 apply, see below).*

1. c. Submit Supplemental Information for Endangered Species Review*

1. ☐ Percentage/acreage of property to be altered:

(a) within wetland Resource Area _____ percentage/acreage

(b) outside Resource Area _____ percentage/acreage

2. ☐ Assessor's Map or right-of-way plan of site

3. ☐ Project plans for entire project site, including wetland resource areas and areas outside of wetlands jurisdiction, showing existing and proposed conditions, existing and proposed tree/vegetation clearing line, and clearly demarcated limits of work **

(a) ☐ Project description (including description of impacts outside of wetland resource area & buffer zone)

(b) ☐ Photographs representative of the site

(c) ☐ MESA filing fee (fee information available at: http://www.mass.gov/dfwele/dfw/nhesp/regulatory_review/mesa/mesa_fee_schedule.htm). Make check payable to "Commonwealth of Massachusetts - NHESP" and ***mail to NHESP*** at above address

*Projects altering **10 or more acres** of land, also submit:*

(d) ☐ Vegetation cover type map of site

(e) ☐ Project plans showing Priority & Estimated Habitat boundaries

d. OR Check One of the Following

1. ☐ Project is exempt from MESA review.
Attach applicant letter indicating which MESA exemption applies. (See 321 CMR 10.14, http://www.mass.gov/dfwele/dfw/nhesp/regulatory_review/mesa/mesa_exemptions.htm; the NOI must still be sent to NHESP if the project is within estimated habitat pursuant to 310 CMR 10.37 and 10.59.)

2. ☐ Separate MESA review ongoing. _____ a. NHESP Tracking # _____ b. Date submitted to NHESP

---

* Some projects not in Estimated Habitat may be located in Priority Habitat, and require NHESP review (see http://www.mass.gov/dfwele/dfw/nhesp/nhesp.htm, regulatory review tab). Priority Habitat includes habitat for state-listed plants and strictly upland species not protected by the Wetlands Protection Act.

** MESA projects may not be segmented (321 CMR 10.16). The applicant must disclose full development plans even if such plans are not required as part of the Notice of Intent process.

C. Other Applicable Standards and Requirements (cont'd)

3. ☐ Separate MESA review completed.
Include copy of NHESP "no Take" determination or valid Conservation & Management Permit with approved plan.

2. For coastal projects only, is any portion of the proposed project located below the mean high water line or in a fish run?

a. ☒ Not applicable – project is in inland resource area only

b. ☐ Yes ☐ No If yes, include proof of mailing or hand delivery of NOI to either:

South Shore - Cohasset to Rhode Island, and the Cape & Islands:

Division of Marine Fisheries - Southeast Marine Fisheries Station
Attn: Environmental Reviewer
1213 Purchase Street – 3rd Floor
New Bedford, MA 02740-6694

North Shore - Hull to New Hampshire:

Division of Marine Fisheries - North Shore Office
Attn: Environmental Reviewer
30 Emerson Avenue
Gloucester, MA 01930

Also if yes, the project may require a Chapter 91 license. For coastal towns in the Northeast Region, please contact MassDEP's Boston Office. For coastal towns in the Southeast Region, please contact MassDEP's Southeast Regional Office.

3. Is any portion of the proposed project within an Area of Critical Environmental Concern (ACEC)?

a. ☐ Yes ☒ No If yes, provide name of ACEC (see instructions to WPA Form 3 or MassDEP Website for ACEC locations). **Note:** electronic filers click on Website.

b. ACEC

Online Users: Include your document transaction number (provided on your receipt page) with all supplementary information you submit to the Department.

4. Is any portion of the proposed project within an area designated as an Outstanding Resource Water (ORW) as designated in the Massachusetts Surface Water Quality Standards, 314 CMR 4.00?

a. ☐ Yes ☒ No

5. Is any portion of the site subject to a Wetlands Restriction Order under the Inland Wetlands Restriction Act (M.G.L. c. 131, § 40A) or the Coastal Wetlands Restriction Act (M.G.L. c. 130, § 105)?

a. ☐ Yes ☒ No

6. Is this project subject to provisions of the MassDEP Stormwater Management Standards?

a. ☒ Yes. Attach a copy of the Stormwater Report as required by the Stormwater Management Standards per 310 CMR 10.05(6)(k)-(q) and check if:

1. ☐ Applying for Low Impact Development (LID) site design credits (as described in Stormwater Management Handbook Vol. 2, Chapter 3)

2. ☐ A portion of the site constitutes redevelopment

3. ☐ Proprietary BMPs are included in the Stormwater Management System.

b. ☐ No. Check why the project is exempt:

1. ☐ Single-family house

C. Other Applicable Standards and Requirements (cont'd)

2. ☐ Emergency road repair
3. ☐ Small Residential Subdivision (less than or equal to 4 single-family houses or less than or equal to 4 units in multi-family housing project) with no discharge to Critical Areas.

D. Additional Information

Applicants must include the following with this Notice of Intent (NOI). See instructions for details.

Online Users: Attach the document transaction number (provided on your receipt page) for any of the following information you submit to the Department.

1. ☒ USGS or other map of the area (along with a narrative description, if necessary) containing sufficient information for the Conservation Commission and the Department to locate the site. (Electronic filers may omit this item.)
2. ☒ Plans identifying the location of proposed activities (including activities proposed to serve as a Bordering Vegetated Wetland [BVW] replication area or other mitigating measure) relative to the boundaries of each affected resource area.
3. ☒ Identify the method for BVW and other resource area boundary delineations (MassDEP BVW Field Data Form(s), Determination of Applicability, Order of Resource Area Delineation, etc.), and attach documentation of the methodology.
4. ☒ List the titles and dates for all plans and other materials submitted with this NOI.

a. Plan Title

b. Prepared By | c. Signed and Stamped by

d. Final Revision Date | e. Scale

f. Additional Plan or Document Title | g. Date

5. ☐ If there is more than one property owner, please attach a list of these property owners not listed on this form.
6. ☐ Attach proof of mailing for Natural Heritage and Endangered Species Program, if needed.
7. ☐ Attach proof of mailing for Massachusetts Division of Marine Fisheries, if needed.
8. ☐ Attach NOI Wetland Fee Transmittal Form
9. ☐ Attach Stormwater Report, if needed.

Massachusetts Department of Environmental Protection
Bureau of Resource Protection - Wetlands

WPA Form 3 – Notice of Intent

Massachusetts Wetlands Protection Act M.G.L. c. 131, §40

Provided by MassDEP:

MassDEP File Number

Document Transaction Number

Acton
City/Town

E. Fees

1. ☒ Fee Exempt: No filing fee shall be assessed for projects of any city, town, county, or district of the Commonwealth, federally recognized Indian tribe housing authority, municipal housing authority, or the Massachusetts Bay Transportation Authority.

Applicants must submit the following information (in addition to pages 1 and 2 of the NOI Wetland Fee Transmittal Form) to confirm fee payment:

2. Municipal Check Number	3. Check date
4. State Check Number	5. Check date
6. Payor name on check: First Name	7. Payor name on check: Last Name

F. Signatures and Submittal Requirements

I hereby certify under the penalties of perjury that the foregoing Notice of Intent and accompanying plans, documents, and supporting data are true and complete to the best of my knowledge. I understand that the Conservation Commission will place notification of this Notice in a local newspaper at the expense of the applicant in accordance with the wetlands regulations, 310 CMR 10.05(5)(a).

I further certify under penalties of perjury that all abutters were notified of this application, pursuant to the requirements of M.G.L. c. 131, § 40. Notice must be made by Certificate of Mailing or in writing by hand delivery or certified mail (return receipt requested) to all abutters within 100 feet of the property line of the project location.

[illegible], Director of Facilities ABS 1. Signature of Applicant	11/30/10 2. Date
3. Signature of Property Owner (if different)	4. Date
[illegible] 5. Signature of Representative (if any)	11/30/10 6. Date

For Conservation Commission:
Two copies of the completed Notice of Intent (Form 3), including supporting plans and documents, two copies of the NOI Wetland Fee Transmittal Form, and the city/town fee payment, to the Conservation Commission by certified mail or hand delivery.

For MassDEP:
One copy of the completed Notice of Intent (Form 3), including supporting plans and documents, one copy of the NOI Wetland Fee Transmittal Form, and a **copy** of the state fee payment to the MassDEP Regional Office (see Instructions) by certified mail or hand delivery.

Other:
If the applicant has checked the "yes" box in any part of Section C, Item 3, above, refer to that section and the Instructions for additional submittal requirements.

The original and copies must be sent simultaneously. Failure by the applicant to send copies in a timely manner may result in dismissal of the Notice of Intent.

Massachusetts Department of Environmental Protection
Bureau of Resource Protection - Wetlands Program

Checklist for Stormwater Report

A. Introduction

Important: When filling out forms on the computer, use only the tab key to move your cursor - do not use the return key.

A Stormwater Report must be submitted with the Notice of Intent permit application to document compliance with the Stormwater Management Standards. The following checklist is NOT a substitute for the Stormwater Report (which should provide more substantive and detailed information) but is offered here as a tool to help the applicant organize their Stormwater Management documentation for their Report and for the reviewer to assess this information in a consistent format. As noted in the Checklist, the Stormwater Report must contain the engineering computations and supporting information set forth in Volume 3 of the Massachusetts Stormwater Handbook. The Stormwater Report must be prepared and certified by a Registered Professional Engineer (RPE) licensed in the Commonwealth.

The Stormwater Report must include:

- The Stormwater Checklist completed and stamped by a Registered Professional Engineer (see page 2) that certifies that the Stormwater Report contains all required submittals.[1] This Checklist is to be used as the cover for the completed Stormwater Report.
- Applicant/Project Name
- Project Address
- Name of Firm and Registered Professional Engineer that prepared the Report
- Long-Term Pollution Prevention Plan required by Standards 4-6
- Construction Period Pollution Prevention and Erosion and Sedimentation Control Plan required by Standard 8[2]
- Operation and Maintenance Plan required by Standard 9

In addition to all plans and supporting information, the Stormwater Report must include a brief narrative describing stormwater management practices, including environmentally sensitive site design and LID techniques, along with a diagram depicting runoff through the proposed BMP treatment train. Plans are required to show existing and proposed conditions, identify all wetland resource areas, NRCS soil types, critical areas, Land Uses with Higher Potential Pollutant Loads (LUHPPL), and any areas on the site where infiltration rate is greater than 2.4 inches per hour. The Plans shall identify the drainage areas for both existing and proposed conditions at a scale that enables verification of supporting calculations.

As noted in the Checklist, the Stormwater Management Report shall document compliance with each of the Stormwater Management Standards as provided in the Massachusetts Stormwater Handbook. The soils evaluation and calculations shall be done using the methodologies set forth in Volume 3 of the Massachusetts Stormwater Handbook.

To ensure that the Stormwater Report is complete, applicants are required to fill in the Stormwater Report Checklist by checking the box to indicate that the specified information has been included in the Stormwater Report. If any of the information specified in the checklist has not been submitted, the applicant must provide an explanation. The completed Stormwater Report Checklist and Certification must be submitted with the Stormwater Report.

---

[1] The Stormwater Report may also include the Illicit Discharge Compliance Statement required by Standard 10. If not included in the Stormwater Report, the Illicit Discharge Compliance Statement must be submitted prior to the discharge of stormwater runoff to the post-construction best management practices.

[2] For some complex projects, it may not be possible to include the Construction Period Erosion and Sedimentation Control Plan in the Stormwater Report. In that event, the issuing authority has the discretion to issue an Order of Conditions that approves the project and includes a condition requiring the proponent to submit the Construction Period Erosion and Sedimentation Control Plan before commencing any land disturbance activity on the site.

Massachusetts Department of Environmental Protection
Bureau of Resource Protection - Wetlands Program

Checklist for Stormwater Report

B. Stormwater Checklist and Certification

The following checklist is intended to serve as a guide for applicants as to the elements that ordinarily need to be addressed in a complete Stormwater Report. The checklist is also intended to provide conservation commissions and other reviewing authorities with a summary of the components necessary for a comprehensive Stormwater Report that addresses the ten Stormwater Standards.

Note: Because stormwater requirements vary from project to project, it is possible that a complete Stormwater Report may not include information on some of the subjects specified in the Checklist. If it is determined that a specific item does not apply to the project under review, please note that the item is not applicable (N.A.) and provide the reasons for that determination.

A complete checklist must include the Certification set forth below signed by the Registered Professional Engineer who prepared the Stormwater Report.

Registered Professional Engineer's Certification

I have reviewed the Stormwater Report, including the soil evaluation, computations, Long-term Pollution Prevention Plan, the Construction Period Erosion and Sedimentation Control Plan (if included), the Long-term Post-Construction Operation and Maintenance Plan, the Illicit Discharge Compliance Statement (if included) and the plans showing the stormwater management system, and have determined that they have been prepared in accordance with the requirements of the Stormwater Management Standards as further elaborated by the Massachusetts Stormwater Handbook. I have also determined that the information presented in the Stormwater Checklist is accurate and that the information presented in the Stormwater Report accurately reflects conditions at the site as of the date of this permit application.

Registered Professional Engineer Block and Signature

COMMONWEALTH OF MASSACHUSETTS
RICHARD E. DOHERTY
CIVIL
No. 36427
REGISTERED PROFESSIONAL ENGINEER

REDoherty

Signature and Date

Nov. 16, 2010

Checklist

Project Type: Is the application for new development, redevelopment, or a mix of new and redevelopment?

☐ New development

☐ Redevelopment

☒ Mix of New Development and Redevelopment

Checklist for Stormwater Report

Checklist (continued)

LID Measures: Stormwater Standards require LID measures to be considered. Document what environmentally sensitive design and LID Techniques were considered during the planning and design of the project:

- ☐ No disturbance to any Wetland Resource Areas
- ☐ Site Design Practices (e.g. clustered development, reduced frontage setbacks)
- ☐ Reduced Impervious Area (Redevelopment Only)
- ☒ Minimizing disturbance to existing trees and shrubs
- ☐ LID Site Design Credit Requested:
  - ☐ Credit 1
  - ☐ Credit 2
  - ☐ Credit 3
- ☐ Use of "country drainage" versus curb and gutter conveyance and pipe
- ☐ Bioretention Cells (includes Rain Gardens)
- ☐ Constructed Stormwater Wetlands (includes Gravel Wetlands designs)
- ☐ Treebox Filter
- ☐ Water Quality Swale
- ☐ Grass Channel
- ☐ Green Roof
- ☒ Other (describe): No new impervious area; LID not pertinent to boardwalk/dock

Standard 1: No New Untreated Discharges

- ☒ No new untreated discharges
- ☐ Outlets have been designed so there is no erosion or scour to wetlands and waters of the Commonwealth
- ☐ Supporting calculations specified in Volume 3 of the Massachusetts Stormwater Handbook included.

Checklist for Stormwater Report

Checklist (continued)

Standard 2: Peak Rate Attenuation

☐ Standard 2 waiver requested because the project is located in land subject to coastal storm flowage and stormwater discharge is to a wetland subject to coastal flooding.

☒ Evaluation provided to determine whether off-site flooding increases during the 100-year 24-hour storm.

☐ Calculations provided to show that post-development peak discharge rates do not exceed pre-development rates for the 2-year and 10-year 24-hour storms. If evaluation shows that off-site flooding increases during the 100-year 24-hour storm, calculations are also provided to show that post-development peak discharge rates do not exceed pre-development rates for the 100-year 24-hour storm.

Standard 3: Recharge

☐ Soil Analysis provided.

☐ Required Recharge Volume calculation provided.

☐ Required Recharge volume reduced through use of the LID site Design Credits.

☐ Sizing the infiltration, BMPs is based on the following method: Check the method used.

☐ Static ☐ Simple Dynamic ☐ Dynamic Field[1]

☐ Runoff from all impervious areas at the site discharging to the infiltration BMP.

☐ Runoff from all impervious areas at the site is *not* discharging to the infiltration BMP and calculations are provided showing that the drainage area contributing runoff to the infiltration BMPs is sufficient to generate the required recharge volume.

☐ Recharge BMPs have been sized to infiltrate the Required Recharge Volume.

☐ Recharge BMPs have been sized to infiltrate the Required Recharge Volume *only* to the maximum extent practicable for the following reason:

- ☐ Site is comprised solely of C and D soils and/or bedrock at the land surface
- ☐ M.G.L. c. 21E sites pursuant to 310 CMR 40.0000
- ☐ Solid Waste Landfill pursuant to 310 CMR 19.000
- ☐ Project is otherwise subject to Stormwater Management Standards only to the maximum extent practicable.

☐ Calculations showing that the infiltration BMPs will drain in 72 hours are provided.

☐ Property includes a M.G.L. c. 21E site or a solid waste landfill and a mounding analysis is included.

[1] 80% TSS removal is required prior to discharge to infiltration BMP if Dynamic Field method is used.

Checklist for Stormwater Report

Checklist (continued)

Standard 3: Recharge (continued)

☐ The infiltration BMP is used to attenuate peak flows during storms greater than or equal to the 10-year 24-hour storm and separation to seasonal high groundwater is less than 4 feet and a mounding analysis is provided.

☐ Documentation is provided showing that infiltration BMPs do not adversely impact nearby wetland resource areas.

Standard 4: Water Quality

The Long-Term Pollution Prevention Plan typically includes the following:

- Good housekeeping practices;
- Provisions for storing materials and waste products inside or under cover;
- Vehicle washing controls;
- Requirements for routine inspections and maintenance of stormwater BMPs;
- Spill prevention and response plans;
- Provisions for maintenance of lawns, gardens, and other landscaped areas;
- Requirements for storage and use of fertilizers, herbicides, and pesticides;
- Pet waste management provisions;
- Provisions for operation and management of septic systems;
- Provisions for solid waste management;
- Snow disposal and plowing plans relative to Wetland Resource Areas;
- Winter Road Salt and/or Sand Use and Storage restrictions;
- Street sweeping schedules;
- Provisions for prevention of illicit discharges to the stormwater management system;
- Documentation that Stormwater BMPs are designed to provide for shutdown and containment in the event of a spill or discharges to or near critical areas or from LUHPPL;
- Training for staff or personnel involved with implementing Long-Term Pollution Prevention Plan;
- List of Emergency contacts for implementing Long-Term Pollution Prevention Plan.

☒ A Long-Term Pollution Prevention Plan is attached to Stormwater Report and is included as an attachment to the Wetlands Notice of Intent.

☐ Treatment BMPs subject to the 44% TSS removal pretreatment requirement and the one inch rule for calculating the water quality volume are included, and discharge:

- ☐ is within the Zone II or Interim Wellhead Protection Area
- ☐ is near or to other critical areas
- ☐ is within soils with a rapid infiltration rate (greater than 2.4 inches per hour)
- ☐ involves runoff from land uses with higher potential pollutant loads.

☐ The Required Water Quality Volume is reduced through use of the LID site Design Credits.

☐ Calculations documenting that the treatment train meets the 80% TSS removal requirement and, if applicable, the 44% TSS removal pretreatment requirement, are provided.

Checklist for Stormwater Report

Checklist (continued)

Standard 4: Water Quality (continued)

☐ The BMP is sized (and calculations provided) based on:

- ☐ The ½" or 1" Water Quality Volume or
- ☐ The equivalent flow rate associated with the Water Quality Volume and documentation is provided showing that the BMP treats the required water quality volume.

☐ The applicant proposes to use proprietary BMPs, and documentation supporting use of proprietary BMP and proposed TSS removal rate is provided. This documentation may be in the form of the propriety BMP checklist found in Volume 2, Chapter 4 of the Massachusetts Stormwater Handbook and submitting copies of the TARP Report, STEP Report, and/or other third party studies verifying performance of the proprietary BMPs.

☐ A TMDL exists that indicates a need to reduce pollutants other than TSS and documentation showing that the BMPs selected are consistent with the TMDL is provided.

Standard 5: Land Uses With Higher Potential Pollutant Loads (LUHPPLs)

☐ The NPDES Multi-Sector General Permit covers the land use and the Stormwater Pollution Prevention Plan (SWPPP) has been included with the Stormwater Report.

☐ The NPDES Multi-Sector General Permit covers the land use and the SWPPP will be submitted ***prior to*** the discharge of stormwater to the post-construction stormwater BMPs.

☐ The NPDES Multi-Sector General Permit does ***not*** cover the land use.

☐ LUHPPLs are located at the site and industry specific source control and pollution prevention measures have been proposed to reduce or eliminate the exposure of LUHPPLs to rain, snow, snow melt and runoff, and been included in the long term Pollution Prevention Plan.

☐ All exposure has been eliminated.

☐ All exposure has ***not*** been eliminated and all BMPs selected are on MassDEP LUHPPL list.

☐ The LUHPPL has the potential to generate runoff with moderate to higher concentrations of oil and grease (e.g. all parking lots with >1000 vehicle trips per day) and the treatment train includes an oil grit separator, a filtering bioretention area, a sand filter or equivalent.

Standard 6: Critical Areas

☐ The discharge is near or to a critical area and the treatment train includes only BMPs that MassDEP has approved for stormwater discharges to or near that particular class of critical area.

☐ Critical areas and BMPs are identified in the Stormwater Report.

Checklist for Stormwater Report

Checklist (continued)

Standard 7: Redevelopments and Other Projects Subject to the Standards only to the maximum extent practicable

☒ The project is subject to the Stormwater Management Standards only to the maximum Extent Practicable as a:

- ☒ Limited Project
- ☐ Small Residential Projects: 5-9 single family houses or 5-9 units in a multi-family development provided there is no discharge that may potentially affect a critical area.
- ☐ Small Residential Projects: 2-4 single family houses or 2-4 units in a multi-family development with a discharge to a critical area
- ☐ Marina and/or boatyard provided the hull painting, service and maintenance areas are protected from exposure to rain, snow, snow melt and runoff
- ☒ Bike Path and/or Foot Path
- ☒ Redevelopment Project
- ☐ Redevelopment portion of mix of new and redevelopment.

☒ Certain standards are not fully met (Standard No. 1, 8, 9, and 10 must always be fully met) and an explanation of why these standards are not met is contained in the Stormwater Report.

☐ The project involves redevelopment and a description of all measures that have been taken to improve existing conditions is provided in the Stormwater Report. The redevelopment checklist found in Volume 2 Chapter 3 of the Massachusetts Stormwater Handbook may be used to document that the proposed stormwater management system (a) complies with Standards 2, 3 and the pretreatment and structural BMP requirements of Standards 4-6 to the maximum extent practicable and (b) improves existing conditions.

Standard 8: Construction Period Pollution Prevention and Erosion and Sedimentation Control

A Construction Period Pollution Prevention and Erosion and Sedimentation Control Plan must include the following information:

- Narrative;
- Construction Period Operation and Maintenance Plan;
- Names of Persons or Entity Responsible for Plan Compliance;
- Construction Period Pollution Prevention Measures;
- Erosion and Sedimentation Control Plan Drawings;
- Detail drawings and specifications for erosion control BMPs, including sizing calculations;
- Vegetation Planning;
- Site Development Plan;
- Construction Sequencing Plan;
- Sequencing of Erosion and Sedimentation Controls;
- Operation and Maintenance of Erosion and Sedimentation Controls;
- Inspection Schedule;
- Maintenance Schedule;
- Inspection and Maintenance Log Form.

☒ A Construction Period Pollution Prevention and Erosion and Sedimentation Control Plan containing the information set forth above has been included in the Stormwater Report.

Checklist for Stormwater Report

Checklist (continued)

Standard 8: Construction Period Pollution Prevention and Erosion and Sedimentation Control (continued)

☐ The project is highly complex and information is included in the Stormwater Report that explains why it is not possible to submit the Construction Period Pollution Prevention and Erosion and Sedimentation Control Plan with the application. A Construction Period Pollution Prevention and Erosion and Sedimentation Control has ***not*** been included in the Stormwater Report but will be submitted ***before*** land disturbance begins.

☒ The project is ***not*** covered by a NPDES Construction General Permit.

☐ The project is covered by a NPDES Construction General Permit and a copy of the SWPPP is in the Stormwater Report.

☐ The project is covered by a NPDES Construction General Permit but no SWPPP been submitted. The SWPPP will be submitted BEFORE land disturbance begins.

Standard 9: Operation and Maintenance Plan

☒ The Post Construction Operation and Maintenance Plan is included in the Stormwater Report and includes the following information:

- ☐ Name of the stormwater management system owners;
- ☒ Party responsible for operation and maintenance;
- ☒ Schedule for implementation of routine and non-routine maintenance tasks;
- ☐ Plan showing the location of all stormwater BMPs maintenance access areas;
- ☐ Description and delineation of public safety features;
- ☐ Estimated operation and maintenance budget; and
- ☐ Operation and Maintenance Log Form.

☐ The responsible party is ***not*** the owner of the parcel where the BMP is located and the Stormwater Report includes the following submissions:

- ☐ A copy of the legal instrument (deed, homeowner's association, utility trust or other legal entity) that establishes the terms of and legal responsibility for the operation and maintenance of the project site stormwater BMPs;
- ☐ A plan and easement deed that allows site access for the legal entity to operate and maintain BMP functions.

Standard 10: Prohibition of Illicit Discharges

☐ The Long-Term Pollution Prevention Plan includes measures to prevent illicit discharges;

☐ An Illicit Discharge Compliance Statement is attached;

☒ NO Illicit Discharge Compliance Statement is attached but will be submitted ***prior to*** the discharge of any stormwater to post-construction BMPs.

1.0 Introduction

The West Acton Boardwalk is generally located between Elm Street and Arlington Street in Acton MA (Figure 1). Figure 2 shows an aerial photograph of the boardwalk from 2005. Photographs in Attachment B also show site conditions. The site of the West Acton Boardwalk is used by an estimated 7,000 residents as a pedestrian pathway, nature trail and recreational resource. The structure spans the Fort Pond Brook and connects the Indian Village neighborhood and Douglas Elementary School area with the West Acton and Gates Elementary area. The presence of a boardwalk promotes healthy outdoor lifestyles and the preservation of open space and pathways.

Originally, Fort Pond Brook was seasonally traversed at the proposed project site by a dirt foot path, which was frequently muddy and led to gradual widening of the wetlands path via trampling of the wetland area. It is a natural occurrence as pedestrians attempt to navigate the area and avoid muddy spots, unknowingly destroying the area they have come to enjoy. In 1989 a group of citizens were permitted to build the original boardwalk in an attempt to reduce desire lines created by foot traffic through the wetlands. The boardwalk consisted of a mainline portion and a spur portion which leads to an observation deck, both of which are visible in Figure 2.

Working with the property owner, Acton Public Schools, the Friends of the West Acton Boardwalk is a group of parents, educators, and concerned citizens who want to avoid this inevitable fate that would result from dismantling and abandoning the existing structure which can no longer stand as a viable pathway in its current state. Until recently, the connecting section of the boardwalk was in gross disrepair, frequently impassable, and had deteriorated to a point where leaving it in an abandoned limbo presents a hazard and potential liability for the town. The repair and replacement of the connecting section of the boardwalk was accomplished in the summer of 2010, under a Determination of Applicability issued by the Acton Conservation Commission (ACC; July 26, 2010). A portion of this new boardwalk is shown in Photo 5 of Attachment B.

At this time, Acton Public Schools is filing a Notice of Intent for three additional project phases:

- Repair and replacement of Observation Deck
- Installation of a new floating dock
- Construction of access to Kid Island

2.0 Existing Conditions

The West Acton Boardwalk crosses Fort Pond Brook and its associated wetlands. The main features in the vicinity of the boardwalk include Fort Pond Brook, a pond, and Kid Island, as identified on Figure 2. Wetland resource areas in the vicinity of the boardwalk include Bordering Vegetated Wetlands, the Bank and Land Under Water Bodies and Waterways of Fort Pond Brook and the associated pond, the 100-year floodplain (Bordering Land Subject to Flooding) and the Riverfront Area from the perennial Fort Pond Brook. There are no Vernal Pools, Isolated Land Subject to Flooding or Isolated Vegetated Wetlands (as may be federally regulated) at the site.

Bordering Vegetated Wetlands (BVW). In the vicinity of the boardwalk, the Bordering Vegetated Wetlands (BVW) are mostly emergent vegetation, dominanted by jewelweed (*Impatiens capensis*), cattail (*Typha latifolia*), and purple loosestrife (*Lythrum salicaria*), with a diverse mix of other emergent species including soft rush (*Juncus effusus*), woolgrass (*Scirpus cyperinus*), sensitive fern (*Onoclea sensibilis*) royal fern (*Onoclea regalis*), tearthumb (*Polygonum sagittatum*). Scrub/shrub vegetation is also present, including silky dogwood (*Cornus amomum*), sweet gale (*Myrica gale*), buckthorn (*Rhamnus cathartica*), rough alder (*Alnus rugosa*), buttonbush (*Cephalantus occidentalis*), shadbush (*Amelanchier canadensis*) and arrowwood (*Viburnum dentatum*). The scrub/shrub vegetation is most prevalent around the base of Kid Island.

Bank and Land Under Water Bodies and Waterways (LUWW). The banks of Fort Pond Brook and the associated pond are well defined. The banks of the brook are relatively steep, while the banks of the pond, especially where they parallel the boardwalk, are gentler. The banks appear stable, although portions of the pond banks along the boardwalk have been trampled, particularly where the floating dock is proposed). In this particular area, three culverts have been laid across the old footpath (partially buried under the newly reconstructed boardwalk) as part of past attempts to equalize the flood water levels on other side of the footpath.

Bordering Land Subject to Flooding (BLSF). The 100-year floodplain is shown in Figure 3. In the vicinity of the boardwalk, the floodplain is at approximately elevation 205 feet. The 100-year flood is mapped as occurring almost to the buildings of both the Gates and Douglas schools.

Riverfront Area. As a perennial stream, Fort Pond Brook has an associated 200-foot Riverfront Area from the Mean Annual High Water. The three project areas currently being reviewed (observation deck, floating dock and Kid Island Access) are all within the Riverfront Area. As indicated in Section 310 CMR 10.58(6)(b), unpaved pedestrian walkways are a minor activity exempt from the Riverfront Area provisions.

3.0 Proposed Action and Impacts

The proposed action includes three components: repair and restoration of the observation deck, installation of a new floating dock, and construction of a new access to Kid Island. Work would be proposed for low flow periods during the summer. The three components may be built at the same time or separately as they are not interdependent.

Repair and Restoration of Observation Deck. Photo 1 of Attachment B shows this area. Similar to the previously approved repair and restoration of the connecting section of the boardwalk, this portion of work will be accomplished using the existing footings already in place. To accomplish this project, there will be no disturbance of the substrate or digging any new footings below grade. The current structure that is simply resting on the footings will be removed. A riser will then be placed on the concrete footings attaching it with a bracket and bolt method to elevate the walkway a minimum of 18 inches above grade to allow water to flow under the boardwalk. The highest point above grade (at the observation deck) will be approximately three feet. Stringers will then be run across the risers and then deck on top the stringers. Materials to accomplish this work may consist of steel I beam risers, galvanized bolts and brackets, pressure treated lumber, and trex composite type of decking for the finish walking surface. While this work is being accomplished, trash that may have accumulated under the existing observation deck will be removed. This part of the project will not alter wetlands or drainage patterns. Raising the elevation of the deck will, in fact, improve drainage to some degree. Minimal vegetation cutting and/or trampling may occur during construction, but this vegetation will quickly re-establish.

Floating Dock. The floating dock is proposed to allow students access to the pond in order to carry out observations and water sampling. In the past, this practice has led to trampling of wetland vegetation and soils, and construction of the floating dock will stop this impact. The dock will include a gangway, approximately nine feet long, which will lead from the connecting section of the boardwalk down to the water level, where the floating dock will be attached. The proposed dock, as shown in the plans, will consist of a "low profile" modular system, the top of which will be approximately 8-inches above the water elevation. The dock modules are approximately 4 x 5 feet, and it is anticipated that two modules will be used, although that will be subject to funding. The top of the gangway, at the connecting section of the boardwalk, will require placement of a concrete footing for support. This footing, as shown on the plans, will be approximately 18 inches deep and 18 inches square. The hole for this footing will be dug by hand. After the concrete is poured and the hole backfilled, any remaining material will be removed from the site. The disturbed area will be minimal. Disturbed soils that are left after construction will be raked and seeded with an annual seed mix to stabilize the soils. Given the seed source from the adjacent wetlands, it is expected that wetland vegetation will quickly re-establish itself. Digging will occur during low flow periods. Minimal vegetation cutting and/or trampling may occur during construction; for the most part the vegetation in this area is grassy, with many unvegetated/trampled areas (see Photos 2 and 3 of

Attachment B). The culverts in this area will also be removed. The gangway and dock will be removed in the winter and stored near the Douglas playground.

Kid Island Access. Currently, there is a deeply trampled dirt access from the boardwalk, through a low, unvegetated area that is flooded for much of the year, and then up the hill to Kid Island (see Photo 4 of Attachment B). In order to avoid the trampling and to allow year-round access to Kid Island, a small bridge is proposed. This bridge is currently envisioned as being approximately twenty feet long (in order to span the low area) and will require two new footings. These will be dug as described for the gangway footing. Construction of this bridge will mostly occur over unvegetated/trampled areas. However, it is likely that some vegetation cutting will be required, including 1-2 shrubs (buckthorn, arrowwood and/or shadbush).

These three components will have insignificant temporary or permanent wetland resource area impacts. The observation deck piece will not change existing conditions. Raising the decking may marginally increase the amount of sunshine under the deck. The floating dock and Kid Island access will shade some areas of wetlands, but these areas are currently mostly disturbed or open water and, as such, there will be negligible impact. Ground contours will not be changed and flow patterns or flood storage will not be altered.

4.0 Mitigation

The proposed projects will have minimal impacts and, as such, require minimal mitigation. Mitigation measures that are proposed are discussed below.

Erosion Control. Erosion control will not be necessary for most of the project components. Digging the footings for the gangway and for the Kid Island bridge will expose some soils, although neither of these areas are in high water velocity environments. This will occur when the water levels are low. Should it be expected to rain while the footings are exposed, a tarp or other cover will be placed so that sedimentation will not occur.

Construction Sequencing. The three project components may occur together or individually, depending on how fund raising proceeds. The observation deck will begin with demolition of the existing deck and then rebuilding the new deck. The floating dock would begin with the foundations. The gangway and dock are modular components that will be carried in. The Kid Island bridge would begin with placement of the footings, construction of the supports, and then installing the decking. As indicated previously, construction is expected to occur during low flow periods of the summer.

Stormwater Management. The Stormwater Management Standards indicate that they apply to paths only to the extent practicable. The ten standards of the stormwater are largely not applicable to a project such as a boardwalk for the following reasons:

- A boardwalk is not impervious in the usual sense of the word; the spaces between the boards and the relatively small width means that rainfall wills till reach the ground immediately below the boardwalk without running off to adjacent areas at a greater rate;

- Wetlands and water, such as over which the proposed boardwalk/dock will occur, already have the same CN number (98) as impervious material;

- The wetland is the end receptor of the runoff, and it will not receive any more or less runoff (rate or volume) than before the boardwalk;

- The project will not be affecting grades and, as such, will not be altering runoff patterns

Nevertheless, the Checklist for Stormwater Report is attached to this Notice of Intent, and the following text briefly describes applicability of, and compliance with, the ten standards. No Low Impact Development (LID) measures are proposed as the project will not alter infiltration or runoff rates.

Standard 1: No New Untreated Discharges. This standard will be met as none of the three components will create new discharges of any sort

Standard 2: Peak Rate Attenuation. As explained above, the project will not change runoff rates and, as such, no peak rate attenuation is required.

Standard 3: Recharge. The project will not be changing infiltration rates because rainfall will continue to reach the wetland soils and open water as it does under current conditions. The wetland soils have a CN value of 98.

Standard 4: Water Quality. The project will not be creating any surfaces that require water quality treatment. The Long Term Pollution Prevention Plan is *de minimus*. The materials that have been chosen will not require treatment or painting. Maintenance, such as replacement of boards, will be conducted by the Acton School System. The dock and gangway will be removed every year prior to the water freezing to maintain the life cycle of the materials, although it is not required that they be removed. No treatment Best Management Practices (BMPs) are required as the project will not create any potential pollutants.

Standard 5: Land Uses with Higher Potential Pollutant Loads. The proposed land use is not one with a higher potential pollutant load.

Standard 6: Critical Areas. The project is not in a critical area.

Standard 7: Redevelopments and Other Projects Subject to the Standards Only to the Maximum Extent Practicable. This project is subject to the standards only to the maximum extent practicable as it is partially a redevelopment project (observation deck repair and replacement), a limited project under the MAWPA regulations (310 10.53[3][j]), and a footpath as recognized under the Stormwater Management Standards. All of the standards are met and/or do not apply.

Stamdard 8: Construction Period Pollution Prevention and Erosion and Sedimentation Control. Given the nature of this project, only minor construction period pollution prevention and erosion and sedimentation control is warranted. No potential pollutants, such as gas for refueling or paint, will be brought into the wetlands for construction. Erosion and sedimentation control is only needed for the limited time during which the footings for the gangway and the Kids Island bridge are being poured, and this will be accomplshed by covering the disturbed soils with a tarp should it rain. Because there are no BMPs, no maintenance schedules, logs or reporting forms are applicable. Construction sequencing was discussed in the previous section of this NOI. The responsible party will be the Acton Public Schools.

Standard 9: Operation and Maintenance Plan. As with Standard 8, the project does not warrant a substantial operation and maintenance plan. The features will not require routine maintenance, such as staining or painting. The gangway and dock will be removed on a yearly basis and stored near the Douglas playground, and at that time it will be inspected for necessary repairs. At the same time, and as on ongoing basis, the rest of the boardwalk will be periodically inspected by the Acton Public Schools for maintenance needs such as loose boards and possibly trash removal. There are no stormwater systems.

Standard 10: Prohibition of Illicit Discharges. The project will not create any new discharges, nor will it create the possibility of illicit discharges as there will be no stormwater systems.

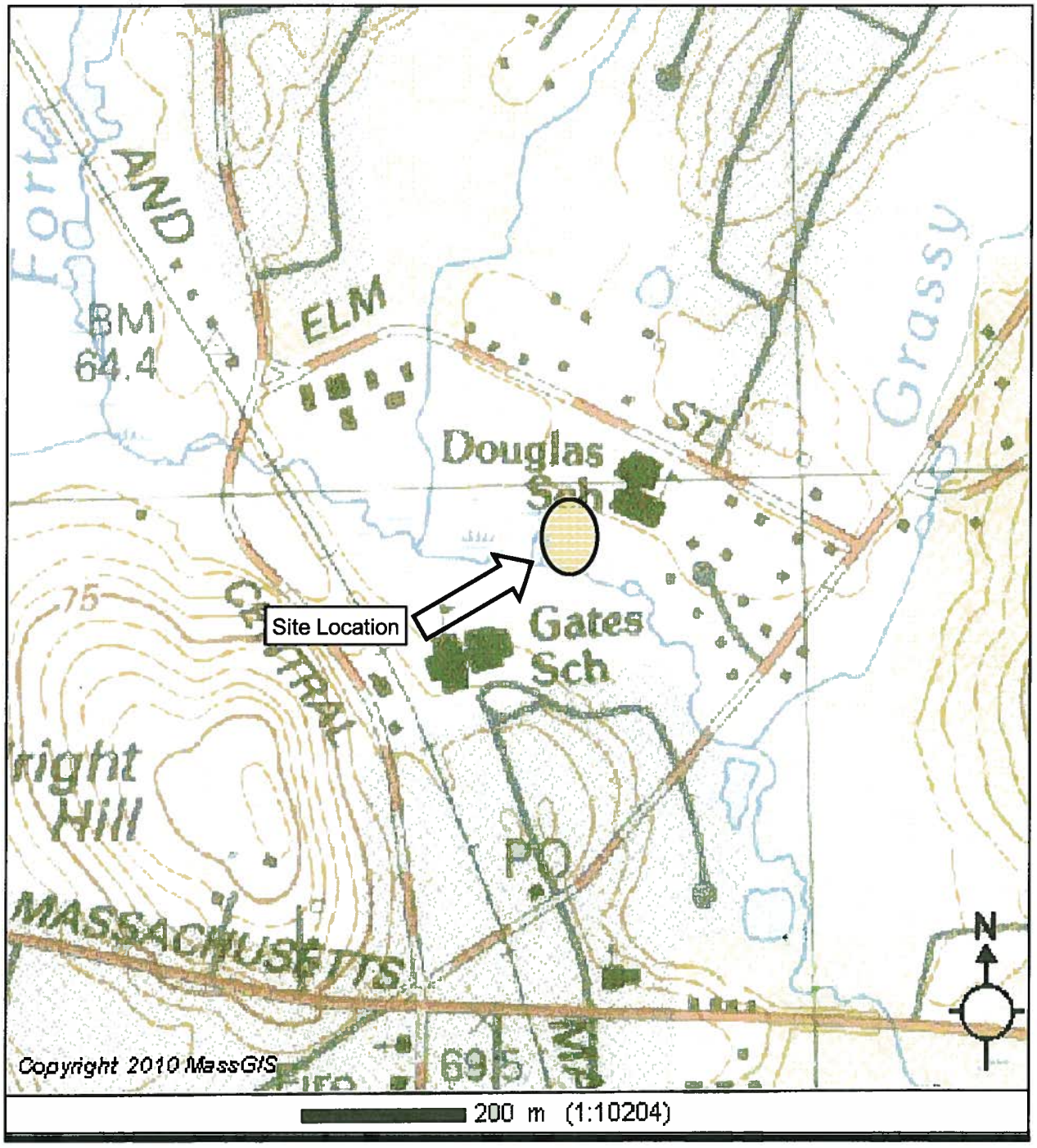

Source: MassGIS

West Acton Boardwalk
Acton, MA

Site Location

AMY GREEN ENVIRONMENTAL CONSULTING, LLC

Figure 1

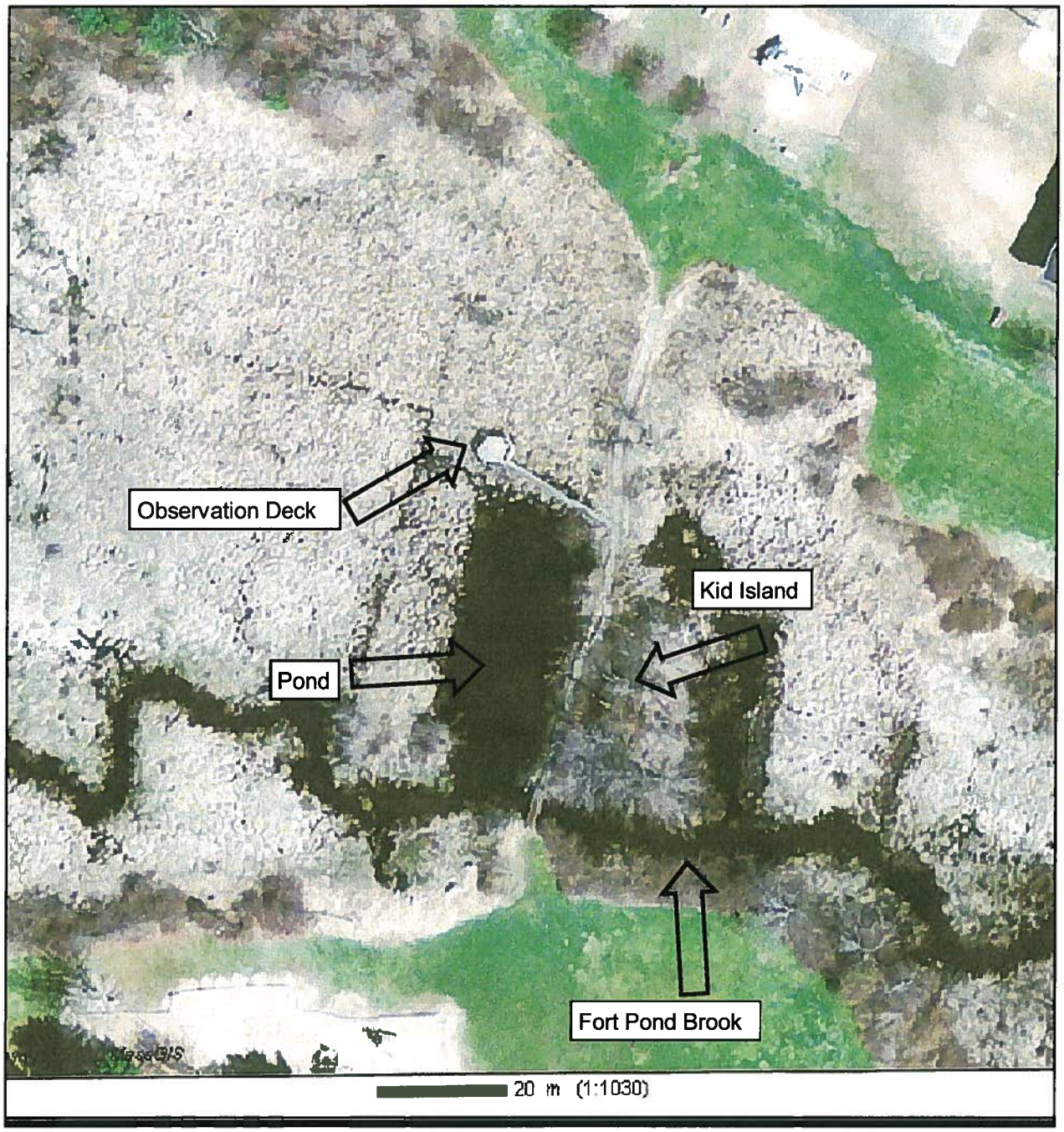

Source: MassGIS

West Acton Boardwalk
Acton, MA

2008 Aerial Photograph

AMY GREEN ENVIRONMENTAL CONSULTING, LLC

Figure 2

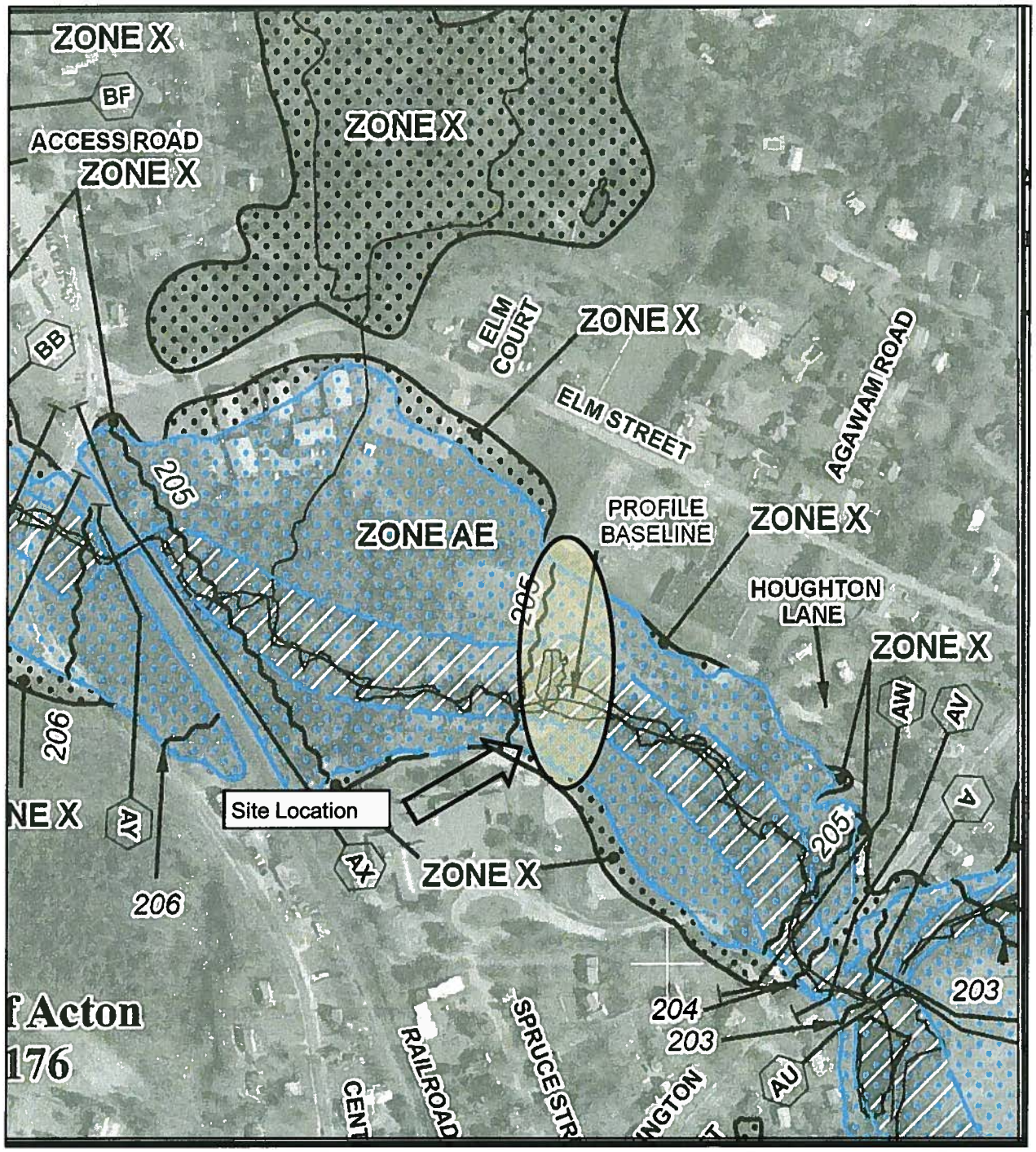

Source: FEMA June 4, 2010
Map Number 25017C0351E

West Acton Boardwalk
Acton, MA

100 Year Floodplain

AMY GREEN ENVIRONMENTAL CONSULTING, LLC

Figure 3

Attachment A

Abutter Information

AFFIDAVIT OF SERVICE

Massachusetts Wetlands Protection Act
Notice of Intent

I, Amy Green, hereby certify under the pains and penalties of perjury that on December 1, 2010, I gave notification to abutters in compliance with the second paragraph of Massachusetts General Laws Chapter 131, Section 30, and the DEP Guide to Abutter Notification dated April 8, 1994, in connection with the following matter:

An Notice of Intent was filed under the Massachusetts Wetlands Protection Act by Acton Public Schools with the Acton Conservation Commission on December 1, 2010 for the West Acton Boardwalk at 21 Elm Street in Acton, Massachusetts.

The form of notification, and a list of abutters to whom it was given and their addresses, are attached to this Affidavit of Service.

Amy M Green

Amy Green
Principal
Amy Green Environmental Consulting, LLC

12-1-2010
Date

Notification to Abutters Under the Massachusetts Wetlands Protection Act

In accordance with the second paragraph of Massachusetts General Laws Chapter 131, Section 40, you are hereby notified of the following.

A. The name of the applicant is Acton Public Schools

B. The applicant has filed a Notice of Intent (NOI) with the Conservation Commission for the municipality of Acton seeking permission to remove, fill, dredge or alter an Area Subject to Protection Under the Wetland Protection Act (General Laws Chapter 131, Section 40) and the Bylaw.

C. The address of the lot where the activity is proposed is: 21 Elm Street

D. Copies of the NOI may be examined at the Acton Conservation Commission between the hours of 9 and 4 on the following days of the week: M-F.

For more information, call: The Acton Conservation Commission at 978-264-9631

E. Copies of the NOI may be obtained from the applicant's representative by calling (978) 266 - 0217 between the hours of 9 and 5 on the following days of the week: Monday - Friday

F. Information regarding the date, time, and place of the public hearing may be obtained by calling the Conservation Commission the hours of 9 and 4 on the following days of the week: M-F.

NOTE: The public hearing will be held on December 15, 2010 at the Acton Town Hall. Notice of the public hearing, including its date, time, and place, will also be published at least five (5) days in advance in the Beacon

NOTE: Notice of the public hearing, including its date, time, and place, will also be posted in the City or Town Hall not less than forty-eight (48) hours in advance.

NOTE: You also may contact your local Conservation Commission or the nearest Department of Environmental Protection Regional Office for more information about this application or the Wetlands Protection Act. To contact DEP, call: Central Region: 508-792-7650

Town of Acton
472 Main Street
Acton, MA 01720
Telephone (978) 264-9622
Fax (978) 264-9630

Brian McMullen
Assistant Assessor

Locus: 21 Elm Street and 199 Arlington Street
Parcel ID: E2-247 and F2.A-20-1

Location	Parcel ID	Owner	Co-Owner	Mailing Address		City	ST	Zip
11 ELM ST UNIT 1	E2-240-111	ANTONELLI KEVIN M	PATTON CINDY A	11 ELM STREET #1		ACTON	MA	01720
11 ELM ST UNIT 2	E2-240-112	TAYLOR KATHLEEN E	AGNES TAYLOR	11 ELM STREET NO 2		ACTON	MA	01720
11 ELM ST UNIT 3	E2-240-113	DHILLA ESMAIL F	DHILLA MUNIRA E	11 ELM ST UNIT 3		ACTON	MA	01720
11 ELM ST UNIT 4	E2-240-114	HAHN VIRGINIA C	VIRGINIA C HAHN 2005 REV TRUST	11 ELM ST UNIT 4		ACTON	MA	01720
11 ELM ST UNIT 5	E2-240-115	GODOY ROBERT	GODOY ROSARIO MORENO	11 ELM ST UNIT 5		ACTON	MA	01720
11 ELM ST UNIT 6	E2-240-116	ALLARD PATRICIA L		PO BOX 2874		ACTON	MA	01720
11 ELM ST UNIT 7	E2-240-117	MOORE MARSHALL P		11 ELM ST UNIT 7		SUDBURY	MA	01776
11 ELM ST UNIT 8	E2-240-118	BLUE BIRD TRUST	C/O MARY BLANCHETTE	80 JARMAN ROAD		ACTON	MA	01720
3 ELM ST UNIT 1	E2-240-301	PAREKH KETAN	PAREKH HEMALI	3 ELM ST UNIT 1		MEDFIELD	MA	02052
3 ELM ST UNIT 2	E2-240-302	BRAUM THOMAS J		22 HIGH STREET		ACTON	MA	01720
3 ELM ST UNIT 3	E2-240-303	TAMBURINO AMY		3 ELM ST UNIT 3		ACTON	MA	01720
3 ELM ST UNIT 4	E2-240-304	SMITH NORMA P		3 ELM ST UNIT 4		ACTON	MA	01720
3 ELM ST UNIT 5	E2-240-305	DAVIES DONNA J		3 ELM ST #5		ACTON	MA	01720
3 ELM ST UNIT 6	E2-240-306	EBERLY BARRY L		3 ELM ST UNIT 6		ACTON	MA	01720
3 ELM ST UNIT 7	E2-240-307	LU YUN		3 ELM ST UNIT 7		ACTON	MA	01720
3 ELM ST UNIT 8	E2-240-308	SUBRAMONY SENAPATHY		191 WEST WYOMING AVE	UNIT 5	MELROSE	MA	01720
5 ELM ST UNIT 1	E2-240-501	SOAR ELIZABETH	C/O ELIZABETH ORCUTT	28 ELM ST		GROTON	MA	01450
5 ELM ST UNIT 2	E2-240-502	HOEY PATRICK TRUSTEE	HOEY JANE TRUSTEE	PBH MIDDLESEX REALTY TRUST	23 RIVER ST	BYFIELD	MA	01922
5 ELM ST UNIT 3	E2-240-503	VACEK MARTIN	VACEK IVANNA	5 ELM ST UNIT 3		ACTON	MA	01720
5 ELM ST UNIT 4	E2-240-504	ABREU HUDSON X	ABREU REGINA C	5 ELM ST UNIT 4		ACTON	MA	01720
5 ELM ST UNIT 5	E2-240-505	ZENG SHENGYOU		5 ELM ST UNIT 5		ACTON	MA	01720
5 ELM ST UNIT 6	E2-240-506	FOX NANCY KAY	C/O CAROL STORRS	5 ELM STREET #6		ACTON	MA	01720
5 ELM ST UNIT 7	E2-240-507	WEAVER STERLING L	WEAVER JEAN C	7 HARDWOOD HILL	MONROE COUNTY	PITTSFORD	NY	14534
5 ELM ST UNIT 8	E2-240-508	LANDERS DIANNA	ENNIS RACHAEL	5 ELM ST UNIT 8		ACTON	MA	01720
7 ELM ST UNIT 1	E2-240-701	SANYAL JHILAM		7 ELM ST UNIT 1		ACTON	MA	01720
7 ELM ST UNIT 2	E2-240-702	BURROWS JOAN		7 ELM STREET #2		ACTON	MA	01720
7 ELM ST UNIT 3	E2-240-703	MURPHY CYRIL J		7 ELM ST UNIT 3		ACTON	MA	01720
7 ELM ST UNIT 4	E2-240-704	GRIFFIN MAUREEN		7 ELM ST NO 4		ACTON	MA	01720
7 ELM ST UNIT 5	E2-240-705	LIU XIANGHAI	QU FENG	236 PARKER STREET		ACTON	MA	01720
7 ELM ST UNIT 6	E2-240-706	MAGZELCI MURAT + IRENA & SEMA		7 ELM ST UNIT 6		ACTON	MA	01720
7 ELM ST UNIT 7	E2-240-707	DOHERTY SHARON B		7 ELM ST UNIT 7		ACTON	MA	01720

7 ELM ST UNIT 8	E2-240-708	PAIGE WILLIAM H		7 ELM ST UNIT 8	ACTON	MA	01720
9 ELM ST UNIT 1	E2-240-901	PRENDERGAST REBECCA A		52 HAYWARD RD	ACTON	MA	01720
9 ELM ST UNIT 2	E2-240-902	CUSHMAN GEORGE P JR		9 ELM ST UNIT 2	ACTON	MA	01720
9 ELM ST UNIT 3	E2-240-903	DJW SONG LLC		4 LISA LN	ACTON	MA	01720
9 ELM ST UNIT 4	E2-240-904	CURRAN THOMAS J	CURRAN KATHLEEN M	9 ELM ST UNIT 4	ACTON	MA	01720
9 ELM ST UNIT 5	E2-240-905	SIEGEL HOWARD D		71 MONADNOCK DR	CHESTNUT HILL	MA	02167
9 ELM ST UNIT 6	E2-240-906	SIEGEL HOWARD D		71 MONADNOCK DR	CHESTNUT HILL	MA	02167
9 ELM ST UNIT 7	E2-240-907	VIGNA ANTHONY M	VIGNA SABRINA A	9 ELM ST UNIT 7	ACTON	MA	01720
9 ELM ST UNIT 8	E2-240-908	UTT RICHARD W	UTT MARY H	9 ELM ST UNIT 8	ACTON	MA	01720
4 HALF MOON HILL	E2-239-12	MEYERS REVECCA B		4 HALF MOON HILL	ACTON	MA	01720
11 HALF MOON HILL	E2-239-19	CAPASSO NICHOLAS J	SOUTHWICK ANDREA M	11 HALF MOON HILL	ACTON	MA	01720
14 HALF MOON HILL	E2-239-22	SAKS JANE		14 HALF MOON HILL	ACTON	MA	01720
15 HALF MOON HILL	E2-239-23	GROHER DANIEL	JICK SUSAN	15 HALF MOON HILL	ACTON	MA	01720
16 HALF MOON HILL	E2-239-24	FREEMAN WILLIAM T	OSMAN FRANCES J	16 HALF MOON HILL	ACTON	MA	01720
19 HALF MOON HILL	E2-239-27	PARKER ADAM L	KETELSEN LEE	19 HALF MOON HILL	ACTON	MA	01720
20 HALF MOON HILL	E2-239-28	ENGLANDER JOHN W	ENGLANDER NINA E	20 HALF MOON HILL	ACTON	MA	01720
21 HALF MOON HILL	E2-239-29	LEWIN-BERLIN STEPHEN T.	MARCIA LEWIN-BERLIN	21 HALF MOON HILL	ACTON	MA	01720
22 HALF MOON HILL	E2-239-30	SALEM JAMES C	SALEM SUSAN C	22 HALF MOON HILL	ACTON	MA	01720
23 HALF MOON HILL	E2-239-31	BEIN WARD E.	PRISCILLA D. BOLTE	23 HALF MOON HILL	ACTON	MA	01720
24 HALF MOON HILL	E2-239-32	BRADLEY MICHAEL J.	BRADLEY CARYN L.	24 HALF MOON HILL	ACTON	MA	01720
1 HALF MOON HILL	E2-239-9	KOURE,JR ROBERT C	MCMAHON HARRIETT M	1 HALF MOON HILL	ACTON	MA	01720
2 HALF MOON HILL	E2-239-10	VAN METER III ROBERT H.	PAMELA NOURSE	2 HALF MOON HILL	ACTON	MA	01720
3 HALF MOON HILL	E2-239-11	HOFFMAN DAVID A.	ANDREWS ELIZABETH L.	3 HALF MOON HILL	ACTON	MA	01720
5 HALF MOON HILL	E2-239-13	SHEFFER NOLA P		5 HALF MOON HILL	ACTON	MA	01720
6 HALF MOON HILL	E2-239-14	HECHT STEVEN	SMITH DORINE A	6 HALF MOON HILL	ACTON	MA	01720
7 HALF MOON HILL	E2-239-15	BAUER YVONNE		7 HALF MOON HILL	ACTON	MA	01720
8 HALF MOON HILL	E2-239-16	KLEINSCHMIDT DAVID	OLNEY KATHERINE L	8 HALF MOON HILL	ACTON	MA	01720
9 HALF MOON HILL	E2-239-17	LOVE NANCY B		9 HALF MOON HILL	ACTON	MA	01720
10 HALF MOON HILL	E2-239-18	ALONZO SALVATORE	HURLEY LINSEY	10 HALF MOON HILL	ACTON	MA	01720
12 HALF MOON HILL	E2-239-20	CROSBY CATHERINE F.		12 HALF MOON HILL	ACTON	MA	01720
13 HALF MOON HILL	E2-239-21	MANNING WILLIAM J	ROUNDS MARTHA R	13 HALF MOON HILL	ACTON	MA	01720
17 HALF MOON HILL	E2-239-25	TSIARAS ELLIN	TSIARAS CRISTO	17 HALF MOON HILL	ACTON	MA	01720
18 HALF MOON HILL	E2-239-26	SNYDER-GRANT JAMES F	SNYDER-GRANT DANA	18 HALF MOON HILL	ACTON	MA	01720
Rail Road		Transit Realty Associates	Att: Vanessa Merritt	77 Franklin St 9th Flor	Boston	MA	02110
2 SENECA CT	E2-178-6	BARTLETT JOHN R + JENNIFER L	ARMSTONG LYNN M	2 SENECA CT	ACTON	MA	01720
4 SENECA CT	E2-178-7	SMITH KORD S	SMITH ANN H	4 SENECA CT	ACTON	MA	01720
22 ELM ST	E2-192	22 ELM STREET LLC		22 ELM ST	ACTON	MA	01720
20 ELM ST	E2-192-2	STARR ANDREA		22 ELM ST	ACTON	MA	01720
5 JESSE DR	E2-192-5	BROGIE DANIEL C + BROGIE SANDRA		5 JESSE DR	ACTON	MA	01720
3 JESSE DR	E2-192-6	GIBALERIO KATHRYN A	FOSTER WALTER M	3 JESSE DR	ACTON	MA	01720
12 ELM ST	E2-228	FOX EDWARD	FOX SHERYL V	12 ELM ST	ACTON	MA	01720
14 ELM ST	E2-234	GABRIELLI GABRIEL		14 ELM ST	ACTON	MA	01720
6 ELM CT	E2-235	AMMENDOLIA NICHOLAS	AMMENDOLIA KATHLEEN A	6 ELM CT	ACTON	MA	01720
16 ELM ST	E2-241	AMMENDOLIA ANTHONY J.	AMMENDOLIA ANNE W.	16 ELM STREET	ACTON	MA	01720
24 ELM ST	E2-249	MURPHY JOSEPH P	ROBIN J B	24 ELM ST	ACTON	MA	01720
26 ELM ST	E2-253	WERST LEONARD	WERST DOROTHY	26 ELM ST	ACTON	MA	01720
45 AGAWAM RD	E2-253-2	YASGUR DIANE	ARCHBOLD RODOLFO	45 AGAWAM RD	ACTON	MA	01720
48 AGAWAM RD	E2-263	SCHULTZE DONALD K	SCHULTZE SUZANNE D	48 AGAWAM RD	ACTON	MA	01720

27 ELM ST	E2-269	PRENDIVILLE JOHN F PRENDIVILLE	PRENDIVILLE JOHN F TRUSTEE	MARY D PRENDIVILLE 1996 TRUST 27 ELM STREET	ACTON	MA	01720
150 ARLINGTON ST	E2-271	BENNETT EDWARD	SUSAN D	135 HAYWARD RD	ACTON	MA	01720
8 HOUGHTON LN	E2-276	HATANAKA IWAO	HATANAKA MELISSA	8 HOUGHTON LN	ACTON	MA	01720
7 HOUGHTON LN	E2-281	LUKACZ JOHN JR	MARY G	7 HOUGHTON LANE	ACTON	MA	01720
323 CENTRAL ST	E2-289	ROBERTS SONS LLC		20 HENLEY RD	ACTON	MA	01720
315 CENTRAL ST	F2.A-2-1	SUNDBERG ROBERT TRUSTEE	ROBERTS SONS TRUST	20 HENLEY ROAD	ACTON	MA	01720
313 CENTRAL ST	F2.A-2-2	BLAUFUSS SCOTT E	BLAUFUSS MAUREEN D	313 CENTRAL ST	ACTON	MA	01720
317 CENTRAL ST	F2.A-2-3	SUNDBERG ROBERT A TRUSTEE	ROBERT'S SON TRUST	20 HENLEY ROAD	ACTON	MA	01720
6 HOUGHTON LN	F2.A-4	JIA CHUNGUANG	SHANG SHILIAN	6 HOUGHTON LN	ACTON	MA	01720
4 HOUGHTON LN	F2.A-7	VANDEGRIFT JEFFREY C	VANDEGRIFT TINEKE	4 HOUGHTON LANE	ACTON	MA	01720
2 HOUGHTON LN	F2.A-9	ASEBROOK MICHAEL	ASEBROOK MIKAELA DEYOUNG	2 HOUGHTON LN	ACTON	MA	01720
181 ARLINGTON ST	F2.A-13	MILL DAM TRUST	C/O BARBARA KEIZER	1 LEXINGTON ROAD	CONCORD	MA	01742
175 ARLINGTON ST	F2.A-14	LIN MIN-CHENG	VAN-ROONG WANG LIN	175 ARLINGTON ST	ACTON	MA	01720
68 SPRUCE ST	F2.A-17	JENKS DOROTHY TRUSTEE	LITTLE LANTERN RLTY TR	68 SPRUCE ST	ACTON	MA	01720
51 SPRUCE ST	F2.A-18	FLANNERY JEANETTEL FKA JEANETT		51 SPRUCE ST	ACTON	MA	01720
61 SPRUCE ST	F2.A-18-1	SMITH AIDEN T	REGAN-SMITH ELLEN	61 SPRUCE ST	ACTON	MA	01720
41 SPRUCE ST	F2.A-18-2	FLANNERY JR EDWARD W		41 SPRUCE ST	ACTON	MA	01720
50 SPRUCE ST	F2.A-19	JENKS DOROTHY TRUSTEE	LITTLE LANTERN RLTY TR	68 SPRUCE STREET	ACTON	MA	01720
205 ARLINGTON ST	F2.A-20-2	REAGAN RONALD J	LAMBERT DIANE M	205 ARLINGTON ST	ACTON	MA	01720
211 ARLINGTON ST	F2.A-20-3	YEN WILLIAM	YEN MARGARET	211 ARLINGTON ST	ACTON MA	MA	01720
195 ARLINGTON ST	F2.A-21	MARDEN KURT M	MARDEN JACQUELINE J	P.O. BOX 2622	ACTON	MA	01720
190 ARLINGTON ST	F2.A-22-2	TOWN OF ACTON		190 ARLINGTON ST	ACTON	MA	01720
198 ARLINGTON ST	F2.A-29	REED MARGOT		198 ARLINGTON STREET			

The owner of land sharing a common boundry or corner with the site of the proposed activity (100 feet) in any direction, including land located directly across a street, way, creek, river, stream, brook or canal. The above are as they appear on the most recent applicable taxes.

Daryl Powell 10/27/2010

Daryl Powell
Property Lister
Acton Assessors Office

Attachment B

Photographs

WEST ACTON BOARDWALK
ACTON, MASSACHUSETTS

Photo 1.

Boardwalk and observation deck to be replaced.

September 29, 2010

Photo 2.

Trampled ground at approximate location of gangway to floating dock.

September 29, 2010

AMY GREEN ENVIRONMENTAL CONSULTING, LLC

WEST ACTON BOARDWALK
ACTON, MASSACHUSETTS

Photo 3.

Trampled ground at approximate location of gangway to floating dock and culvert to be removed.

September 29, 2010

Photo 4.

Entrance trail to Kid Island to be replaced by "bridge".

September 29, 2010

WEST ACTON BOARDWALK
ACTON, MASSACHUSETTS

Photo 5.

View of new board-walk.

September 29, 2010

Attachment C

Plans

RYAN ASSOCIATES
LANDSCAPE ARCHITECUTRE AND PLANNING

WEST ACTON
BOARDWALK

FRIENDS OF
WEST ACTON BOARDWALK
ACTON, MA

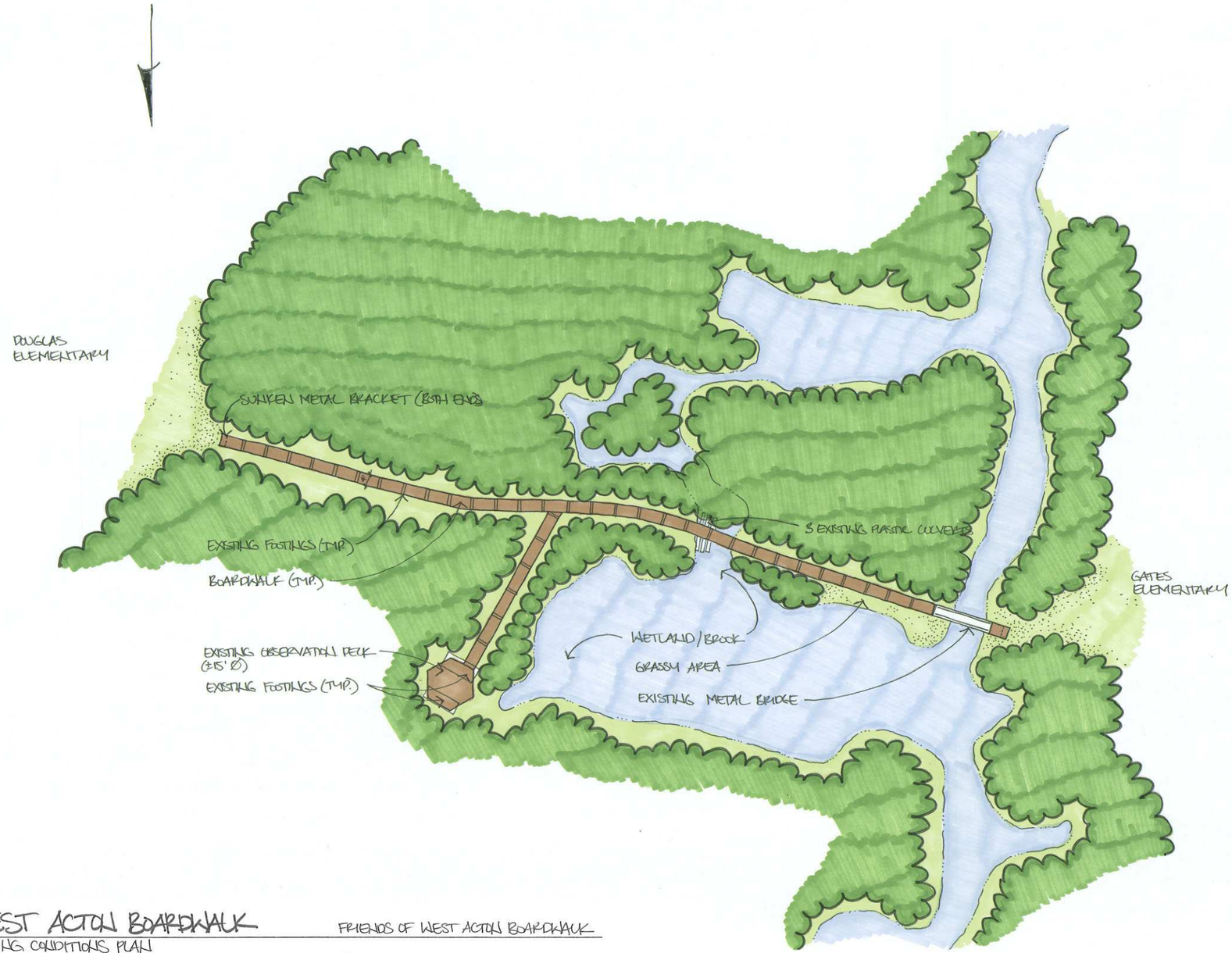

WEST ACTON BOARDWALK

FRIENDS OF WEST ACTON BOARDWALK

EXISTING CONDITIONS PLAN
OCTOBER 3, 2008
1"=20'
RYAN ASSOCIATES LANDSCAPE ARCHITECTURE + PLANNING

RYAN ASSOCIATES
LANDSCAPE ARCHITECUTRE AND PLANNING

EXISTING CONDITIONS PLAN

FRIENDS OF
WEST ACTON BOARDWALK
ACTON, MA

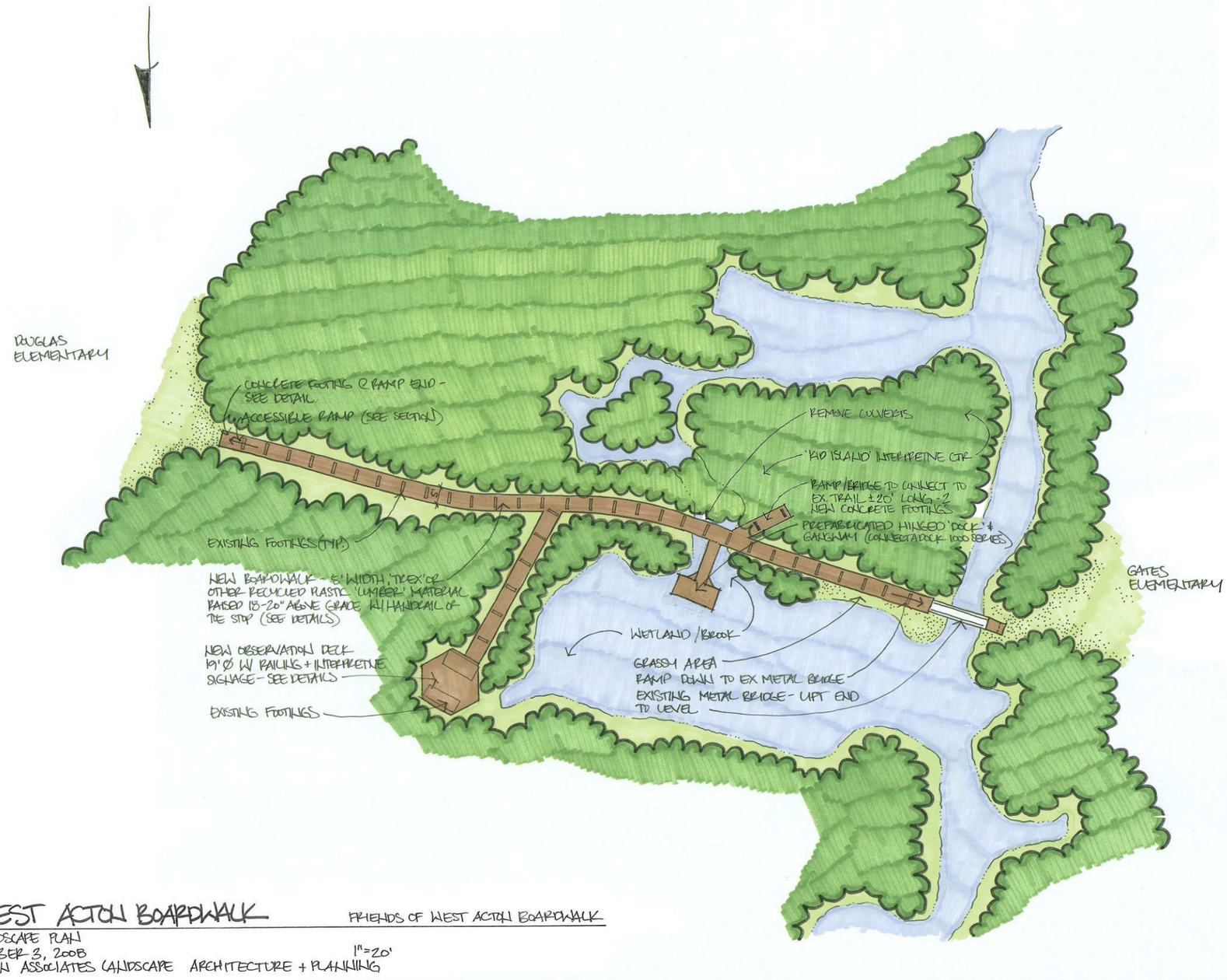

RYAN ASSOCIATES
LANDSCAPE ARCHITECUTRE AND PLANNING

LAYOUT AND MATERIALS PLAN

FRIENDS OF
WEST ACTON BOARDWALK
ACTON, MA

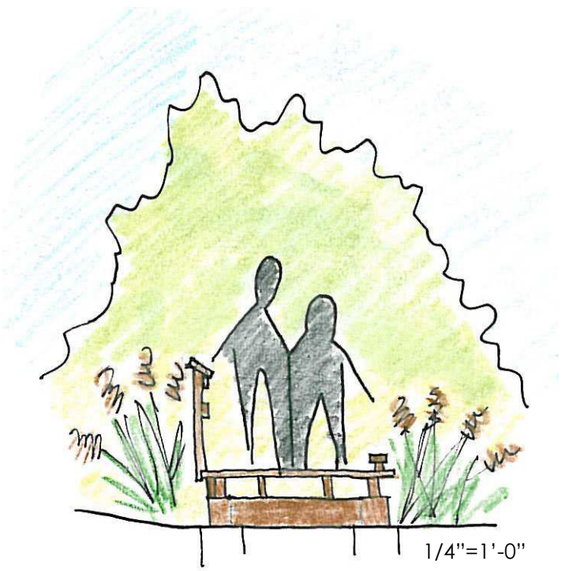

Wooden Rail

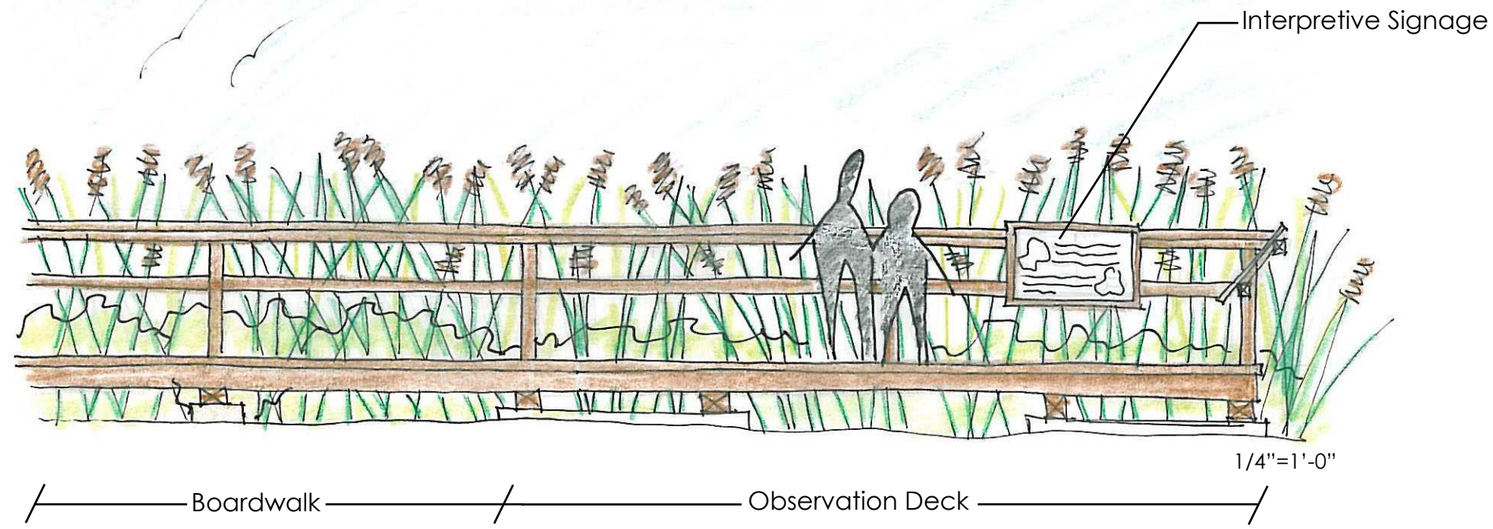

BOARDWALK RAILING AND OBSERVATION DECK

RYAN ASSOCIATES
LANDSCAPE ARCHITECUTRE AND PLANNING

DOCK

FRIENDS OF
WEST ACTON BOARDWALK
ACTON, MA

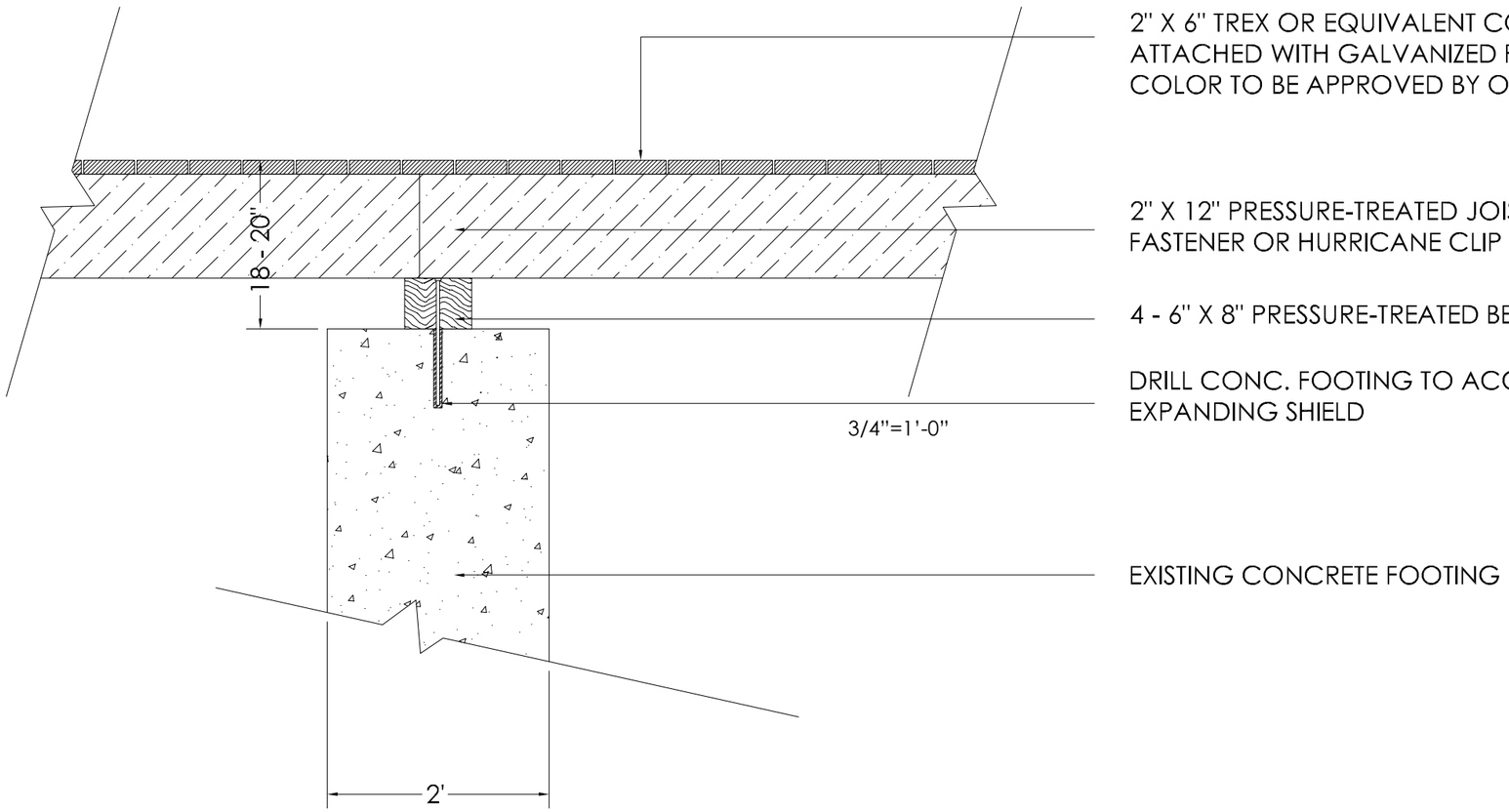

2" X 6" TREX OR EQUIVALENT COMPOSITE DECKING W/ $\frac{1}{4}$" SPACING, ATTACHED WITH GALVANIZED FASTENERS.
COLOR TO BE APPROVED BY OWNER

2" X 12" PRESSURE-TREATED JOISTS. CONNECT WITH MECHANICAL FASTENER OR HURRICANE CLIP

4 - 6" X 8" PRESSURE-TREATED BEAM, BOLTED

DRILL CONC. FOOTING TO ACCEPT GALVANIZED LAG BOLT WITH EXPANDING SHIELD

EXISTING CONCRETE FOOTING

BOARDWALK FOOTING DETAIL

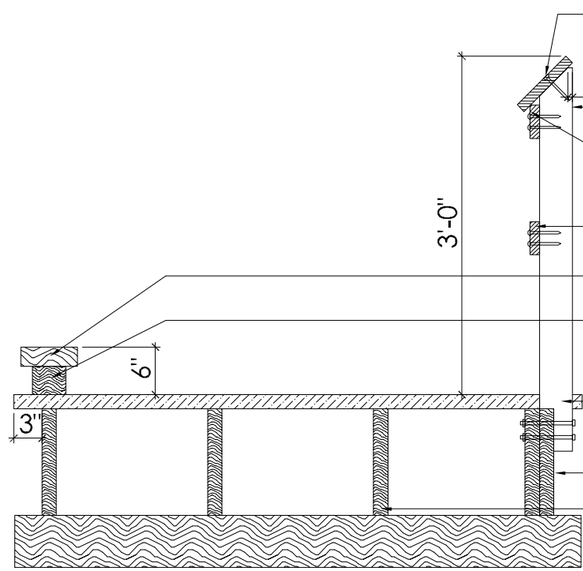

1" X 8" TREX OR EQUIVALENT COMPOSITE BOARD, LAG-BOLTED TO BEVELED 4" X 4" POST. COLOR TO BE APPROVED BY OWNER

4" X 4" PRESSURE-TREATED POST-CUT 45 BEVEL IN TOP

1" X 4" TREX OR EQUIVALENT COMPOSITE BOARD, LAG-BOLTED TO 4" X 4" POST. COLOR TO BE APPROVED BY OWNER

2"X6" TREX RAIL

4"X4"X4" BLOCK, @ 4' O.C. (FOR DRAINAGE)

CUT 1 $\frac{1}{2}$" X 6" NOTCH OUT OF POST, NOTCH DECKING AROUND POST, CARRIAGE-BOLT POST TO JOIST

DOUBLE JOIST UNDER RAILING SIDE

4 JOISTS, EVENLY SPACED

SECTION 3/4"=1'-0"

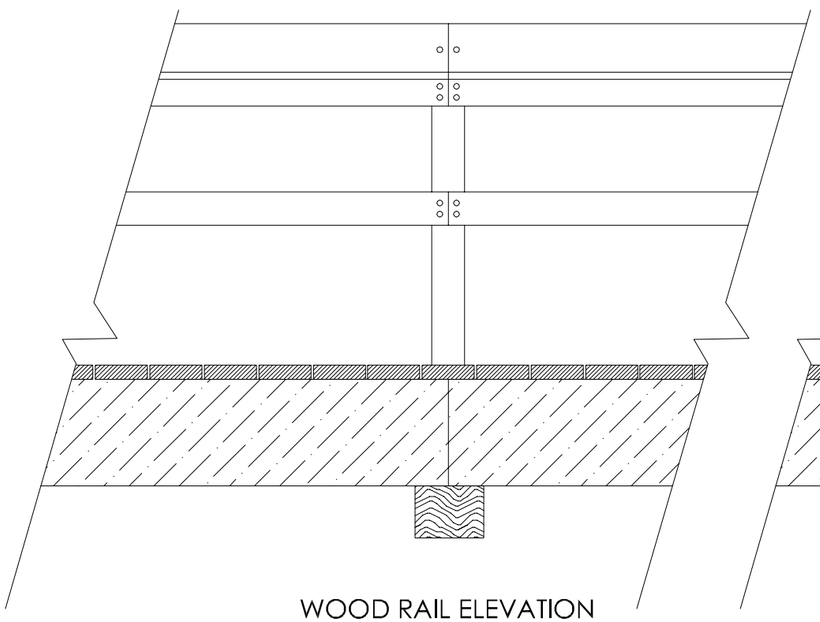

WOOD RAIL ELEVATION
3/4"=1'-0"

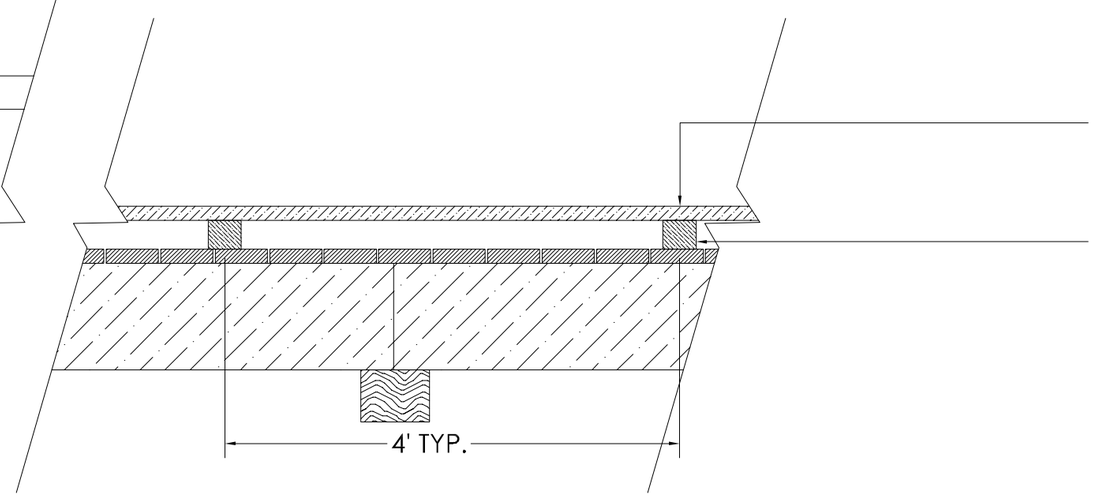

2" X 6" TREX RAIL

4" X 4" X 4" BLOCK, @ 4' O.C. (FOR DRAINAGE)

TOE RAIL ELEVATION
3/4"=1'-0"

RYAN ASSOCIATES
LANDSCAPE ARCHITECUTRE AND PLANNING

WOODEN RAILING AND TOE STOP RAIL DETAIL

FRIENDS OF
WEST ACTON BOARDWALK
ACTON, MA

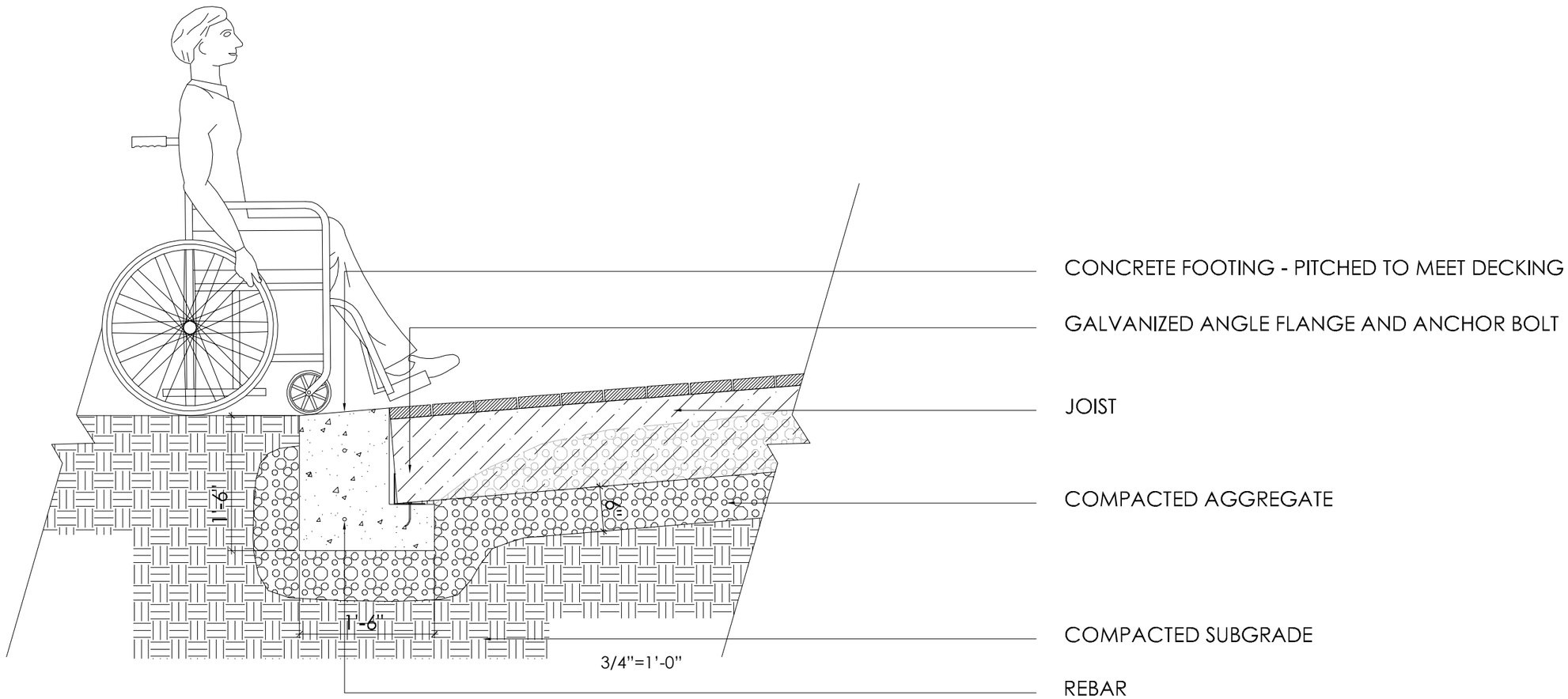

RYAN ASSOCIATES
LANDSCAPE ARCHITECUTRE AND PLANNING

RAMP DETAIL

FRIENDS OF
WEST ACTON BOARDWALK
ACTON, MA

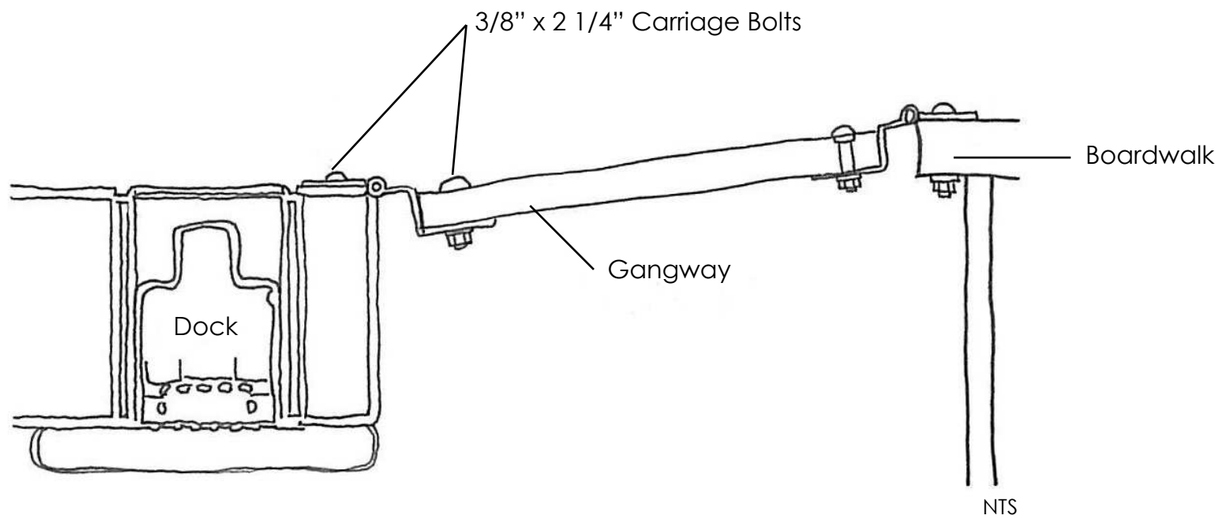
3/8" x 2 1/4" Carriage Bolts
Boardwalk
Gangway
Dock
NTS

1000 Series

Low Profile (LP)

is the logical choice for extending your waterfront enjoyment providing the ultimate versatility in configuration, simple installation and extreme durability. Designed for maintenance-free use as a floating boat dock and platform, the 1000 SERIES - (LP) is best suited for smaller bodies of water or coves that are protected from large waves. The modular connection system allows you to configure, rearrange and expand your dock in an unlimited variety of shapes and sizes.

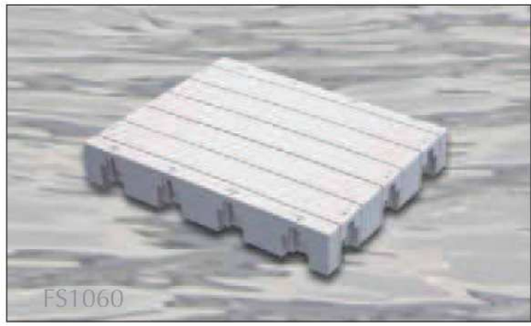

Color:
Gray Oak

Dimensions:
45″ x 60″ x 10″
(114.3 cm x 152.4 cm x 25.4 cm)

Weight:
86 lbs (39 kg)

Maximum Flotation:
690 lbs (313 kg)

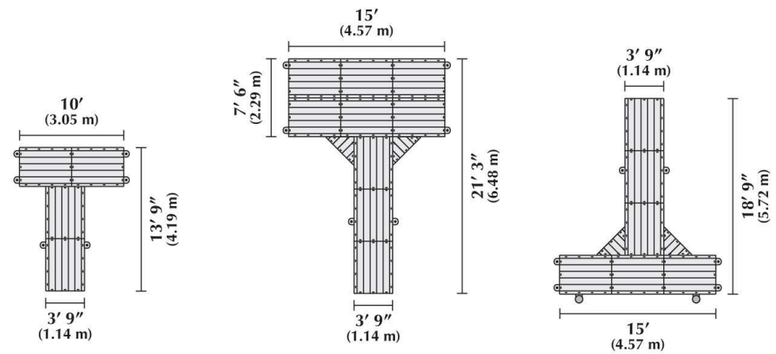

tpk1006 **tpk1009** **tpk1010**

	tpk1006	tpk1009	tpk1010
Float Sections	4	9	6
Float Connectors	9	41	23
Pole Connectors	6	6	6
Gangway Hinge	1	1	1
Pole Covers	6	6	6
Cleats	2	4	4
Corner Float Section	–	2	2
Extra Flotation	6	6	6
Self-Wicking Planter	–	–	2

26″ Guardrail
26″ x 40″
(66.04 cm x 101.6 cm)
GR1026
(2 AC1000 Accessory Connectors and Hardware included)

41″ Guardrail
41″ x 40″
(104.14 cm x 101.6 cm)
GR1041
(2 AC1000 Accessory Connectors and Hardware included)

56″ Guardrail
56″ x 40″
(142.24 cm x 101.6 cm)
GR1056
(2 AC1000 Accessory Connectors and Hardware included)

Cost: Dock (tpk1009) approx. $8,400
Guardrail approx. $5,600
Total: approx. $14,000
*Includes shipping costs

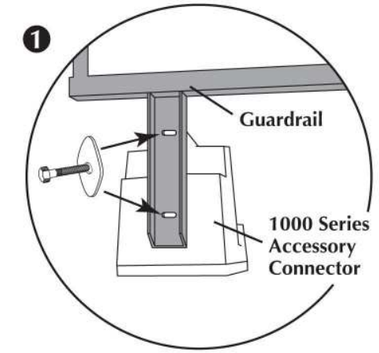

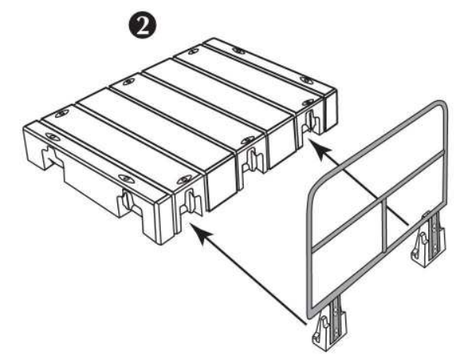

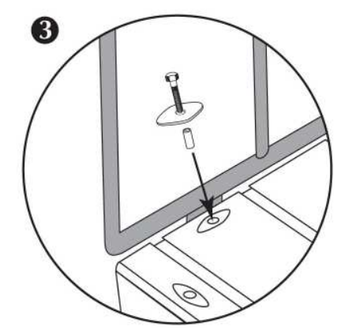

Trex Accents®

The grain is subtle. The beauty isn't.

There's nothing like the understated beauty of a subtle wood grain. Trex Accents offers you the warm, natural look of wood, but with the carefree ease of Trex. Best of all, both sides of Trex Accents® can be used - with a subtle wood grain pattern on one side and a smooth, refined look on the other. The possibilities are endless, but not the maintenance.

Woodland Brown / Accents Close Window

Unweathered Weathered

Winchester Grey / Accents Close Window

Unweathered Weathered

Saddle / Accents Close Window

Unweathered Weathered

Madeira / Accents Close Window

Unweathered Weathered

Available Decking & Dock Profiles	12'	16'	20'	Colors
Trex Accents® LEARN MORE				
5/4x6 (1.1" x 5.5")	✔	✔	✔	WG, SD, MB, WB

Cost: $5.85 per sq. ft.

Connect-A-Dock:

Dock: 1 tpk 1009 $7,379 (plus $1,030 shipping)
Guardrail: 4 GR1026 $1,136 (plus $200 shipping)
10 GR1041 $3,750 (plus $500 shipping)
Total: $13,995 (with shipping)

Boardwalk Deck and Obersvation Deck (Decking only):

Existing: 1,466 sq. ft.
Proposed: 1,900 sq. ft. (434 sq. ft increase: +/- 30%)
Total with Trex: $11,115

Not included:

Joists, Beams, and Rails
Interpretive Signage
Labor

Lake of the Sky

Andrea Ristine

From: JD Head [jdhead@mail.ab.mec.edu]
Sent: Wednesday, December 08, 2010 1:39 PM
To: Conservation Commission
Subject: Conflict with Dec 15th meeting

Acton Conservation Committee,

I am writing to respectfully request a change in the NOI hearing date for the West Acton Boardwalk due to a personal conflict. I believe we were originally scheduled for the December 15th meeting. I am requesting that this hearing be moved to the January 5th agenda.

Thank you for your time and consideration.

Best Regards,
JD Head
Director of Facilities and Transportation
APS / ABRSD

Hearing rescheduled
to January 5, 2011
@ 7:40 PM
Acton Town Hall
472 Main street
Room 204