SITE DEVELOPMENT PLANS

FOR:

Pulte Homes

THE RESIDENCES AT QUAIL RIDGE

354 B GREAT ROAD & SKYLINE DRIVE
TOWN OF ACTON
MIDDLESEX COUNTY, MA

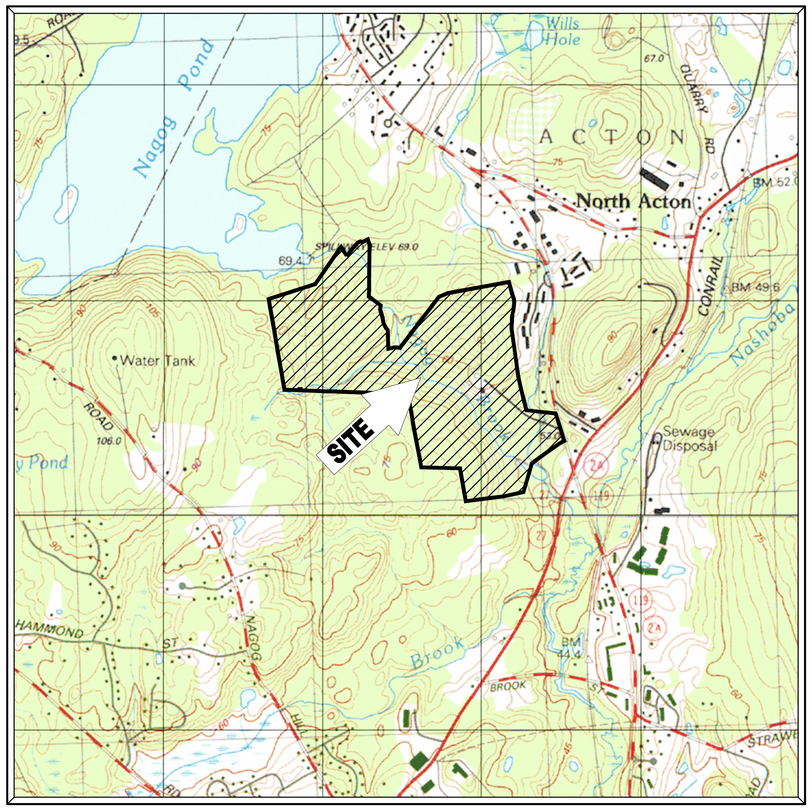

AREA MAP
SCALE: 1" = 1000'
(REFERENCE: USGS MAP)

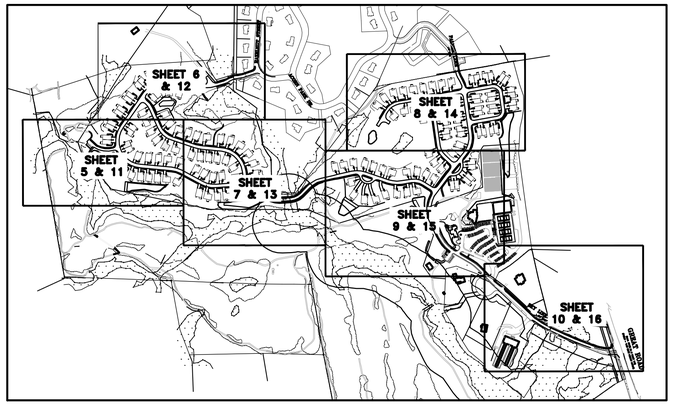

SHEET INDEX
SCALE: 1" = 500'

DRAWING INDEX

SHEET TITLE	SHEET NUMBER
COVER SHEET	1 OF 37
NOTES SHEET	2 OF 37
MASTER SITE PLAN "A"	3 OF 37
MASTER SITE PLAN "B"	4 OF 37
SITE AND UTILITY PLAN "A"	5 OF 37
SITE AND UTILITY PLAN "B"	6 OF 37
SITE AND UTILITY PLAN "C"	7 OF 37
SITE AND UTILITY PLAN "D"	8 OF 37
SITE AND UTILITY PLAN "E"	9 OF 37
SITE AND UTILITY PLAN "F"	10 OF 37
GRADING AND DRAINAGE PLAN "A"	11 OF 37
GRADING AND DRAINAGE PLAN "B"	12 OF 37
GRADING AND DRAINAGE PLAN "C"	13 OF 37
GRADING AND DRAINAGE PLAN "D"	14 OF 37
GRADING AND DRAINAGE PLAN "E"	15 OF 37
GRADING AND DRAINAGE PLAN "F"	16 OF 37
EROSION AND SEDIMENT CONTROL PLAN "A"	17 OF 37
EROSION AND SEDIMENT CONTROL PLAN "B"	18 OF 37
EROSION AND SEDIMENT CONTROL PLAN "C"	19 OF 37
EROSION CONTROL NOTES AND DETAILS	20 OF 37
SKYLINE DRIVE - PROFILE "A"	21 OF 37
SKYLINE DRIVE - PROFILE "B"	22 OF 37
QUAIL RIDGE DRIVE - PROFILE "A"	23 OF 37
QUAIL RIDGE DRIVE - PROFILE "B"	24 OF 37
QUAIL RIDGE DRIVE - PROFILE "C"	25 OF 37
QUAIL RIDGE DRIVE - PROFILE "D"	26 OF 37
PARKLAND LANE - PROFILE "A"	27 OF 37
PARKLAND LANE - PROFILE "B"	28 OF 37
GREENSIDE LANE - PROFILE "A"	29 OF 37
GREENSIDE LANE - PROFILE "B"	30 OF 37
RYDER PATH - PROFILE	31 OF 37
CONSTRUCTION DETAILS	32 THRU 36 OF 37
WETLAND CROSSING AND REPLICATION DETAILS	37 OF 37
BOUNDARY & TOPOGRAPHIC SURVEY (BY OTHERS)	1 THRU 15 OF 15

BOHLER ENGINEERING
352 TURNPIKE ROAD
SOUTHBOROUGH, MA 01772
508-480-9900 - 508-480-9080 FAX

RECORD OWNER
QR PROPERTIES, LLC
32 SANDYPINE ROAD
TEMPLETON, MA 01468

APPLICANT
PULTE HOMES OF NEW ENGLAND, LLC
115 FLANDERS ROAD, SUITE 200
WESTBOROUGH, MA 01581

BOHLER ENGINEERING
CIVIL & CONSULTING ENGINEERS
SURVEYORS
PROJECT MANAGERS
ENVIRONMENTAL CONSULTANTS
LANDSCAPE ARCHITECTS
CORPORATE OFFICE:
◆ WARREN, NJ
OFFICES:
◆ SOUTHBOROUGH, MA
◆ BOSTON, MA
◆ TOWSON, MD
◆ LEESBURG, VA
◆ ROANOKE, VA
◆ CENTER VALLEY, PA
◆ CHALFONT, PA
◆ ALLENTOWN, PA
◆ STERLING, VA
◆ HARRISBURG, PA
◆ FORT LAUDERDALE, FL
◆ TAMPA, FL

THESE PLANS AND DESIGNS ARE COPYRIGHTED BY BOHLER ENGINEERING AND SHALL REMAIN THE PROPERTY OF BOHLER ENGINEERING. ONLY APPROVED, SIGNED AND SEALED PLANS SHALL BE USED FOR CONSTRUCTION PURPOSES. © 2009 BOHLER ENGINEERING

REVISIONS

REV	DATE	COMMENT	BY
1	07-06-2011	CON-COM SUBMISSION	JAB
2			
3			
4			
5			
6			
7			
8			
9			

THE FOLLOWING STATES REQUIRE NOTIFICATION BY EXCAVATORS, DESIGNERS, OR ANY PERSON PREPARING TO DISTURB THE EARTHS SURFACE ANYWHERE IN THE STATE.
(MA, ME, NH, RI, VT 1-888-344-7233)
(CT 1-800-922-4455)
(NY 1-800-962-7962)

NOT APPROVED FOR CONSTRUCTION

PROJECT No.:	W111022
DRAWN BY:	CFD
CHECKED BY:	JAB/SPD
DATE:	05/23/2011
SCALE:	AS NOTED
CAD I.D.:	w111022ss1

PROJECT:
SITE PLAN
FOR
Pulte Homes
THE RESIDENCES AT QUAIL RIDGE
LOCATION OF SITE
354 B GREAT ROAD & SKYLINE DR.
TOWN OF ACTON
MIDDLESEX COUNTY, MA

BOHLER ENGINEERING
352 TURNPIKE ROAD
SOUTHBOROUGH, MA 01772
Phone: (508) 480-9900
Fax: (508) 480-9080
www.BohlerEngineering.com

S.P. DECOURSEY
PROFESSIONAL ENGINEER
MASSACHUSETTS LICENSE No. 38424
NEW HAMPSHIRE LICENSE No. 9308
MAINE LICENSE No. 8408
VERMONT LICENSE No. 7110
CONNECTICUT LICENSE No. 23682
RHODE ISLAND LICENSE No. 7990

SHEET TITLE:
COVER SHEET

SHEET NUMBER:
1
OF 37

REV 0 - 05/23/2011

P:\111W\111022\DWG\w111022ss1.dwg, 0) _ T-1 Cover, 4/23/2010, 09:71:14 AM, jsanbenedetto, XerxCS31fx (.pc3, User54, i.9999999

GENERAL DEMOLITION PLAN NOTES

1. BOHLER ENGINEERING IS NOT RESPONSIBLE FOR JOB SITE SAFETY OR SUPERVISION.
2. ALL DEMOLITION ACTIVITIES ARE TO BE PERFORMED IN ACCORDANCE WITH THESE PLANS AND SPECIFICATIONS AS WELL AS ALL FEDERAL, STATE AND LOCAL REGULATIONS. ANY DISCREPANCIES OR DEVIATIONS SHALL BE IDENTIFIED BY THE CONTRACTOR TO BOHLER ENGINEERING IN WRITING FOR RESOLUTION PRIOR TO INITIATION OF SITE ACTIVITY.
3. PRIOR TO STARTING ANY DEMOLITION CONTRACTOR IS RESPONSIBLE FOR/TO:
   A. ENSURING THAT COPIES OF ALL APPLICABLE PERMITS AND APPROVALS ARE MAINTAINED ON-SITE AND AVAILABLE FOR REVIEW.
   B. INSTALLING THE REQUIRED SOIL EROSION AND SEDIMENT CONTROL AND/OR TREE PROTECTION MEASURES PRIOR TO SITE DISTURBANCE.
   C. LOCATING (VERTICALLY AND HORIZONTALLY) ALL UTILITIES AND SERVICES, INCLUDING, BUT NOT LIMITED TO GAS, WATER, ELECTRIC, SANITARY AND STORM SEWER, TELEPHONE, CABLE, FIBER OPTIC CABLE, ETC. WITHIN THE LIMITS OF DISTURBANCE. THE CONTRACTOR SHALL USE AND COMPLY WITH THE REQUIREMENTS OF THE APPLICABLE UTILITY NOTIFICATION SYSTEM TO LOCATE ALL THE UNDERGROUND UTILITIES.
   D. PROTECTING AND MAINTAINING IN OPERATION, ALL ACTIVE SYSTEMS THAT ARE NOT BEING REMOVED DURING ALL DEMOLITION ACTIVITIES.
   E. FAMILIARIZING THEMSELVES WITH THE APPLICABLE UTILITY SERVICE PROVIDER AND IS RESPONSIBLE FOR ALL COORDINATION REGARDING UTILITY DEMOLITION REQUIRED FOR THE PROJECT. THE CONTRACTOR SHALL PROVIDE THE OWNER WRITTEN NOTIFICATION THAT THE EXISTING UTILITIES AND SERVICES HAVE BEEN TERMINATED AND ABANDONED IN ACCORDANCE WITH JURISDICTION AND UTILITY COMPANY REQUIREMENTS.
   F. COORDINATION WITH UTILITY COMPANIES REGARDING WORKING "OFF-PEAK" HOURS OR ON WEEKENDS AS MAY BE REQUIRED TO MINIMIZE THE IMPACT ON THE AFFECTED PARTIES.
   G. A COMPLETE INSPECTION FOR CONTAMINANTS BY A LICENSED ENVIRONMENTAL TESTING AGENCY, OF ALL BUILDINGS AND/OR STRUCTURES TO BE REMOVED. SAME SHALL BE PERFORMED IN ACCORDANCE WITH ALL APPLICABLE LOCAL, STATE, AND FEDERAL ENVIRONMENTAL REGULATIONS. ANY/ALL CONTAMINANTS SHALL BE REMOVED AND DISPOSED OF BY A FEDERALLY LICENSED CONTRACTOR IN ACCORDANCE WITH FEDERAL, STATE, AND LOCAL REGULATIONS. ALL ENVIRONMENTAL WORK INCLUDING HAZARDOUS MATERIAL, SOILS, ASBESTOS, OR OTHER REFERENCED OR IMPLIED HEREIN IS THE SOLE RESPONSIBILITY OF THE OWNER'S ENVIRONMENTAL CONSULTANT.
5. BOHLER ENGINEERING IS NOT RESPONSIBLE FOR JOB SITE SAFETY OR SUPERVISION. CONTRACTOR IS TO PROCEED WITH THE DEMOLITION IN A SYSTEMATIC AND SAFE MANNER, FOLLOWING ALL THE OSHA REQUIREMENTS, TO ENSURE PUBLIC AND CONTRACTOR SAFETY.
6. THE CONTRACTOR SHALL PROVIDE ALL THE "MEANS AND METHODS" NECESSARY TO PREVENT MOVEMENT, SETTLEMENT, OR COLLAPSE OF EXISTING STRUCTURES, AND ANY OTHER IMPROVEMENTS THAT ARE REMAINING ON-SITE OR OFF-SITE. THE DEMOLITION CONTRACTOR IS RESPONSIBLE FOR ALL REPAIRS OF DAMAGE TO ALL ITEMS THAT ARE TO REMAIN AS A RESULT OF HIS ACTIVITIES. ALL REPAIRS SHALL USE NEW MATERIAL. THE REPAIRS SHALL RESTORE THE ITEM TO THE PRE-DEMOLITION CONDITION.
7. IN THE ABSENCE OF SPECIFICATIONS, THE CONTRACTOR SHALL PERFORM EARTH MOVEMENT ACTIVITIES, DEMOLITION AND REMOVAL OF ALL FOUNDATION WALLS, FOOTINGS, AND OTHER MATERIALS WITHIN THE LIMITS OF DISTURBANCE IN ACCORDANCE WITH DIRECTION BY OWNER'S STRUCTURAL OR GEOTECHNICAL ENGINEER.
8. EXPLOSIVES SHALL NOT BE USED WITHOUT PRIOR WRITTEN CONSENT OF BOTH THE OWNER AND APPLICABLE GOVERNMENTAL AUTHORITIES. ALL THE REQUIRED PERMITS AND EXPLOSIVE CONTROL MEASURES THAT ARE REQUIRED BY THE FEDERAL, STATE, AND LOCAL GOVERNMENTS SHALL BE IN PLACE PRIOR TO STARTING AN EXPLOSIVE PROGRAM. THE CONTRACTOR IS ALSO RESPONSIBLE FOR ALL INSPECTION AND SEISMIC VIBRATION TESTING THAT IS REQUIRED TO MONITOR THE EFFECTS ON ALL LOCAL STRUCTURES.
9. CONTRACTOR SHALL PROVIDE TRAFFIC CONTROL AND GENERALLY ACCEPTED SAFE PRACTICES IN CONFORMANCE WITH: THE CURRENT "MANUAL ON UNIFORM TRAFFIC CONTROL," AS WELL AS FEDERAL, STATE, AND LOCAL REGULATIONS WHEN DEMOLITION RELATED ACTIVITIES IMPACT ROADWAYS OR ROADWAY RIGHTS-OF-WAY.
10. CONDUCT DEMOLITION ACTIVITIES IN SUCH A MANNER TO ENSURE MINIMUM INTERFERENCE WITH ROADS, STREETS, SIDEWALKS, WALKWAYS, AND OTHER ADJACENT FACILITIES. STREET CLOSURE PERMITS MUST BE RECEIVED FROM THE APPROPRIATE GOVERNMENTAL AUTHORITY.
11. DEMOLITION ACTIVITIES AND EQUIPMENT SHALL NOT USE AREAS OUTSIDE THE DEFINED PROPERTY LINE WITHOUT WRITTEN PERMISSION OF THE APPLICABLE PROPERTY OWNER, AND/OR APPROPRIATE GOVERNMENT AGENCY.
12. USE DUST CONTROL MEASURES TO LIMIT AIRBORNE DUST AND DIRT RISING AND SCATTERING IN THE AIR IN ACCORDANCE WITH FEDERAL, STATE, AND/OR LOCAL STANDARDS. AFTER THE DEMOLITION IS COMPLETE, ADJACENT STRUCTURES AND IMPROVEMENTS SHALL BE CLEANED OF ALL DUST AND DEBRIS CAUSED BY THE DEMOLITION OPERATIONS. THE CONTRACTOR IS RESPONSIBLE FOR RETURNING ALL ADJACENT AREAS TO THEIR "PRE-DEMOLITION" CONDITION.
13. CONTRACTOR IS RESPONSIBLE TO SAFEGUARD SITE AS NECESSARY TO PERFORM THE DEMOLITION IN SUCH A MANNER AS TO PREVENT THE ENTRY OF UNAUTHORIZED PERSONS AT ANY TIME.
14. THIS DEMOLITION PLAN IS INTENDED TO IDENTIFY THOSE EXISTING ITEMS/CONDITIONS WHICH ARE TO BE REMOVED. IT IS NOT INTENDED TO PROVIDE DIRECTION OTHER THAN THAT ALL "MEANS AND METHODS" ARE TO BE IN ACCORDANCE WITH STATE, FEDERAL, LOCAL, AND JURISDICTIONAL REQUIREMENTS. THE CONTRACTOR SHALL BE RESPONSIBLE FOR ALL OSHA AND OTHER SAFETY PRECAUTIONS NECESSARY TO PROVIDE A SAFE WORK SITE.
15. DEBRIS SHALL NOT BE BURIED ON THE SUBJECT SITE. ALL DEMOLITION WASTES AND DEBRIS (SOLID WASTE) SHALL BE DISPOSED OF IN ACCORDANCE WITH ALL TOWN, COUNTY, STATE, AND FEDERAL LAWS AND APPLICABLE CODES.

GENERAL SITE PLAN NOTES

1. THIS PLAN REFERENCES A SURVEY PREPARED BY:

   CONTROL POINT ASSOCIATES, INC.
   35 TECHNOLOGY DRIVE
   WARREN, NEW JERSEY, 070959
   DATED: 06/07/11 REVISED THROUGH 06/13/11

2. SPECIFIC RESOURCES, TECHNICAL REPORTS, DESIGN DOCUMENTS, ET. AL. RELATED TO THIS PROJECT INCLUDE (BUT MAY NOT BE LIMITED TO) THE FOLLOWING:

   -SURVEY: "BOUNDARY AND TOPOGRAPHIC SURVEY" PREPARED BY CONTROL POINT ASSOCIATES, INC., WARREN, NJ, DATED 06/07/11, REVISED THROUGH 06/13/11
   -GEOTECH: "PRELIMINARY GEOTECHNICAL INVESTIGATION FOR RESIDENCES AT QUAIL RIDGE, PROPOSED RETAIL DEVELOPMENT", DATED MARCH 2011 BY UTS OF MASSACHUSETTS, INC.
   -GEOTECH: "SITE PLANS ENTITLED "THE RESIDENCES AT QUAIL RIDGE, SENIOR RESIDENCE SPECIAL PERMIT", DATED JULY 18, 2001, PREPARED BY STAMSKI AND MCNARY, INC., 80 HARRIS ST, ACTON, MA.
   -TRAFFIC:
   -ENVIRONMENTAL:

   CONTRACTOR IS RESPONSIBLE FOR OBTAINING THESE DOCUMENTS AND FAMILIARIZING THEMSELVES WITH SAME FOR APPLICATION BOTH PRIOR TO AND DURING CONSTRUCTION.

3. ALL ELEVATIONS SHOWN ARE IN REFERENCE TO THE REFERENCED SURVEYOR'S BENCHMARK AND MUST BE VERIFIED BY THE GENERAL CONTRACTOR PRIOR TO GROUNDBREAK.

   APPLICANT:
   PULTE HOMES OF NEW ENGLAND, LLC
   115 FLANDERS ROAD, SUITE 200
   WESTBOROUGH, MA 01581

4. PARCEL DATA: LOT IS SHOWN AS LOT 29, MAP C-4 & LOTS 4 AND 9, MAP D-4 ON THE TOWN OF ACTON ASSESSOR'S MAP.
5. ALL HANDICAP PARKING SPACES SHALL BE CONSTRUCTED TO MEET CURRENT ADA/AAB REQUIREMENTS.
6. PRIOR TO STARTING CONSTRUCTION, THE CONTRACTOR SHALL ENSURE THAT ALL REQUIRED PERMITS AND APPROVALS HAVE BEEN OBTAINED. NO CONSTRUCTION OR FABRICATION SHALL BEGIN UNTIL THE CONTRACTOR HAS RECEIVED AND THOROUGHLY REVIEWED ALL PLANS AND OTHER DOCUMENTS BY ALL OF THE PERMITTING AUTHORITIES.
7. THE OWNER/CONTRACTOR SHALL BE FAMILIAR WITH AND RESPONSIBLE FOR ANY/ALL CERTIFICATIONS, INSPECTIONS, ETC. REQUIRED BY ALL GOVERNING JURISDICTIONAL AGENCIES DURING AND AFTER CONSTRUCTION FOR SIGN-OFF AND CERTIFICATE OF OCCUPANCY ISSUANCE, INCLUDING BUT NOT LIMITED TO PROCUREMENT OF SERVICES, SCHEDULING OF FIELD OBSERVATIONS AND COORDINATION WITH REPRESENTATIVES OF THE APPROPRIATE PARTIES.
8. ALL WORK SHALL BE PERFORMED IN ACCORDANCE WITH THESE PLANS AND SPECIFICATIONS AND THE REQUIREMENTS AND STANDARDS OF THE LOCAL GOVERNING AUTHORITY.
9. THE GEOTECHNICAL REPORT AND RECOMMENDATIONS SET FORTH THEREIN ARE A PART OF THE REQUIRED CONSTRUCTION DOCUMENTS AND IN CASE OF CONFLICT SHALL TAKE PRECEDENCE UNLESS SPECIFICALLY NOTED OTHERWISE ON THE PLANS. THE CONTRACTOR SHALL NOTIFY THE ENGINEER IN WRITING OF ANY SUCH DISCREPANCY BETWEEN GEOTECHNICAL REPORT AND PLANS, ETC.
10. THE PROPERTY SURVEY SHALL BE CONSIDERED A PART OF THESE PLANS.
11. THESE PLANS ARE BASED ON INFORMATION PROVIDED TO BOHLER ENGINEERING AT THE TIME OF PLAN PREPARATION. CONTRACTOR SHALL FIELD VERIFY EXISTING CONDITIONS AND NOTIFY BOHLER ENGINEERING IF ACTUAL SITE CONDITIONS DIFFER FROM THOSE SHOWN ON THE PLAN, OR IF THE PROPOSED WORK WOULD BE INHIBITED BY ANY OTHER SITE FEATURES.
12. ALL DIMENSIONS SHOWN ON THE PLANS SHALL BE FIELD VERIFIED BY THE CONTRACTOR PRIOR TO CONSTRUCTION. CONTRACTOR SHALL NOTIFY ENGINEER IN WRITING IF ANY DISCREPANCIES EXIST PRIOR TO PROCEEDING WITH CONSTRUCTION. NO EXTRA COMPENSATION SHALL BE PAID TO THE CONTRACTOR FOR WORK HAVING TO BE REDONE DUE TO DIMENSIONS OR GRADES SHOWN INCORRECTLY ON THESE PLANS IF SUCH NOTIFICATION HAS NOT BEEN GIVEN.
13. CONTRACTOR SHALL REFER TO THE ARCHITECTURAL/BUILDING PLANS FOR EXACT LOCATIONS AND DIMENSIONS OF ENTRY/EXIT POINTS, ELEVATIONS, PRECISE BUILDING DIMENSIONS, EXACT BUILDING UTILITY LOCATIONS.
14. DEBRIS SHALL NOT BE BURIED ON THE SUBJECT SITE AND ALL UNSUITABLE EXCAVATED HAZARDOUS MATERIAL, AND DEBRIS (SOLID WASTE) SHALL BE DISPOSED OF IN ACCORDANCE WITH ALL TOWN, COUNTY, STATE AND FEDERAL LAWS AND APPLICABLE CODES.
15. CONTRACTOR IS RESPONSIBLE FOR ALL SHORING REQUIRED DURING EXCAVATION (TO BE PERFORMED IN ACCORDANCE WITH CURRENT OSHA STANDARDS) AND ANY ADDITIONAL PROVISIONS TO ASSURE STABILITY OF CONTIGUOUS STRUCTURES, AS FIELD CONDITIONS DICTATE.
16. CONTRACTOR IS TO EXERCISE EXTREME CARE WHEN PERFORMING ANY WORK ACTIVITIES ADJACENT TO PAVEMENT, STRUCTURES, ETC. TO REMAIN. CONTRACTOR SHALL BE RESPONSIBLE FOR TAKING THE APPROPRIATE MEASURES AS NECESSARY TO ENSURE THE STRUCTURAL STABILITY OF PAVEMENT, STRUCTURES, ETC. TO REMAIN, AND TO PROVIDE A SAFE WORK AREA.
17. CONTRACTOR IS RESPONSIBLE FOR DOCUMENTING ALL EXISTING DAMAGE AND FOR NOTIFYING CONSTRUCTION MANAGER PRIOR TO START OF CONSTRUCTION. CONTRACTOR IS RESPONSIBLE FOR REPAIRING THE DAMAGE DONE TO ANY EXISTING ITEM DURING CONSTRUCTION SUCH AS BUT NOT LIMITED TO DRAINAGE, UTILITIES, PAVEMENT, STRIPING, CURB, ETC. THE CONTRACTOR SHALL BE RESPONSIBLE FOR AND SHALL REPLACE ALL SIGNAL INTERCONNECT CABLE, CONDUITS, AND ANY UNDERGROUND ACCESSORY EQUIPMENT DAMAGED DURING CONSTRUCTION. REPAIR SHALL BE EQUAL TO OR BETTER THAN EXISTING CONDITIONS.
18. ALL CONCRETE SHALL HAVE THE MINIMUM COMPRESSIVE STRENGTH AT 28 DAYS AS INDICATED IN SPECIFICATIONS UNLESS OTHERWISE NOTED ON THE PLANS, DETAILS AND/OR GEOTECHNICAL REPORT.
19. ENGINEER IS NOT RESPONSIBLE FOR CONSTRUCTION METHODS/MEANS FOR COMPLETION OF THE WORK DEPICTED ON THESE PLANS NOR ANY CONFLICTS/SCOPE REVISIONS WHICH RESULT FROM SAME. CONTRACTOR IS RESPONSIBLE FOR DETERMINING METHODS/MEANS FOR COMPLETION OF THE WORK PRIOR TO THE COMMENCEMENT OF CONSTRUCTION AND NOTIFICATION OF OWNER AND ENGINEER OF RECORD WHEN A CONFLICT IS IDENTIFIED.
20. ENGINEER OF RECORD IS NOT RESPONSIBLE FOR JOB SITE SAFETY NOR HAVE THEY BEEN RETAINED FOR SUCH PURPOSES.
21. ALL CONTRACTORS MUST CARRY STATUTORY WORKER'S COMPENSATION INSURANCE, EMPLOYER'S LIABILITY INSURANCE AND APPROPRIATE LIMITS OF COMMERCIAL GENERAL LIABILITY INSURANCE (CGL). ALL CONTRACTORS MUST HAVE THEIR CGL POLICIES ENDORSED TO NAME BOHLER ENGINEERING, AND ITS SUB-CONSULTANTS AS ADDITIONAL INSURED AND TO PROVIDE CONTRACTUAL LIABILITY COVERAGE SUFFICIENT TO INSURE THE HOLD HARMLESS AND INDEMNITY OBLIGATIONS ASSUMED BY THE CONTRACTORS. ALL CONTRACTORS MUST FURNISH BOHLER ENGINEERING WITH CERTIFICATIONS OF INSURANCE AS EVIDENCE OF THE REQUIRED INSURANCE PRIOR TO COMMENCING WORK AND UPON RENEWAL OF EACH POLICY DURING THE ENTIRE PERIOD OF CONSTRUCTION. IN ADDITION, ALL CONTRACTORS WILL, TO THE FULLEST EXTENT PERMITTED BY LAW, INDEMNIFY AND HOLD HARMLESS BOHLER ENGINEERING AND ITS SUB-CONSULTANTS FROM AND AGAINST ANY DAMAGES, LIABILITIES OR COSTS, INCLUDING REASONABLE ATTORNEYS' FEES AND DEFENSE COSTS, ARISING OUT OF OR IN ANY WAY CONNECTED WITH THE PROJECT, INCLUDING ALL CLAIMS BY EMPLOYEES OF THE CONTRACTORS.
22. NEITHER THE PROFESSIONAL ACTIVITIES OF BOHLER ENGINEERING, NOR THE PRESENCE OF BOHLER ENGINEERING OR ITS EMPLOYEES AND SUB-CONSULTANTS AT A CONSTRUCTION/PROJECT SITE, SHALL RELIEVE THE GENERAL CONTRACTOR OF ITS OBLIGATIONS, DUTIES AND RESPONSIBILITIES INCLUDING, BUT NOT LIMITED TO, CONSTRUCTION MEANS, METHODS, SEQUENCE, TECHNIQUES OR PROCEDURES NECESSARY FOR PERFORMING, SUPERINTENDING AND COORDINATING THE WORK IN ACCORDANCE WITH THE CONTRACT DOCUMENTS AND ANY HEALTH OR SAFETY PRECAUTIONS REQUIRED BY ANY REGULATORY AGENCIES. BOHLER ENGINEERING AND ITS PERSONNEL HAVE NO AUTHORITY TO EXERCISE ANY CONTROL OVER ANY CONSTRUCTION CONTRACTOR OR ITS EMPLOYEES IN CONNECTION WITH THEIR WORK OR ANY HEALTH OR SAFETY PROGRAMS OR PROCEDURES. THE GENERAL CONTRACTOR SHALL BE SOLELY RESPONSIBLE FOR JOB SITE SAFETY. BOHLER ENGINEERING SHALL BE INDEMNIFIED BY THE GENERAL CONTRACTOR AND SHALL BE MADE ADDITIONAL INSURED UNDER THE GENERAL CONTRACTOR'S POLICIES OF GENERAL LIABILITY INSURANCE.
23. BOHLER ENGINEERING SHALL REVIEW AND APPROVE OR TAKE OTHER APPROPRIATE ACTION ON THE CONTRACTOR SUBMITTALS, SUCH AS SHOP DRAWINGS, PRODUCT DATA, SAMPLES, AND OTHER DATA, WHICH THE CONTRACTOR IS REQUIRED TO SUBMIT, BUT ONLY FOR THE LIMITED PURPOSE OF CHECKING FOR CONFORMANCE WITH THE DESIGN CONCEPT AND THE INFORMATION SHOWN IN THE CONSTRUCTION MEANS OR METHODS, COORDINATION OF THE WORK WITH OTHER TRADES, OR CONSTRUCTION SAFETY PRECAUTIONS, ALL OF WHICH ARE THE SOLE RESPONSIBILITY OF THE CONTRACTOR. BOHLER ENGINEERING'S REVIEW SHALL BE CONDUCTED WITH REASONABLE PROMPTNESS WHILE ALLOWING SUFFICIENT TIME TO PERMIT ADEQUATE REVIEW. REVIEW OF A SPECIFIC ITEM SHALL NOT INDICATE THAT BOHLER ENGINEERING HAS REVIEWED THE ENTIRE ASSEMBLY OF WHICH THE ITEM IS A COMPONENT. BOHLER ENGINEERING SHALL NOT BE RESPONSIBLE FOR ANY DEVIATIONS FROM THE CONSTRUCTION DOCUMENTS NOT BROUGHT TO THE ATTENTION OF BOHLER ENGINEERING IN WRITING BY THE CONTRACTOR. BOHLER ENGINEERING SHALL NOT BE REQUIRED TO REVIEW PARTIAL SUBMISSIONS OR THOSE FOR WHICH SUBMISSIONS OF CORRELATED ITEMS HAVE NOT BEEN RECEIVED.
24. IN AN EFFORT TO RESOLVE ANY CONFLICTS THAT ARISE DURING THE DESIGN AND CONSTRUCTION OF THE PROJECT OR FOLLOWING THE COMPLETION OF THE PROJECT, BOHLER ENGINEERING AND THE CONTRACTOR MUST AGREE THAT ALL DISPUTES BETWEEN THEM ARISING OUT OF OR RELATING TO THIS AGREEMENT OR THE PROJECT SHALL BE SUBMITTED TO NON-BINDING MEDIATION UNLESS THE PARTIES MUTUALLY AGREE OTHERWISE.
25. THE CONTRACTOR MUST INCLUDE A MEDIATION PROVISION IN ALL AGREEMENTS WITH INDEPENDENT SUBCONTRACTORS AND CONSULTANTS RETAINED FOR THE PROJECT AND TO REQUIRE ALL INDEPENDENT CONTRACTORS AND CONSULTANTS ALSO TO INCLUDE A SIMILAR MEDIATION PROVISION IN ALL AGREEMENTS WITH THEIR SUBCONTRACTORS, SUB-CONSULTANTS, SUPPLIERS AND FABRICATORS, THEREBY PROVIDING FOR MEDIATION AS THE PRIMARY METHOD FOR DISPUTE RESOLUTION BETWEEN THE PARTIES TO ALL THOSE AGREEMENTS.
26. IF THE CONTRACTOR DEVIATES FROM THE PLANS AND SPECIFICATIONS, INCLUDING THE NOTES CONTAINED THEREON, WITHOUT FIRST OBTAINING PRIOR WRITTEN AUTHORIZATION FOR SUCH DEVIATIONS FROM THE OWNER AND ENGINEER, IT SHALL BE RESPONSIBLE FOR THE PAYMENT OF ALL COSTS TO CORRECT ANY WORK DONE, ALL FINES OR PENALTIES ASSESSED WITH RESPECT THERETO AND ALL COMPENSATORY OR PUNITIVE DAMAGES RESULTING THEREFROM. THE CONTRACTOR SHALL INDEMNIFY AND HOLD THE OWNER AND ENGINEER HARMLESS FROM ALL SUCH COSTS TO CORRECT ANY SUCH WORK AND FROM ALL SUCH FINES AND PENALTIES, COMPENSATION AND PUNITIVE DAMAGES AND COSTS OF ANY NATURE RESULTING THEREFROM.

GENERAL GRADING & UTILITY PLAN NOTES

1. LOCATION OF ALL EXISTING AND PROPOSED SERVICES ARE APPROXIMATE AND MUST BE CONFIRMED INDEPENDENTLY WITH LOCAL UTILITY COMPANIES PRIOR TO COMMENCEMENT OF ANY CONSTRUCTION OR EXCAVATION. SANITARY SEWER AND ALL OTHER UTILITY SERVICE CONNECTION POINTS SHALL BE CONFIRMED INDEPENDENTLY BY THE CONTRACTOR IN FIELD PRIOR TO THE COMMENCEMENT OF CONSTRUCTION. ALL DISCREPANCIES SHALL BE REPORTED IMMEDIATELY IN WRITING TO THE ENGINEER. CONSTRUCTION SHALL COMMENCE BEGINNING AT THE LOWEST INVERT (POINT OF CONNECTION) AND PROGRESS UP GRADIENT. ALL PROPOSED INTERFACE POINTS (CROSSINGS) WITH EXISTING UNDERGROUND UTILITIES SHALL BE FIELD VERIFIED BY TEST PIT PRIOR TO COMMENCEMENT OF CONSTRUCTION.
2. ALL UTILITIES AND SERVICES INCLUDING BUT NOT LIMITED TO GAS, WATER, ELECTRIC, SANITARY AND STORM SEWER, TELEPHONE, CABLE, FIBER OPTIC CABLE, ETC. WITHIN THE LIMITS OF DISTURBANCE SHALL BE VERTICALLY AND HORIZONTALLY LOCATED. THE CONTRACTOR SHALL USE AND COMPLY WITH THE REQUIREMENTS OF THE APPLICABLE UTILITY NOTIFICATION SYSTEM TO LOCATE ALL THE UNDERGROUND UTILITIES. THE CONTRACTOR IS RESPONSIBLE FOR REPAIRS OF DAMAGE TO ANY EXISTING UTILITIES DURING CONSTRUCTION AT NO COST TO THE OWNER.
3. IT IS THE RESPONSIBILITY OF THE CONTRACTOR TO REVIEW ALL OF THE DRAWINGS AND SPECIFICATIONS ASSOCIATED WITH THE PROJECT WORK SCOPE PRIOR TO THE INITIATION OF CONSTRUCTION. SHOULD THE CONTRACTOR FIND A CONFLICT WITH THE DOCUMENTS RELATIVE TO THE SPECIFICATIONS OR THE RELATIVE CODES, IT IS THE CONTRACTOR'S RESPONSIBILITY TO NOTIFY BOHLER ENGINEERING IN WRITING PRIOR TO THE START OF CONSTRUCTION. FAILURE BY THE CONTRACTOR TO NOTIFY THE PROJECT ENGINEER SHALL CONSTITUTE ACCEPTANCE OF FULL RESPONSIBILITY BY THE CONTRACTOR TO COMPLETE THE SCOPE OF WORK AS DEFINED BY THE DRAWINGS AND IN FULL COMPLIANCE WITH LOCAL REGULATIONS AND CODES.
4. DEFINE AND LOCATE VERTICALLY AND HORIZONTALLY ALL ACTIVE UTILITY AND/OR SERVICE SYSTEMS THAT ARE TO BE REMOVED. THE CONTRACTOR IS RESPONSIBLE TO PROTECT AND MAINTAIN ALL ACTIVE SYSTEMS THAT ARE NOT BEING REMOVED/RELOCATED DURING SITE ACTIVITY.
5. THE CONTRACTOR SHALL FAMILIARIZE THEMSELVES WITH THE APPLICABLE UTILITY SERVICE PROVIDER REQUIREMENTS AND IS RESPONSIBLE FOR ALL COORDINATION REGARDING UTILITY DEMOLITION AS IDENTIFIED OR REQUIRED FOR PROJECT. THE CONTRACTOR SHALL PROVIDE THE OWNER WRITTEN NOTIFICATION THAT THE EXISTING UTILITIES AND SERVICES HAVE BEEN TERMINATED AND ABANDONED IN ACCORDANCE WITH JURISDICTION AND UTILITY COMPANY REQUIREMENTS.
6. CONTRACTOR IS RESPONSIBLE FOR COORDINATION OF SITE PLAN DOCUMENTS AND ARCHITECTURAL DESIGN FOR EXACT BUILDING UTILITY CONNECTION LOCATIONS, GREASE TRAP REQUIREMENTS/DETAILS, DOOR ACCESS, AND EXTERIOR GRADING. THE UTILITY SERVICE SIZES ARE TO BE DETERMINED BY THE ARCHITECT. THE CONTRACTOR SHALL COORDINATE INSTALLATION OF UTILITIES/SERVICES WITH THE INDIVIDUAL COMPANIES, TO AVOID CONFLICTS AND ENSURE PROPER DEPTHS ARE ACHIEVED. THE JURISDICTION UTILITY REQUIREMENTS SHALL ALSO BE MET, AS WELL AS COORDINATING THE UTILITY TIE-INS/CONNECTIONS PRIOR TO CONNECTING TO THE EXISTING UTILITY/SERVICE. WHERE CONFLICTS EXIST WITH THESE SITE PLANS, ENGINEER IS TO BE NOTIFIED PRIOR TO CONSTRUCTION TO RESOLVE SAME.
7. WATER SERVICE MATERIALS, BURIAL DEPTH, AND COVER REQUIREMENTS SHALL BE SPECIFIED BY THE LOCAL UTILITY COMPANY. CONTRACTOR'S PRICE FOR WATER SERVICE SHALL INCLUDE ALL FEES AND APPURTENANCES REQUIRED BY THE UTILITY TO PROVIDE A COMPLETE WORKING SERVICE.
8. ALL NEW UTILITIES/SERVICES, INCLUDING ELECTRIC, TELEPHONE, CABLE TV, ETC. ARE TO BE INSTALLED UNDERGROUND. ALL NEW UTILITIES/SERVICES SHALL BE INSTALLED IN ACCORDANCE WITH THE UTILITY/SERVICE PROVIDER INSTALLATION SPECIFICATIONS AND STANDARDS.
9. SITE GRADING SHALL BE PERFORMED IN ACCORDANCE WITH THESE PLANS AND SPECIFICATIONS AND THE RECOMMENDATIONS SET FORTH IN THE GEOTECHNICAL REPORT REFERENCED IN THIS PLAN SET. THE CONTRACTOR SHALL BE RESPONSIBLE FOR REMOVING AND REPLACING WITH SUITABLE MATERIALS AS SPECIFIED IN THE GEOTECHNICAL REPORT. ALL EXCAVATED OR FILLED AREAS SHALL BE COMPACTED AS OUTLINED IN THE GEOTECHNICAL REPORT. MOISTURE CONTENT AT TIME OF PLACEMENT SHALL BE SUBMITTED IN COMPACTION REPORT PREPARED BY A QUALIFIED GEOTECHNICAL ENGINEER, REGISTERED WITH THE STATE WHERE THE WORK IS PERFORMED, VERIFYING THAT ALL FILLED AREAS AND SUB-GRADE AREAS WITHIN THE BUILDING PAD AREA AND AREAS TO BE PAVED HAVE BEEN COMPACTED IN ACCORDANCE WITH THESE PLANS AND SPECIFICATIONS AND THE RECOMMENDATIONS SET FORTH IN THE GEOTECHNICAL REPORT. SUB-BASE MATERIAL FOR SIDEWALKS, CURB, OR ASPHALT SHALL BE FREE OF ORGANICS AND OTHER UNSUITABLE MATERIALS. SHOULD SUB-BASE BE DEEMED UNSUITABLE BY OWNER OR OWNER'S REPRESENTATIVE, SUB-BASE IS TO BE REMOVED AND FILLED WITH APPROVED FILL MATERIAL COMPACTED AS DIRECTED BY THE GEOTECHNICAL REPORT.
10. ALL FILL, COMPACTION, AND BACKFILL MATERIALS REQUIRED FOR UTILITY INSTALLATION SHALL BE AS PER THE RECOMMENDATIONS PROVIDED IN THE GEOTECHNICAL REPORT AND SHALL BE COORDINATED WITH THE APPLICABLE UTILITY COMPANY SPECIFICATIONS.
11. THE CONTRACTOR SHALL COMPLY TO THE FULLEST EXTENT WITH THE LATEST OSHA STANDARDS AND REGULATIONS, OR ANY OTHER AGENCY HAVING JURISDICTION FOR EXCAVATION AND TRENCHING PROCEDURES. THE CONTRACTOR IS RESPONSIBLE FOR DETERMINING THE "MEANS AND METHODS" REQUIRED TO MEET THE INTENT AND PERFORMANCE CRITERIA OF OSHA, AS WELL AS ANY OTHER ENTITY THAT HAS JURISDICTION FOR EXCAVATION AND/OR TRENCHING PROCEDURES.
12. PAVEMENT SHALL BE SAW CUT IN STRAIGHT LINES TO THE FULL DEPTH OF THE EXISTING PAVEMENT. ALL DEBRIS FROM REMOVAL OPERATIONS SHALL BE REMOVED FROM THE SITE AT THE TIME OF EXCAVATION. STOCKPILING OF DEBRIS WILL NOT BE PERMITTED.
13. THE TOPS OF EXISTING MANHOLES, INLET STRUCTURES, AND SANITARY CLEANOUT TOPS SHALL BE ADJUSTED, IF REQUIRED, TO MATCH PROPOSED GRADES IN ACCORDANCE WITH ALL APPLICABLE STANDARDS.
14. THE CONTRACTOR IS RESPONSIBLE FOR VERIFICATION OF EXISTING TOPOGRAPHIC INFORMATION AND UTILITY INVERT ELEVATIONS PRIOR TO COMMENCEMENT OF ANY CONSTRUCTION. CONTRACTOR TO ENSURE 0.75% MINIMUM SLOPE ALONG ALL ISLANDS, GUTTERS, AND CURBS; 1.0% ON ALL CONCRETE SURFACES; AND 1.0% MINIMUM ON ASPHALT, TO PREVENT PONDING. ANY DISCREPANCIES THAT MAY AFFECT THE PUBLIC SAFETY OR PROJECT COST MUST BE IDENTIFIED TO THE ENGINEER IN WRITING IMMEDIATELY. PROCEEDING WITH CONSTRUCTION WITHOUT NOTIFICATION IS DONE SO AT THE CONTRACTOR'S OWN RISK.
15. PROPOSED TOP OF CURB ELEVATIONS ARE GENERALLY 6" ABOVE EXISTING LOCAL ASPHALT GRADE UNLESS OTHERWISE NOTED. FIELD ADJUST TO CREATE A MINIMUM OF 0.75% GUTTER GRADE ALONG CURB FACE. ENGINEER TO APPROVE FINAL CURBING CUT SHEETS PRIOR TO INSTALLATION.
16. REFER TO SITE PLAN FOR ADDITIONAL NOTES.
17. IN CASE OF DISCREPANCIES BETWEEN PLANS OR RELATIVE TO OTHER PLANS, THE SITE PLAN WILL TAKE PRECEDENCE. IMMEDIATELY NOTIFY THE ENGINEER IN WRITING OF ANY CONFLICTS.
18. CONTRACTOR SHALL BE REQUIRED TO SECURE ALL NECESSARY PERMITS AND APPROVALS FOR ALL OFF-SITE MATERIAL SOURCES AND DISPOSAL FACILITIES. CONTRACTOR SHALL SUPPLY A COPY OF APPROVALS TO ENGINEER AND OWNER PRIOR TO INITIATING WORK.

REFER TO SITE PLAN FOR ZONING ANALYSIS TABLE

REFER TO SOIL EROSION CONTROL NOTES AND DETAILS FOR TYPICAL NOTES AND DETAILS

REFER TO LANDSCAPING NOTES/ DETAILS FOR TYPICAL NOTES AND DETAILS

TYPICAL ABBREVIATIONS

KEY	DESCRIPTION
BC	BOTTOM CURB
TC	TOP CURB
EXIST	EXISTING
BM	BENCHMARK
EOP	EDGE OF PAVEMENT
CL	CENTERLINE
FF	FINISHED FLOOR
GF	GARAGE FLOOR (AT DOOR)
VIF	VERIFY IN FIELD
GC	GENERAL CONTRACTOR
BF	BOTTOM OF FOOTING
CF	CELLAR FLOOR
TF	TOP OF FOUNDATION
OCS	OUTLET CONTROL STRUCTURE
BOW	BOTTOM OF WALL GRADE
TOW	TOP OF WALL
GL	GRADE LOWER SIDE OF WALL
GH	GRADE HIGHER SIDE OF WALL
HP	HIGH POINT
LP	LOW POINT
TYP	TYPICAL
INT	INTERSECTION
PC	POINT OF CURVATURE
PT	POINT OF TANGENCY
PI	POINT OF INTERSECTION
PVI	POINT OF VERTICAL INTERSECTION
STA	STATION
GR	GRATE
G	GRADE
INV	INVERT
DIP	DUCTILE IRON PIPE
PVC	POLYVINYL CHLORIDE PIPE
HDPE	HIGH DENSITY POLYETHYLENE PIPE
RCP	REINFORCED CONCRETE PIPE
S	SLOPE
PROP	PROPOSED
BK	BLOCK
TBR	TO BE REMOVED
TPF	TREE PROTECTION FENCE
BLDG	BUILDING
SF	SQUARE FEET
MH	MANHOLE
STM	STORM
SAN	SANITARY
CONC	CONCRETE
ARCH	ARCHITECTURAL
DEP	DEPRESSED
H'CAP	HANDICAP
MIN	MINIMUM
MAX	MAXIMUM
No	NUMBER
W	WIDE
DEC	DECORATIVE
ELEV	ELEVATION
U/G	UNDERGROUND
ROW	RIGHT OF WAY
LF	LINEAR FOOT
LOD	LIMIT OF DISTURBANCE
HOR	HORIZONTAL
LSA	LANDSCAPED AREA
±	PLUS OR MINUS
°	DEGREE
Ø	DIAMETER
R	RADIUS
ME	MEET EXISTING

TYPICAL LEGEND

EXISTING		PROPOSED
	PROPERTY LINE	
	SETBACK	
	EASEMENT	
	CURB	
	STORM MANHOLE	D
	SEWER MANHOLE	S
	CATCH BASIN	
3	WETLAND FLAG	
	WETLAND LINE	
262.39×	SPOT ELEVATION	
TC 263.31× G 262.87	TOP & BOTTOM OF CURB	
261	CONTOUR	
	FLOW ARROW	
	PAINTED ARROW	
G G	GAS LINE	G G
T T	TELEPHONE LINE	T T
E E	ELECTRIC LINE	E E
C C	CABLE LINE	C C
W W	FIRE LINE	F F
W W	WATER LINE	W W
OH OH	OVERHEAD WIRE	OH OH
	STORM PIPE	
	SANITARY LINE	S S
	DRAINAGE BASIN	
	BERM LINE	
	SAWCUT LINE	
	SIGN	
	PARKING COUNT	8
	LIGHT POLE	
	SILT FENCE	SF SF
	1 FOOT CANDLE	1FC
	RIDGE LINE	
	LIMIT OF DISTURBANCE	
	INLET PROTECTION	
	GUIDE RAIL	I I
	DIVERSION SWALE	DD DD
	UTILITY POLE	
	CONSTRUCTION ENTRANCE	
	ZONE LINE	

BOHLER ENGINEERING

CIVIL & CONSULTING ENGINEERS
SURVEYORS
PROJECT MANAGERS
ENVIRONMENTAL CONSULTANTS
LANDSCAPE ARCHITECTS

CORPORATE OFFICE:
♦ WARREN, NJ
OFFICES:
♦ SOUTHBOROUGH, MA ♦ CHALFONT, PA
♦ BOWIE, MD ♦ PHILADELPHIA, PA
♦ TOWSON, MD ♦ STERLING, VA
♦ ALBANY, NY ♦ WARRENTON, VA
♦ RONKONKOMA, NY ♦ FORT LAUDERDALE, FL
♦ CENTER VALLEY, PA ♦ TAMPA, FL

THE INFORMATION, DESIGN AND CONTENT OF THIS PLAN ARE PROPRIETARY AND SHALL NOT BE COPIED OR USED FOR ANY PURPOSE WITHOUT PRIOR WRITTEN AUTHORIZATION FROM BOHLER ENGINEERING. ONLY APPROVED, SIGNED AND SEALED PLANS SHALL BE UTILIZED FOR CONSTRUCTION PURPOSES. © 2008 BOHLER ENGINEERING.

REVISIONS

REV	DATE	COMMENT	BY
1	07-06-2011	CON-COM SUBMISSION	JAB
2			
3			
4			
5			
6			
7			
8			
9			

STOP - CALL BEFORE YOU DIG!

THE FOLLOWING STATES REQUIRE NOTIFICATION BY EXCAVATORS, DESIGNERS, OR ANY PERSON PREPARING TO DISTURB THE EARTH'S SURFACE ANYWHERE IN THE STATE.
(MA, ME, NH, RI, VT 1-888-344-7233)
(CT 1-800-922-4455)
(NY 1-800-962-7962)

NOT APPROVED FOR CONSTRUCTION

PROJECT No.:	W111022
DRAWN BY:	CFD
CHECKED BY:	JAB/SPD
DATE:	05/23/2011
SCALE:	AS NOTED
CAD I.D.:	w111022ss1

PROJECT:

SITE PLAN

FOR

Pulte Homes

THE RESIDENCES AT QUAIL RIDGE

LOCATION OF SITE
354 B GREAT ROAD & SKYLINE DR.
TOWN OF ACTON
MIDDLESEX COUNTY, MA

BOHLER ENGINEERING
352 TURNPIKE ROAD
SOUTHBOROUGH, MA 01772
Phone: (508) 480-9900
Fax: (508) 480-9080
www.BohlerEngineering.com

S.P. DECOURSEY
PROFESSIONAL ENGINEER
MASSACHUSETTS LICENSE No. 36424
NEW HAMPSHIRE LICENSE No. 9308
MAINE LICENSE No. 8408
VERMONT LICENSE No. 7110
CONNECTICUT LICENSE No. 23862
RHODE ISLAND LICENSE No. 7990

SHEET TITLE:

NOTES SHEET

SHEET NUMBER:

REV 0 - 05/23/2011

P:\11\W111022\DWG\w111022ss1.dwg, 02-Notes, 4/23/2010, 10:17:14 AM, jcerkanowicz, XeroX510-1.pc3, User634, 1:0.9999997

N

W E S

LEGEND

- REGULAR UNIT
- AFFORDABLE HOUSING

N/F ACORN PARK REALTY TRUST

N/F SOULOTIS

N/F MONCRIEFF

N/F PURDOM

N/F CRING

N/F WONN

N/F PENTZ

N/F FISCHER

N/F SHANTI

N/F KRISHNAN

N/F OFORI

N/F LUI & ZHONG

N/F SUNEEL

N/F UTT

N/F SHIMIZU

N/F JANI

N/F LAPINSKI

N/F TOWN OF CONCORD

N/F TOWN OF CONCORD WATER WORKS

N/F TOWN OF ACTON

HAZELNUT STREET

ACORN PARK DR.

QUAIL RIDGE DRIVE

PARKLAND LANE

FOOT PATH

20' WIDE TRAIL EASEMENT

30' PROPERTY LINE OFFSETYARD SETBACK

40' WIDE RIGHT OF WAY AS SHOWN ON PLAN 453 & 454 OF 1909 (SEE DEED BOOK 3457 PAGE 221)

GATE

VERNAL POOL

PROP. INFILTRATION BASIN #12

PROP. DETENTION BASIN #10

PROP. INFILTRATION BASIN #9

PROP. INFILTRATION BASIN #31

PROP. INFILTRATION BASIN #13

PROP. DETENTION BASIN #15

PROP. DETENTION BASIN #17

LOT 1
2,304,406 SF±
52.9 AC.±

COMMON LAND OPEN SPACE PARCEL A

3' WIDE PATH EXTENSION

100 YEAR FLOOD PLAIN PER FEMA FIRM MAP PANEL #25017C0243E JUNE 4, 2010

FLOOD PLAIN

200' RIVER FRONT AREA

EDGE OF BORDERING VEGETATED WETLANDS

ISOLATED WETLAND

GRAVEL CART PATH

WOOD BRIDGE

CWW MON FOUND

DHF

N67°46'43"W 95.78'

N43°53'34"E 61.00'

N19°29'56"W 322.70'

S00°37'54"W 438.20'

S00°52'22"W 467.15'

S53°17'56"E 205.15'

N86°14'21"E 628.82'

N72°12'07"E 682.88'

N19°43'38"W 123.83'

N19°12'25"W 337.99'

N13°13'36"W 20.71'

N09°58'04"W 45.04'

N09°36'26"W 261.78'

N09°55'33"W 228.54'

N09°44'17"W 158.04'

N09°44'17"W 156.04'

N09°47'18"W 113.68'

S01°56'32"W 16.50'

N01°56'32"E 6.50'

N86°52'16"W 29.68'

S84°42'52"E 72.96'

S01°44'55"E 245.01'

N67°46'43"W 139.42'

894.42'

N88°04'25"W 103.73'

N87°21'37"W 39.71'

N89°19'07"W 116.50'

N88°03'28"W 210.97'

N88°03'28"W 129.84'

N88°03'28"W 16.50'

348.94'

100 50 25 0 100

1"= 100'

LAND USE DATA

DIMENSIONAL REQUIREMENTS UNDER ZONING SECTION 9B (SENIOR RESIDENCE):

ZONING DISTRICT: RESIDENCE 10/8

	REQUIRED	PROVIDED
TRACT SIZE	8 ACRES	148.906 AC *
MAX. DENSITY	3 UNITS/ACRE	1.03 UNITS/ACRE
UNITS	446 MAX	153
AFFORDABLE UNITS	9 (5%)	8 (5%)
MIN. SETBACK FROM EXISTING STREET	45 FT	>45 FT
MIN. SETBACK FROM TRACT BOUNDARY	30 FT	>30 FT
MIN. SETBACK FROM COMMON LAND	10 FT	>10 FT
MIN. SEPARATION OF BUILDINGS (W/DOORS)	20 FT	>20 FT
MIN. SEPARATION OF BUILDINGS (NO DOORS)	10 FT	>10 FT
MAX. HEIGHT OF BUILDINGS	36 FT	>36 FT
MAX. HORIZONTAL DIMENSION OF A BUILDING	200 FT	±80 FT

* EXCLUDES LB DISTRICT AREA (155.546 AC.± TOTAL)

COMMON LAND REQUIREMENTS:	REQUIRED	PROVIDED
MIN. AREA OF COMMON LAND	74.453 (50%)	85.469 AC. (57.0%)**
WETLAND ON TRACT	—	21.2527 AC (14.27%)
UPLAND ON COMMON LAND	63.50 AC (85.73%)	69.56 AC (93.4%)**
MIN. AREA OF COMMON LAND LARGE PARCELS	59.562 AC (80%)	85.469 AC. (100%)**
MAX. IMPERVIOUS COVER ON COMMON LAND	4.436 AC (5%)	1.978 AC (2.3%)**

**PROVIDED ON COMMON LAND OPEN SPACE PARCEL A ALONE

PARKING REQUIREMENTS:	REQUIRED	PROVIDED
SINGLE FAMILY AND DUPLEX UNITS (153) 2 SPACES/DWELLING UNIT	306	4 SPACES/DWELLING UNITS
MULTIFAMILY DWELLING UNITS (36) 2 SPACES/DWELLING UNIT	72	N/A
SUPPORT AND CONVENIENCE SERVICES (SCS)		
RESTAURANT (51 SEAT) 1 SPACES/3 SEATS	17	UNCHANGED
GOLF COURSE (9 HOLE) 10 SPACES/HOLE	90****	
SCS TOTAL	107	150

**** IT IS ANTICIPATED THAT MANY OF THE USERS OF THE GOLF COURSE WILL PARK AT THEIR DWELLING UNIT

BOHLER ENGINEERING

CIVIL & CONSULTING ENGINEERS
SURVEYORS
PROJECT MANAGERS
ENVIRONMENTAL CONSULTANTS
LANDSCAPE ARCHITECTS

CORPORATE OFFICE:
◆ WARREN, NJ

OFFICES:
◆ SOUTHBOROUGH, MA
◆ BALTIMORE, MD
◆ TOWSON, MD
◆ LEESBURG, VA
◆ ROANOKE, VA
◆ ROMONCOMA, NY
◆ CENTER VALLEY, PA
◆ CHALFONT, PA
◆ PHILADELPHIA, PA
◆ STERLING, VA
◆ MANASSAS, VA
◆ FORT LAUDERDALE, FL
◆ TAMPA, FL

THESE DRAWINGS ARE THE PROPERTY OF BOHLER ENGINEERING AND ARE NOT TO BE USED IN WHOLE OR IN PART FOR ANY OTHER PROJECT WITHOUT THE EXPRESS WRITTEN PERMISSION FROM BOHLER ENGINEERING. ONLY APPROVED, SIGNED AND SEALED PLANS ARE VALID TO CONSTRUCT FROM. © 2010 BOHLER ENGINEERING

REVISIONS

REV	DATE	COMMENT	BY
1	07-06-2011	CON-COM SUBMISSION	JAB
2			
3			
4			
5			
6			
7			
8			
9			

THE FOLLOWING STATES REQUIRE NOTIFICATION BY EXCAVATORS, DESIGNERS, OR ANY PERSON PREPARING TO DISTURB THE EARTH'S SURFACE ANYWHERE IN THE STATE.
(MA, ME, NH, RI, VT 1-888-344-7233)
(CT 1-800-922-4455)
(NY 1-800-962-7962)

NOT APPROVED FOR CONSTRUCTION

PROJECT No.:	W111022
DRAWN BY:	CFD
CHECKED BY:	JAB/SPD
DATE:	05/23/2011
SCALE:	AS NOTED
CAD I.D.:	w111022ss1

PROJECT:

SITE PLAN

FOR

Pulte HOMES

THE RESIDENCES AT QUAIL RIDGE

LOCATION OF SITE
354 B GREAT ROAD & SKYLINE DR.
TOWN OF ACTON
MIDDLESEX COUNTY, MA

BOHLER ENGINEERING
352 TURNPIKE ROAD
SOUTHBOROUGH, MA 01772
Phone: (508) 480-9900
Fax: (508) 480-9080
www.BohlerEngineering.com

S.P. DECOURSEY
PROFESSIONAL ENGINEER
MASSACHUSETTS LICENSE No. 38424
NEW HAMPSHIRE LICENSE No. 9308
MAINE LICENSE No. 8408
VERMONT LICENSE No. 7110
CONNECTICUT LICENSE No. 23682
RHODE ISLAND LICENSE No. 7990

SHEET TITLE:

MASTER SITE PLAN "A"

SHEET NUMBER:

3 OF 37

REV 0 - 05/23/2011

P:\111\W111022\DWG\w111022ss1.dwg, 03-Overall Site Plan A, 4/22/2010, 10:17:14 AM, jordanowitz, Xerox5016-Lec3, User3A, 1.0999999

N

W E S

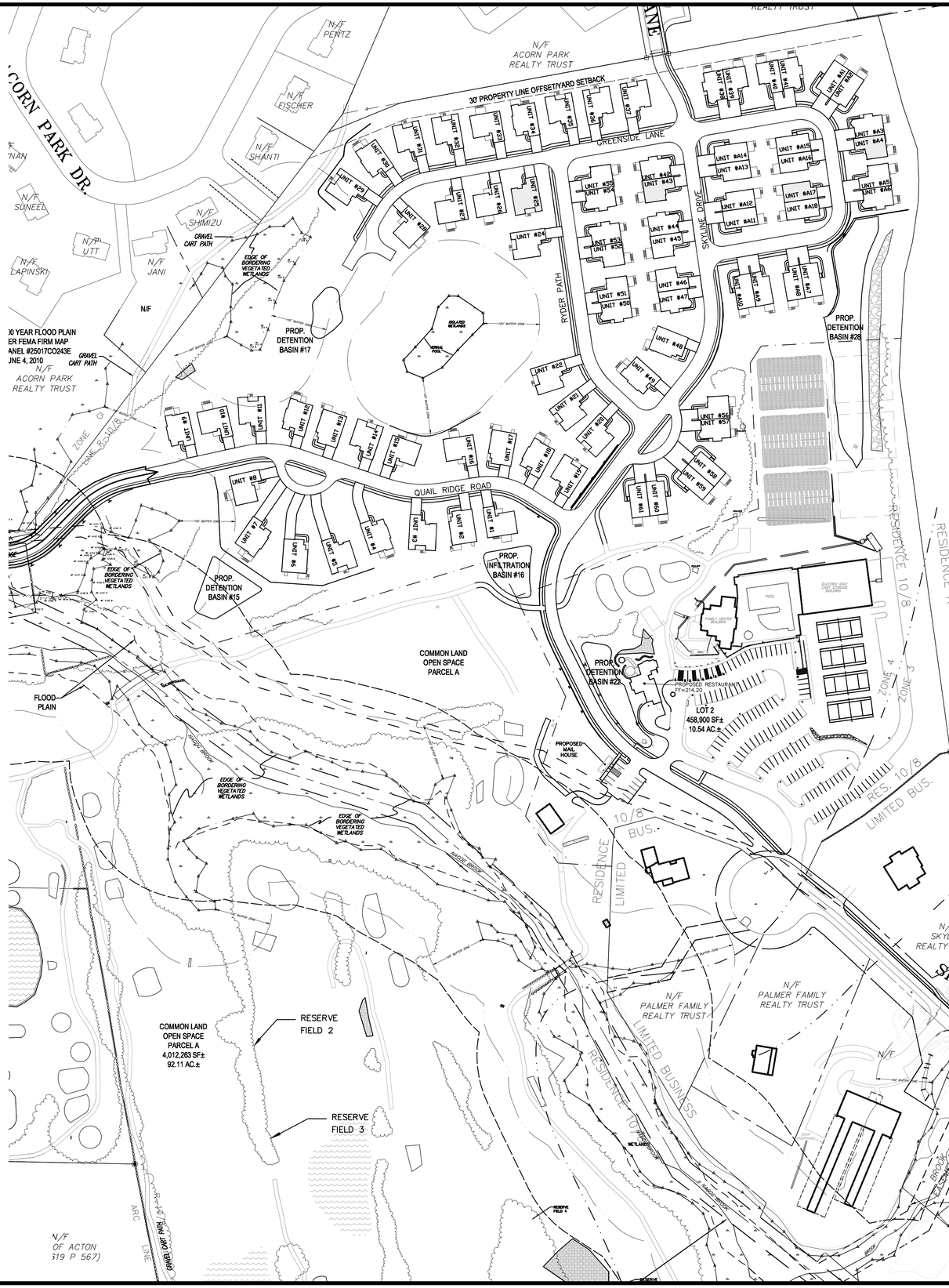

LEGEND

- REGULAR UNIT
- AFFORDABLE HOUSING

LAND USE DATA

DIMENSIONAL REQUIREMENTS UNDER ZONING SECTION 9B (SENIOR RESIDENCE):

ZONING DISTRICT: RESIDENCE 10/8

	REQUIRED	PROVIDED
TRACT SIZE	8 ACRES	148.906 AC *
MAX. DENSITY	3 UNITS/ACRE	1.03 UNITS/ACRE
UNITS	446 MAX	153
AFFORDABLE UNITS	9 (5%)	8 (5%)
MIN. SETBACK FROM EXISTING STREET	45 FT	>45 FT
MIN. SETBACK FROM TRACT BOUNDARY	30 FT	>30 FT
MIN. SETBACK FROM COMMON LAND	10 FT	>10 FT
MIN. SEPARATION OF BUILDINGS (W/DOORS)	20 FT	>20 FT
MIN. SEPARATION OF BUILDINGS (NO DOORS)	10 FT	>10 FT
MAX. HEIGHT OF BUILDINGS	36 FT	>36 FT
MAX. HORIZONTAL DIMENSION OF A BUILDING	200 FT	±80 FT

* EXCLUDES LB DISTRICT AREA (155.546 AC.± TOTAL)

COMMON LAND REQUIREMENTS:	REQUIRED	PROVIDED
MIN. AREA OF COMMON LAND	74.453 (50%)	85.469 AC. (57.0%)**
WETLAND ON TRACT	--	21.2527 AC (14.27%)
UPLAND ON COMMON LAND	63.50 AC (85.73%)	69.56 AC (93.4%)**
MIN. AREA OF COMMON LAND LARGE PARCELS	59.562 AC (80%)	85.469 AC. (100%)**
MAX. IMPERVIOUS COVER ON COMMON LAND	4.436 AC (5%)	1.978 AC (2.3%)**

**PROVIDED ON COMMON LAND OPEN SPACE PARCEL A ALONE

PARKING REQUIREMENTS:	REQUIRED	PROVIDED
SINGLE FAMILY AND DUPLEX UNITS (153) 2 SPACES/DWELLING UNIT	306	4 SPACES/DWELLING UNITS
MULTIFAMILY DWELLING UNITS (36) 2 SPACES/DWELLING UNIT	72	N/A
SUPPORT AND CONVENIENCE SERVICES (SCS)		
RESTAURANT (51 SEAT)		
1 SPACES/3 SEATS	17	UNCHANGED
GOLF COURSE (9 HOLE)		
10 SPACES/HOLE	90****	
SCS TOTAL	107	150

**** IT IS ANTICIPATED THAT MANY OF THE USERS OF THE GOLF COURSE WILL PARK AT THEIR DWELLING UNIT

BOHLER ENGINEERING

CIVIL & CONSULTING ENGINEERS
SURVEYORS
PROJECT MANAGERS
ENVIRONMENTAL CONSULTANTS
LANDSCAPE ARCHITECTS

CORPORATE OFFICE:
◆ WARREN, NJ

OFFICES:
◆ SOUTHBOROUGH, MA
◆ BOHLER, PA
◆ TOWSON, MD
◆ LAUREL, MD
◆ ROMONOMA, NY
◆ CENTER VALLEY, PA
◆ CHALFONT, PA
◆ PITTSBURGH, PA
◆ STERLING, VA
◆ RICHMOND, VA
◆ FORT LAUDERDALE, FL
◆ TAMPA, FL

THESE PLANS ARE THE PROPERTY OF BOHLER ENGINEERING AND ARE NOT TO BE USED IN WHOLE OR IN PART FOR ANY OTHER PROJECT WITHOUT THE EXPRESS WRITTEN PERMISSION FROM BOHLER ENGINEERING. ONLY AUTHORIZED SIGNED AND SEALED PLANS SHALL BE UTILIZED FOR CONSTRUCTION PURPOSES. © 2009 BOHLER ENGINEERING

REVISIONS

REV	DATE	COMMENT	BY
1	07-06-2011	CON-COM SUBMISSION	JAB
2			
3			
4			
5			
6			
7			
8			
9			

DIG SAFE! CALL BEFORE YOU DIG

THE FOLLOWING STATES REQUIRE NOTIFICATION BY EXCAVATORS, DESIGNERS, OR ANY PERSON PREPARING TO DISTURB THE EARTH'S SURFACE ANYWHERE IN THE STATE.
(MA, ME, NH, RI, VT 1-888-344-7233)
(CT 1-800-922-4455)
(NY 1-800-962-7962)

NOT APPROVED FOR CONSTRUCTION

PROJECT No.:	W111022
DRAWN BY:	CFD
CHECKED BY:	JAB/SPD
DATE:	05/23/2011
SCALE:	AS NOTED
CAD I.D.:	w111022ss1

PROJECT:

SITE PLAN

FOR

Pulte HOMES

THE RESIDENCES AT QUAIL RIDGE

LOCATION OF SITE
354 B GREAT ROAD & SKYLINE DR.
TOWN OF ACTON
MIDDLESEX COUNTY, MA

BOHLER ENGINEERING
352 TURNPIKE ROAD
SOUTHBOROUGH, MA 01772
Phone: (508) 480-9900
Fax: (508) 480-9080
www.BohlerEngineering.com

S.P. DECOURSEY
PROFESSIONAL ENGINEER
MASSACHUSETTS LICENSE No. 36424
NEW HAMPSHIRE LICENSE No. 9308
MAINE LICENSE No. 8408
VERMONT LICENSE No. 7110
CONNECTICUT LICENSE No. 23682
RHODE ISLAND LICENSE No. 7990

SHEET TITLE:

MASTER SITE PLAN "B"

SHEET NUMBER:

4
OF 37

REV 0 - 05/23/2011

P:\111\W111022\DWG\w111022ss1.dwg, 04-Overall Site Plan B, 4/22/2010, 10:17:14 AM, jordanowicz, Xerox5510-Lpc3, Lisen3ch, 1.0999999f

N

W E

S

MATCHLINE (SEE SHEET 6)

MATCHLINE (SEE SHEET 7)

EDGE OF BORDERING VEGETATED WETLANDS

100' BUFFER ZONE

100' VERNAL POOL BUFFER

LEDGE OUTCROP

BIT. CART PATH

WOOD BRIDGE

EXISTING PUTTING GREEN

EXISTING SAND TRAP

TOP BRIDGE ELEV.=228.6'

TOP BRIDGE ELEV.=225.2'

TOP BRIDGE ELEV.=224.1'

TOP BRIDGE ELEV.=227.0'

TOP WATER ELEV.=223.6'±

R-10/8 ZONE ARC LINE

PARKLAND DRIVE

EDGE DRIVE

PROP. INFILTRATION BASIN #10

PROP. INFILTRATION BASIN #9

PROP. INFILTRATION BASIN #31

PROP. GRAVELED TRAIL HEAD PARKING

PROP. 3' WIDE PATH EXTENSION

PROP. RETAINING WALL (TYP.)

PROP. STOCKADE FENCE

PROP. STOCKADE FENCE AND BAR

PROP. WATER GATES (TYP.)

PROP. GAS GATES (TYP.)

PROP. GAS SERVICE (TYP.)

PROP. SLOPED GRANITE CURBING AT ALL ROAD INTERSECTION ROUNDINGS (TYP.)

PROP. GUIDERAIL (TYP.)

PROP. 4' HIGH CHAIN LINK FENCE (TYP.)

PROP. ELECTRIC, TELEPHONE AND CABLE SERVICES (TYP.)

PROP. 1" WATER SERVICE AND CURB STOP (TYP.)

PROP. LOW PRESSURE SEWER SERVICE WITH CHECK VALVE (TYP.)

PROP. GATE

PROP. RIP-RAP SPILLWAY

PROP. RETAINING WALL WITH 4' HIGH FENCE ON TOP (TYP.)

LOWER PRESSURE SEWER FORCE MAIN MANHOLE (TYP.) SEE PROFILES

3' WIDE PATH EXTENSION

WATER LINE TO BE SLEEVED IN LOCATIONS WHERE 10' HORIZONTAL SEPARATION TO SEWER CANNOT BE ACHIEVED (TYP.)

VERNAL POOL

UNIT #68 UNIT #69 UNIT #70 UNIT #71 UNIT #72 UNIT #73 UNIT #74 UNIT #75 UNIT #76 UNIT #80 UNIT #81 UNIT #82 UNIT #83 UNIT #84 UNIT #85 UNIT #86 UNIT #87 UNIT #88 UNIT #97 UNIT #98 UNIT #99 UNIT #100 UNIT #102 UNIT #103 UNIT #104 UNIT #105 UNIT #106 UNIT #118 UNIT #120 UNIT #121 UNIT #122 UNIT #123 UNIT #124 UNIT #125 UNIT #132 UNIT #133 UNIT #135 UNIT #136 UNIT #137 UNIT #139 UNIT #140 UNIT #141

LEGEND

- REGULAR UNIT
- AFFORDABLE HOUSING

THIS PLAN TO BE UTILIZED FOR SITE LAYOUT PURPOSES ONLY

THIS PLAN TO BE UTILIZED FOR UTILITIES PURPOSES ONLY

40 20 10 0 40

1"= 40'

P:\111WV\111022\DWG\site\111022sit.dwg, 05-Site Plan A, 4/23/2010 5:10:13 PM, jsedaxemicz, Xerox3510-1ps3, User\34, 1.67999999"

BOHLER ENGINEERING

CORPORATE OFFICE:
◆ WARREN, NJ

OFFICES:
◆ CHALFONT, PA
◆ SOUTHBOROUGH, MA
◆ STERLING, VA
◆ TOWSON, MD
◆ LAWRENCEVILLE, NJ
◆ ROWAYTON, CT
◆ ROMONCOMA, NY
◆ FORT LAUDERDALE, FL
◆ CENTER VALLEY, PA
◆ TAMPA, FL

CIVIL & CONSULTING ENGINEERS
SURVEYORS
PROJECT MANAGERS
ENVIRONMENTAL CONSULTANTS
LANDSCAPE ARCHITECTS

THESE PLANS ARE THE PROPERTY OF BOHLER ENGINEERING AND ARE NOT TO BE USED IN WHOLE OR IN PART FOR ANY OTHER PROJECT WITHOUT THE EXPRESS WRITTEN PERMISSION FROM BOHLER ENGINEERING. ONLY APPROVED, SIGNED AND SEALED PLANS ARE TO BE CLASSED AS CONSTRUCTION DOCUMENTS. © 2009 BOHLER ENGINEERING

REVISIONS

REV	DATE	COMMENT	BY
1	07-06-2011	CON-COM SUBMISSION	JAB
2			
3			
4			
5			
6			
7			
8			
9			

DIG SAFE CALL BEFORE YOU DIG

THE FOLLOWING STATES REQUIRE NOTIFICATION BY EXCAVATORS, DESIGNERS, OR ANY PERSON PREPARING TO DISTURB THE EARTH'S SURFACE ANYWHERE IN THE STATE.
(MA, ME, NH, RI, VT 1-888-344-7233)
(CT 1-800-922-4455)
(NY 1-800-962-7962)

NOT APPROVED FOR CONSTRUCTION

PROJECT No.:	W111022
DRAWN BY:	CFD
CHECKED BY:	JAB/SPD
DATE:	05/23/2011
SCALE:	AS NOTED
CAD I.D.:	w111022ss1

PROJECT:

SITE PLAN

FOR

Pulte

THE RESIDENCES AT QUAIL RIDGE

LOCATION OF SITE
354 B GREAT ROAD & SKYLINE DR.
TOWN OF ACTON
MIDDLESEX COUNTY, MA

BOHLER ENGINEERING
352 TURNPIKE ROAD
SOUTHBOROUGH, MA 01772
Phone: (508) 480-9900
Fax: (508) 480-9080
www.BohlerEngineering.com

S.P. DECOURSEY
PROFESSIONAL ENGINEER
MASSACHUSETTS LICENSE No. 38424
NEW HAMPSHIRE LICENSE No. 9308
MAINE LICENSE No. 8408
VERMONT LICENSE No. 7110
CONNECTICUT LICENSE No. 23862
RHODE ISLAND LICENSE No. 7590

SHEET TITLE:

SITE AND UTILITY PLAN "A"

SHEET NUMBER:

5

OF 37

REV 0 - 05/23/2011

N

W E

S

LEGEND

REGULAR UNIT

AFFORDABLE HOUSING

EXISTING BUILDING

N/F TOWN OF CONCORD

WATER MANHOLE

N/F TOWN OF CONCORD WATER WORKS

NAGOG BROOK

N/F MONCRIEFF

N/F PURDOM

N/F CRING

N/F WONN

N/F OFORI

WF N1 START

WF M9 END

WF N2

WF M8

WF M6

WF N3

WF M7

WF M5

WF M2

WF M1 START

WF M3

WF N4

WF M4

WF N29 CONNECT

WF N28

100' BUFFER ZONE

20' WIDE TRAIL EASEMENT

WATER LINE TO BE SLEEVED IN LOCATIONS WHERE 10' HORIZONTAL SEPARATION TO SEWER CANNOT BE ACHIEVED (TYP.)

PROP. RETAINING WALL WITH 4' HIGH FENCE ON TOP (TYP.)

AFFORDABLE UNIT (TYP.)

30' PROPERTY LINE OFFSET/YARD SETBACK

PROP. ELECTRIC, TELEPHONE AND CABLE SERVICES (TYP.)

100' VERNAL POOL BUFFER ZONE

EDGE OF BORDERING VEGETATED WETLANDS

VERNAL POOL

WF N5

WF N27

WF N6

WF N25

WF N7

WF N24

WF N8

WF N23

WF N9

WF N22

WF N10

WF N21

PROP. RETAINING WALL (TYP.)

100' VERNAL POOL BUFFER

WF N11

WF N20

WF N12

WF N19

WF N13

WF N18

WF N14

WF N15

WF N17

PROP. ELECTRIC TELEPHONE AND CABLE SERVICES (TYP.)

BIT. CART PATH

UNIT #84

UNIT #135

UNIT #13

UNIT #85

UNIT #86

UNIT #87

UNIT #88

UNIT #89

UNIT #90

UNIT #91

UNIT #92

UNIT #93

UNIT #94

UNIT #95

UNIT #96

UNIT #97

UNIT #98

UNIT #99

UNIT #100

UNIT #102

UNIT #136

UNIT #137

UNIT #103

UNIT #104

UNIT #105

UNIT #106

UNIT #107

UNIT #108

PROP. 1" WATER SERVICE AND CURB STOP (TYP.)

PROP. LOW PRESSURE SEWER SERVICE WITH CHECK VALVE (TYP.)

PROP. GAS SERVICE (TYP.)

PROP. STOP SIGN AND BAR

PROP. WATER GATES(TYP.)

PROP. GAS GATES(TYP.)

PROP. SLOPED GRANITE CURBING AT ALL ROAD INTERSECTION ROUNDINGS (TYP.)

PROP. GUIDERAIL (TYP.)

PROP. 4' HIGH CHAIN LINK FENCE (TYP.)

PROP. INFILTRATION BASIN #10

PROP. RETAINING WALL WITH 4' HIGH FENCE ON TOP (TYP.)

PROP. RIP-RAP SPILLWAY

PROP. GATE

QUAIL RIDGE DRIVE

PROP. INFILTRATION BASIN #12

CURB STOP (TYP.)

PROP. 8" HIGH CHAIN LINK FENCE (TYP.)

EXIST. 16" WATER LINE

EXIST. CONC. HEADWALL (TO REMAIN)

TRANSITION TO 20' WIDE TO 24' WIDE ROADWAY

LOWER PRESSURE SEWER FORCE MAIN MANHOLE (TYP.) SEE PROFILES

3' WIDE PATH EXTENSION (TYP.)

EXIST. 18" DI FUTURE USE PIPE CAP BOTH ENDS

EXIST. GUIDERAIL TO BE REMOVED AND REPLACED WITH STEEL GUIDERAIL

EXIST. CONC. HEADWALL (TO REMAIN)

EXIST. GUIDERAIL TO BE REMOVED AND REPLACED WITH NEW METAL GUIDERAIL AND 4' HIGH CHAIN LINK FENCE

PROP. RELOCATED GATE

WF I6

WF I5

WF I4

WF I3

WF I2

WF J1

WF J2

WF J3

WF J4

WF J5 END

WF L1

WF L2

WF L3

WF L4

WF L5

WF L6

WF L7

WF L8

WF L9

WF L10

WF L11

WF L12

WF L13

WF L14

WF L15

WF L16

WF L17

WF L18

WF L19

WF L20

WF L21

WF L22 R

WF L23 R

WF L24 R

WF L25 R

WF L26

WF L27

WF L28

WF L29

WF L30

WF L31

WF L32

WF L33

WF L34

EDGE OF BORDERING VEGETATED WETLANDS

FLOOD PLAIN

BROOK BRIDGE

PROP. RETAINING WALL WITH GUIDE RAIL AND 4' HIGH CHAIN LINK FENCE ON TOP. CONTRACTOR TO COORDINATE DESIGN WITH STRUCTURAL ENGINEER

PROP. 4' WIDE BITUMINOUS CONC. SIDEWALK

ELECTRIC, TELEPHONE, CABLE AND GAS SERVICE TO BE COORDINATED BY CONTRACTOR/DEVELOPER WITH THE APPROPRIATE UTILITY COMPANIES

PROP. WATER GATES AND CONNECTION TO EXISTING WATER MAIN WITHIN HAZELNUT STREET. COORDINATE WITH ACTON WATER

PROP. STOP SIGN AND BAR

PROP. SLOPED GRANITE CURBING AT ALL ROAD INTERSECTION ROUNDINGS (TYP.)

60' WIDE TEMPORARY CONSTRUCTION EASEMENT (TYP.)

40' WIDE RIGHT OF WAY AS SHOWN ON PLAN 453 & 454 OF 1909 (SEE DEED BOOK 3457 PAGE 221)

MATCHLINE (SEE SHEET 5)

THIS PLAN TO BE UTILIZED FOR SITE LAYOUT PURPOSES ONLY

THIS PLAN TO BE UTILIZED FOR UTILITIES PURPOSES ONLY

40 20 10 0 40

1"= 40'

P:\111\W111022\DWG\w111022ss1.dwg, 06-Site Plan-B, 4/22/2011 10:17:14 AM, joeloaowens, XeroxS410n.pc3, User934, 0.9999999

BOHLER ENGINEERING

CORPORATE OFFICE:
◆ WARREN, NJ

OFFICES:
◆ SOUTHBOROUGH, MA
◆ BOXFORD, MA
◆ TOWSON, MD
◆ ALBANY, NY
◆ ROCHESTER, NY
◆ ROANOKE/OMAA, NY
◆ CENTER VALLEY, PA
◆ CHALFONT, PA
◆ PHILADELPHIA, PA
◆ STERLING, VA
◆ RICHMOND, VA
◆ FORT LAUDERDALE, FL
◆ TAMPA, FL

CIVIL & CONSULTING ENGINEERS
SURVEYORS
PROJECT MANAGERS
ENVIRONMENTAL CONSULTANTS
LANDSCAPE ARCHITECTS

THESE DRAWINGS ARE THE PROPERTY OF BOHLER ENGINEERING AND ARE NOT TO BE USED IN WHOLE OR IN PART FOR ANY OTHER PROJECT WITHOUT THE EXPRESS WRITTEN CONSENT OF BOHLER ENGINEERING. ONLY APPROVED, SIGNED AND SEALED PLANS SHALL BE UTILIZED FOR CONSTRUCTION PURPOSES. © 2009 BOHLER ENGINEERING

REVISIONS

REV	DATE	COMMENT	BY
1	07-06-2011	CON-COM SUBMISSION	JAB
2			
3			
4			
5			
6			
7			
8			
9			

THE FOLLOWING STATES REQUIRE NOTIFICATION BY EXCAVATORS, DESIGNERS, OR ANY PERSON PREPARING TO DISTURB THE EARTH'S SURFACE ANYWHERE IN THE STATE.
(MA, ME, NH, RI, VT 1-888-344-7233)
(CT 1-800-922-4455)
(NY 1-800-962-7962)

NOT APPROVED FOR CONSTRUCTION

PROJECT No.:	W111022
DRAWN BY:	CFD
CHECKED BY:	JAB/SPD
DATE:	05/23/2011
SCALE:	AS NOTED
CAD I.D.:	w111022ss1

PROJECT:

SITE PLAN

FOR

Pulte HOMES

THE RESIDENCES AT QUAIL RIDGE

LOCATION OF SITE
354 B GREAT ROAD & SKYLINE DR.
TOWN OF ACTON
MIDDLESEX COUNTY, MA

BOHLER ENGINEERING
352 TURNPIKE ROAD
SOUTHBOROUGH, MA 01772
Phone: (508) 480-9900
Fax: (508) 480-9080
www.BohlerEngineering.com

S.P. DECOURSEY

PROFESSIONAL ENGINEER
MASSACHUSETTS LICENSE No. 36424
NEW HAMPSHIRE LICENSE No. 9308
MAINE LICENSE No. 8408
VERMONT LICENSE No. 7110
CONNECTICUT LICENSE No. 23882
RHODE ISLAND LICENSE No. 7990

SHEET TITLE:

SITE AND UTILITY PLAN "B"

SHEET NUMBER:

6

OF 37

REV 0 - 05/23/2011

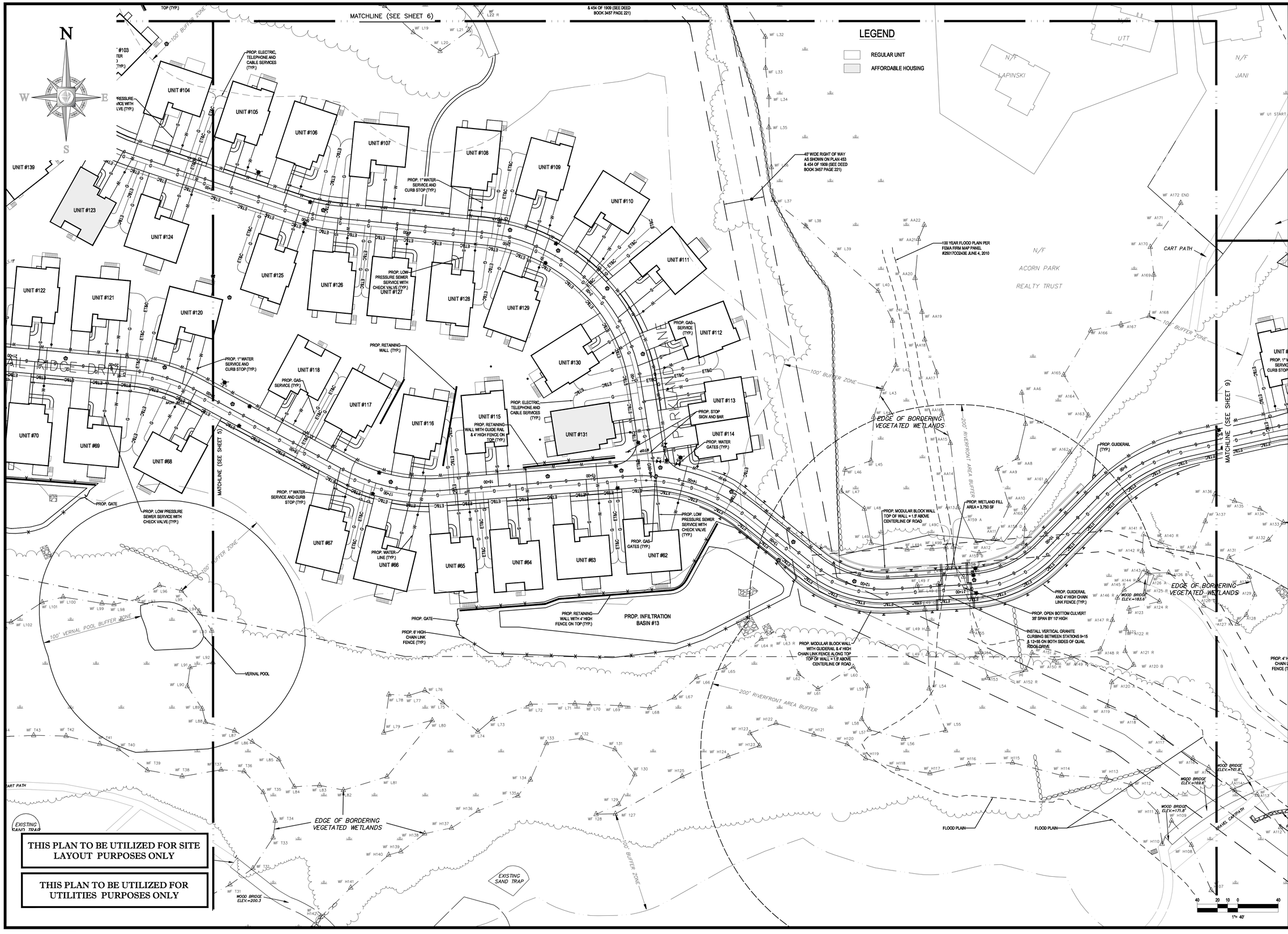

THIS PLAN TO BE UTILIZED FOR SITE LAYOUT PURPOSES ONLY

THIS PLAN TO BE UTILIZED FOR UTILITIES PURPOSES ONLY

BOHLER ENGINEERING

CIVIL & CONSULTING ENGINEERS
SURVEYORS
PROJECT MANAGERS
ENVIRONMENTAL CONSULTANTS
LANDSCAPE ARCHITECTS

CORPORATE OFFICE:
◆ WARREN, NJ

OFFICES:
◆ SOUTHBOROUGH, MA
◆ BOHLER, PA
◆ TOWSON, MD
◆ LAUREL, MD
◆ ROMONOMA, NY
◆ CENTER VALLEY, PA
◆ CHALFONT, PA
◆ PITTSBURGH, PA
◆ STERLING, VA
◆ MANASSAS, VA
◆ FORT LAUDERDALE, FL
◆ TAMPA, FL

THE INFORMATION CONTAINED IN THIS DRAWING COMPRISES THE INSTRUMENTS OF SERVICE FOR THIS PROJECT, AS PREPARED BY BOHLER ENGINEERING. ONLY APPROVED, SIGNED AND SEALED PLANS SHALL BE CONSTRUCTED OR REVISED. ANY UNAUTHORIZED REVISIONS TO OR DISTRIBUTION OF THESE PLANS WITHOUT THE PERMISSION OF BOHLER ENGINEERING WILL BE SUBJECT TO LEGAL ACTION BY BOHLER ENGINEERING. © 2009 BOHLER ENGINEERING

REVISIONS

REV	DATE	COMMENT	BY
1	07-06-2011	CON-COM SUBMISSION	JAB
2			
3			
4			
5			
6			
7			
8			
9			

THE FOLLOWING STATES REQUIRE NOTIFICATION BY EXCAVATORS, DESIGNERS, OR ANY PERSON PREPARING TO DISTURB THE EARTH'S SURFACE ANYWHERE IN THE STATE.
(MA, ME, NH, RI, VT 1-888-344-7233)
(CT 1-800-922-4455)
(NY 1-800-962-7962)

NOT APPROVED FOR CONSTRUCTION

PROJECT No.:	W111022
DRAWN BY:	CFD
CHECKED BY:	JAB/BPD
DATE:	05/23/2011
SCALE:	AS NOTED
CAD I.D.:	w111022ss1

PROJECT:

SITE PLAN

FOR

Pulte HOMES

THE RESIDENCES AT QUAIL RIDGE

LOCATION OF SITE
354 B GREAT ROAD & SKYLINE DR.
TOWN OF ACTON
MIDDLESEX COUNTY, MA

BOHLER ENGINEERING
352 TURNPIKE ROAD
SOUTHBOROUGH, MA 01772
Phone: (508) 480-9900
Fax: (508) 480-9080
www.BohlerEngineering.com

S.P. DECOURSEY

PROFESSIONAL ENGINEER
MASSACHUSETTS LICENSE No. 36424
NEW HAMPSHIRE LICENSE No. 9300
MAINE LICENSE No. 8408
VERMONT LICENSE No. 7110
CONNECTICUT LICENSE No. 23882
RHODE ISLAND LICENSE No. 7990

SHEET TITLE:

SITE AND UTILITY PLAN "C"

SHEET NUMBER:

7

OF 37

REV 0 - 05/23/2011

P:\111W\111022\DWG\w111022ss1.dwg, 07-Site Plan-C, 4/23/2010, 10:17:14 AM, jonbaxendale, XerxesS310-Jon3, User834, 10.999999%

THIS PLAN TO BE UTILIZED FOR SITE LAYOUT PURPOSES ONLY

THIS PLAN TO BE UTILIZED FOR UTILITIES PURPOSES ONLY

P:\11W\111022\DWG\wl1022ss1.dwg, 08-Site Plan D, 4/23/2010, 10:17:14 AM, jsardanowicz, XeroxC6130_pc3, 1:User54, 1:0.99999997

BOHLER ENGINEERING

CORPORATE OFFICE:
◆ WARREN, NJ
OFFICES:
◆ SOUTHBOROUGH, MA
◆ CHALFONT, PA
◆ NEW YORK, NY
◆ PHILADELPHIA, PA
◆ TOWSON, MD
◆ STERLING, VA
◆ ALBANY, NY
◆ WASHINGTON, DC
◆ ROANOKE, VA
◆ FORT LAUDERDALE, FL
◆ CENTER VALLEY, PA
◆ TAMPA, FL

CIVIL & CONSULTING ENGINEERS
SURVEYORS
PROJECT MANAGERS
ENVIRONMENTAL CONSULTANTS
LANDSCAPE ARCHITECTS

THE INFORMATION CONTAINED IN THIS DRAWING IS THE SOLE PROPERTY OF BOHLER ENGINEERING. ANY REPRODUCTION IN PART OR AS A WHOLE WITHOUT THE WRITTEN PERMISSION OF BOHLER ENGINEERING IS PROHIBITED. ANY USE OF THESE PLANS AND SPECIFICATIONS FOR ANY PROJECT OTHER THAN THE PROJECT FOR WHICH THEY WERE PREPARED, ANY ADDITIONS OR ALTERATIONS TO THESE PLANS AND SPECIFICATIONS, OR ANY REUSE OF THESE PLANS AND SPECIFICATIONS WITHOUT WRITTEN VERIFICATION OR ADAPTATION BY BOHLER ENGINEERING FOR THE SPECIFIC PURPOSE INTENDED WILL BE AT THE USER'S SOLE RISK AND WITHOUT LIABILITY OR LEGAL EXPOSURE TO BOHLER ENGINEERING. © 2010 BOHLER ENGINEERING

REVISIONS

REV	DATE	COMMENT	BY
1	07-06-2011	CON-COM SUBMISSION	JAB
2			
3			
4			
5			
6			
7			
8			
9			

THE FOLLOWING STATES REQUIRE NOTIFICATION BY EXCAVATORS, DESIGNERS, OR ANY PERSON PREPARING TO DISTURB THE EARTH'S SURFACE ANYWHERE IN THE STATE.
(MA, ME, NH, RI, VT 1-888-344-7233)
(CT 1-800-922-4455)
(NY 1-800-962-7962)

NOT APPROVED FOR CONSTRUCTION

PROJECT No.:	W111022
DRAWN BY:	CFD
CHECKED BY:	JAB/SPD
DATE:	05/23/2011
SCALE:	AS NOTED
CAD I.D.:	w111022ss1

PROJECT:

SITE PLAN

FOR

Pulte Homes

THE RESIDENCES AT QUAIL RIDGE

LOCATION OF SITE
354 B GREAT ROAD & SKYLINE DR.
TOWN OF ACTON
MIDDLESEX COUNTY, MA

BOHLER ENGINEERING
352 TURNPIKE ROAD
SOUTHBOROUGH, MA 01772
Phone: (508) 480-9900
Fax: (508) 480-9080
www.BohlerEngineering.com

S.P. DECOURSEY
PROFESSIONAL ENGINEER
MASSACHUSETTS LICENSE No. 38424
NEW HAMPSHIRE LICENSE No. 9306
MAINE LICENSE No. 8408
VERMONT LICENSE No. 7110
CONNECTICUT LICENSE No. 23862
RHODE ISLAND LICENSE No. 7990

SHEET TITLE:

SITE AND UTILITY PLAN "D"

SHEET NUMBER:

8
OF 37

REV 0 - 05/23/2011

MATCHLINE (SEE SHEET 8)

MATCHLINE (SEE SHEET 7)

MATCHLINE (SEE SHEET 10)

MATCHLINE (SEE SHEET 10)

LEDGE OUTCROP

100' BUFFER ZONE

QUAIL RIDGE ROAD

UNIT #1 | UNIT #2 | UNIT #3 | UNIT #4 | UNIT #5 | UNIT #6 | UNIT #7 | UNIT #8 | UNIT #9 | UNIT #10 | UNIT #11 | UNIT #12 | UNIT #13 | UNIT #14 | UNIT #15 | UNIT #16 | UNIT #17 | UNIT #18 | UNIT #19 | UNIT #20 | UNIT #21 | UNIT #22 | UNIT #49 | UNIT #56 | UNIT #57 | UNIT #58 | UNIT #59 | UNIT #60 | UNIT #61

PROP. 1" WATER SERVICE AND CURB STOP (TYP.)

PROP. RETAINING WALL WITH 4' HIGH FENCE ON TOP (TYP.)

PROP. SLOPED GRANITE CURBING AT ALL ROAD INTERSECTION ROUNDINGS (TYP.)

PROP. LOW PRESSURE SEWER SERVICE WITH CHECK VALVE (TYP.)

PROP. GAS SERVICE (TYP.)

PROP. ELECTRIC, TELEPHONE AND CABLE SERVICES (TYP.)

PROP. 4' HIGH CHAIN LINK FENCE (TYP.)

PROP. GATE

PROP. SIDEWALK

PROP. STOP SIGN AND BAR

PROP. 5' WIDE SIDEWALK

PROP. WATER GATES(TYP.)

PROP. STOR SIGN AND BAR

PROP. METAL BEAM GUIDE RAIL (TYP.)

PROP. GUIDERAIL (TYP.)

PROP. DETENTION BASIN #5 WITH WATER QUALITY SWALE

PROP. INFILTRATION BASIN #16

PROP. DETENTION BASIN #22

PROPOSED RESTAURANT FF=214.20

PROPOSED MAIL HOUSE

LOT 2
458,900 SF±
10.54 AC.±

COORDINATE FINAL SEWER CONNECTION TO SEPTIC/LEACH AREAS WITH DEVELOPER & DESIGN ENGINEER

WATER LINE TO BE SLEEVED IN LOCATIONS WHERE 10' HORIZONTAL SEPARATION TO SEWER CANNOT BE ACHIEVED (TYP.)

PROPOSED SEWER LINE DESIGN BE OTHERS

EXISTING TEE BOX

EXISTING PUTTING GREEN

EXISTING SAND TRAP

EXISTING BARN

FAMILY CENTER BUILDING #352

POOL

TENNIS C

ELECTRIC GOLF CART STORAGE BUILDING

TEE AREA FOR DRIVING RANGE

PAVEMENT

STRIPED PARKING SPACES (TYPICAL)

HANDICAP PARKING SIGNS

CONCRETE PAD

ELEC. MOUNT PAD

UTILITY BOXES

STONE RET WALL

RIP RAP SWALE

BOULDER

WELL

COMMON LAND OPEN SPACE PARCEL A

BIT. CART PATH

GRAVEL CART PATH

NASHOBA BROOK

EDGE OF BORDERING VEGETATED WETLANDS

ORDERING WETLANDS

MONITOR WELL

UTILITY BOX

WOOD BRIDGE ELEV.=171.6±

THIS PLAN TO BE UTILIZED FOR SITE LAYOUT PURPOSES ONLY

THIS PLAN TO BE UTILIZED FOR UTILITIES PURPOSES ONLY

LEGEND

REGULAR UNIT

AFFORDABLE HOUSING

N

W E

S

1" = 40'

BOHLER ENGINEERING

CORPORATE OFFICE:
- WARREN, NJ

OFFICES:
- SOUTHBOROUGH, MA
- BALTIMORE, MD
- TOWSON, MD
- LAUREL, MD
- ROHNOKOMA, NY
- CENTERVILLE, PA
- CHALFONT, PA
- PHILADELPHIA, PA
- STERLING, VA
- WILLIAMSBURG, VA
- FORT LAUDERDALE, FL
- TAMPA, FL

CIVIL & CONSULTING ENGINEERS
SURVEYORS
PROJECT MANAGERS
ENVIRONMENTAL CONSULTANTS
LANDSCAPE ARCHITECTS

THE INFORMATION CONTAINED IN THIS DRAWING IS THE SOLE PROPERTY OF BOHLER ENGINEERING. ANY REPRODUCTION IN PART OR AS A WHOLE WITHOUT THE WRITTEN PERMISSION OF BOHLER ENGINEERING IS PROHIBITED. ANY USE OF THESE PLANS AND SPECIFICATIONS FOR ANY PROJECT OTHER THAN THE PROJECT FOR WHICH THEY WERE PREPARED, ANY MODIFICATIONS TO THE PLANS AND SPECIFICATIONS, OR ANY REUSE OF THE PLANS AND SPECIFICATIONS WITHOUT THE EXPRESS WRITTEN CONSENT OF BOHLER ENGINEERING SHALL BE UNAUTHORIZED, AT THE USER'S SOLE RISK AND WITHOUT LIABILITY TO BOHLER ENGINEERING. © 2009 BOHLER ENGINEERING

REVISIONS

REV	DATE	COMMENT	BY
1	07-06-2011	CON-COM SUBMISSION	JAB
2			
3			
4			
5			
6			
7			
8			
9			

THE FOLLOWING STATES REQUIRE NOTIFICATION BY EXCAVATORS, DESIGNERS, OR ANY PERSON PREPARING TO DISTURB THE EARTH'S SURFACE ANYWHERE IN THE STATE.
(MA, ME, NH, RI, VT 1-888-344-7233)
(CT 1-800-922-4455)
(NY 1-800-962-7962)

NOT APPROVED FOR CONSTRUCTION

PROJECT No.:	W111022
DRAWN BY:	CFD
CHECKED BY:	JAB/SPD
DATE:	05/23/2011
SCALE:	AS NOTED
CAD I.D.:	w111022ss1

PROJECT:

SITE PLAN

FOR

Pulte Group

THE RESIDENCES AT QUAIL RIDGE

LOCATION OF SITE
354 B GREAT ROAD & SKYLINE DR.
TOWN OF ACTON
MIDDLESEX COUNTY, MA

BOHLER ENGINEERING
352 TURNPIKE ROAD
SOUTHBOROUGH, MA 01772
Phone: (508) 480-9900
Fax: (508) 480-9080
www.BohlerEngineering.com

S.P. DECOURSEY
PROFESSIONAL ENGINEER
MASSACHUSETTS LICENSE No. 36424
NEW HAMPSHIRE LICENSE No. 9308
MAINE LICENSE No. 8408
VERMONT LICENSE No. 7110
CONNECTICUT LICENSE No. 23965
RHODE ISLAND LICENSE No. 7990

SHEET TITLE:

SITE AND UTILITY PLAN "E"

SHEET NUMBER:

9

OF 37

REV 0 - 05/23/2011

P:\111\W111022\DWG\w111022ss1.dwg, 05-Site Plan E, 4/23/2010, 05:17:14 AM, joeSamowitz, Xref-2010b_ctb.ctb3, Used34, 1.0/////////

THIS PLAN TO BE UTILIZED FOR SITE LAYOUT PURPOSES ONLY

THIS PLAN TO BE UTILIZED FOR UTILITIES PURPOSES ONLY

LEGEND

- REGULAR UNIT
- AFFORDABLE HOUSING

N

W E

S

MATCHLINE (SEE SHEET 9)

MATCHLINE (SEE SHEET 9)

N/F CONRAD

N/F SKYLINE REALTY TRUST

N/F BENSON & EVAN REAL ESTATE, LLC

N/F PALMER FAMILY REALTY TRUST

EXISTING DWELLING #354

EXISTING DWELLING #348

EXISTING BUILDING #346

PROP. STOP SIGN AND BAR

PROPOSED 5' WIDE BITUMINOUS CONC. SIDEWALK

REMOVE AND RESET EXISTING SPLIT RAIL FENCE ALONG EXISTING DWELLINGS PROPERTY TO ALLOW FOR NEW SIDEWALK INSTALLATION (TYP.)

PROP. 3' WIDE GREEN STRIP

END OF PROP. METAL BEAM GUIDERAIL

UTILITY BOXES

UTILITY BOX

CONCRETE RETAINING WALL

EDGE OF BORDERING VEGETATED WETLANDS

PROP. 4' WIDE SIDEWALK WITHOUT GRASS STRIP (WAIVER REQUIRED FOR WALK WIDTH AND NO GRASS STRIP)

CONTRACTOR/DEVELOPER SHALL COORDINATE WITH A STRUCTURAL ENGINEER TO EVALUATE INTEGRITY OF THE EXISTING RETAINING WALLS AS IT RELATES TO THE SIDEWALK, GUIDERAIL AND FENCING INSTALLATION SHOWN HERE ON.

PROP. 5' WIDE BITUMINOUS CONC. SIDEWALK, 4' WIDE IN THE VICINITY OF THE EXISTING RETAINING WALLS AND WETLAND CROSSING

EXISTING UTILITIES TO REMAIN

COORDINATE PROP. SITE UTILITY SERVICES WITH APPROPRIATE TOWN DEPARTMENTS OR UTILITY COMPANIES

HYDRANT

EXIST. CENTER LINE OF ROAD

SKY LINE DRIVE (40' WIDE)

PROP. METAL BEAM GUIDERAIL. FACE OF RAIL SET AT BACK OF CURB

PROP. CENTER LINE OF ROAD

ADJUST C.B.'S (OR REPLACE) TO NEW CURB LINE.

CONCRETE RETAINING WALL (TO REMAIN)

EXISTING CONCRETE RETAINING WALL (TO REMAIN)

WETLANDS

EDGE OF BORDERING VEGETATED WETLANDS

PROP. METAL BEAM GUIDERAILS. SET FACE OF RAIL AT BACK OF EDGE OF WALK

100' BUFFER ZONE

PROP. 5' WIDE BITUMINOUS SIDEWALK (TYP.)

START OF SKYLINE DRIVE REALIGNMENT STATION 1+78

EXIST. BITUMINOUS CURB TO BE REMOVED

GREAT ROAD (PUBLIC ~ 1940 STATE HIGHWAY LAYOUT) (A.K.A. ROUTE 2A & ROUTE 119)

VERNAL POOL

ISOLATED WETLANDS

ISOLATED WETLANDS

ROOF OVERHANG

40 20 10 0 40

1"= 40'

BOHLER ENGINEERING

CIVIL & CONSULTING ENGINEERS
SURVEYORS
PROJECT MANAGERS
ENVIRONMENTAL CONSULTANTS
LANDSCAPE ARCHITECTS

CORPORATE OFFICE:
◆ WARREN, NJ

OFFICES:
◆ SOUTHBOROUGH, MA
◆ BOWIE, MD
◆ TOWSON, MD
◆ LAUREL, MD
◆ ROHNOKOMA, NY
◆ CENTER VALLEY, PA
◆ CHALFONT, PA
◆ PHILADELPHIA, PA
◆ STERLING, VA
◆ WILLIAMSTOWN, NJ
◆ FORT LAUDERDALE, FL
◆ TAMPA, FL

THE INFORMATION CONTAINED ON THIS DRAWING IS THE SOLE PROPERTY OF BOHLER ENGINEERING. ANY REPRODUCTION IN PART OR AS A WHOLE WITHOUT THE WRITTEN PERMISSION OF BOHLER ENGINEERING IS PROHIBITED. ONLY APPROVED, SIGNED AND SEALED PLANS SHALL BE CONSTRUCTED/FABRICATED. © 2010 BOHLER ENGINEERING

REVISIONS

REV	DATE	COMMENT	BY
1	07-06-2011	CON-COM SUBMISSION	JAB
2			
3			
4			
5			
6			
7			
8			
9			

DIG SAFE - CALL BEFORE YOU DIG

THE FOLLOWING STATES REQUIRE NOTIFICATION BY EXCAVATORS, DESIGNERS, OR ANY PERSON PREPARING TO DISTURB THE EARTH'S SURFACE ANYWHERE IN THE STATE.
(MA, ME, NH, RI, VT 1-888-344-7233)
(CT 1-800-922-4455)
(NY 1-800-962-7962)

NOT APPROVED FOR CONSTRUCTION

PROJECT No.:	W111022
DRAWN BY:	CFD
CHECKED BY:	JAB/SPD
DATE:	05/23/2011
SCALE:	AS NOTED
CAD I.D.:	w111022ss1

PROJECT:

SITE PLAN

FOR

Pulte HOMES

THE RESIDENCES AT QUAIL RIDGE

LOCATION OF SITE
354 B GREAT ROAD & SKYLINE DR.
TOWN OF ACTON
MIDDLESEX COUNTY, MA

BOHLER ENGINEERING
352 TURNPIKE ROAD
SOUTHBOROUGH, MA 01772
Phone: (508) 480-9900
Fax: (508) 480-9080
www.BohlerEngineering.com

S.P. DECOURSEY
PROFESSIONAL ENGINEER
MASSACHUSETTS LICENSE No. 36424
NEW HAMPSHIRE LICENSE No. 9308
MAINE LICENSE No. 8408
VERMONT LICENSE No. 7110
CONNECTICUT LICENSE No. 23862
RHODE ISLAND LICENSE No. 7960

SHEET TITLE:

SITE AND UTILITY PLAN "F"

SHEET NUMBER:

10

OF 37

REV 0 - 05/23/2011

P:\111W\111022\DWG\w111022ss1.dwg, 10-Site Plan F, 4/23/2010, 1:07:17 AM, jsarkisian/cs, Xerox5334-1.pc3, User:SH, 1.0:9999999

N

W E

S

MATCHLINE (SEE SHEET 12)

MATCHLINE (SEE SHEET 13)

EDGE OF BORDERING VEGETATED WETLANDS

EDGE OF BORDERING VEGETATED WETLANDS

EDGE OF BORDERING VEGETATED WETLANDS

EDGE OF BORDERING VEGETATED WETLANDS

100' BUFFER ZONE

100' BUFFER ZONE

100' BUFFER ZONE

100' VERNAL POOL BUFFER ZONE

PARKLAND LANE

QUAIL RIDGE DRIVE

12" DRAIN

4" DRAIN

4" DRAIN

12" DRAIN

ADLER UNIT #98 TC=240.15 CF=232.65 BF=231.48 WALKOUT

LAUREL UNIT #97 TC=233.65 CF=225.15 BF=224.98 WALKOUT

CORTLAND UNIT #00 TC=240.15 CF=232.65 BF=231.48 WALKOUT

BALDWIN UNIT #99 TC=240.65 CF=232.65 BF=231.48 WALKOUT

INSTALL 1-8.5' LONG CULTEC MODEL 150HD UNIT & CONNECT TO ROOF LEADERS (TYP.) SEE DETAIL

43 LF OF 6" HDPE S=0.047

PROP. RIP-RAP APRON

6" HDPE F.E.S. INV.=222.0

PROP. INFILTRATION BASIN #10

6" HDPE INV.=224.0

PROP. EMERGENCY SPILLWAY ELEV.=225.0

TOP OF DIKE ELEV.=226.0

PROP. RIP-RAP PAD

12" HDPE F.E.S. INV.=224.00

BOTTOM LEVEL OF INFILTRATION BASIN TO BE TREATED WITH A MIMIMUM 4" OF 3/4" CRUSHED STONE

MILTON UNIT #84 TC=244.65 CF=236.65 BF=235.98

MILTON UNIT #85 TC=244.65 CF=236.65 BF=235.98

MILTON UNIT #86 TC=244.65 CF=236.65 BF=235.98

MILTON UNIT #87 TC=244.65 CF=236.65 BF=235.98

MILTON UNIT #88 TC=244.65 CF=236.65 BF=235.98

LAUREL UNIT #136 TC=244.15 CF=236.15 BF=235.98

ENTERTAINMENT UNIT #137 TC=244.15 CF=236.15 BF=235.98

LAUREL UNIT #106 TC=244.65 CF=236.65 BF=235.98 WALKOUT

REDBRIDGE UNIT #105 TC=244.65 CF=236.65 BF=235.98 WALKOUT

INSTALL 2-8.5' LONG CULTEC MODEL 150HD UNITS & CONNECT TO ROOF LEADERS (TYP.) SEE DETAIL

ENTERTAINMENT UNIT #104 TC=243.65 CF=235.65 BF=234.98 WALKOUT

LAUREL UNIT #105 TC=243.65 CF=235.65 BF=234.98 WALKOUT

REDBRIDGE UNIT #103 TC=234.65 CF=226.65 BF=225.48 WALKOUT

CORTLAND UNIT #135 TC=243.65 CF=235.65 BF=234.98 WALKOUT

BALDWIN UNIT #13 TC=243.65 CF=235.65 BF=234.98 WALKOUT

LAUREL UNIT #88 TC=234.15 CF=226.15 BF=225.98

MILTON UNIT #82 TC=243.65 CF=235.65 BF=234.98

MILTON UNIT #81 TC=243.65 CF=235.65 BF=234.98

PROPOSED ROOF LEADER STORMWATER CONNECTION (TYP.)

INSTALL 2-8.5' LONG CULTEC MODEL 150HD UNITS & CONNECT TO ROOF LEADERS (TYP.) SEE DETAIL.

CB RIM=238.5 INV=235.5

BALDWIN UNIT #133 TC=240.15 CF=232.65 BF=231.48 WALKOUT

CORTLAND UNIT #132 TC=240.15 CF=232.65 BF=231.48 WALKOUT

REDBRIDGE UNIT #139 TC=235.65 CF=227.65 BF=226.98

ADLER UNIT #123 TC=234.65 CF=226.65 BF=225.98

ENTERTAINMENT UNIT #124 TC=233.15 CF=225.15 BF=224.98

88 LF OF 12" HDPE S=0.020

30 LF OF 15" HDPE S=0.017

18" HDPE F.E.S. INV.=232.00

PROP. RIP-RAP PAD

PROP. INFILTRATION BASIN #9

6" HDPE INV.=233.0

TOP OF DIKE ELEV.=235.0

BOTTOM LEVEL OF INFILTRATION BASIN TO BE TREATED WITH A MINIMUM 4" OF 3/4" CRUSHED STONE

MILTON UNIT #80 TC=239.65 CF=231.65 BF=230.98

MORGAN UNIT #76 TC=237.15 CF=229.15 BF=228.98

MORGAN UNIT #75 TC=237.65 CF=229.65 BF=228.98 WALKOUT

MILTON UNIT #74 TC=237.65 CF=229.65 BF=228.98 WALKOUT

PROP. EMERGENCY SPILLWAY ELEV.=234.0

PROP. RIP-RAP APRON

6" HDPE F.E.S. INV.=229.0

31 LF OF 6" HDPE; S=0.129

REDBRIDGE UNIT #141 TC=236.65 CF=228.65 BF=227.98

REDBRIDGE UNIT #140 TC=235.65 CF=227.65 BF=226.98

LAUREL UNIT #122 TC=232.65 CF=225.15 BF=223.98

ENTERTAINMENT UNIT #121 TC=233.65 CF=223.65 BF=222.98

ENTERTAINMENT UNIT #120 TC=229.65 CF=221.15 BF=219.98

LAUREL UNIT #125 TC=233.15 CF=225.15 BF=224.98

LAUREL UNIT #73 TC=234.65 CF=226.15 BF=225.98 WALKOUT

REDBRIDGE UNIT #72 TC=233.65 CF=226.15 BF=226.98 WALKOUT

LAUREL UNIT #71 TC=234.15 CF=226.65 BF=225.48 WALKOUT

REDBRIDGE UNIT #70 TC=232.15 CF=224.65 BF=223.48 WALKOUT

ENTERTAINMENT UNIT #69 TC=230.65 CF=223.15 BF=221.98 WALKOUT

ENTERTAINMENT UNIT #68 TC=228.15 CF=220.65 BF=219.48 WALKOUT

PROP. INFILTRATION BASIN #31

6" HDPE INV.=218.0

INSTALL 1-8.5' LONG CULTEC MODEL 150HD UNIT & CONNECT TO ROOF LEADERS (TYP.) SEE DETAIL

PROP. RIP-RAP APRON

18" HDPE F.E.S. INV.=217.70

25 LF OF 6" HDPE; S=0.06

6" HDPE F.E.S. INV.=216.0

BOTTOM LEVEL OF INFILTRATION BASIN TO BE TREATED WITH A MINIMUM 4" OF 3/4" CRUSHED STONE

PROP. EMERGENCY SPILLWAY ELEV.=220.0

PROP. RIP-RAP APRON

6" SDR INV.=224.91

6" SDR INV.=224.20

N/F TOWN OF

THIS PLAN TO BE UTILIZED FOR SITE GRADING PURPOSES ONLY

40 20 10 0 40

1"= 40'

BOHLER ENGINEERING

CIVIL & CONSULTING ENGINEERS
SURVEYORS
PROJECT MANAGERS
ENVIRONMENTAL CONSULTANTS
LANDSCAPE ARCHITECTS

CORPORATE OFFICE:
◆ WARREN, NJ

OFFICES:
◆ SOUTHBOROUGH, MA
◆ CHALFONT, PA
◆ NEW BRUNSWICK, NJ
◆ PITTSBURGH, PA
◆ TOWSON, MD
◆ STERLING, VA
◆ HUNTINGTON, NY
◆ WILMINGTON, NC
◆ ROMULUS, NY
◆ ROCHESTER, NY
◆ CENTER VALLEY, PA
◆ FORT LAUDERDALE, FL
◆ TAMPA, FL

THESE PLANS ARE COPYRIGHTED BY BOHLER ENGINEERING AND ARE NOT TO BE USED IN WHOLE OR IN PART FOR ANY PROJECT OTHER THAN THE ONE FOR WHICH THEY WERE PREPARED. ANY UNAUTHORIZED USE, REUSE OR REDRAWING OF THESE PLANS WITHOUT THE WRITTEN CONSENT OF BOHLER ENGINEERING WILL BE SUBJECT TO LEGAL ACTION BY BOHLER ENGINEERING. © 2011 BOHLER ENGINEERING

REVISIONS

REV	DATE	COMMENT	BY
1	07-06-2011	CON-COM SUBMISSION	JAB
2			
3			
4			
5			
6			
7			
8			
9			

DIG SAFE CALL BEFORE YOU DIG

THE FOLLOWING STATES REQUIRE NOTIFICATION BY EXCAVATORS, DESIGNERS, OR ANY PERSON PREPARING TO DISTURB THE EARTHS SURFACE ANYWHERE IN THE STATE.
(MA, ME, NH, RI, VT 1-888-344-7233)
(CT 1-800-922-4455)
(NY 1-800-962-7962)

NOT APPROVED FOR CONSTRUCTION

PROJECT No.:	W111022
DRAWN BY:	CFD
CHECKED BY:	JAB/SPD
DATE:	05/23/2011
SCALE:	AS NOTED
CAD I.D.:	w111022ss1

PROJECT:

SITE PLAN

FOR

Pulte HOMES

THE RESIDENCES AT QUAIL RIDGE

LOCATION OF SITE
354 B GREAT ROAD & SKYLINE DR.
TOWN OF ACTON
MIDDLESEX COUNTY, MA

BOHLER ENGINEERING
352 TURNPIKE ROAD
SOUTHBOROUGH, MA 01772
Phone: (508) 480-9900
Fax: (508) 480-9080
www.BohlerEngineering.com

S.P. DECOURSEY
PROFESSIONAL ENGINEER
MASSACHUSETTS LICENSE No. 36424
NEW HAMPSHIRE LICENSE No. 9308
MAINE LICENSE No. 8408
VERMONT LICENSE No. 7110
CONNECTICUT LICENSE No. 23662
RHODE ISLAND LICENSE No. 7990

SHEET TITLE:

GRADING AND DRAINAGE PLAN "A"

SHEET NUMBER:

11
OF 37

REV 0 - 05/23/2011

P:\111W\111022\DWG\sw\1022sst.dwg, 11-Grading Plan A, 4/22/2010, 10:7:14 AM, jsrdanowicz, Xerox5135-1.pc3, User5/4, 1.9999999%

N

W E

S

EXISTING BUILDING

N/F
TOWN OF CONCORD

N/F
TOWN OF CONCORD
WATER WORKS

NAGOG BROOK

N/F
MONCRIEFT

N/F
PURDOM

N/F
CRING

N/F
WONN

N/F
OFORI

EDGE OF BORDERING VEGETATED WETLANDS

100' BUFFER ZONE

100' VERNAL POOL/BUFFER ZONE

INSTALL 2-8.5' LONG CULTEC MODEL 150HD UNITS & CONNECT TO ROOF LEADERS (TYP.) SEE DETAIL

PROPOSED ROOF LEADER STORMWATER CONNECTION (TYP.)

TOP OF DIKE ELEV.=228.2

BOTTOM LEVEL OF INFILTRATION BASIN TO BE TREATED WITH A MINIMUM 4" OF 3/4" CRUSHED STONE

PROP. EMERGENCY SPILLWAY ELEV.=225.2

PROP. INFILTRATION BASIN #12

PROP. RIP-RAP APRON

OUTLET CONTROL STRUCTURE #12 (SEE DETAIL)

60 LF OF 18" HDPE; S=0.02

QUAIL RIDGE DRIVE

50 LF OF 15" HDPE; S=0.01

12" HDPE F.E.S. INV.=221.50

38 LF OF 18" HDPE; S=0.01

18" HDPE F.E.S. INV.=212.72

PROP. RIP-RAP APRON

INSTALL 1-8.5' LONG CULTEC MODEL 150HD UNIT & CONNECT TO ROOF LEADERS (TYP.) SEE DETAIL

43 LF OF 6" HDPE; S=0.047

6" HDPE INV.=224.0

PROP. INFILTRATION BASIN #10

6" HDPE F.E.S. INV.=227.0

TOP OF DIKE ELEV.=228.0

PROP. EMERGENCY SPILLWAY ELEV.=225.0

PROP. RIP-RAP PAD

12" HDPE F.E.S. INV.=224.00

BOTTOM LEVEL OF INFILTRATION BASIN TO BE TREATED WITH A MINIMUM 4" OF 3/4" CRUSHED STONE

PARKLAND LANE

MATCHLINE (SEE SHEET 11)

INSTALL 2-8.5' LONG CULTEC MODEL 150HD UNITS & CONNECT TO ROOF LEADERS (TYP.) SEE DETAIL

INSTALL 1-8.5' LONG CULTEC MODEL 150HD UNIT & CONNECT TO ROOF LEADERS (TYP.) SEE DETAIL

BALDWIN UNIT #93 TC=232.65 CF=230.15 BF=228.98

CORTLAND UNIT #94 TC=237.65 CF=230.15 BF=228.98 WALK-OUT

MILTON UNIT #95 TC=231.15 CF=223.65 BF=222.48

MORGAN UNIT #96 TC=231.15 CF=223.65 BF=222.48

ADLER UNIT #98 TC=240.15 CF=232.65 BF=231.48 WALKOUT

LAUREL UNIT #97 TC=233.29 CF=225.75 BF=224.58 WALKOUT

CORTLAND UNIT #100 TC=243.15 CF=235.65 BF=234.48 WALKOUT

BALDWIN UNIT #99 TC=240.15 CF=232.65 BF=231.48 WALKOUT

MILTON UNIT #91 TC=244.39 CF=236.89 BF=235.63

MILTON UNIT #92 TC=244.39 CF=236.89 BF=235.63

MORGAN UNIT #90 TC=244.39 CF=236.89 BF=235.63

BALDWIN UNIT #89 TC=240.65 CF=233.15 BF=231.98

CORTLAND UNIT #88 TC=240.65 CF=233.15 BF=231.98

MILTON UNIT #87 TC=240.65 CF=233.15 BF=231.98

MILTON UNIT #86 TC=240.65 CF=233.15 BF=231.98

MILTON UNIT #85 TC=240.65 CF=233.15 BF=231.98

MILTON UNIT #84 TC=240.65 CF=233.15 BF=231.98

CORTLAND UNIT #135 TC=243.41 CF=235.91 BF=234.73 WALKOUT

BALDWIN UNIT #13 TC=243.9 CF=236.4 BF=235.23 WALKOUT

LAUREL UNIT #136 TC=243.15 CF=235.65 BF=234.48 WALKOUT

ENTERTAINMENT UNIT #137 TC=243.15 CF=235.65 BF=234.48

LAUREL UNIT #138 TC=238.15 CF=230.65 BF=229.48

REDBRIDGE UNIT #102 TC=243.9 CF=236.4 BF=235.23 WALKOUT

ENTERTAINMENT UNIT #104 TC=233.65 CF=226.15 BF=224.99 WALKOUT

LAUREL UNIT #105 TC=229.65 CF=222.15 BF=220.99 WALKOUT

REDBRIDGE UNIT #106 TC=231.65 CF=224.15 BF=222.98 WALKOUT

ENTERTAINMENT UNIT #107 TC=229.15 CF=221.65 BF=220.48 WALKOUT

REDBRIDGE UNIT #108 TC=221.15 CF=213.65 BF=212.48 WALKOUT

LAUREL UNIT #109 TC=216.15 CF=208.65 BF=207.48 WALKOUT

EDGE OF BORDERING VEGETATED WETLANDS

EDGE OF BORDERING VEGETATED WETLANDS

EDGE OF BORDERING VEGETATED WETLANDS

THIS PLAN TO BE UTILIZED FOR SITE GRADING PURPOSES ONLY

40 20 10 0 40
1"= 40'

P:\111\W111022\DWG\w111022as1.dwg, L2-Grading Plan 8x, 4/13/2010, 10:71:14 AM, jsardanowicz, Xerox5135.pc3, 1.User54, 1:0.9999999

BOHLER ENGINEERING

CORPORATE OFFICE:
◆ WARREN, NJ

OFFICES:
◆ SOUTHBOROUGH, MA
◆ BOONTON, NJ
◆ TOWSON, MD
◆ LANCASTER, PA
◆ ROANOKE, VA
◆ ROMONCOMA, NY
◆ CENTER VALLEY, PA
◆ CHALFONT, PA
◆ ALLENTOWN, PA
◆ STERLING, VA
◆ HAGERSTOWN, MD
◆ FORT LAUDERDALE, FL
◆ TAMPA, FL

CIVIL & CONSULTING ENGINEERS
SURVEYORS
PROJECT MANAGERS
ENVIRONMENTAL CONSULTANTS
LANDSCAPE ARCHITECTS

THE BOHLER ENGINEERING NETWORK CONSISTS OF BOHLER ENGINEERING NEW ENGLAND, LLC; BOHLER ENGINEERING MID-ATLANTIC, LLC; BOHLER ENGINEERING SOUTHEAST, LLC; BOHLER ENGINEERING PENNSYLVANIA, LLC; BOHLER ENGINEERING NEW YORK, LLC; BOHLER ENGINEERING MICHIGAN, LLC; BOHLER ENGINEERING VIRGINIA, LLC; BOHLER ENGINEERING FLORIDA, LLC; BOHLER ENGINEERING OHIO, LLC; BOHLER ENGINEERING NORTH CAROLINA, LLC; BOHLER ENGINEERING WISCONSIN, LLC; BOHLER ENGINEERING COLORADO, LLC; BOHLER ENGINEERING TEXAS, LLC; BOHLER ENGINEERING CALIFORNIA, LLC; BOHLER ENGINEERING ILLINOIS, LLC; BOHLER ENGINEERING GEORGIA, LLC; BOHLER ENGINEERING ARIZONA, LLC; BOHLER ENGINEERING NEVADA, LLC; BOHLER ENGINEERING OREGON, LLC; BOHLER ENGINEERING WASHINGTON, LLC; BOHLER ENGINEERING SOUTH CAROLINA, LLC; BOHLER ENGINEERING TENNESSEE, LLC; BOHLER ENGINEERING MINNESOTA, LLC; BOHLER ENGINEERING INDIANA, LLC; BOHLER ENGINEERING KANSAS, LLC; BOHLER ENGINEERING MISSOURI, LLC; BOHLER ENGINEERING UTAH, LLC; BOHLER ENGINEERING ALABAMA, LLC; BOHLER ENGINEERING LOUISIANA, LLC; BOHLER ENGINEERING KENTUCKY, LLC; BOHLER ENGINEERING OKLAHOMA, LLC; BOHLER ENGINEERING NEBRASKA, LLC; BOHLER ENGINEERING IOWA, LLC; BOHLER ENGINEERING DELAWARE, LLC; BOHLER ENGINEERING CONNECTICUT, LLC; BOHLER ENGINEERING MAINE, LLC; BOHLER ENGINEERING NEW HAMPSHIRE, LLC; BOHLER ENGINEERING RHODE ISLAND, LLC; BOHLER ENGINEERING VERMONT, LLC; BOHLER ENGINEERING WEST VIRGINIA, LLC; BOHLER ENGINEERING DISTRICT OF COLUMBIA, LLC; BOHLER ENGINEERING NEW MEXICO, LLC; BOHLER ENGINEERING WYOMING, LLC; BOHLER ENGINEERING IDAHO, LLC; BOHLER ENGINEERING MONTANA, LLC; BOHLER ENGINEERING NORTH DAKOTA, LLC; BOHLER ENGINEERING SOUTH DAKOTA, LLC; BOHLER ENGINEERING ALASKA, LLC; BOHLER ENGINEERING HAWAII, LLC; BOHLER ENGINEERING PUERTO RICO, LLC; BOHLER ENGINEERING CAYMAN ISLANDS, LTD; BOHLER ENGINEERING BAHAMAS, LTD; BOHLER ENGINEERING BARBADOS, INC; BOHLER ENGINEERING TURKS AND CAICOS, LTD; BOHLER ENGINEERING BRITISH VIRGIN ISLANDS, LTD; BOHLER ENGINEERING ANTIGUA, INC; BOHLER ENGINEERING ST. LUCIA LTD; BOHLER ENGINEERING ST. KITTS AND NEVIS, LTD; BOHLER ENGINEERING CONSTRUCTION MANAGEMENT, LLC; BOHLER ENGINEERING

REVISIONS

REV	DATE	COMMENT	BY
1	07-06-2011	CON-COM SUBMISSION	JAB
2			
3			
4			
5			
6			
7			
8			
9			

CALL BEFORE YOU DIG

THE FOLLOWING STATES REQUIRE NOTIFICATION BY EXCAVATORS, DESIGNERS, OR ANY PERSON PREPARING TO DISTURB THE EARTH'S SURFACE ANYWHERE IN THE STATE.
(MA, ME, NH, RI, VT 1-888-344-7233)
(CT 1-800-922-4455)
(NY 1-800-962-7962)

NOT APPROVED FOR CONSTRUCTION

PROJECT No.:	W111022
DRAWN BY:	CFD
CHECKED BY:	JAB/SPD
DATE:	05/23/2011
SCALE:	AS NOTED
CAD I.D.:	w111022as1

PROJECT:

SITE PLAN

FOR

Pulte HOMES

THE RESIDENCES AT QUAIL RIDGE

LOCATION OF SITE
354 B GREAT ROAD & SKYLINE DR.
TOWN OF ACTON
MIDDLESEX COUNTY, MA

BOHLER ENGINEERING
352 TURNPIKE ROAD
SOUTHBOROUGH, MA 01772
Phone: (508) 480-0900
Fax: (508) 480-9080
www.BohlerEngineering.com

S.P. DECOURSEY

PROFESSIONAL ENGINEER
MASSACHUSETTS LICENSE No. 36424
NEW HAMPSHIRE LICENSE No. 9308
MAINE LICENSE No. 8408
VERMONT LICENSE No. 7110
CONNECTICUT LICENSE No. 23802
RHODE ISLAND LICENSE No. 7990

SHEET TITLE:

GRADING AND DRAINAGE PLAN "B"

SHEET NUMBER:

12
OF 37

REV 0 - 05/23/2011

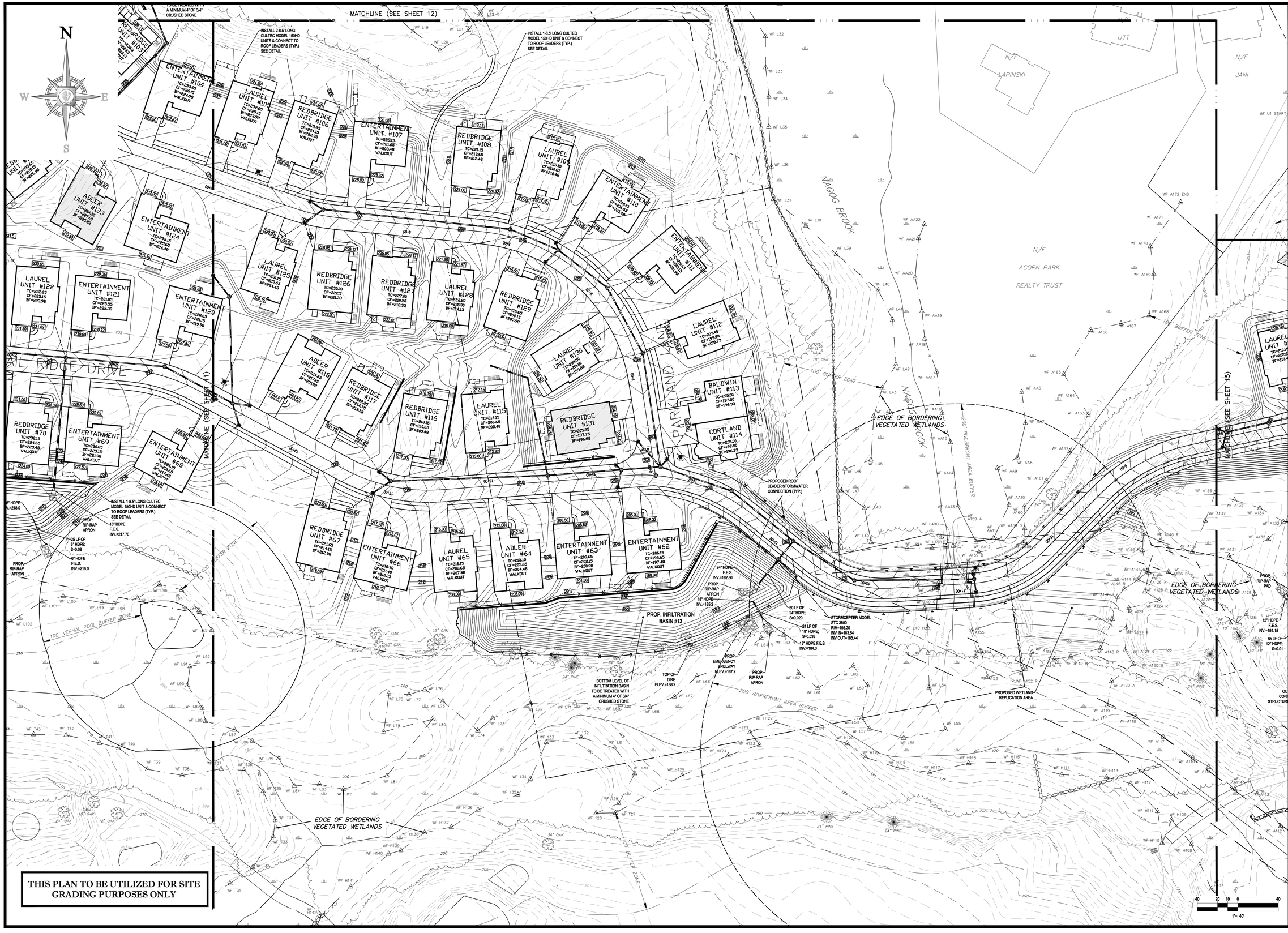

THIS PLAN TO BE UTILIZED FOR SITE GRADING PURPOSES ONLY

P:\11\W111002\DWG\sd111022sd.dwg, 13-Grading Plan C, 4/23/2011 5:18:17 AM, joeSansone, XrefsOff

BOHLER ENGINEERING

CIVIL & CONSULTING ENGINEERS
SURVEYORS
PROJECT MANAGERS
ENVIRONMENTAL CONSULTANTS
LANDSCAPE ARCHITECTS

CORPORATE OFFICE:
◆ WARREN, NJ
OFFICES:
◆ SOUTHBOROUGH, MA
◆ BOSTON, MA
◆ TOWSON, MD
◆ MANCHESTER, NH
◆ ROANOKE/OMAA, NY
◆ CENTERVALLEY, PA
◆ CHALFONT, PA
◆ PITTSBURGH, PA
◆ STERLING, VA
◆ WILLIAMSBURG, VA
◆ FORT LAUDERDALE, FL
◆ TAMPA, FL

THESE PLANS ARE COPYRIGHTED AND ARE THE PROPERTY OF BOHLER ENGINEERING. THEY ARE NOT TO BE USED IN WHOLE OR IN PART FOR ANY PROJECT OTHER THAN THE ONE FOR WHICH THEY WERE PREPARED AND PURCHASED FROM BOHLER ENGINEERING. ONLY APPROVED, SIGNED AND SEALED PLANS SHALL BE CONSTRUCTED OR REPRODUCED. © 2009 BOHLER ENGINEERING

REVISIONS

REV	DATE	COMMENT	BY
1	07-06-2011	CON-COM SUBMISSION	JAB
2			
3			
4			
5			
6			
7			
8			
9			

THE FOLLOWING STATES REQUIRE NOTIFICATION BY EXCAVATORS, DESIGNERS, OR ANY PERSON PREPARING TO DISTURB THE EARTHS SURFACE ANYWHERE IN THE STATE.
(MA, ME, NH, RI, VT 1-888-344-7233)
(CT 1-800-922-4455)
(NY 1-800-962-7962)

NOT APPROVED FOR CONSTRUCTION

PROJECT No.:	W111022
DRAWN BY:	CFD
CHECKED BY:	JAB/SPD
DATE:	05/23/2011
SCALE:	AS NOTED
CAD I.D.:	w111022ss1

PROJECT:

SITE PLAN

FOR

Pulte

THE RESIDENCES AT QUAIL RIDGE

LOCATION OF SITE
354 B GREAT ROAD & SKYLINE DR.
TOWN OF ACTON
MIDDLESEX COUNTY, MA

BOHLER ENGINEERING
352 TURNPIKE ROAD
SOUTHBOROUGH, MA 01772
Phone: (508) 480-9900
Fax: (508) 480-9080
www.BohlerEngineering.com

S.P. DECOURSEY
PROFFSSIONAL ENGINEER
MASSACHUSETTS LICENSE No. 36424
NEW HAMPSHIRE LICENSE No. 9308
MAINE LICENSE No. 8408
VERMONT LICENSE No. 7110
CONNECTICUT LICENSE No. 23982
RHODE ISLAND LICENSE No. 7990

SHEET TITLE:

GRADING AND DRAINAGE PLAN "C"

SHEET NUMBER:
13
OF 37

REV 0 - 05/23/2011

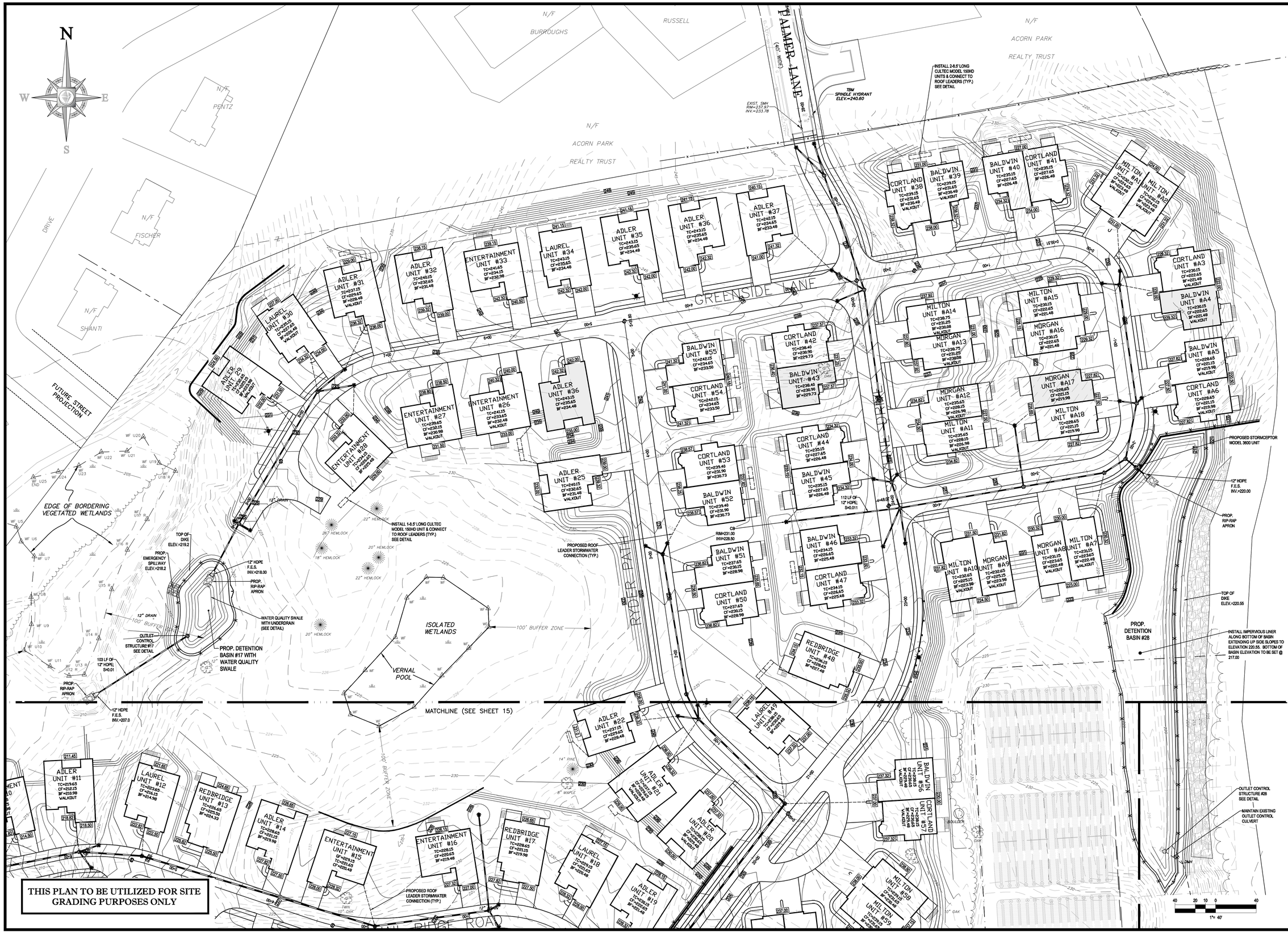

BOHLER ENGINEERING

CORPORATE OFFICE:
◆ WARREN, NJ

OFFICES:
◆ SOUTHBOROUGH, MA
◆ CHALFONT, PA
◆ NEW YORK, NY
◆ TOWSON, MD
◆ STERLING, VA
◆ ALMONDSBURY, UK
◆ WASHINGTON, DC
◆ ROMONCOMA, NY
◆ FORT LAUDERDALE, FL
◆ CENTER VALLEY, PA
◆ TAMPA, FL

CIVIL & CONSULTING ENGINEERS
SURVEYORS
PROJECT MANAGERS
ENVIRONMENTAL CONSULTANTS
LANDSCAPE ARCHITECTS

THESE PLANS ARE COPYRIGHTED BY BOHLER ENGINEERING AND ARE NOT TO BE REPRODUCED, CHANGED OR COPIED IN ANY FORM OR MANNER WHATSOEVER, NOR ARE THEY TO BE ASSIGNED TO ANY THIRD PARTY, WITHOUT FIRST OBTAINING THE EXPRESS WRITTEN PERMISSION AND CONSENT OF BOHLER ENGINEERING. IN THE EVENT OF UNAUTHORIZED REUSE OF THESE PLANS BY ANY THIRD PARTY, THAT PARTY SHALL BE LIABLE FOR ANY LOSSES OR DAMAGES INCURRED AS A RESULT THEREOF.

REVISIONS

REV	DATE	COMMENT	BY
1	07-06-2011	CON-COM SUBMISSION	JAB
2			
3			
4			
5			
6			
7			
8			
9			

THE FOLLOWING STATES REQUIRE NOTIFICATION BY EXCAVATORS, DESIGNERS, OR ANY PERSON PREPARING TO DISTURB THE EARTH'S SURFACE ANYWHERE IN THE STATE.
(MA, ME, NH, RI, VT 1-888-344-7233)
(CT 1-800-922-4455)
(NY 1-800-962-7962)

NOT APPROVED FOR CONSTRUCTION

PROJECT No.:	W111022
DRAWN BY:	CFD
CHECKED BY:	JAB/SPD
DATE:	05/23/2011
SCALE:	AS NOTED
CAD I.D.:	w111022ss1

PROJECT:

SITE PLAN

FOR

Pulte HOMES

THE RESIDENCES AT QUAIL RIDGE

LOCATION OF SITE
354 B GREAT ROAD & SKYLINE DR.
TOWN OF ACTON
MIDDLESEX COUNTY, MA

BOHLER ENGINEERING
352 TURNPIKE ROAD
SOUTHBOROUGH, MA 01772
Phone: (508) 480-9900
Fax: (508) 480-9080
www.BohlerEngineering.com

S.P. DECOURSEY
PROFESSIONAL ENGINEER
MASSACHUSETTS LICENSE No. 36424
NEW HAMPSHIRE LICENSE No. 9308
MAINE LICENSE No. 8408
VERMONT LICENSE No. 7110
CONNECTICUT LICENSE No. 23682
RHODE ISLAND LICENSE No. 7990

SHEET TITLE:

GRADING AND DRAINAGE PLAN "D"

SHEET NUMBER:

14
OF 37

REV 0 - 05/23/2011

P:\111\W111022\DWG\w111022ss1.dwg, 14-Grading Plan D, 4/22/2010, 10:21:14 AM, jsantoscoy, Xerox5315-1.pc3, User=SM, (-0.99999999)

MATCHLINE (SEE SHEET 14)

MATCHLINE (SEE SHEET 13)

MATCHLINE (SEE SHEET 16)

QUAIL RIDGE ROAD

LAUREL UNIT #9 TC=211.15 CF=220.65 BF=201.48

ENTERTAINMENT UNIT #10 TC=215.65 CF=206.15 BF=204.98 WALKOUT

ADLER UNIT #11 TC=219.65 CF=218.15 BF=210.98 WALKOUT

LAUREL UNIT #12 TC=223.65 CF=214.15 BF=214.98

REDBRIDGE UNIT #13 TC=226.65 CF=224.15 BF=224.35

ADLER UNIT #14 TC=228.65 CF=221.15 BF=219.98

ENTERTAINMENT UNIT #15 TC=231.15 CF=225.65 BF=220.48

ENTERTAINMENT UNIT #16 TC=229.15 CF=220.65 BF=219.48

REDBRIDGE UNIT #17 TC=228.65 CF=221.15 BF=219.98

LAUREL UNIT #18 TC=230.65 CF=224.15 BF=224.48

ADLER UNIT #19 TC=228.65 CF=221.15 BF=221.48

ADLER UNIT #20 TC=228.65 CF=221.15 BF=219.98 WALKOUT

ADLER UNIT #21 TC=227.15 CF=220.65 BF=219.48 WALKOUT

ADLER UNIT #22 TC=237.15 CF=230.65 BF=229.48

LAUREL UNIT #19 TC=238.15 CF=230.65 BF=229.48

BALDWIN UNIT #56 TC=238.15 CF=230.65 BF=229.48 WALKOUT

CRETLAND UNIT #57 TC=238.15 CF=230.65 BF=229.48 WALKOUT

MILTON UNIT #59 TC=238.15 CF=230.65 BF=229.48

MILTON UNIT #58 TC=238.15 CF=230.65 BF=229.48

MILTON UNIT #61 TC=238.15 CF=230.15 BF=229.48

MILTON UNIT #60 TC=238.15 CF=230.65 BF=229.48

ENTERTAINMENT UNIT #8 TC=222.65 CF=215.15 BF=213.98 WALKOUT

LAUREL UNIT #7 TC=220.40 CF=213.90 BF=213.73 WALKOUT

REDBRIDGE UNIT #6 TC=222.40 CF=214.90 BF=213.73 WALKOUT

ADLER UNIT #5 TC=222.65 CF=215.15 BF=214.98 WALKOUT

LAUREL UNIT #4 TC=226.65 CF=219.15 BF=217.98 WALKOUT

ADLER UNIT #3 TC=229.15 CF=221.65 BF=220.48 WALKOUT

REDBRIDGE UNIT #2 TC=228.15 CF=220.65 BF=219.48 WALKOUT

ENTERTAINMENT UNIT #1 TC=228.15 CF=220.65 BF=219.48 WALKOUT

PROPOSED ROOF LEADER STORMWATER CONNECTION (TYP.)

INSTALL 2-6.5' LONG CULTEC MODEL 150HD UNITS & CONNECT TO ROOF LEADERS (TYP.) SEE DETAIL

INSTALL 1-8.5' LONG CULTEC MODEL 150HD UNIT & CONNECT TO ROOF LEADERS (TYP.) SEE DETAIL

BOTTOM LEVEL OF INFILTRATION BASIN TO BE TREATED WITH A MINIMUM 4" OF 3/4" CRUSHED STONE

PROP. INFILTRATION BASIN #16 8" HDPE INV.=213.0

PROP. RIP-RAP APRON

PROP. EMERGENCY SPILLWAY ELEV.=214.0

TOP OF DIKE ELEV.=215.9

72 LF OF 15" HDPE S=0.060

45" HDPE F.E.S. INV.=212.00

42 LF OF 12" HDPE S=0.012

12" HDPE F.E.S. INV.=209.5

PROP. RIP-RAP APRON

128 LF OF 8" HDPE S=0.01

PROP. DETENTION BASIN #22

PROP. DETENTION BASIN #15 WITH WATER QUALITY SWALE

PROP. RIP-RAP PAD

PROP. EMERGENCY SPILLWAY ELEV.=199.1

12" HDPE F.E.S. INV.=194.90

12" HDPE F.E.S. INV.=191.15

85 LF OF 12" HDPE S=0.01

TOP OF DIKE ELEV.=200.1

WATER QUALITY SWALE WITH UNDERDRAIN (SEE DETAIL)

OUTLET CONTROL STRUCTURE #15

OUTLET CONTROL STRUCTURE #22 SEE DETAIL

PROPOSED 2'Wx2'D INFILTRATION TRENCH

INSTALL (6) CULTEC MODEL 150 CHAMBERS (SEE DETAIL)

54 LF OF 12" HDPE: S=0.100

12" HDPE F.E.S. INV.=192.60

RIP RAP SWALE

12" HDPE INV.=188.91'

40 LF OF 12" HDPE S=0.010

12" HDPE F.E.S. INV.=208.50

12" HDPE F.E.S. INV.=204.95

20 LF OF 12" HDPE S=0.010

CB RIM=206.4 INV=202.4

12" HDPE L=7' S=0.014

200 LF OF 12" HDPE: S=0.046

EXISTING TEE BOX

EXISTING TEE BOX

EXISTING TEE BOX

TEE AREA FOR DRIVING RANGE

BOULDER

PAVEMENT

BIT. CART PATH

DRIPEDGE INFILTRATION TRENCH

ELECTRIC GOLF CART STORAGE BUILDING

POOL

POOL

TENNIS C

FAMILY CENTER BUILDING #352

ELEC. MOUNT. PAD UTILITY BOXES

CONCRETE PAD

HANDICAP PARKING SIGNS

CHAIN LINK FENCE

LEDGE OUTCROP

STRIPED PARKING SPACES (TYPICAL)

STONE RET WALL

EXISTING SAND TRAP

EXISTING PUTTING GREEN

EXISTING SAND TRAP

EXISTING BARN

GRAVEL CART PATH

GRAVEL CART PATH

NAGOG BROOK

NAGOG BROOK

EDGE OF BORDERING VEGETATED WETLANDS

EDGE OF BORDERING VEGETATED WETLANDS

ORDERING WETLANDS

100' BUFFER ZONE

100' BUFFER ZONE

100' BUFFER ZONE

REFER TO 'SEPTIC' SYSTEM AS-BUILT PLAN DATED NOVEMBER 14, 2005)

REFER TO SEPTIC AS-BUILT PLAN DATED NOVEMBER 14, 2005)

MONITOR WELL

UTILITY BOX

WOOD BRIDGE ELEV.=171.6'

SPILLWAY ELEV.=172.1'

4" DRAIN

12" DRAIN

6" HDPE INV.=202.55'

6" HDPE INV.=201.72'

6" HDPE INV.=203.88'

8" DRAIN

THIS PLAN TO BE UTILIZED FOR SITE LAYOUT PURPOSES ONLY

THIS PLAN TO BE UTILIZED FOR UTILITIES PURPOSES ONLY

N

S

E

W

BOHLER ENGINEERING

CIVIL & CONSULTING ENGINEERS
SURVEYORS
PROJECT MANAGERS
ENVIRONMENTAL CONSULTANTS
LANDSCAPE ARCHITECTS

CORPORATE OFFICE:
◆ WARREN, NJ

OFFICES:
◆ SOUTHBOROUGH, MA
◆ CHALFONT, PA
◆ NEW BRUNSWICK, NJ
◆ TOWSON, MD
◆ STERLING, VA
◆ LATHAM, NY
◆ ROCKY HILL, CT
◆ ROMONCOMA, NY
◆ FORT LAUDERDALE, FL
◆ CENTER VALLEY, PA
◆ TAMPA, FL

THESE PLANS AND DESIGNS ARE COPYRIGHTED BY BOHLER ENGINEERING AND SHALL REMAIN THE PROPERTY OF BOHLER ENGINEERING. ALL RIGHTS ARE RESERVED. NO PART OF THESE PLANS AND DESIGNS SHALL BE REPRODUCED, STORED OR TRANSMITTED IN ANY FORM WITHOUT PRIOR PERMISSION FROM BOHLER ENGINEERING. ONLY APPROVED, SIGNED AND SEALED PLANS SHALL BE UTILIZED FOR CONSTRUCTION PURPOSES. | © 2010 BOHLER ENGINEERING

REVISIONS

REV	DATE	COMMENT	BY
1	07-06-2011	CON-COM SUBMISSION	JAB
2			
3			
4			
5			
6			
7			
8			
9			

CALL BEFORE YOU DIG

THE FOLLOWING STATES REQUIRE NOTIFICATION BY EXCAVATORS, DESIGNERS, OR ANY PERSON PREPARING TO DISTURB THE EARTH'S SURFACE ANYWHERE IN THE STATE.
(MA, ME, NH, RI, VT 1-888-344-7233)
(CT 1-800-922-4455)
(NY 1-800-962-7962)

NOT APPROVED FOR CONSTRUCTION

PROJECT No.:	W111022
DRAWN BY:	CFD
CHECKED BY:	JAB/SPD
DATE:	05/23/2011
SCALE:	AS NOTED
CAD I.D.:	w111022ss1

PROJECT:

SITE PLAN

FOR

Pulte Homes

THE RESIDENCES AT QUAIL RIDGE

LOCATION OF SITE
354 B GREAT ROAD & SKYLINE DR.
TOWN OF ACTON
MIDDLESEX COUNTY, MA

BOHLER ENGINEERING
352 TURNPIKE ROAD
SOUTHBOROUGH, MA 01772
Phone: (508) 480-9900
Fax: (508) 480-9080
www.BohlerEngineering.com

S.P. DECOURSEY
PROFESSIONAL ENGINEER
MASSACHUSETTS LICENSE No. 36424
NEW HAMPSHIRE LICENSE No. 9308
MAINE LICENSE No. 8408
VERMONT LICENSE No. 7110
CONNECTICUT LICENSE No. 23965
RHODE ISLAND LICENSE No. 7990

SHEET TITLE:

GRADING AND DRAINAGE PLAN "E"

SHEET NUMBER:

15
OF 37

REV 0 - 05/23/2011

1"= 40'

P:\111\W111022\DWG\ss1\022ss1.dwg, 15-Grading Plan E, 4/23/2010 6:10:17 AM, joefaraone, Xerox3010-1.pc3, User934, 1.0.9999999

THIS PLAN TO BE UTILIZED FOR SITE LAYOUT PURPOSES ONLY

THIS PLAN TO BE UTILIZED FOR UTILITIES PURPOSES ONLY

N

W E

S MATCHLINE (SEE SHEET 15)

MATCHLINE (SEE SHEET 15)

N/F CONRAD

EXISTING DWELLING #354

N/F SKYLINE REALTY TRUST

N/F BENSON & EVAN REAL ESTATE, LLC

N/F PALMER FAMILY REALTY TRUST

EXISTING DWELLING #348

EXISTING BUILDING #346

ROOF OVERHANG

UTILITY BOXES

UTILITY BOX

EDGE OF BORDERING VEGETATED WETLANDS

WETLANDS

SKY LINE DRIVE (40' WIDE)

RELOCATE EXIST. C.B. (OR REPLACE) TO NEW CURB LINE & EXTEND EXIST. PIPE AT SAME SLOPE

RELOCATE EXIST. C.B. (OR REPLACE) TO NEW CURB LINE, OVER EXIST. PIPE. CUT & REMOVE EXIST. PIPE AS NECESSARY

100' BUFFER ZONE

WILLS HOLE BROOK

VERNAL POOL

ISOLATED WETLANDS

GREAT ROAD (PUBLIC — A.K.A. ROUTE 2A & ROUTE 119) 1940 STATE HIGHWAY LAYOUT)

40 20 10 0 40

1"= 40'

BOHLER ENGINEERING

CIVIL & CONSULTING ENGINEERS
SURVEYORS
PROJECT MANAGERS
ENVIRONMENTAL CONSULTANTS
LANDSCAPE ARCHITECTS

CORPORATE OFFICE:
◆ WARREN, NJ

OFFICES:
◆ SOUTHBOROUGH, MA
◆ BOWIE, MD
◆ TOWSON, MD
◆ LAUREL, MD
◆ ROANOKE, VA
◆ CENTER VALLEY, PA
◆ CHALFONT, PA
◆ PHILADELPHIA, PA
◆ STERLING, VA
◆ WEST CHESTER, PA
◆ FORT LAUDERDALE, FL
◆ TAMPA, FL

THESE DRAWINGS ARE THE PROPERTY OF BOHLER ENGINEERING AND SHALL NOT BE REPRODUCED, PUBLISHED OR USED IN ANY WAY WITHOUT PRIOR WRITTEN CONSENT. THESE PLANS ARE FOR CONSTRUCTION ONLY IF APPROVED, SIGNED AND SEALED. PLANS STAMPED "PRELIMINARY" OR "NOT FOR CONSTRUCTION" ARE FOR PRICING AND PERMITTING PURPOSES ONLY. ALL RIGHTS RESERVED COPYRIGHT © 2011 BOHLER ENGINEERING

REVISIONS

REV	DATE	COMMENT	BY
1	07-06-2011	CON-COM SUBMISSION	JAB
2			
3			
4			
5			
6			
7			
8			
9			

DIG SAFE! CALL BEFORE YOU DIG

THE FOLLOWING STATES REQUIRE NOTIFICATION BY EXCAVATORS, DESIGNERS, OR ANY PERSON PREPARING TO DISTURB THE EARTH'S SURFACE ANYWHERE IN THE STATE.
(MA, ME, NH, RI, VT 1-888-344-7233)
(CT 1-800-922-4455)
(NY 1-800-962-7962)

NOT APPROVED FOR CONSTRUCTION

PROJECT No.:	W111022
DRAWN BY:	CFD
CHECKED BY:	JAB/SPD
DATE:	05/23/2011
SCALE:	AS NOTED
CAD I.D.:	w111022ss1

PROJECT:

SITE PLAN

FOR

Pulte Homes

THE RESIDENCES AT QUAIL RIDGE

LOCATION OF SITE
354 B GREAT ROAD & SKYLINE DR.
TOWN OF ACTON
MIDDLESEX COUNTY, MA

BOHLER ENGINEERING
352 TURNPIKE ROAD
SOUTHBOROUGH, MA 01772
Phone: (508) 480-9900
Fax: (508) 480-9080
www.BohlerEngineering.com

S.P. DECOURSEY
PROFESSIONAL ENGINEER
MASSACHUSETTS LICENSE No. 38424
NEW HAMPSHIRE LICENSE No. 9308
MAINE LICENSE No. 9408
VERMONT LICENSE No. 7110
CONNECTICUT LICENSE No. 23862
RHODE ISLAND LICENSE No. 7990

SHEET TITLE:

GRADING AND DRAINAGE PLAN "F"

SHEET NUMBER:

16
OF 37

REV 0 - 05/23/2011

P:\11\W111022\DWG\wo111022ss1.dwg, 14-Grading Plan F, 4/23/2011 5:10:17 PM, joeflannery, Xerox3010i.pc3, Used34, 1.0000000000

N

W E

S

PHASE 3
PHASE 5

PHASE 5
PHASE 4

PHASE 2
PHASE 3

INSTALL SILT FENCING AT DOWN GRADIENT SIDE OF STOCKPILE

STOCKPILE LOCATION (TYP.)

HAYBALE/SILT FENCE LINE & LIMITS OF DISTURBANCE (TYP.)

EDGE OF BORDERING VEGETATED WETLANDS

TEMPORARY SETTLING BASIN. BOTTOM ELEVATION TO BE 2' ABOVE THE PROPOSED BOTTOM ELEVATION (TYP.)

20' WIDE TRAIL EASEMENT

PROPOSED SILTATION BARRIER (TYP.)

TSB

INLET FILTER (TYP.)

CONSTRUCTION ENTRANCE/EXIT (TYP.)

QUAIL RIDGE DRIVE

PARKLAND LANE

HAZELNUT

ACORN PARK DR.

NAGOG BROOK

ACORN PARK REALTY TRUST

N/F CRING

N/F WONN

N/F OFORI

LUI & ZHONG

N/F KRISHNAN

N/F SUNEEL

N/F LAPINSKI

100' BUFFER ZONE

100' VERNAL POOL BUFFER ZONE

200' RIVERFRONT AREA BUFFER

UNIT #81 UNIT #82 UNIT #83 UNIT #84 UNIT #85 UNIT #86 UNIT #87 UNIT #88 UNIT #89 UNIT #90 UNIT #91 UNIT #92 UNIT #93 UNIT #94 UNIT #95 UNIT #96 UNIT #97 UNIT #98 UNIT #99 UNIT #100 UNIT #101 UNIT #102 UNIT #103 UNIT #104 UNIT #105 UNIT #106 UNIT #107 UNIT #108 UNIT #109 UNIT #110 UNIT #111 UNIT #112 UNIT #113 UNIT #114 UNIT #115 UNIT #116 UNIT #117 UNIT #118 UNIT #119 UNIT #120 UNIT #121 UNIT #122 UNIT #123 UNIT #124 UNIT #125 UNIT #126 UNIT #127 UNIT #128 UNIT #129 UNIT #130 UNIT #131 UNIT #132 UNIT #133 UNIT #134 UNIT #135 UNIT #136 UNIT #137 UNIT #138 UNIT #139 UNIT #140 UNIT #141 UNIT #142 UNIT #143 UNIT #144 UNIT #145 UNIT #146 UNIT #147 UNIT #148 UNIT #149 UNIT #150 UNIT #151 UNIT #152 UNIT #153 UNIT #154 UNIT #155 UNIT #156 UNIT #157 UNIT #158 UNIT #159 UNIT #160 UNIT #161 UNIT #162 UNIT #163 UNIT #164 UNIT #165 UNIT #166 UNIT #167 UNIT #168 UNIT #169 UNIT #170 UNIT #171 UNIT #172 UNIT #173 UNIT #174 UNIT #175

THIS PLAN TO BE UTILIZED FOR SITE SOIL AND EROSION CONTROL PURPOSES ONLY

60 30 15 0 60

1"= 60'

BOHLER ENGINEERING

CIVIL & CONSULTING ENGINEERS
SURVEYORS
PROJECT MANAGERS
ENVIRONMENTAL CONSULTANTS
LANDSCAPE ARCHITECTS

CORPORATE OFFICE:
◆ WARREN, NJ

OFFICES:
◆ SOUTHBOROUGH, MA
◆ CHALFONT, PA
◆ ALBANY, NY
◆ PALMER, PA
◆ TOWSON, MD
◆ STERLING, VA
◆ LANSING, MI
◆ MANCHESTER, NH
◆ ROWAYTON, CT
◆ FORT LAUDERDALE, FL
◆ CENTER VALLEY, PA
◆ TAMPA, FL

THESE PLANS AND DESIGNS ARE THE PROPERTY OF BOHLER ENGINEERING AND ARE NOT TO BE USED IN WHOLE OR IN PART FOR ANY PROJECT OTHER THAN THE ONE FOR WHICH THEY ARE PREPARED AND PROVIDED BY BOHLER ENGINEERING. ONLY APPROVED, SIGNED AND SEALED PLANS SHALL BE UTILIZED FOR CONSTRUCTION PURPOSES. © 2009 BOHLER ENGINEERING

REVISIONS

REV	DATE	COMMENT	BY
1	07-06-2011	CON-COM SUBMISSION	JAB
2			
3			
4			
5			
6			
7			
8			
9			

DIG SAFE CALL BEFORE YOU DIG

THE FOLLOWING STATES REQUIRE NOTIFICATION BY EXCAVATORS, DESIGNERS, OR ANY PERSON PREPARING TO DISTURB THE EARTH'S SURFACE ANYWHERE IN THE STATE.
(MA, ME, NH, RI, VT 1-888-344-7233)
(CT 1-800-922-4455)
(NY 1-800-962-7962)

NOT APPROVED FOR CONSTRUCTION

PROJECT No.:	W111022
DRAWN BY:	CFD
CHECKED BY:	JAB/SPD
DATE:	05/23/2011
SCALE:	AS NOTED
CAD I.D.:	w111022ss1

PROJECT:

SITE PLAN

FOR

Pulte

THE RESIDENCES AT QUAIL RIDGE

LOCATION OF SITE
354 B GREAT ROAD & SKYLINE DR.
TOWN OF ACTON
MIDDLESEX COUNTY, MA

BOHLER ENGINEERING
352 TURNPIKE ROAD
SOUTHBOROUGH, MA 01772
Phone: (508) 480-0900
Fax: (508) 480-9080
www.BohlerEngineering.com

S.P. DECOURSEY
PROFESSIONAL ENGINEER
MASSACHUSETTS LICENSE No. 36424
NEW HAMPSHIRE LICENSE No. 9308
MAINE LICENSE No. 8408
VERMONT LICENSE No. 7110
CONNECTICUT LICENSE No. 23882
RHODE ISLAND LICENSE No. 7990

SHEET TITLE:

EROSION AND SEDIMENT CONTROL PLAN "A"

SHEET NUMBER:

17
OF 37

REV 0 - 05/23/2011

P:\111\W111022\DWG\Civil 11\ED2ad.dwg, 17"Erosion A, 4/23/2010, 10:71:14 AM, jsordahl

N

W E

S

'RN PARK DR.

PHASE 2
PHASE 3

PHASE 2
PHASE 3

PHASE 2

PHASE 1
PHASE 2

PHASE 2
PHASE 3

N/F PENTZ

N/F FISCHER

N/F SHANTI

N/F KRISHNAN

N/F SUNEEL

N/F SHIMIZU

N/F JANI

N/F LAPINSKI

N/F ACORN PARK REALTY TRUST

ACORN PARK REALTY TRUST

DRIVE

BUSHNELL

HEATH LANE

SEE SINGLE HYDRANT ELEV.=240.60

GREENSIDE

SKYLINE DRIVE

RYDER PATH

QUAIL RIDGE ROAD

UNIT #1
UNIT #2
UNIT #3
UNIT #4
UNIT #5
UNIT #6
UNIT #7
UNIT #8
UNIT #9
UNIT #10
UNIT #11
UNIT #12
UNIT #13
UNIT #14
UNIT #15
UNIT #16
UNIT #17
UNIT #18
UNIT #19
UNIT #20
UNIT #21
UNIT #22
UNIT #23
UNIT #24
UNIT #25
UNIT #26
UNIT #27
UNIT #28
UNIT #29
UNIT #30
UNIT #31
UNIT #32
UNIT #33
UNIT #34
UNIT #35
UNIT #36
UNIT #37
UNIT #38
UNIT #39
UNIT #40
UNIT #41
UNIT #42
UNIT #43
UNIT #44
UNIT #45
UNIT #46
UNIT #47
UNIT #48
UNIT #49
UNIT #50
UNIT #51
UNIT #52
UNIT #53
UNIT #54
UNIT #55
UNIT #56
UNIT #57
UNIT #58
UNIT #59
UNIT #60
UNIT #61
UNIT #A1
UNIT #A2
UNIT #A3
UNIT #A4
UNIT #A5
UNIT #A6
UNIT #A7
UNIT #A8
UNIT #A9
UNIT #A10
UNIT #A11
UNIT #A12
UNIT #A13
UNIT #A14
UNIT #A15
UNIT #A16
UNIT #A17
UNIT #A18

EDGE OF BORDERING VEGETATED WETLANDS

FUTURE STREET PROJECTION

TEMPORARY SETTLING BASIN BOTTOM ELEVATION TO BE 2' ABOVE THE PROPOSED BOTTOM ELEVATION (TYP.)

TSB

100' BUFFER ZONE

ISOLATED WETLANDS

VERNAL POOL

INLET FILTER (TYP.)

PROPOSED SILTATION BARRIER (TYP.)

STOCKPILE LOCATION (TYP.)

INSTALL SILT FENCING AT DOWN GRADIENT SIDE OF STOCKPILE

SF

HAYBALES/SILT FENCE LINE & LIMITS OF DISTURBANCE (TYP.)

CONSTRUCTION ENTRANCE/EXIT (TYP.)

ELECTRIC GOLF CART STORAGE BUILDING

POOL

FAMILY CENTER BUILDING

PROPOSED MAIL HOUSE

N/F GREAT ROAD TRUST

FENCE LINE & LIMIT OF DISTURBANCE (TYP.)

EDGE OF BORDERING VEGETATED WETLANDS

100' RIVERFRONT AREA BUFFER

NAGOG BROOK

THIS PLAN TO BE UTILIZED FOR SITE SOIL AND EROSION CONTROL PURPOSES ONLY

60 30 15 0 60
1"= 60'

BOHLER ENGINEERING

CIVIL & CONSULTING ENGINEERS
SURVEYORS
PROJECT MANAGERS
ENVIRONMENTAL CONSULTANTS
LANDSCAPE ARCHITECTS

CORPORATE OFFICE:
◆ WARREN, NJ

OFFICES:
◆ SOUTHBOROUGH, MA
◆ ALBANY, NY
◆ TOWSON, MD
◆ ALLENTOWN, PA
◆ ROANOKE, VA
◆ ROMONOMA, NY
◆ CENTER VALLEY, PA
◆ STERLING, VA
◆ PHILADELPHIA, PA
◆ FORT LAUDERDALE, FL
◆ TAMPA, FL

THE INFORMATION CONTAINED IN THIS DRAWING COMPRISES THE CONFIDENTIAL AND PROPRIETARY PROPERTY OF BOHLER ENGINEERING AND IS NOT TO BE REPRODUCED, USED OR DISCLOSED WITHOUT THE WRITTEN CONSENT OF BOHLER ENGINEERING. ONLY APPROVED, SIGNED AND SEALED PLANS SHALL BE UTILIZED FOR CONSTRUCTION PURPOSES. © 2010 BOHLER ENGINEERING

REVISIONS

REV	DATE	COMMENT	BY
1	07-06-2011	CON-COM SUBMISSION	JAB
2			
3			
4			
5			
6			
7			
8			
9			

THE FOLLOWING STATES REQUIRE NOTIFICATION BY EXCAVATORS, DESIGNERS, OR ANY PERSON PREPARING TO DISTURB THE EARTH'S SURFACE ANYWHERE IN THE STATE.
(MA, ME, NH, RI, VT 1-888-344-7233)
(CT 1-800-922-4455)
(NY 1-800-962-7962)

NOT APPROVED FOR CONSTRUCTION

PROJECT No.:	W111022
DRAWN BY:	CFD
CHECKED BY:	JAB/SPD
DATE:	05/23/2011
SCALE:	AS NOTED
CAD I.D.:	w111022ess1

PROJECT:

SITE PLAN

FOR

Pulte

THE RESIDENCES AT QUAIL RIDGE

LOCATION OF SITE
354 B GREAT ROAD & SKYLINE DR.
TOWN OF ACTON
MIDDLESEX COUNTY, MA

BOHLER ENGINEERING
352 TURNPIKE ROAD
SOUTHBOROUGH, MA 01772
Phone: (508) 480-9900
Fax: (508) 480-9080
www.BohlerEngineering.com

S.P. DECOURSEY

PROFESSIONAL ENGINEER
MASSACHUSETTS LICENSE No. 38424
NEW HAMPSHIRE LICENSE No. 9308
MAINE LICENSE No. 8408
VERMONT LICENSE No. 7110
CONNECTICUT LICENSE No. 23862
RHODE ISLAND LICENSE No. 7990

SHEET TITLE:
EROSION AND SEDIMENT CONTROL PLAN "B"

SHEET NUMBER:
18
OF 37

REV 0 - 05/23/2011

P:\111\W111022\DWG\w111022ess1.dwg, 18-Erosion B, 4/23/2010, 10:17:14 AM, joshuamedza, Xerox3510 pc3, 1:1on4534, 18.9999999

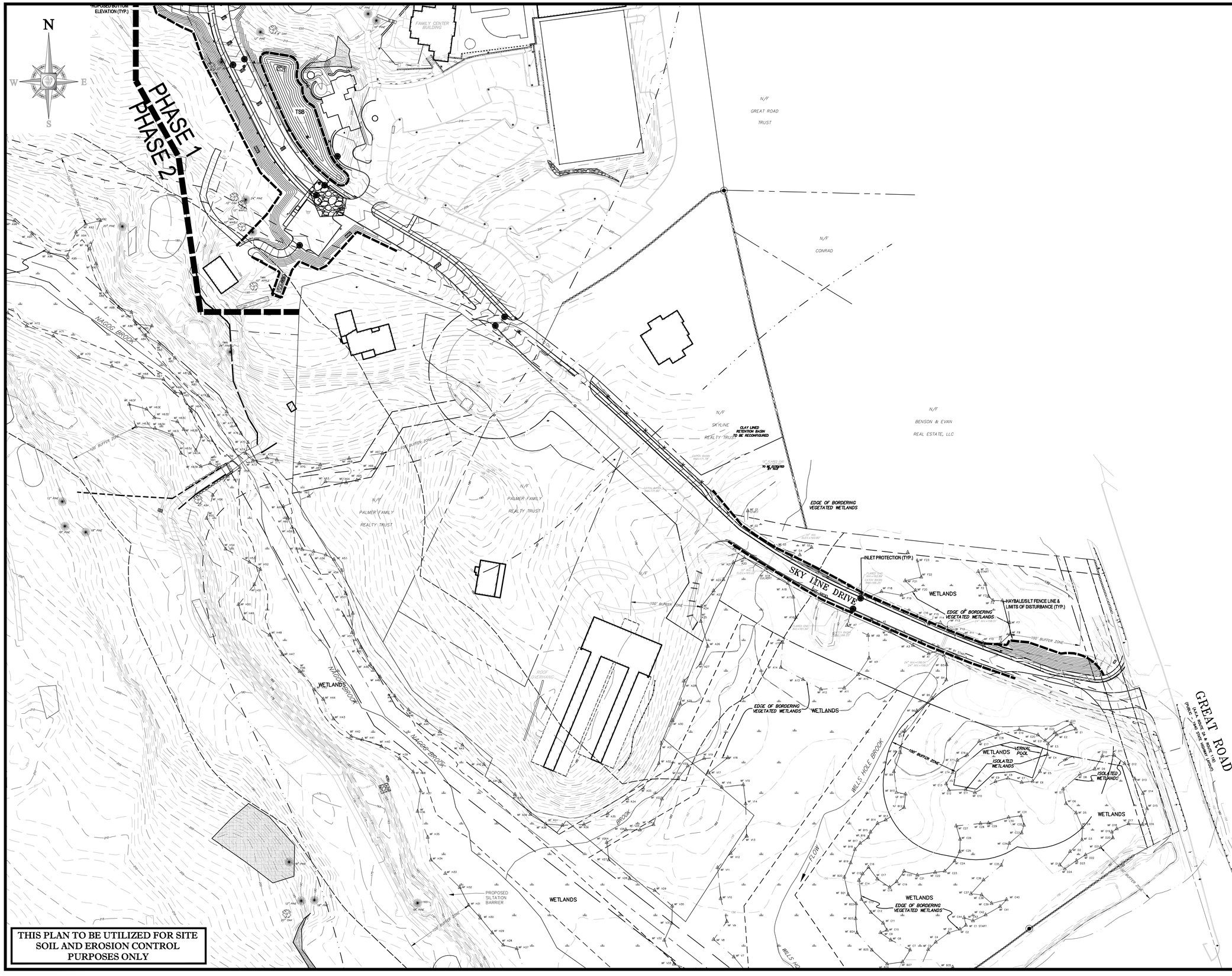

THIS PLAN TO BE UTILIZED FOR SITE SOIL AND EROSION CONTROL PURPOSES ONLY

P:\111W\1102DWG\set1\022set.dwg, 1/Erosion C, 4/23/2011 10:17:14 AM, joefiumara, Xerox3010i.pc3, Use64k.ctb

BOHLER ENGINEERING

CORPORATE OFFICE:
◆ WARREN, NJ

OFFICES:
◆ SOUTHBOROUGH, MA
◆ BOHEMIA, NY
◆ TOWSON, MD
◆ LAUREL, MD
◆ ROANOKE/OMA, NY
◆ CENTER VALLEY, PA
◆ CHALFONT, PA
◆ PHILADELPHIA, PA
◆ STERLING, VA
◆ HARRISBURG, VA
◆ FORT LAUDERDALE, FL
◆ TAMPA, FL

CIVIL & CONSULTING ENGINEERS
SURVEYORS
PROJECT MANAGERS
ENVIRONMENTAL CONSULTANTS
LANDSCAPE ARCHITECTS

THESE DRAWINGS ARE THE PROPERTY OF BOHLER ENGINEERING AND ARE NOT TO BE USED IN WHOLE OR IN PART FOR ANY OTHER PROJECT WITHOUT THE EXPRESS WRITTEN PERMISSION FROM BOHLER ENGINEERING. ONLY APPROVED, SIGNED AND SEALED PLANS SHALL BE CLASSED OR CONSTRUCTED FROM. © 2007 BOHLER ENGINEERING

REVISIONS

REV	DATE	COMMENT	BY
1	07-06-2011	CON-COM SUBMISSION	JAB
2			
3			
4			
5			
6			
7			
8			
9			

THE FOLLOWING STATES REQUIRE NOTIFICATION BY EXCAVATORS, DESIGNERS, OR ANY PERSON PREPARING TO DISTURB THE EARTHS SURFACE ANYWHERE IN THE STATE.
(MA, ME, NH, RI, VT 1-888-344-7233)
(CT 1-800-922-4455)
(NY 1-800-962-7962)

NOT APPROVED FOR CONSTRUCTION

PROJECT No.:	W111022
DRAWN BY:	CFD
CHECKED BY:	JAB/SPD
DATE:	05/23/2011
SCALE:	AS NOTED
CAD I.D.:	w111022ss1

PROJECT:

SITE PLAN

FOR

THE RESIDENCES AT QUAIL RIDGE

LOCATION OF SITE
354 B GREAT ROAD & SKYLINE DR.
TOWN OF ACTON
MIDDLESEX COUNTY, MA

BOHLER ENGINEERING
352 TURNPIKE ROAD
SOUTHBOROUGH, MA 01772
Phone: (508) 480-9900
Fax: (508) 480-9080
www.BohlerEngineering.com

S.P. DECOURSEY
PROFESSIONAL ENGINEER
MASSACHUSETTS LICENSE No. 36424
NEW HAMPSHIRE LICENSE No. 9308
MAINE LICENSE No. 8408
VERMONT LICENSE No. 7110
CONNECTICUT LICENSE No. 23965
RHODE ISLAND LICENSE No. 7990

SHEET TITLE:
EROSION AND SEDIMENT CONTROL PLAN "C"

SHEET NUMBER:
19
OF 37

REV 0 - 05/23/2011

EROSION & SEDIMENT CONTROL NOTES

1. ALL SEDIMENT AND EROSION CONTROL MEASURES SHALL BE DONE AS SET FORTH IN THE "EROSION AND SEDIMENT CONTROL HANDBOOK" PUBLISHED BY THE U.S.D.A. SOIL CONSERVATION SERVICE, STORRS, CONNECTICUT, 1972, AS AMENDED.

2. THOSE AREAS UNDERGOING ACTUAL CONSTRUCTION WILL BE LEFT IN AN UNTREATED OR UNVEGETATED CONDITION FOR A MINIMUM TIME. AREAS SHALL BE PERMANENTLY STABILIZED WITHIN 15 DAYS OF FINAL GRADING AND TEMPORARILY STABILIZED WITHIN 30 DAYS OF INITIAL DISTURBANCE OF THE SOIL. IF THE DISTURBANCE IS WITHIN 100 FEET OF A STREAM OR POND, THE AREA SHALL BE STABILIZED WITHIN 7 DAYS OR PRIOR TO ANY STORM EVENT (THIS WOULD INCLUDE WETLANDS).

3. SEDIMENT BARRIERS (SILT FENCE, HAY BARRIERS, ETC.) SHOULD BE INSTALLED PRIOR TO ANY SOIL DISTURBANCE OF THE CONTRIBUTING DRAINAGE AREA ABOVE THEM. MULCH NETTING SHALL BE USED TO ANCHOR MULCH IN ALL AREAS WITH SLOPES GREATER THAN 15% AFTER OCTOBER 1ST THE SAME APPLIES FOR ALL SLOPES GREATER THAN 8%.

4. INSTALL SILT FENCE AT TOE OF SLOPE TO FILTER SILT FROM RUNOFF. SEE SILT FENCE DETAIL FOR PROPER INSTALLATION. SILT FENCE WILL REMAIN IN PLACE PER NOTE #5.

5. ALL EROSION CONTROL STRUCTURES WILL BE INSPECTED, REPLACED AND/OR REPAIRED EVERY 7 DAYS AND IMMEDIATELY FOLLOWING ANY SIGNIFICANT RAINFALL OR SNOW MELT OR WHEN NO LONGER SERVICEABLE DUE TO SEDIMENT ACCUMULATION OR DECOMPOSURE. SEDIMENT DEPOSITS SHOULD BE REMOVED AFTER EACH STORM EVENT. THEY MUST BE REMOVED WHEN DEPOSITS REACH APPROXIMATELY ONE HALF THE HEIGHT OF THE BARRIER. SEDIMENT CONTROL DEVICES SHALL REMAIN IN PLACE AND BE MAINTAINED BY THE CONTRACTOR UNTIL AREAS UPSLOPE ARE STABILIZED BY TURF.

6. NO SLOPES, EITHER PERMANENT OR TEMPORARY, SHALL BE STEEPER THAN TWO TO ONE (2:1).

7. IF FINAL SEEDING OF THE DISTURBED AREAS IS NOT COMPLETED 45 DAYS PRIOR TO THE FIRST KILLING FROST, USE TEMPORARY MULCH (DORMANT SEEDING MAY BE ATTEMPTED AS WELL) TO PROTECT THE SITE AND DELAY SEEDING UNTIL THE NEXT RECOMMENDED SEEDING PERIOD.

8. TEMPORARY SEEDING OF DISTURBED AREAS THAT HAVE NOT BEEN FINAL GRADED SHALL BE COMPLETED 45 DAYS PRIOR TO THE FIRST KLLING FROST TO PROTECT FROM SPRING RUNOFF PROBLEMS.

9. DURING THE CONSTRUCTION PHASE, INTERCEPTED SEDIMENT WILL BE RETURNED TO THE SITE AND REGRADED ONTO OPEN AREAS.

10. REVEGETATION MEASURES WILL COMMENCE UPON COMPLETION OF CONSTRUCTION EXCEPT AS NOTED ABOVE. ALL DISTURBED AREAS NOT OTHERWISE STABILIZED WILL BE GRADED, SMOOTHED, AND PREPARED FOR FINAL SEEDING AS FOLLOWS:

    10.1. SIX INCHES OF LOAM WILL BE SPREAD OVER DISTURBED AREAS AND SMOOTHED TO A UNIFORM SURFACE.

    10.2. APPLY LIMESTONE AND FERTILIZER ACCORDING TO SOIL TEST. IF SOIL TESTING IS NOT FEASIBLE ON SMALL OR VARIABLE SITES, OR WHERE TIMING IS CRITICAL, FERTILIZER MAY BE APPLIED AT THE RATE OF 800 LB PER ACRE OR 18.4 LB PER 1,000 SF USING 10-20-20 OR EQUIVALENT. APPLY GROUND LIMESTONE (EQUIVALENT TO 50% CALCIUM PLUS MAGNESIUM OXIDE) AT A RATE OF 3 TONS PER ACRE (138 LB PER1,000 SF).

    10.3. FOLLOWING SEED BED PREPARATION, DITCHES AND BACK SLOPES WILL BE SEEDED TO A MIXTURE OF 47% CREEPING RED FESCUE, 5% REDTOP, AND 48% TALL FESCUE. THE LAWN AREAS WILL BE SEEDED TO A PREMIUM TURF MIXTURE OF 44% KENTUCKY BLUE-GRASS, 44% CREEPING RED FESCUE, AND 12% PERENNIAL RYEGRASS: SEEDING RATE IS 1.03 LBS PER 1,000 SF LAWN QUALITY SOD MAY BE SUBSTITUTED FOR SEED.

    10.4. HAY MULCH AT THE RATE OF 70-90 LBS PER 1,000 SF. A HYDRO-APPLICATION OF WOOD OR PAPER FIBER SHALL BE APPLIED FOLLOWING SEEDING. A SUITABLE BINDER SUCH AS CURASOL OR RMB PLUS WILL BE USED ON HAY MULCH FOR WIND CONTROL.

11. ALL TEMPORARY EROSION CONTROL MEASURES SHALL BE REMOVED ONCE THE SITE IS STABILIZED.

12. WETLANDS WILL BE PROTECTED W/HAYBALES AND/OR SILT FENCE INSTALLED AT THE EDGE OF THE WETLAND OR THE BOUNDARY OF WETLAND DISTURBANCE.

13. ALL AREAS WITHIN 100 FEET OF A FLAGGED WETLAND OR STREAM SHALL HAVE AN EXPOSURE WINDOW OF NOT MORE THAN 7 DAYS.

14. ALL AREAS WITHIN 100 FEET OF A FLAGGED WETLAND OR STREAM SHALL FOLLOW APPROPRIATE EROSION CONTROL MEASURES PRIOR TO EACH STORM IF NOT BEING ACTIVELY WORKED.
15. PHASING SHOWN IS FOR CONCEPTUAL PURPOSES ONLY. THE DEVELOPER MAY ALTER PHASES TO ACCOMODATE SITE EARTHWORK, UTILITY INSTALLATION, AND BUILDING PROGRAM AS NEEDED, AS LONG AS APPROPRIATE EROSION CONTROLS AND BEST MANAGEMENT PRACTICES ARE IN PLACE.

MULCH

LOCATION	MULCH	RATE (1000 SF)
PROTECT AREA	STRAW OR HAY	100 POUNDS
WINDY AREA	SHREDDED OR CHOPPED CORNSTALKS STRAW OR HAY (ANCHORED)*	185-275 POUNDS 100 POUNDS
MODERATE TO HIGH VELOCITY AREAS OR STEEP SLOPES GREATER THAN 3:1	JUTE MESH OR EXCELSIOR MAT	AS REQUIRED
GREATER THAN 3:1	(REFER TO GEOTECHNICAL REPORT FOR FINAL DESIGN REQUIREMENT)	

* A HYDRO-APPLICATION OF WOOD, OR PAPER FIBER MAY BE APPLIED FOLLOWING SEEDING. A SUITABLE BINDER SUCH AS CURASOL OR RMB
PLUS SHALL BE USED ON HAY MULCH FOR WIND CONTROL.

MULCH ANCHORING
ANCHOR MULCH WITH PEG AND TWINE (1 SQ. YD/BLOCK); MULCH NETTING (AS PER MANUFACTURER); WOOD CELLULOSE FIBER (750 LBS/ACRE); CHEMICAL TACK (AS PER MANUFACTURER'S SPECIFICATIONS); USE OF A SERRATED STRAIGHT DISK. WETTING FOR SMALL AREAS AND ROAD DITCHES MAY BE PERMITTED.

EROSION CONTROL NOTES DURING WINTER CONSTRUCTION

1. WINTER CONSTRUCTION PERIOD: NOVEMBER 1 THROUGH APRIL 15.

2. WINTER EXCAVATION AND EARTHWORK SHALL BE DONE SUCH THAT NO MORE THAN 1 ACRE OF THE SITE IS WITHOUT STABILIZATION AT ANY ONE TIME.

3. EXPOSED AREA SHOULD BE LIMITED TO THAT CAN BE MULCHED IN ONE DAY PRIOR TO ANY SNOW EVENT.

4. CONTINUATION OF EARTHWORK OPERATION ON ADDITIONAL AREAS SHALL NOT BEGIN UNTIL THE EXPOSED SOIL SURFACE ON THE AREA BEING WORKED HAS BEEN STABILIZED SUCH THAT NO LARGER AREA OF THE SITE IS WITHOUT EROSION CONTROL PROTECTION AS LISTED IN ITEM 2 ABOVE.

5. AN AREA SHALL BE CONSIDERED TO HAVE BEEN STABILIZED WHEN EXPOSED SURFACES HAVE BEEN EITHER MULCHED WITH STRAW OR HAY AT A RATE OF 100 LB. PER 1,000 SQUARE FEET (WITH OR WITHOUT SEEDING) OR DORMANT SEEDED, MULCHED AND ADEQUATELY ANCHORED BY AN APPROVED ANCHORING TECHNIQUE.

6. BETWEEN THE DATES OF OCTOBER 15 AND APRIL 1ST, LOAM OR SEED WILL NOT BE REQUIRED. DURING PERIODS OF ABOVE FREEZING TEMPERATURES THE SLOPES SHALL BE FINE GRADED AND EITHER PROTECTED WITH MULCH OR TEMPORARILY SEEDED AND MULCHED UNTIL SUCH TIME AS THE FINAL TREATMENT CAN BE APPLIED. IF THE DATE IS AFTER NOVEMBER 1ST AND IF THE EXPOSED AREA HAS BEEN LOAMED, FINAL GRADED AND IS SMOOTH, THEN THE AREA MAY BE DORMANT SEEDED AT A RATE OF 200 - 300% HIGHER THAN SPECIFIED FOR PERMANENT SEED AND THEN MULCHED. IF CONSTRUCTION CONTINUES DURING FREEZING WEATHER, ALL EXPOSED AREAS SHALL BE CONTINUOUSLY GRADED BEFORE FREEZING AND THE SURFACE TEMPORARILY PROTECTED FROM EROSION BY THE APPLICATION OF MULCH. SLOPES SHALL NOT BE LEFT UNEXPOSED OVER THE WINTER OR ANY OTHER EXTENDED TIME OF WORK SUSPENSION UNLESS TREATED IN THE ABOVE MANNER. UNTIL SUCH TIME AS WEATHER CONDITIONS ALLOW DITCHES TO BE FINISHED WITH THE PERMANENT SURFACE TREATMENT, EROSION SHALL BE CONTROLLED BY THE INSTALLATION OF BALES OF HAY OR STONE CHECK DAMS IN ACCORDANCE WITH THE STANDARD DETAILS.

7. MULCHING REQUIREMENTS:

    7.1. BETWEEN THE DATES OF NOVEMBER 1ST AND APRIL 15TH ALL MULCH SHALL BE ANCHORED BY EITHER PEG LINE, MULCH NETTING OR WOOD CELLULOSE FIBER.

    7.2. MULCH NETTING SHALL BE USED TO ANCHOR MULCH IN ALL DRAINAGE WAYS WITH A SLOPE GREATER THAN 3% FOR SLOPE EXPOSED TO DIRECT WINDS AND FOR ALL OTHER SLOPES GREATER THAN 8%.

    7.3. MULCH NETTING SHALL BE USED TO ANCHOR MULCH IN ALL AREAS WITH SLOPES GREATER THAN 15% AFTER OCTOBER 1ST THE SAME APPLIES FOR ALL SLOPES GREATER THAN 8%.

8. AFTER NOVEMBER 1ST THE CONTRACTOR SHALL APPLY DORMANT SEEDING OR MULCH AND ANCHORING ON ALL BARE EARTH AT THE END OF EACH WORKING DAY.

9. DURING THE WINTER CONSTRUCTION PERIOD ALL SNOW SHALL BE REMOVED FROM AREAS OF SEEDING AND MULCHING PRIOR TO PLACEMENT.

10. STOCKPILING OF MATERIALS (DIRT, WOOD, CONSTRUCTION MATERIALS, ETC.) MUST REMAIN COVERED AT ALL TIMES TO MINIMIZE ANY DUST PROBLEMS THAT MAY OCCUR WITH ADJACENT PROPERTIES AND TO PROVIDE MAXIMUM PROTECTION AGAINST EROSION RUNOFF.

11. EXISTING CATCH BASIN STRUCTURES SHALL BE PROTECTED UNTIL SUCH TIME AS THEY ARE REMOVED.

THIS PLAN TO BE UTILIZED FOR SITE SOIL AND EROSION CONTROL PURPOSES ONLY

P:\1\W111022\DWG\w111022ss1.dwg , 20-E&S Note-Details , 4/23/2010 , 10:17:14 AM , jcerkanowicz , XeroX510-1.pc3 , User634 , 1:0.99999997

CONSTRUCTION SEQUENCE

THE FOLLOWING CONSTRUCTION SEQUENCE IS RECOMMENDED:

-INSTALLATION OF STABILIZED CONSTRUCTION ENTRANCE/EXIT (AS SHOWN)

-INSTALLATION OF EROSION CONTROL BARRIER (HAYBALES AND SILT FENCE) (AS SHOWN)

-INSTALLATION OF INLET PROTECTION IN STREET (AS SHOWN)

-DEMOLITION OF EXISTING SITE STRUCTURES (SEE DEMOLITION PLAN)

-DEMOLITION OF EXISTING SITE PAVEMENT AND AMENITIES (SEE DEMOLITION PLAN)

-CLEARING AND GRUBBING

-INSTALLATION OF TEMPORARY SWALES AND SEDIMENT BASINS

-EARTHWORK AND EXCAVATION/FILLING AS NECESSARY

-CONSTRUCTION OF UTILITIES

-STABILIZE PERMANENT LAWN AREAS AND SLOPES WITH TEMPORARY SEEDING

-INSTALLATION OF INLET PROTECTION ON ON-SITE UTILITIES (AS SHOWN)

-CONSTRUCTION OF BUILDINGS AND ROADWAYS

-CONSTRUCTION OF ALL CURBING AND LANDSCAPE ISLANDS AS INDICATED ON THE PLANS

-SPREAD TOPSOIL ON SLOPED AREAS AND SEED AND MULCH

-FINAL GRADING OF ALL SLOPED AREAS

-PLACE 6" TOPSOIL ON SLOPES AFTER FINAL GRADING COMPLETED. FERTILIZE, SEED, AND MULCH SEED MIXTURE TO BE INSTALLED REQUIRED.

-REMOVAL OF THE TEMPORARY SEDIMENT BASINS

-PAVE PARKING LOT AND ROADWAYS

-LANDSCAPING PER LANDSCAPING PLAN

-REMOVE EROSION CONTROLS AS DISTURBED AREAS BECOME STABILIZED TO 70% STABLIZATION OR GREATER.

DRIVEWAY CONSTRUCTION PHASES:

PHASE ONE: SKYLINE DRIVE, RYDER PATH, PORTION OF GREENSIDE LANE & ASSOCIATED UTILITY SYSTEMS, ALONG WITH CONNECTION TO PALMER LANE.

PHASE TWO: PORTION OF GREENSIDE LANE AND QUAIL RIDGE DRIVE & ASSOC. UTILITY SYSTEMS.

PHASE THREE: TWO PORTIONS OF QUAIL RIDGE DRIVE, PARKLAND LANE, AND ASSOCIATED UTILITY SYSTEMS, ALONG WITH CONNECTION TO HAZELNUT STREET.

PHASE FOUR: PORTION OF QUAIL RIDGE DRIVE & ASSOC. UTILITY SYSTEMS.

PHASE FIVE: REMAINING PORTION OF QUAIL RIDGE DRIVE & ASSOC. UTILITY SYSTEMS.

ALL PHASES: LAND SHALL BE DEVELOPED IN INCREMENTS OF WORKABLE SIZE WHICH CAN BE COMPLETED DURING A SINGLE CONSTRUCTION SEASON. EROSION AND SEDIMENTATION CONTROL MEASURES SHALL BE COORDINATED WITH THE SEQUENCE OF GRADING, DEVELOPMENT, AND CONSTRUCTION OPERATIONS. CONTROL MEASURES SUCH AS HYDROSEEDING, BERMS, INTERCEPTOR DITCHES, TERRACES, AND SEDIMENT TRAPS SHALL BE PUT INTO EFFECT PRIOR TO THE COMMENCEMENT OF EACH INCREMENT OR PHASE OF THE PROCESS.

NOTE: THE SITE IS SUBJECT TO AN EPA NPDES CONSTRUCTION GENERAL PERMIT. THE SWPPP THAT IS REQUIRED AS PART OF THE NPDES WILL GOVERN EROSION & SEDIMENT CONTROLS.

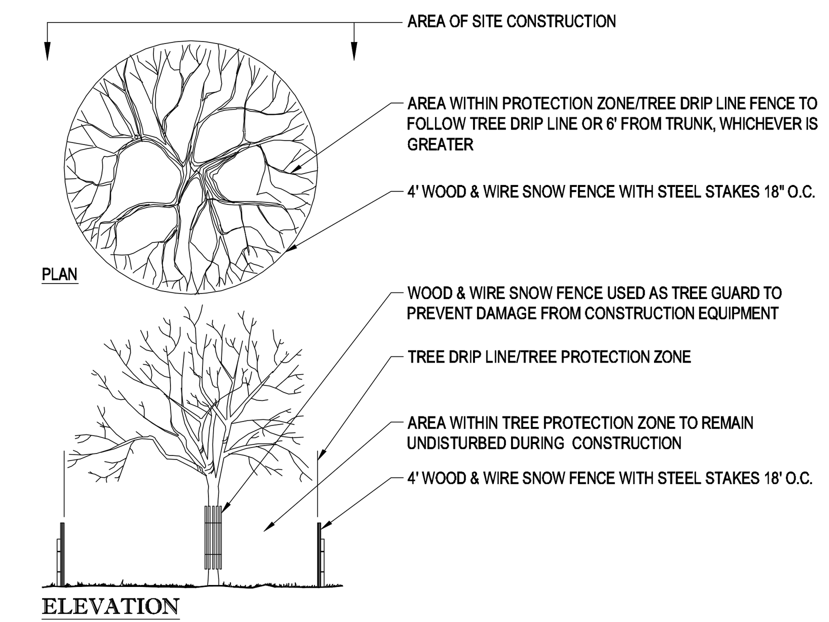

TREE PROTECTION DURING CONSTRUCTION — N.T.S.

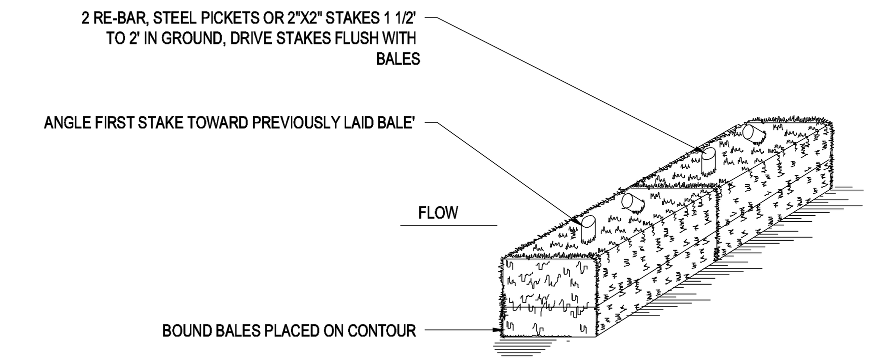

DRAINAGE AREA NO MORE THAN 1/4 AC. PER 100 FEET OF STRAW BALE DIKE FOR SLOPES LESS THAN 25%

NOTES:
1. BALES SHALL BE PLACED AT THE TOP OF A SLOPE OR ON THE CONTOUR AND IN A ROW WITH ENDS TIGHTLY ABUTTING THE ADJACENT BALES.

2. EACH BALE SHALL BE PLACED SO THE BINDINGS ARE HORIZONTAL.

3. BALES SHALL BE SECURELY ANCHORED IN PLACE BY EITHER TWO STAKES OR RE-BARS DRIVEN THROUGH THE BALE. THE FIRST STAKE IN EACH BALE SHALL BE DRIVEN TOWARD THE PREVIOUSLY LAID BALE AT AN ANGLE TO FORCE THE BALES TOGETHER. STAKES SHALL BE DRIVEN FLUSH WITH THE BALE.

4. INSPECTION SHALL BE FREQUENT AND REPAIR REPLACEMENT SHALL BE PROMPTLY AS NEEDED.

5. BALES SHALL BE REMOVED WHEN THEY HAVE SERVED THEIR USEFULNESS SO AS NOT TO BLOCK OR IMPEDE STORM FLOW OR DRAINAGE.

STRAW BALE DETAIL — N.T.S.

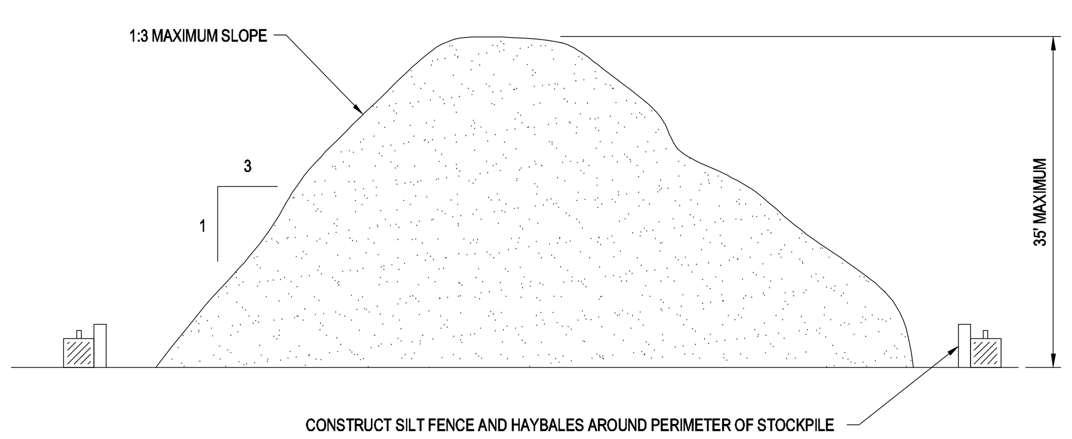

TEMPORARY STOCKPILE DETAIL — N.T.S.

INSTALLATION:
1. EXCAVATE A 6"x 6" TRENCH ALONG THE LINE OF EROSION CONTROL OF THE SITE.
2. UNROLL SILTATION FENCE AND POSITION THE POSTS AGAINST THE BACK (DOWNSTREAM) WALL OF THE TRENCH (NET SIDE AWAY FROM FLOW DIRECTION).
3. DRIVE THE POST INTO THE GROUND UNTIL THE NETTING IS LAYING ACROSS THE TRENCH BOTTOM.
4. LAY THE TOE-IN FLAP OF THE FABRIC ONTO THE UNDISTURBED BOTTOM OF THE TRENCH, BACKFILL THE TRENCH AND TAMP THE SOIL. TOE-IN CAN ALSO BE ACCOMPLISHED BY LAYING FABRIC FLAP ON UNDISTURBED GROUND AND PILING & TAMP- ING FILL AT THE BASE.

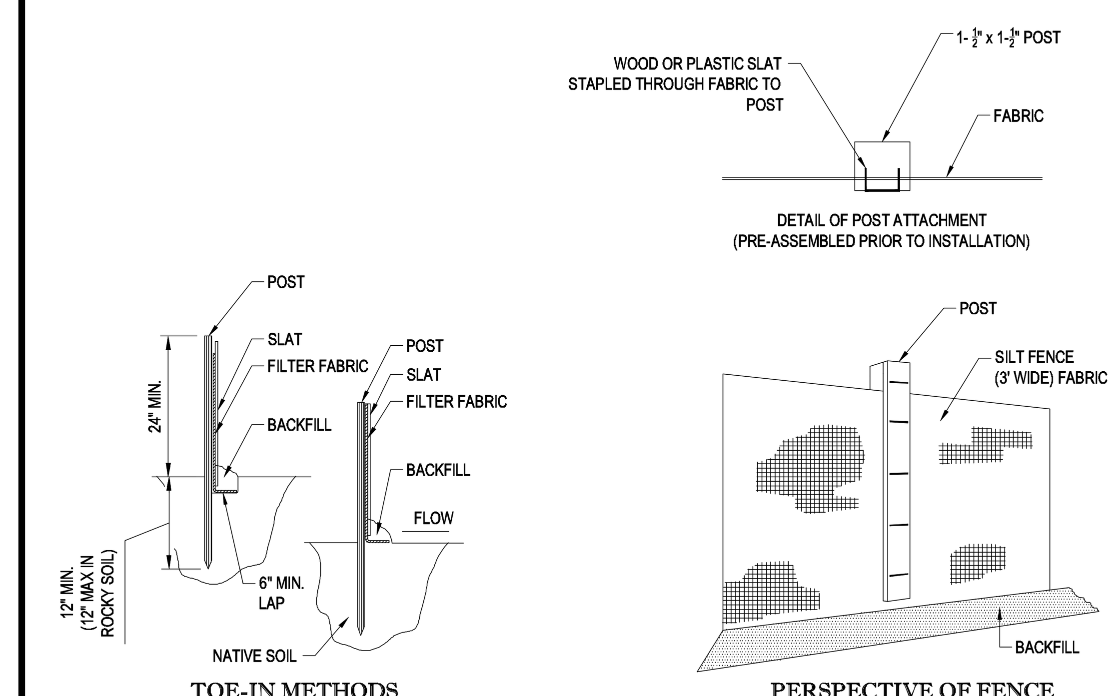

TYP. SILTATION FENCE DETAIL — N.T.S.

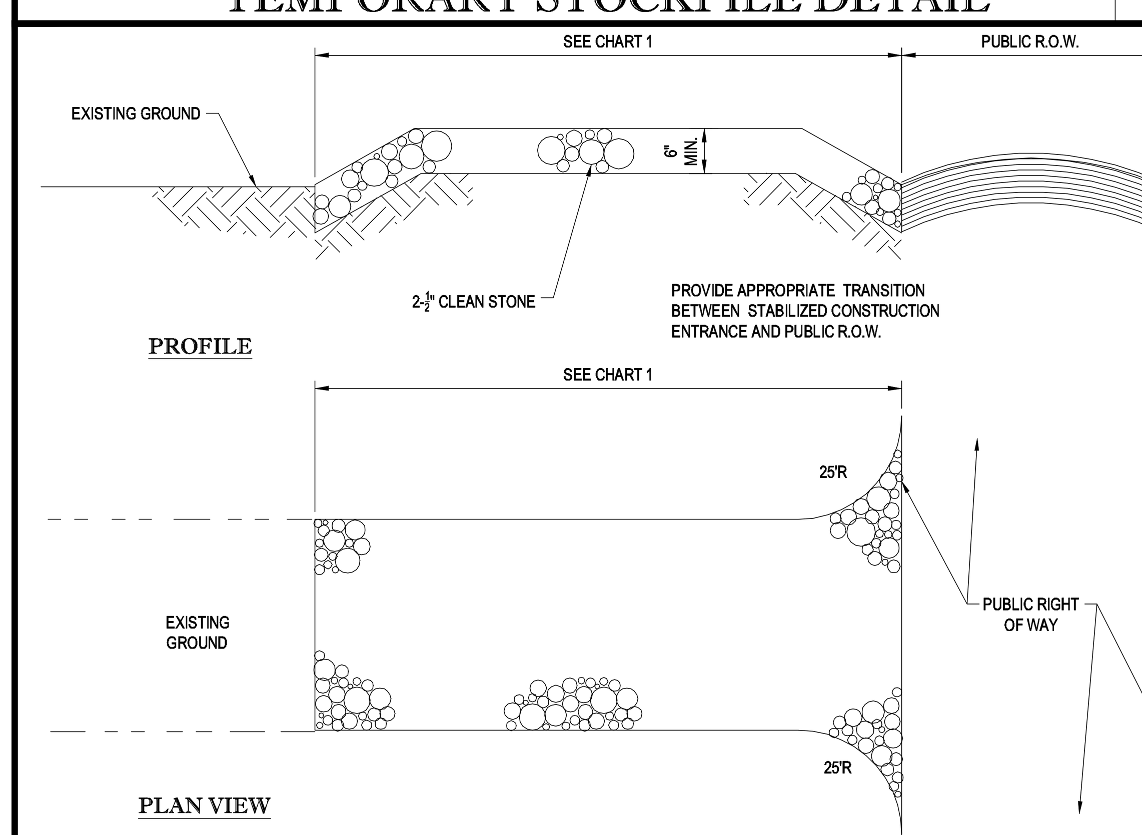

PERCENT SLOPE OF ROADWAY	LENGTH OF STONE REQUIRED	
	COARSE GRAINED SOILS	FINE GRAINED SOILS
0 TO 2%	50 FT	100 FT
2% TO 5%	100 FT	200FT
>5%	ENTIRE ENTRANCE STABILIZED WITH FABC BASE COURSE (1)	

(1) AS PRESCRIBED BY LOCAL ORDINANCE OR OTHER GOVERNING AUTHORITY.

CHART 1

STABILIZED CONSTRUCTION ENTRANCE — N.T.S.

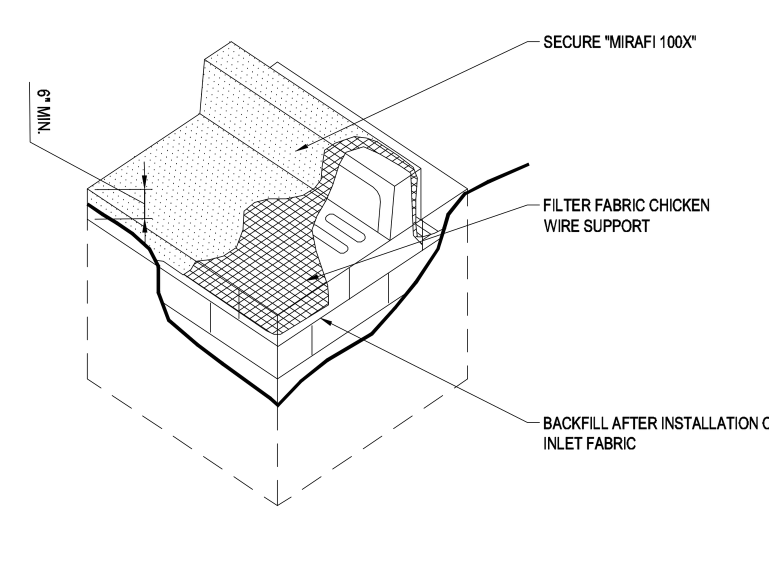

1. CONTRACTOR IS TO CLEAN INLET FILTER AFTER EVERY STORM

2. CONTRACTOR TO REMOVE FABRIC AND MESH JUST PRIOR TO PAVING.

INLET FILTER DETAIL — N.T.S.

BOHLER ENGINEERING
CIVIL & CONSULTING ENGINEERS
SURVEYORS
PROJECT MANAGERS
ENVIRONMENTAL CONSULTANTS
LANDSCAPE ARCHITECTS
CORPORATE OFFICE:
♦ WARREN, NJ
OFFICES:
♦ SOUTHBOROUGH, MA ♦ BOWIE, MD ♦ TOWSON, MD ♦ ALBANY, NY ♦ RONKONKOMA, NY ♦ CENTER VALLEY, PA
♦ CHALFONT, PA ♦ PHILADELPHIA, PA ♦ STERLING, VA ♦ WARRENTON, VA ♦ FORT LAUDERDALE, FL ♦ TAMPA, FL

THE INFORMATION, DESIGN AND CONTENT OF THIS PLAN ARE PROPRIETARY AND SHALL NOT BE COPIED OR USED FOR ANY PURPOSE WITHOUT PRIOR WRITTEN AUTHORIZATION FROM BOHLER ENGINEERING. ONLY APPROVED, SIGNED AND SEALED PLANS SHALL BE UTILIZED FOR CONSTRUCTION PURPOSES © 2008 BOHLER ENGINEERING.

REVISIONS

REV	DATE	COMMENT	BY
1	07-06-2011	CON-COM SUBMISSION	JAB
2			
3			
4			
5			
6			
7			
8			
9			

STOP - CALL BEFORE YOU DIG!

THE FOLLOWING STATES REQUIRE NOTIFICATION BY EXCAVATORS, DESIGNERS, OR ANY PERSON PREPARING TO DISTURB THE EARTH'S SURFACE ANYWHERE IN THE STATE.
(MA, ME, NH, RI, VT 1-888-344-7233)
(CT 1-800-922-4455)
(NY 1-800-962-7962)

NOT APPROVED FOR CONSTRUCTION

PROJECT No.:	W111022
DRAWN BY:	CFD
CHECKED BY:	JAB/SPD
DATE:	05/23/2011
SCALE:	AS NOTED
CAD I.D.:	w111022ss1

PROJECT:

SITE PLAN
FOR
Pulte Homes
THE RESIDENCES AT QUAIL RIDGE
LOCATION OF SITE
354 B GREAT ROAD & SKYLINE DR.
TOWN OF ACTON
MIDDLESEX COUNTY, MA

BOHLER ENGINEERING
352 TURNPIKE ROAD
SOUTHBOROUGH, MA 01772
Phone: (508) 480-9900
Fax: (508) 480-9080
www.BohlerEngineering.com

S.P. DECOURSEY
PROFESSIONAL ENGINEER
MASSACHUSETTS LICENSE No. 36424
NEW HAMPSHIRE LICENSE No. 9308
MAINE LICENSE No. 8408
VERMONT LICENSE No. 7110
CONNECTICUT LICENSE No. 23862
RHODE ISLAND LICENSE No. 7990

SHEET TITLE:
SOIL EROSION CONTROL NOTES & DETAILS SHEET

SHEET NUMBER:

REV 0 - 05/23/2011

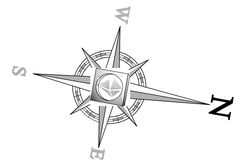

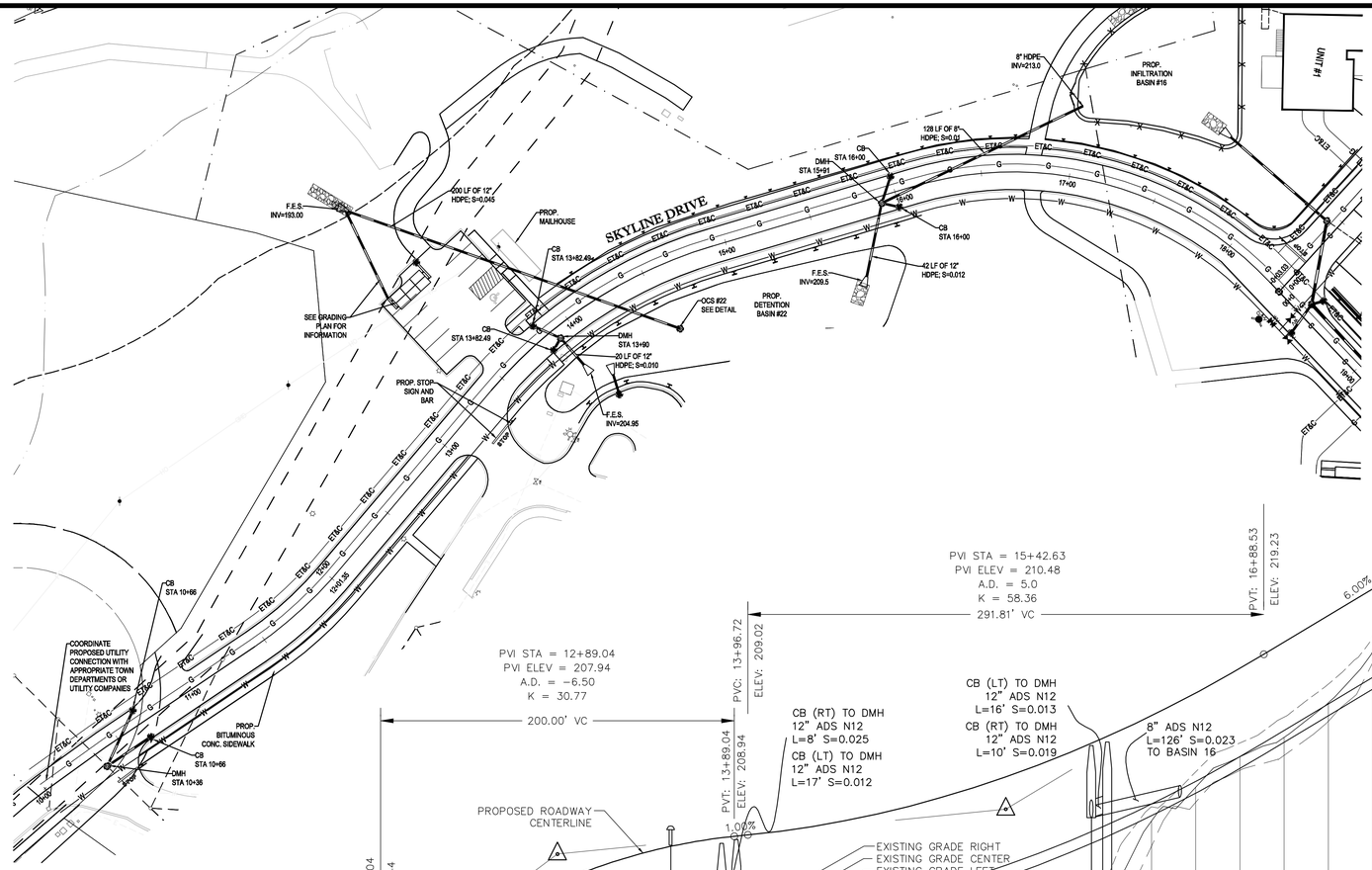

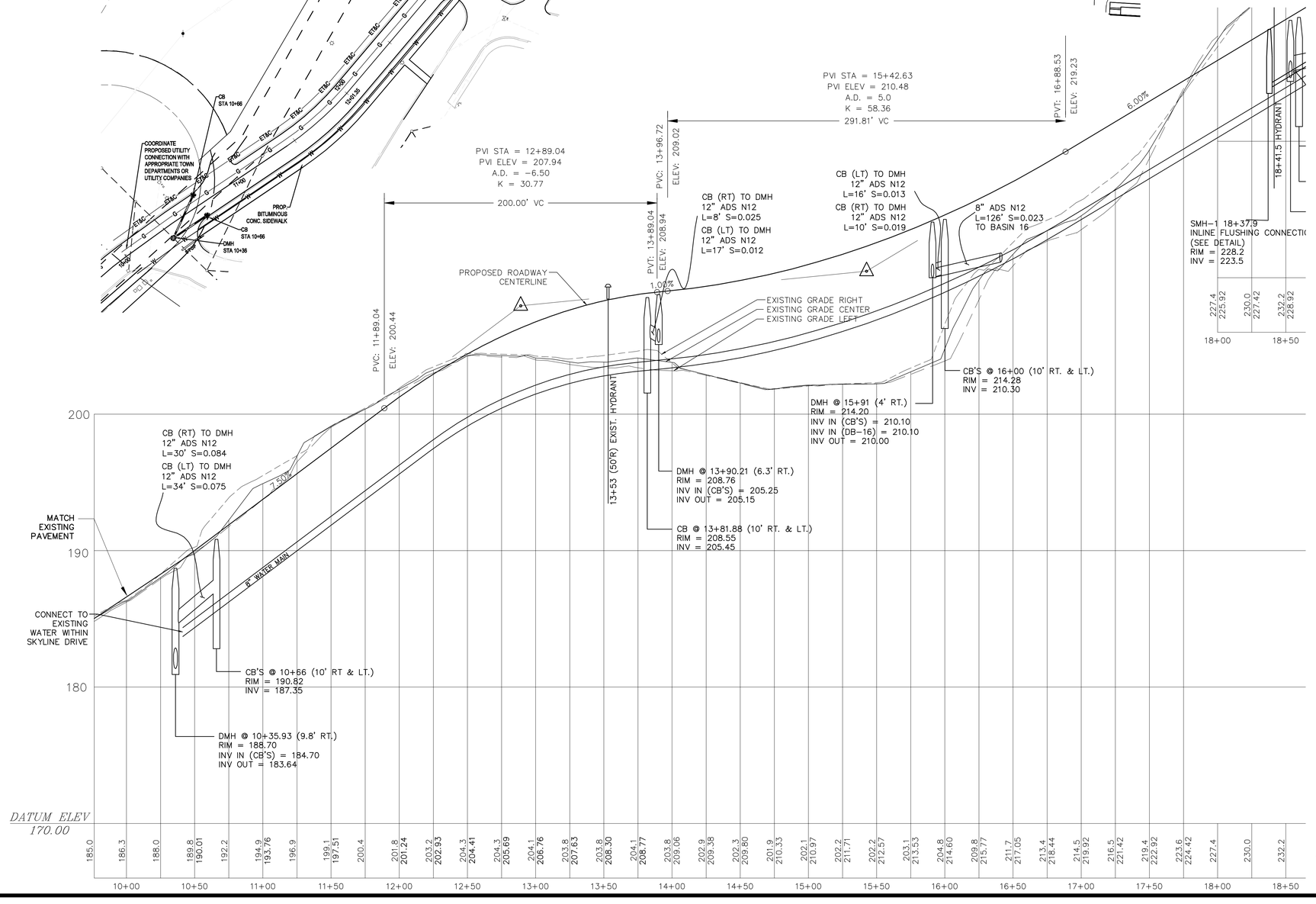

NOTE:
LOW PRESSURE SEWER FORCE MAIN SIZES AND THE LOCATIONS OF FLUSHING CONNECTIONS ARE APPROXIMATE AND SHALL BE COORDINATED WITH MANUFACTURER

P:\11\W111022\DWG\w111022as1.dwg, 21-Profile A, 4/23/2010, 10:17:14 AM, jpinkiewicz, Xerox5510.pc3, User534, c9.9999999

BOHLER ENGINEERING

CIVIL & CONSULTING ENGINEERS
SURVEYORS
PROJECT MANAGERS
ENVIRONMENTAL CONSULTANTS
LANDSCAPE ARCHITECTS

CORPORATE OFFICE:
◆ WARREN, NJ
OFFICES:
◆ SOUTHBOROUGH, MA
◆ BALTIMORE, MD
◆ TOWSON, MD
◆ ALEXANDRIA, VA
◆ ROANOKE/OMA, NY
◆ CENTER VALLEY, PA
◆ CHALFONT, PA
◆ PITTSBURGH, PA
◆ STERLING, VA
◆ HARRISBURG, PA
◆ FORT LAUDERDALE, FL
◆ TAMPA, FL

THESE DRAWINGS ARE THE PROPERTY OF BOHLER ENGINEERING AND ARE NOT TO BE USED IN WHOLE OR IN PART FOR ANY OTHER PROJECT WITHOUT THE EXPRESS WRITTEN PERMISSION FROM BOHLER ENGINEERING. ONLY APPROVED, SIGNED AND SEALED PLANS SHALL BE CLASSED ON CONSTRUCTION DRAWINGS. © 2009 BOHLER ENGINEERING

REVISIONS

REV	DATE	COMMENT	BY
1	07-06-2011	CON-COM SUBMISSION	JAB
2			
3			
4			
5			
6			
7			
8			
9			

THE FOLLOWING STATES REQUIRE NOTIFICATION BY EXCAVATORS, DESIGNERS, OR ANY PERSON PREPARING TO DISTURB THE EARTHS SURFACE ANYWHERE IN THE STATE.
(MA, ME, NH, RI, VT 1-888-344-7233)
(CT 1-800-922-4455)
(NY 1-800-962-7962)

NOT APPROVED FOR CONSTRUCTION

PROJECT No.:	W111022
DRAWN BY:	CFD
CHECKED BY:	JAB/SPD
DATE:	05/23/2011
SCALE:	AS NOTED
CAD I.D.:	w111022as1

PROJECT:

SITE PLAN

FOR

Pulte Homes

THE RESIDENCES AT QUAIL RIDGE

LOCATION OF SITE
354 B GREAT ROAD & SKYLINE DR.
TOWN OF ACTON
MIDDLESEX COUNTY, MA

BOHLER ENGINEERING
352 TURNPIKE ROAD
SOUTHBOROUGH, MA 01772
Phone: (508) 480-9900
Fax: (508) 480-9080
www.BohlerEngineering.com

S.P. DECOURSEY

PROFESSIONAL ENGINEER
MASSACHUSETTS LICENSE No. 36424
NEW HAMPSHIRE LICENSE No. 9308
MAINE LICENSE No. 8408
VERMONT LICENSE No. 7110
CONNECTICUT LICENSE No. 23982
RHODE ISLAND LICENSE No. 7990

SHEET TITLE:

SKYLINE DRIVE PROFILE "A"

SHEET NUMBER:

21
OF 37

REV 0 - 05/23/2011

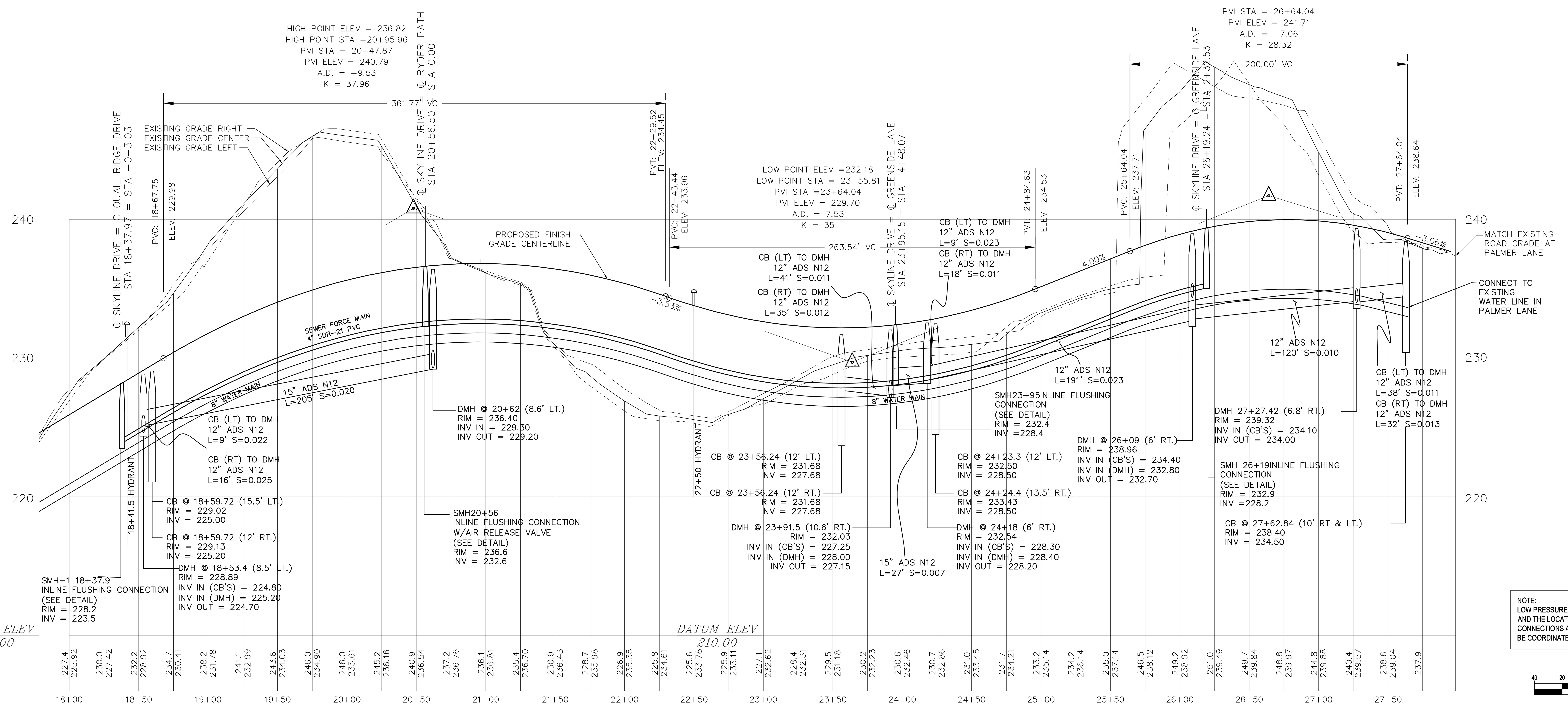

NOTE:
LOW PRESSURE SEWER FORCE MAIN SIZES AND THE LOCATIONS OF FLUSHING CONNECTIONS ARE APPROXIMATE AND SHALL BE COORDINATED WITH MANUFACTURER

40 20 10 0 40
1"= 40'

BOHLER ENGINEERING

CIVIL & CONSULTING ENGINEERS
SURVEYORS
PROJECT MANAGERS
ENVIRONMENTAL CONSULTANTS
LANDSCAPE ARCHITECTS

CORPORATE OFFICE:
♦ WARREN, NJ
OFFICES:
♦ SOUTHBOROUGH, MA ♦ CHALFONT, PA
♦ BOWIE, MD ♦ PHILADELPHIA, PA
♦ TOWSON, MD ♦ STERLING, VA
♦ ALBANY, NY ♦ WARRENTON, VA
♦ RONKONKOMA, NY ♦ FORT LAUDERDALE, FL
♦ CENTER VALLEY, PA ♦ TAMPA, FL

THE INFORMATION, DESIGN AND CONTENT OF THIS PLAN ARE PROPRIETARY AND SHALL NOT BE COPIED OR USED FOR ANY PURPOSE WITHOUT PRIOR WRITTEN AUTHORIZATION FROM BOHLER ENGINEERING. ONLY APPROVED, SIGNED AND SEALED PLANS SHALL BE UTILIZED FOR CONSTRUCTION PURPOSES © 2008 BOHLER ENGINEERING.

REVISIONS

REV	DATE	COMMENT	BY
1	07-06-2011	CON-COM SUBMISSION	JAB
2			
3			
4			
5			
6			
7			
8			
9			

STOP - CALL BEFORE YOU DIG!

THE FOLLOWING STATES REQUIRE NOTIFICATION BY EXCAVATORS, DESIGNERS, OR ANY PERSON PREPARING TO DISTURB THE EARTH'S SURFACE ANYWHERE IN THE STATE.
(MA, ME, NH, RI, VT 1-888-344-7233)
(CT 1-800-922-4455)
(NY 1-800-962-7962)

NOT APPROVED FOR CONSTRUCTION

PROJECT No.:	W111022
DRAWN BY:	CFD
CHECKED BY:	JAB/SPD
DATE:	05/23/2011
SCALE:	AS NOTED
CAD I.D.:	w111022ss1

PROJECT:

SITE PLAN

FOR

Pulte Homes

THE RESIDENCES AT QUAIL RIDGE

LOCATION OF SITE
354 B GREAT ROAD & SKYLINE DR.
TOWN OF ACTON
MIDDLESEX COUNTY, MA

BOHLER ENGINEERING
352 TURNPIKE ROAD
SOUTHBOROUGH, MA 01772
Phone: (508) 480-9900
Fax: (508) 480-9080
www.BohlerEngineering.com

S.P. DECOURSEY
PROFESSIONAL ENGINEER
MASSACHUSETTS LICENSE No. 36424
NEW HAMPSHIRE LICENSE No. 9308
MAINE LICENSE No. 8408
VERMONT LICENSE No. 7110
CONNECTICUT LICENSE No. 23862
RHODE ISLAND LICENSE No. 7990

SHEET TITLE:

SKYLINE DRIVE PROFILE "B"

SHEET NUMBER:
22
OF 37

REV 0 - 05/23/2011

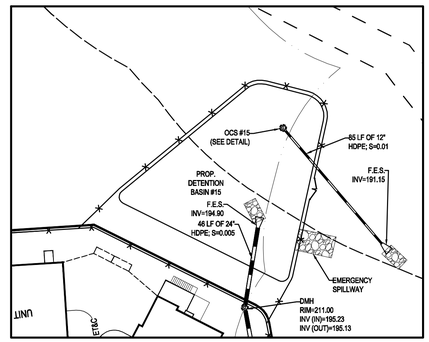

INSET OF BASIN

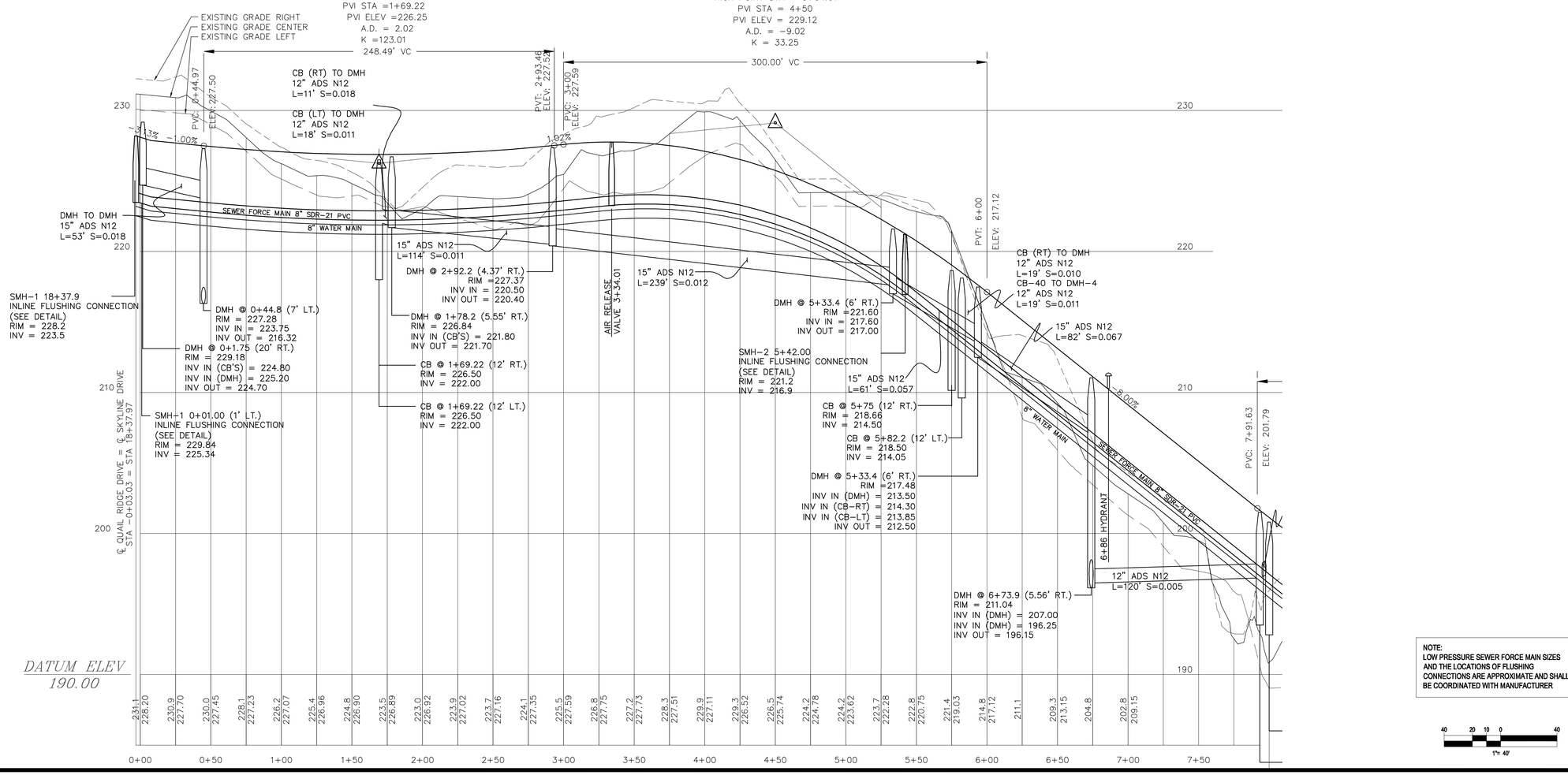

NOTE:
LOW PRESSURE SEWER FORCE MAIN SIZES AND THE LOCATIONS OF FLUSHING CONNECTIONS ARE APPROXIMATE AND SHALL BE COORDINATED WITH MANUFACTURER

40 20 10 0 40
1"= 40'

BOHLER ENGINEERING

CIVIL & CONSULTING ENGINEERS
SURVEYORS
PROJECT MANAGERS
ENVIRONMENTAL CONSULTANTS
LANDSCAPE ARCHITECTS

CORPORATE OFFICE:
◆ WARREN, NJ
OFFICES:
◆ SOUTHBOROUGH, MA
◆ ALBANY, NY
◆ TOWSON, MD
◆ PITTSBURGH, PA
◆ ROANOKE/OMA, NY
◆ CENTER VALLEY, PA
◆ CHALFONT, PA
◆ NEW BRITAIN, PA
◆ STERLING, VA
◆ PRINCETON, NJ
◆ FORT LAUDERDALE, FL
◆ TAMPA, FL

THESE PLANS AND DESIGNS ARE THE PROPERTY OF BOHLER ENGINEERING AND ARE NOT TO BE USED IN WHOLE OR IN PART FOR ANY PROJECT OTHER THAN THE ONE FOR WHICH THEY ARE PREPARED AND PROVIDED BY BOHLER ENGINEERING. ANY UNAUTHORIZED USE, REUSE, OR MODIFICATION OF THESE PLANS AND DESIGNS WITHOUT THE WRITTEN AUTHORIZATION OF BOHLER ENGINEERING SHALL BE UNLAWFUL AND VOID AND SHALL BE CAUSE FOR ACTION AGAINST THE USER. BY USING ANY OF THESE PLANS AND DESIGNS, THE USER AGREES TO INDEMNIFY AND HOLD HARMLESS BOHLER ENGINEERING FROM AND AGAINST ANY AND ALL LOSS, DAMAGE, AND LIABILITY ARISING FROM SUCH USE, REUSE, OR MODIFICATION.

REVISIONS

REV	DATE	COMMENT	BY
1	07-06-2011	CON-COM SUBMISSION	JAB
2			
3			
4			
5			
6			
7			
8			
9			

THE FOLLOWING STATES REQUIRE NOTIFICATION BY EXCAVATORS, DESIGNERS, OR ANY PERSON PREPARING TO DISTURB THE EARTH'S SURFACE ANYWHERE IN THE STATE.
(MA, ME, NH, RI, VT 1-888-344-7233)
(CT 1-800-922-4455)
(NY 1-800-962-7962)

NOT APPROVED FOR CONSTRUCTION

PROJECT No.:	W111022
DRAWN BY:	CFD
CHECKED BY:	JAB/SPD
DATE:	05/23/2011
SCALE:	AS NOTED
CAD I.D.:	w111022ss1

PROJECT:

SITE PLAN

FOR

Pulte HOMES

THE RESIDENCES AT QUAIL RIDGE

LOCATION OF SITE
354 B GREAT ROAD & SKYLINE DR.
TOWN OF ACTON
MIDDLESEX COUNTY, MA

BOHLER ENGINEERING
352 TURNPIKE ROAD
SOUTHBOROUGH, MA 01772
Phone: (508) 480-0900
Fax: (508) 480-9080
www.BohlerEngineering.com

S.P. DECOURSEY
PROFESSIONAL ENGINEER
MASSACHUSETTS LICENSE No. 36424
NEW HAMPSHIRE LICENSE No. 9308
MAINE LICENSE No. 8408
VERMONT LICENSE No. 7110
CONNECTICUT LICENSE No. 23882
RHODE ISLAND LICENSE No. 7990

SHEET TITLE:

QUAIL RIDGE DRIVE PROFILE "A"

SHEET NUMBER:

23
OF 37

REV 0 - 05/23/2011

P:\111W\111022\DWG\w111022ss1.dwg, 23-Profile C, 6/23/2010, 1:51:13 AM, jordanowitz, Xerox5535-1.pc3, User3/4, 1.0.999999

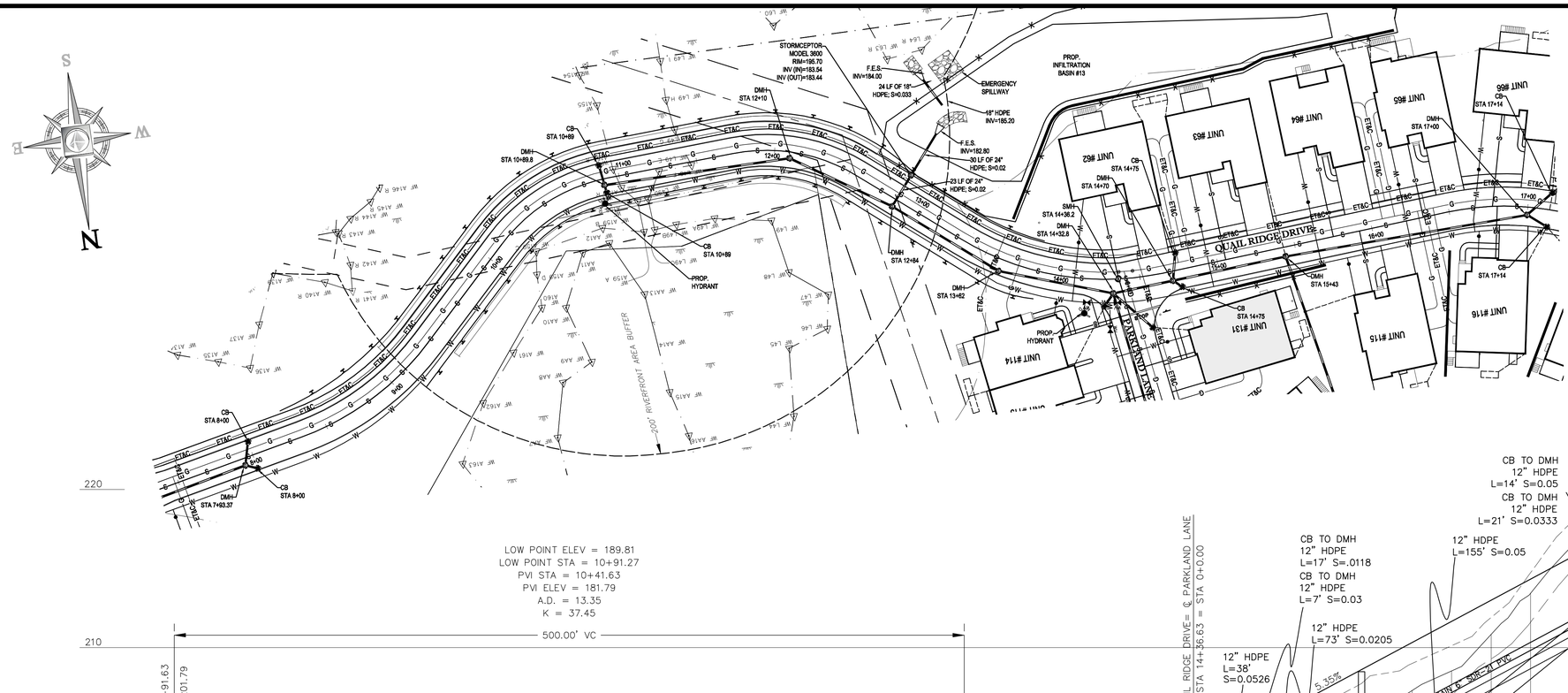

NOTE:
LOW PRESSURE SEWER FORCE MAIN SIZES AND THE LOCATIONS OF FLUSHING CONNECTIONS ARE APPROXIMATE AND SHALL BE COORDINATED WITH MANUFACTURER

40 20 10 0 40
1"= 40'

BOHLER ENGINEERING

CIVIL & CONSULTING ENGINEERS
SURVEYORS
PROJECT MANAGERS
ENVIRONMENTAL CONSULTANTS
LANDSCAPE ARCHITECTS

CORPORATE OFFICE:
◆ WARREN, NJ
OFFICES:
◆ SOUTHBOROUGH, MA
◆ ALBANY, NY
◆ TOWSON, MD
◆ ALLENTOWN, PA
◆ ROMONCOMA, NY
◆ CENTER VALLEY, PA
◆ CHALFONT, PA
◆ PHILADELPHIA, PA
◆ STERLING, VA
◆ MANASSAS, VA
◆ FORT LAUDERDALE, FL
◆ TAMPA, FL

THESE PLANS ARE THE PROPERTY OF BOHLER ENGINEERING AND ARE NOT TO BE USED IN WHOLE OR IN PART FOR ANY OTHER PROJECT WITHOUT THE EXPRESS WRITTEN CONSENT OF BOHLER ENGINEERING. ONLY APPROVED, SIGNED AND SEALED PLANS SHALL BE UTILIZED FOR CONSTRUCTION PURPOSES. © 2009 BOHLER ENGINEERING

REVISIONS

REV	DATE	COMMENT	BY
1	07-06-2011	CON-COM SUBMISSION	JAB
2			
3			
4			
5			
6			
7			
8			
9			

THE FOLLOWING STATES REQUIRE NOTIFICATION BY EXCAVATORS, DESIGNERS, OR ANY PERSON PREPARING TO DISTURB THE EARTH'S SURFACE ANYWHERE IN THE STATE.
(MA, ME, NH, RI, VT 1-888-344-7233)
(CT 1-800-922-4455)
(NY 1-800-962-7962)

NOT APPROVED FOR CONSTRUCTION

PROJECT No.:	W111022
DRAWN BY:	CFD
CHECKED BY:	JAB/SPD
DATE:	05/23/2011
SCALE:	AS NOTED
CAD I.D.:	w111022ss1

PROJECT:

SITE PLAN

FOR

Pulte

THE RESIDENCES AT QUAIL RIDGE

LOCATION OF SITE
354 B GREAT ROAD & SKYLINE DR.
TOWN OF ACTON
MIDDLESEX COUNTY, MA

BOHLER ENGINEERING
352 TURNPIKE ROAD
SOUTHBOROUGH, MA 01772
Phone: (508) 480-9900
Fax: (508) 480-9080
www.BohlerEngineering.com

S.P. DECOURSEY
PROFESSIONAL ENGINEER
MASSACHUSETTS LICENSE No. 35424
NEW HAMPSHIRE LICENSE No. 9308
MAINE LICENSE No. 8408
VERMONT LICENSE No. 7110
CONNECTICUT LICENSE No. 23862
RHODE ISLAND LICENSE No. 7990

SHEET TITLE:

QUAIL RIDGE DRIVE PROFILE "B"

SHEET NUMBER:
24
OF 37

REV 0 - 05/23/2011

P:\111W\111022\DWG\w111022ss1.dwg, 24-Profile D, 4/23/2010, 1:07:14 AM, jsanlawrence, Xerox3315 (ps3), User3/4, 1.6.9999999

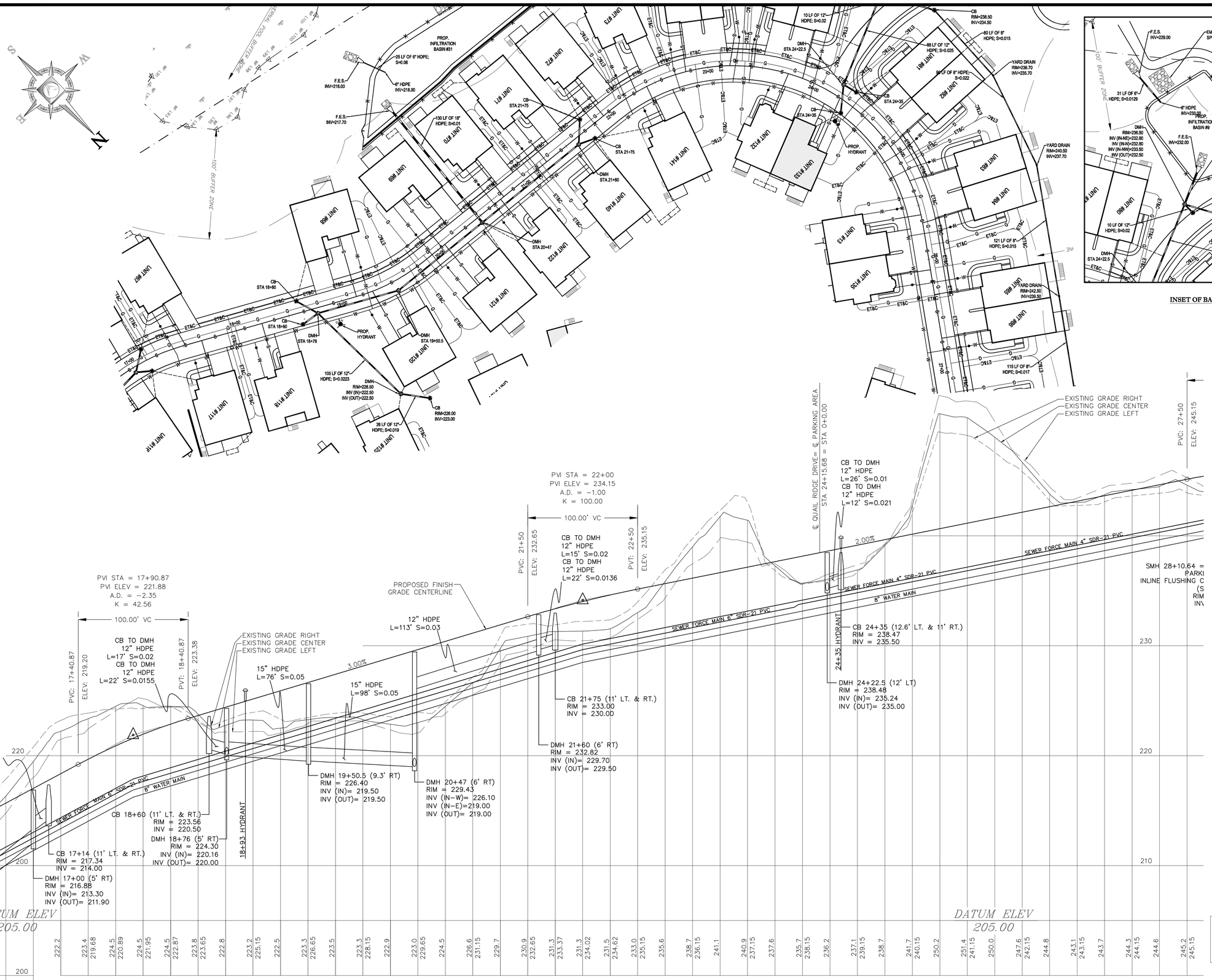

INSET OF BASIN

NOTE:
LOW PRESSURE SEWER FORCE MAIN SIZES AND THE LOCATIONS OF FLUSHING CONNECTIONS ARE APPROXIMATE AND SHALL BE COORDINATED WITH MANUFACTURER

BOHLER ENGINEERING

CIVIL & CONSULTING ENGINEERS
SURVEYORS
PROJECT MANAGERS
ENVIRONMENTAL CONSULTANTS
LANDSCAPE ARCHITECTS

CORPORATE OFFICE:
◆ WARREN, NJ
OFFICES:
◆ SOUTHBOROUGH, MA
◆ PHILADELPHIA, PA
◆ TOWSON, MD
◆ STERLING, VA
◆ LANCASTER, PA
◆ ALPHARETTA, GA
◆ ROHNOKOMA, NY
◆ FORT LAUDERDALE, FL
◆ CENTER VALLEY, PA
◆ TAMPA, FL

THESE PLANS ARE THE PROPERTY OF BOHLER ENGINEERING AND ARE NOT TO BE USED IN WHOLE OR IN PART FOR ANY OTHER PROJECT WITHOUT THE EXPRESS WRITTEN CONSENT OF BOHLER ENGINEERING. ONLY APPROVED, SIGNED AND SEALED PLANS SHALL BE UTILIZED FOR CONSTRUCTION PURPOSES. © 2010 BOHLER ENGINEERING

REVISIONS

REV	DATE	COMMENT	BY
1	07-06-2011	CON-COM SUBMISSION	JAB
2			
3			
4			
5			
6			
7			
8			
9			

THE FOLLOWING STATES REQUIRE NOTIFICATION BY EXCAVATORS, DESIGNERS, OR ANY PERSON PREPARING TO DISTURB THE EARTH'S SURFACE ANYWHERE IN THE STATE.
(MA, ME, NH, RI, VT 1-888-344-7233)
(CT 1-800-922-4455)
(NY 1-800-962-7962)

NOT APPROVED FOR CONSTRUCTION

PROJECT No.:	W111022
DRAWN BY:	CFD
CHECKED BY:	JAB/SPD
DATE:	05/23/2011
SCALE:	AS NOTED
CAD I.D.:	w111022ss1

PROJECT:

SITE PLAN

FOR

Pulte Homes

THE RESIDENCES AT QUAIL RIDGE

LOCATION OF SITE
354 B GREAT ROAD & SKYLINE DR.
TOWN OF ACTON
MIDDLESEX COUNTY, MA

BOHLER ENGINEERING
352 TURNPIKE ROAD
SOUTHBOROUGH, MA 01772
Phone: (508) 480-9900
Fax: (508) 480-9080
www.BohlerEngineering.com

S.P. DECOURSEY
PROFESSIONAL ENGINEER
MASSACHUSETTS LICENSE No. 36424
NEW HAMPSHIRE LICENSE No. 9308
MAINE LICENSE No. 8408
VERMONT LICENSE No. 7110
CONNECTICUT LICENSE No. 23882
RHODE ISLAND LICENSE No. 7990

SHEET TITLE:

QUAIL RIDGE DRIVE PROFILE "C"

SHEET NUMBER:

25
OF 37

REV 0 - 05/23/2011

P:\111\W111022\DWG\w111022ss1.dwg, 24-Profile E, 4/23/2010, 10:17:14 AM, joedamonico, Xref-2010-3.xref, Use434, 1.0999999"

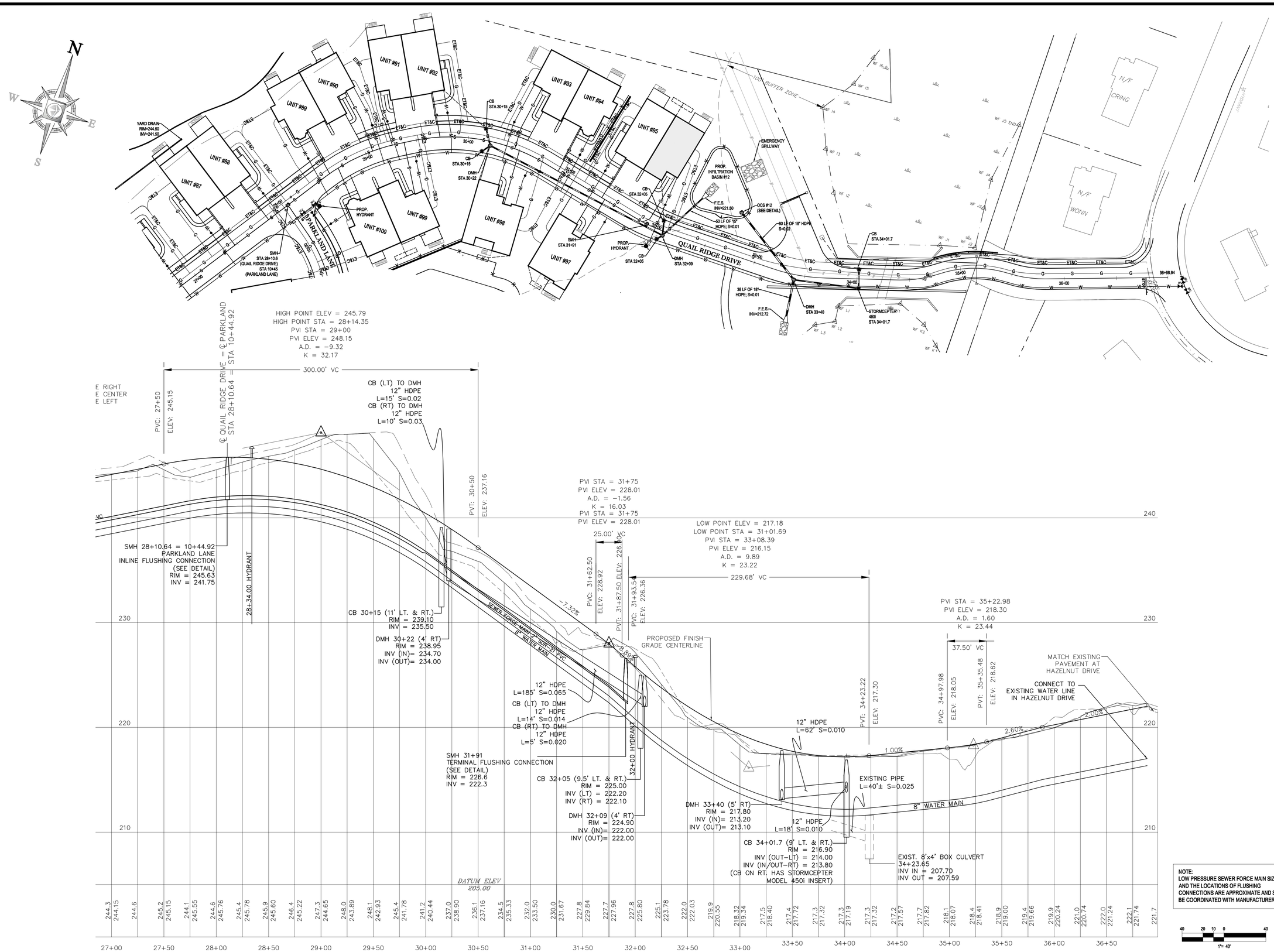

NOTE:
LOW PRESSURE SEWER FORCE MAIN SIZES AND THE LOCATIONS OF FLUSHING CONNECTIONS ARE APPROXIMATE AND SHALL BE COORDINATED WITH MANUFACTURER

BOHLER ENGINEERING

CIVIL & CONSULTING ENGINEERS
SURVEYORS
PROJECT MANAGERS
ENVIRONMENTAL CONSULTANTS
LANDSCAPE ARCHITECTS

CORPORATE OFFICE:
◆ WARREN, NJ
OFFICES:
◆ SOUTHBOROUGH, MA
◆ BALTIMORE, MD
◆ TOWSON, MD
◆ LANCASTER, PA
◆ ROHNOCOMA, NY
◆ CENTER VALLEY, PA
◆ CHALFONT, PA
◆ PHILADELPHIA, PA
◆ STERLING, VA
◆ RICHMOND, VA
◆ FORT LAUDERDALE, FL
◆ TAMPA, FL

THESE PLANS ARE THE PROPERTY OF BOHLER ENGINEERING AND ARE NOT TO BE USED IN WHOLE OR IN PART FOR ANY OTHER PROJECT WITHOUT THE EXPRESS WRITTEN CONSENT OF BOHLER ENGINEERING. ONLY APPROVED, SIGNED AND SEALED PLANS SHALL BE UTILIZED FOR CONSTRUCTION PURPOSES. © 2009 BOHLER ENGINEERING

REVISIONS

REV	DATE	COMMENT	BY
1	07-06-2011	CON-COM SUBMISSION	JAB
2			
3			
4			
5			
6			
7			
8			
9			

THE FOLLOWING STATES REQUIRE NOTIFICATION BY EXCAVATORS, DESIGNERS, OR ANY PERSON PREPARING TO DISTURB THE EARTH'S SURFACE ANYWHERE IN THE STATE.
(MA, ME, NH, RI, VT 1-888-344-7233)
(CT 1-800-922-4455)
(NY 1-800-962-7962)

NOT APPROVED FOR CONSTRUCTION

PROJECT No.:	W111022
DRAWN BY:	CFD
CHECKED BY:	JAB/SPD
DATE:	05/23/2011
SCALE:	AS NOTED
CAD I.D.:	w111022ss1

PROJECT:

SITE PLAN

FOR

Pulte HOMES

THE RESIDENCES AT QUAIL RIDGE

LOCATION OF SITE
354 B GREAT ROAD & SKYLINE DR.
TOWN OF ACTON
MIDDLESEX COUNTY, MA

BOHLER ENGINEERING
352 TURNPIKE ROAD
SOUTHBOROUGH, MA 01772
Phone: (508) 480-9900
Fax: (508) 480-9080
www.BohlerEngineering.com

S.P. DECOURSEY
PROFESSIONAL ENGINEER
MASSACHUSETTS LICENSE No. 36424
NEW HAMPSHIRE LICENSE No. 9308
MAINE LICENSE No. 8408
VERMONT LICENSE No. 7110
CONNECTICUT LICENSE No. 23982
RHODE ISLAND LICENSE No. 7990

SHEET TITLE:

QUAIL RIDGE DRIVE PROFILE "D"

SHEET NUMBER:
26
OF 37

REV 0 - 05/23/2011

P:\111W\111022\DWG\w111022ss1.dwg, 24x36 Profile F, 4/22/2010, 10:17:14 AM, jordanweiss, Xerox5510-1ps3, 1 User34, 1.0999999%

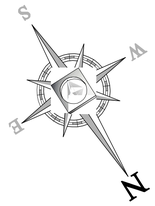

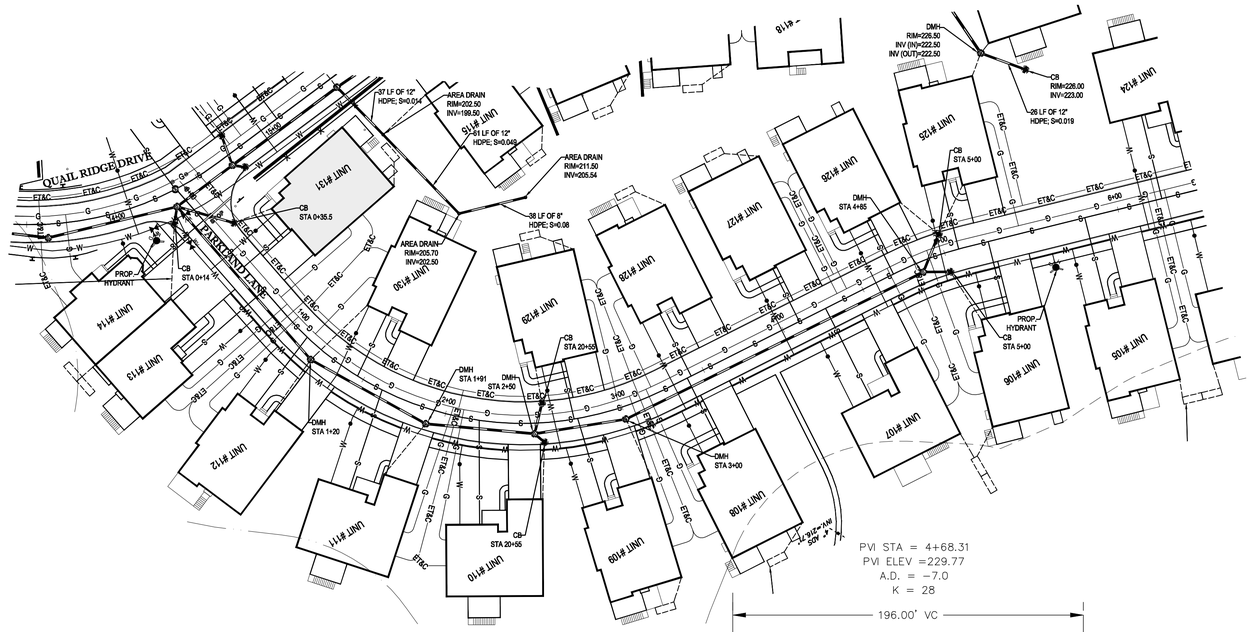

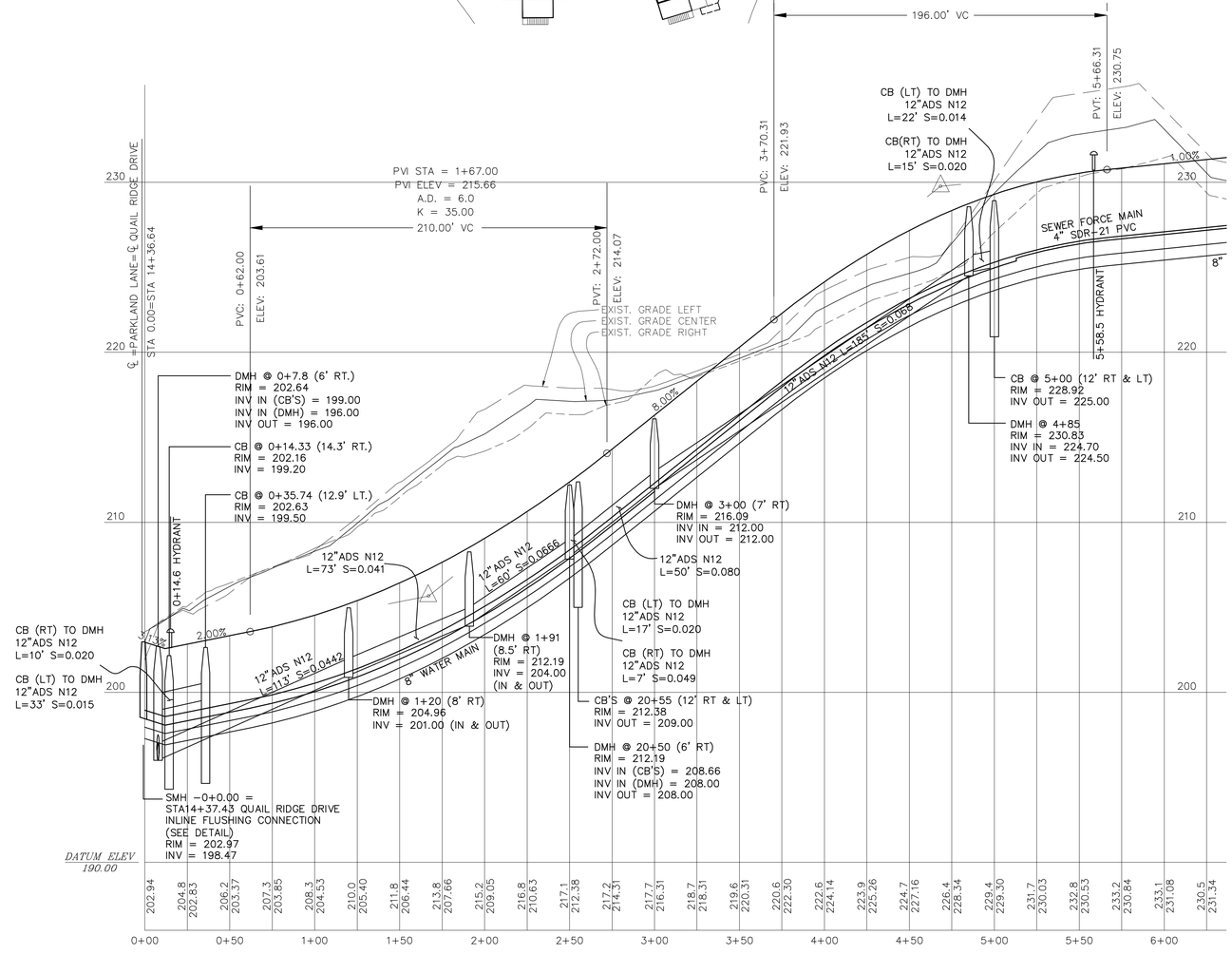

NOTE:
LOW PRESSURE SEWER FORCE MAIN SIZES AND THE LOCATIONS OF FLUSHING CONNECTIONS ARE APPROXIMATE AND SHALL BE COORDINATED WITH MANUFACTURER

40 20 10 0 40
1"= 40'

BOHLER ENGINEERING

CIVIL & CONSULTING ENGINEERS
SURVEYORS
PROJECT MANAGERS
ENVIRONMENTAL CONSULTANTS
LANDSCAPE ARCHITECTS

CORPORATE OFFICE:
◆ WARREN, NJ
OFFICES:
◆ SOUTHBOROUGH, MA
◆ BOSTON, MA
◆ TOWSON, MD
◆ LAUREL, MD
◆ RICHMOND/OMAHA, NY
◆ CENTERVALLEY, PA
◆ CHALFONT, PA
◆ ALBANY, NY
◆ STERLING, VA
◆ MANASSAS, VA
◆ FORT LAUDERDALE, FL
◆ TAMPA, FL

THESE PLANS ARE THE PROPERTY OF BOHLER ENGINEERING AND ARE NOT TO BE USED IN WHOLE OR IN PART FOR ANY OTHER PROJECT WITHOUT THE EXPRESS WRITTEN CONSENT OF BOHLER ENGINEERING. ONLY AUTHORIZED SIGNED AND SEALED PLANS SHALL BE UTILIZED FOR CONSTRUCTION PURPOSES. © 2009 BOHLER ENGINEERING

REVISIONS

REV	DATE	COMMENT	BY
1	07-06-2011	CON-COM SUBMISSION	JAB
2			
3			
4			
5			
6			
7			
8			
9			

THE FOLLOWING STATES REQUIRE NOTIFICATION BY EXCAVATORS, DESIGNERS, OR ANY PERSON PREPARING TO DISTURB THE EARTH'S SURFACE ANYWHERE IN THE STATE.
(MA, ME, NH, RI, VT 1-888-344-7233)
(CT 1-800-922-4455)
(NY 1-800-962-7962)

NOT APPROVED FOR CONSTRUCTION

PROJECT No.:	W111022
DRAWN BY:	CFD
CHECKED BY:	JAB/SPD
DATE:	05/23/2011
SCALE:	AS NOTED
CAD I.D.:	w111022ss1

PROJECT:

SITE PLAN

FOR

THE RESIDENCES AT QUAIL RIDGE

LOCATION OF SITE
354 B GREAT ROAD & SKYLINE DR.
TOWN OF ACTON
MIDDLESEX COUNTY, MA

BOHLER ENGINEERING
352 TURNPIKE ROAD
SOUTHBOROUGH, MA 01772
Phone: (508) 480-9900
Fax: (508) 480-9080
www.BohlerEngineering.com

S.P. DECOURSEY
PROFESSIONAL ENGINEER
MASSACHUSETTS LICENSE No. 38424
NEW HAMPSHIRE LICENSE No. 9308
MAINE LICENSE No. 9408
VERMONT LICENSE No. 7110
CONNECTICUT LICENSE No. 23892
RHODE ISLAND LICENSE No. 7990

SHEET TITLE:

PARKLAND LANE PROFILE "A"

SHEET NUMBER:

27
OF 37

REV 0 - 05/23/2011

P:\111W\111022\CIVIL\dwg\111022ss1.dwg, 27-Profile G, 4/23/2010, 10:17:14 AM, jsordaniecz, Xerox3510 ps3, User34, 1:0.99999997

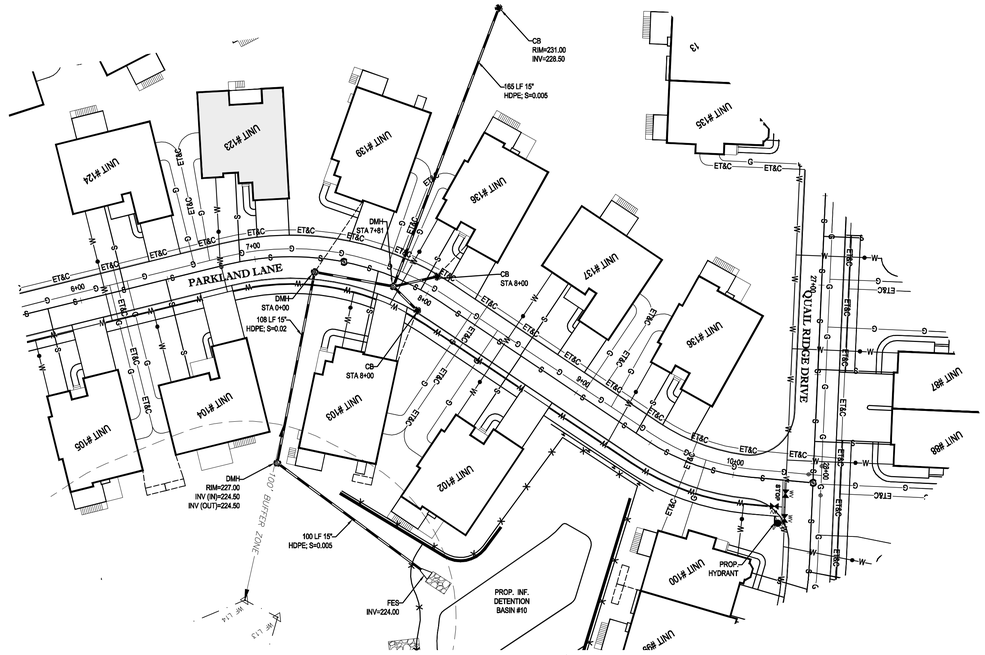

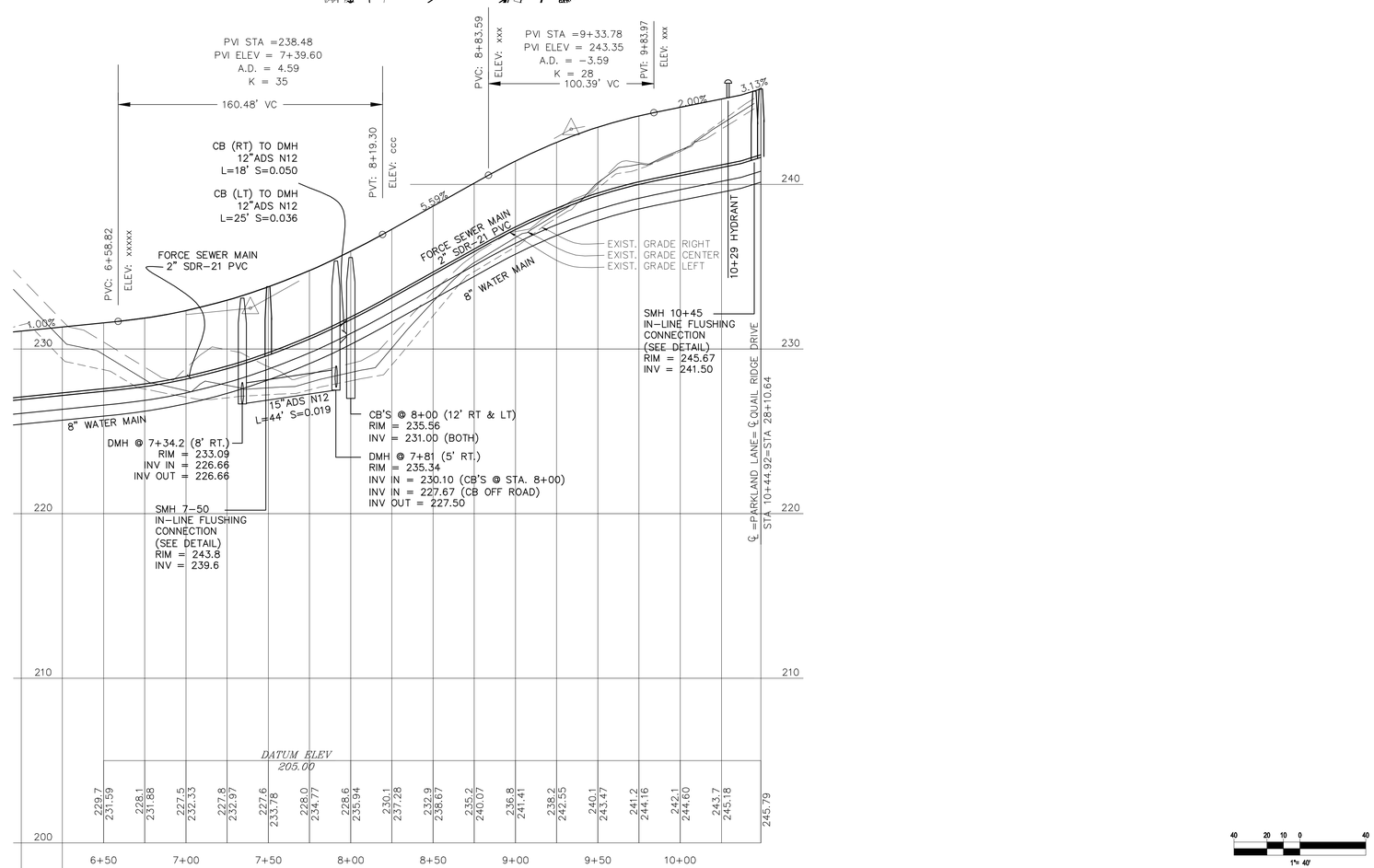

40 20 10 0 40
1"= 40'

BOHLER ENGINEERING

CIVIL & CONSULTING ENGINEERS
SURVEYORS
PROJECT MANAGERS
ENVIRONMENTAL CONSULTANTS
LANDSCAPE ARCHITECTS

CORPORATE OFFICE:
◆ WARREN, NJ

OFFICES:
◆ SOUTHBOROUGH, MA
◆ BALTIMORE, MD
◆ TOWSON, MD
◆ LANHAM, MD
◆ ROMONCOMA, NY
◆ CENTER VALLEY, PA
◆ CHALFONT, PA
◆ ALLENTOWN, PA
◆ STERLING, VA
◆ HIGHLANDS RANCH, CO
◆ FORT LAUDERDALE, FL
◆ TAMPA, FL

THESE PLANS AND DESIGNS ARE COPYRIGHTED BY BOHLER ENGINEERING AND SHALL REMAIN THE PROPERTY OF BOHLER ENGINEERING. NO REPRODUCTION OR USE OF THESE PLANS AND DESIGNS SHALL BE MADE WITHOUT PRIOR WRITTEN AUTHORIZATION FROM BOHLER ENGINEERING. ONLY APPROVED, SIGNED AND SEALED PLANS SHALL BE CONSIDERED TO BE CONSTRUCTION DOCUMENTS. © 2009 BOHLER ENGINEERING

REVISIONS

REV	DATE	COMMENT	BY
1	07-06-2011	CON-COM SUBMISSION	JAB
2			
3			
4			
5			
6			
7			
8			
9			

THE FOLLOWING STATES REQUIRE NOTIFICATION BY EXCAVATORS, DESIGNERS, OR ANY PERSON PREPARING TO DISTURB THE EARTH'S SURFACE ANYWHERE IN THE STATE.
(MA, ME, NH, RI, VT 1-888-344-7233)
(CT 1-800-922-4455)
(NY 1-800-962-7962)

NOT APPROVED FOR CONSTRUCTION

PROJECT No.:	W111022
DRAWN BY:	CFD
CHECKED BY:	JAB/SPD
DATE:	05/23/2011
SCALE:	AS NOTED
CAD I.D.:	w111022ss1

PROJECT:

SITE PLAN

FOR

Pulte

THE RESIDENCES AT QUAIL RIDGE

LOCATION OF SITE
354 B GREAT ROAD & SKYLINE DR.
TOWN OF ACTON
MIDDLESEX COUNTY, MA

BOHLER ENGINEERING
352 TURNPIKE ROAD
SOUTHBOROUGH, MA 01772
Phone: (508) 480-9900
Fax: (508) 480-9080
www.BohlerEngineering.com

S.P. DECOURSEY
PROFESSIONAL ENGINEER
MASSACHUSETTS LICENSE No. 39424
NEW HAMPSHIRE LICENSE No. 9308
MAINE LICENSE No. 8408
VERMONT LICENSE No. 7110
CONNECTICUT LICENSE No. 23862
RHODE ISLAND LICENSE No. 7990

SHEET TITLE:

PARKLAND LANE PROFILE "B"

SHEET NUMBER:

28
OF 37

REV 0 - 05/23/2011

P:\111\W111022\DWG\w111022ss1.dwg, 28-Profile Ht, 4/23/2010, 10:71:14 AM, jsarkisowicz, XeroCS135.ctb, User54, 1:0.99999997

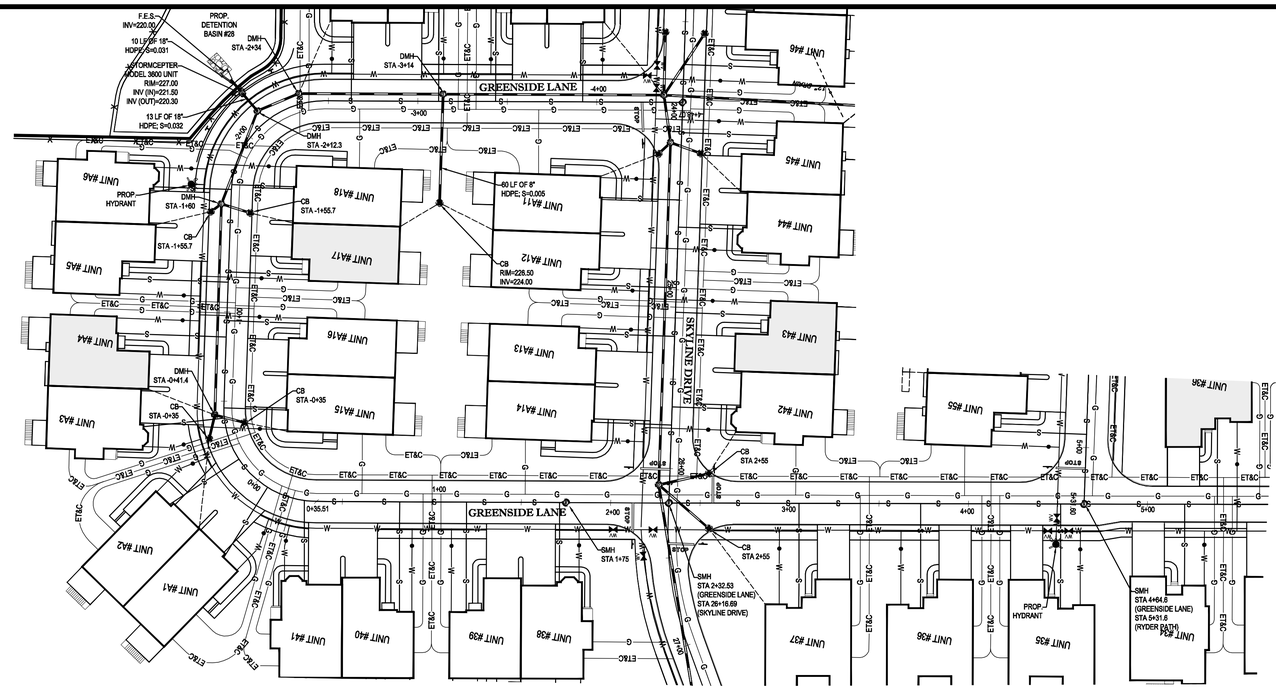

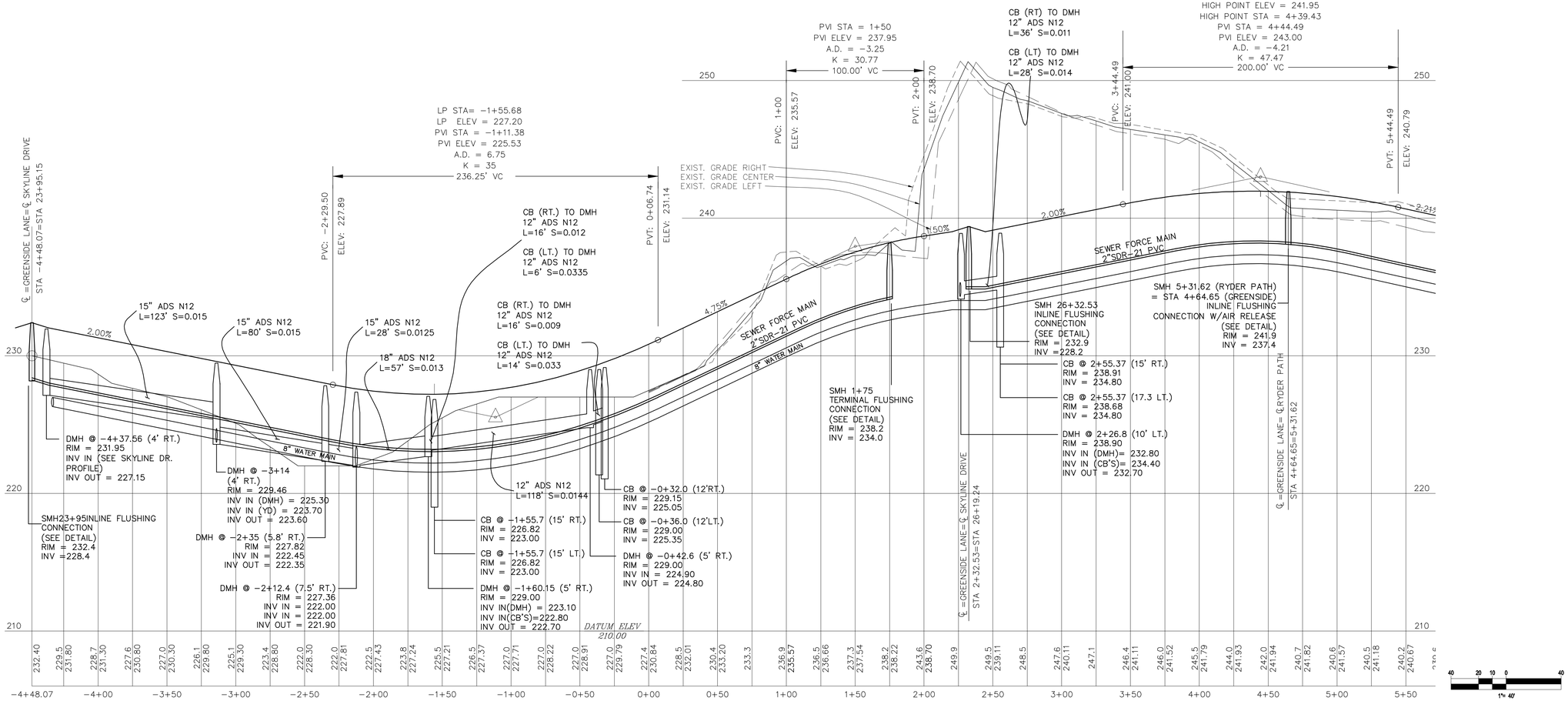

BOHLER ENGINEERING

CIVIL & CONSULTING ENGINEERS
SURVEYORS
PROJECT MANAGERS
ENVIRONMENTAL CONSULTANTS
LANDSCAPE ARCHITECTS

CORPORATE OFFICE:
◆ WARREN, NJ
OFFICES:
◆ SOUTHBOROUGH, MA
◆ EXTON, PA
◆ TOWSON, MD
◆ LATHAM, NY
◆ ROANOKE/CMA, NY
◆ CENTER VALLEY, PA
◆ CHALFONT, PA
◆ PITTSBURGH, PA
◆ STERLING, VA
◆ RICHMOND, VA
◆ FORT LAUDERDALE, FL
◆ TAMPA, FL

THE SUBMITTAL OF THESE PLANS ELECTRONICALLY IS FOR THE CONVENIENCE OF REVIEW ONLY. ONLY PAPER COPIES SIGNED AND SEALED BY A LICENSED PROFESSIONAL ENGINEER SHALL BE CONSIDERED OFFICIAL AND BINDING. BOHLER ENGINEERING ASSUMES NO RESPONSIBILITY FOR CHANGES MADE TO THESE PLANS OTHER THAN THOSE MADE BY OUR FIRM. ANY AND ALL CHANGES MADE BY OTHERS WILL VOID ALL WARRANTIES. IN ACCEPTING THESE PLANS IN ELECTRONIC FORM, YOU AGREE TO INDEMNIFY AND HOLD HARMLESS BOHLER ENGINEERING FROM ANY AND ALL LIABILITY ARISING FROM THE USE OF THESE PLANS BY YOU OR ANY OTHER PARTY. IF YOU DO NOT AGREE TO THESE TERMS, RETURN THESE PLANS IMMEDIATELY. © 2011 BOHLER ENGINEERING

REVISIONS

REV	DATE	COMMENT	BY
1	07-06-2011	CON-COM SUBMISSION	JAB
2			
3			
4			
5			
6			
7			
8			
9			

THE FOLLOWING STATES REQUIRE NOTIFICATION BY EXCAVATORS, DESIGNERS, OR ANY PERSON PREPARING TO DISTURB THE EARTH'S SURFACE ANYWHERE IN THE STATE.
(MA, ME, NH, RI, VT 1-888-344-7233)
(CT 1-800-922-4455)
(NY 1-800-962-7962)

NOT APPROVED FOR CONSTRUCTION

PROJECT No.:	W111022
DRAWN BY:	CFD
CHECKED BY:	JAB/SPD
DATE:	05/23/2011
SCALE:	AS NOTED
CAD I.D.:	w111022ss1

PROJECT:

SITE PLAN

FOR

Pulte Homes

THE RESIDENCES AT QUAIL RIDGE

LOCATION OF SITE
354 B GREAT ROAD & SKYLINE DR.
TOWN OF ACTON
MIDDLESEX COUNTY, MA

BOHLER ENGINEERING
352 TURNPIKE ROAD
SOUTHBOROUGH, MA 01772
Phone: (508) 480-9900
Fax: (508) 480-9080
www.BohlerEngineering.com

S.P. DECOURSEY
PROFESSIONAL ENGINEER
MASSACHUSETTS LICENSE No. 36424
NEW HAMPSHIRE LICENSE No. 9908
MAINE LICENSE No. 9408
VERMONT LICENSE No. 7110
CONNECTICUT LICENSE No. 23982
RHODE ISLAND LICENSE No. 7990

SHEET TITLE:

GREENSIDE LANE PROFILE "A"

SHEET NUMBER:

29
OF 37

REV 0 - 05/23/2011

P:\111\W111022\DWG\w111022ss1.dwg, 29-Profile 1, 4/22/2010, 10:21:14 AM, joankaworecz, Xerox5316-1.prf3, User34, 0.99999997

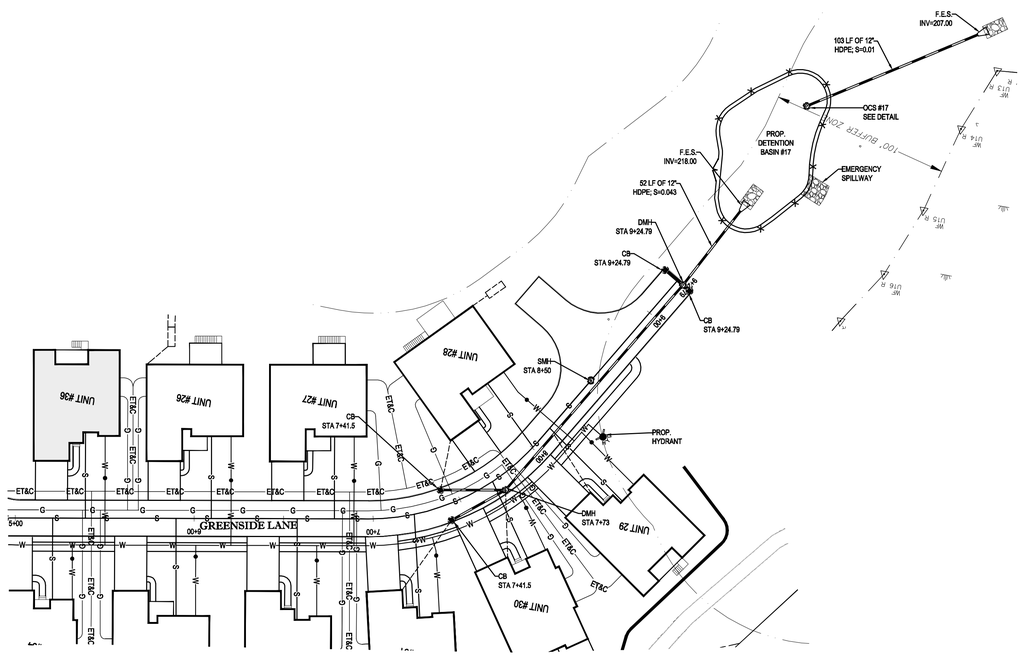

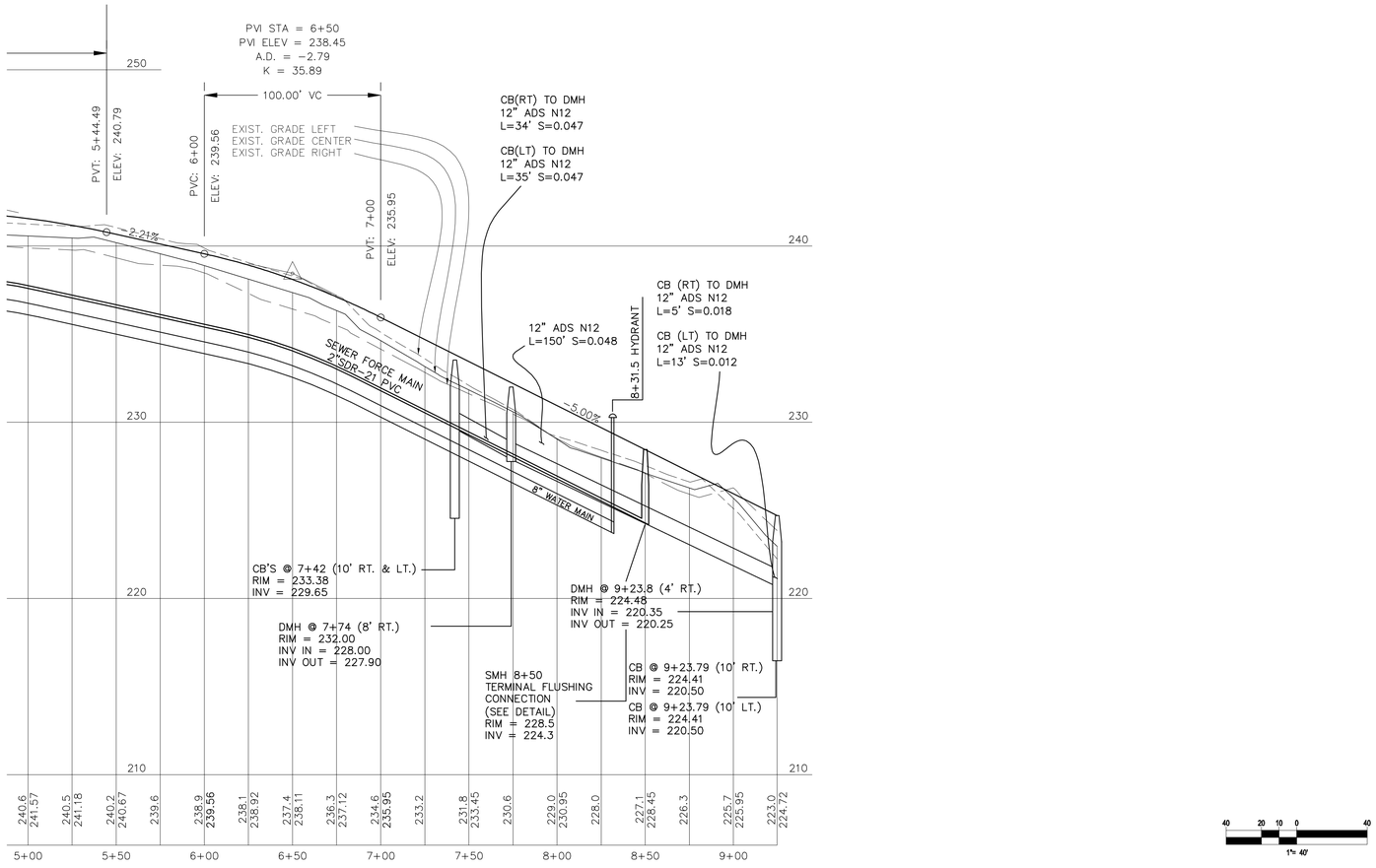

BOHLER ENGINEERING

CIVIL & CONSULTING ENGINEERS
SURVEYORS
PROJECT MANAGERS
ENVIRONMENTAL CONSULTANTS
LANDSCAPE ARCHITECTS

CORPORATE OFFICE:
◆ WARREN, NJ
OFFICES:
◆ SOUTHBOROUGH, MA
◆ NEW YORK, NY
◆ TOWSON, MD
◆ LAUREL, MD
◆ RICHMOND/OMAHA, NY
◆ CENTER VALLEY, PA
◆ CHALFONT, PA
◆ HARRISBURG, PA
◆ STERLING, VA
◆ WILLIAMSBURG, VA
◆ FORT LAUDERDALE, FL
◆ TAMPA, FL
◆ ORLANDO, FL

THE INFORMATION CONTAINED IN THIS DRAWING IS THE SOLE PROPERTY OF BOHLER ENGINEERING. ANY REPRODUCTION IN PART OR AS A WHOLE WITHOUT THE WRITTEN PERMISSION OF BOHLER ENGINEERING IS PROHIBITED. ANY USE OF THESE PLANS AND SPECIFICATIONS FOR ANY PROJECT OTHER THAN THE PROJECT FOR WHICH THEY WERE PREPARED, ANY ALTERATIONS, REVISIONS OR ADDITIONS TO THESE PLANS AND SPECIFICATIONS, OR ANY REUSE OF THESE PLANS AND SPECIFICATIONS WITHOUT WRITTEN VERIFICATION OR ADAPTATION BY BOHLER ENGINEERING SHALL BE AT THE USER'S SOLE RISK AND WITHOUT LIABILITY OR LEGAL EXPOSURE TO BOHLER ENGINEERING; AND THE USER SHALL INDEMNIFY AND HOLD HARMLESS BOHLER ENGINEERING FROM ALL CLAIMS, DAMAGES, LOSSES AND EXPENSES ARISING OUT OF OR RESULTING THEREFROM. © 2009 BOHLER ENGINEERING

REVISIONS

REV	DATE	COMMENT	BY
1	07-06-2011	CON-COM SUBMISSION	JAB
2			
3			
4			
5			
6			
7			
8			
9			

THE FOLLOWING STATES REQUIRE NOTIFICATION BY EXCAVATORS, DESIGNERS, OR ANY PERSON PREPARING TO DISTURB THE EARTH'S SURFACE ANYWHERE IN THE STATE.
(MA, ME, NH, RI, VT 1-888-344-7233)
(CT 1-800-922-4455)
(NY 1-800-962-7962)

NOT APPROVED FOR CONSTRUCTION

PROJECT No.:	W111022
DRAWN BY:	CFD
CHECKED BY:	JAB/SPD
DATE:	05/23/2011
SCALE:	AS NOTED
CAD I.D.:	w111022ss1

PROJECT:

SITE PLAN

FOR

Pulte

THE RESIDENCES AT QUAIL RIDGE

LOCATION OF SITE
354 B GREAT ROAD & SKYLINE DR.
TOWN OF ACTON
MIDDLESEX COUNTY, MA

BOHLER ENGINEERING
352 TURNPIKE ROAD
SOUTHBOROUGH, MA 01772
Phone: (508) 480-9900
Fax: (508) 480-9080
www.BohlerEngineering.com

S.P. DECOURSEY
PROFESSIONAL ENGINEER
MASSACHUSETTS LICENSE No. 39424
NEW HAMPSHIRE LICENSE No. 9308
MAINE LICENSE No. 8408
VERMONT LICENSE No. 7110
CONNECTICUT LICENSE No. 23962
RHODE ISLAND LICENSE No. 7990

SHEET TITLE:

GREENSIDE LANE PROFILE "B"

SHEET NUMBER:

30
OF 37

REV 0 - 05/23/2011

P:\111W\11-022\DWG\w111022ss1.dwg, 30-Profile], 6/23/2010 10:17:14 AM, jordanwolz, Xref-3015-1.dwl3, Xref-34-1.dwl3, 1.0

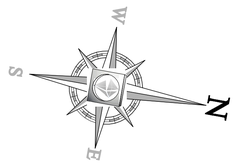

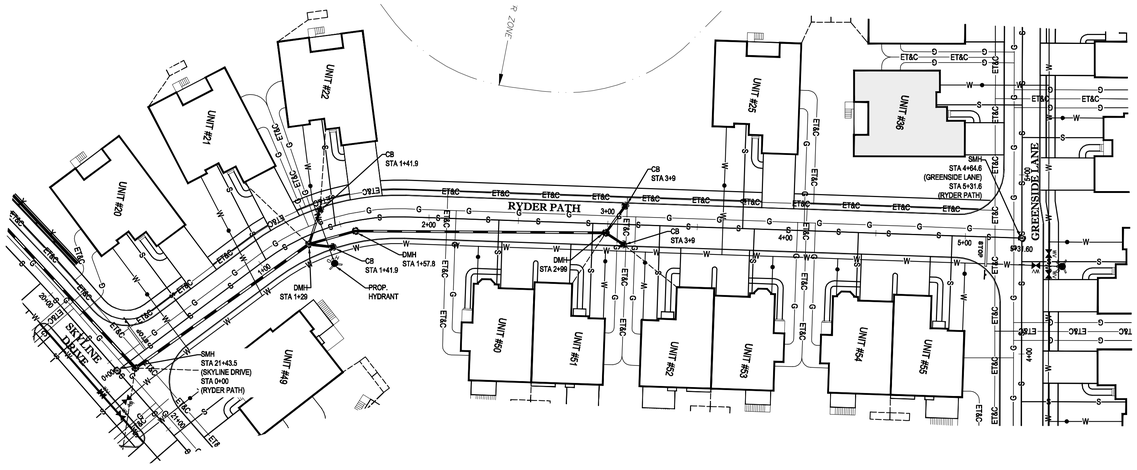

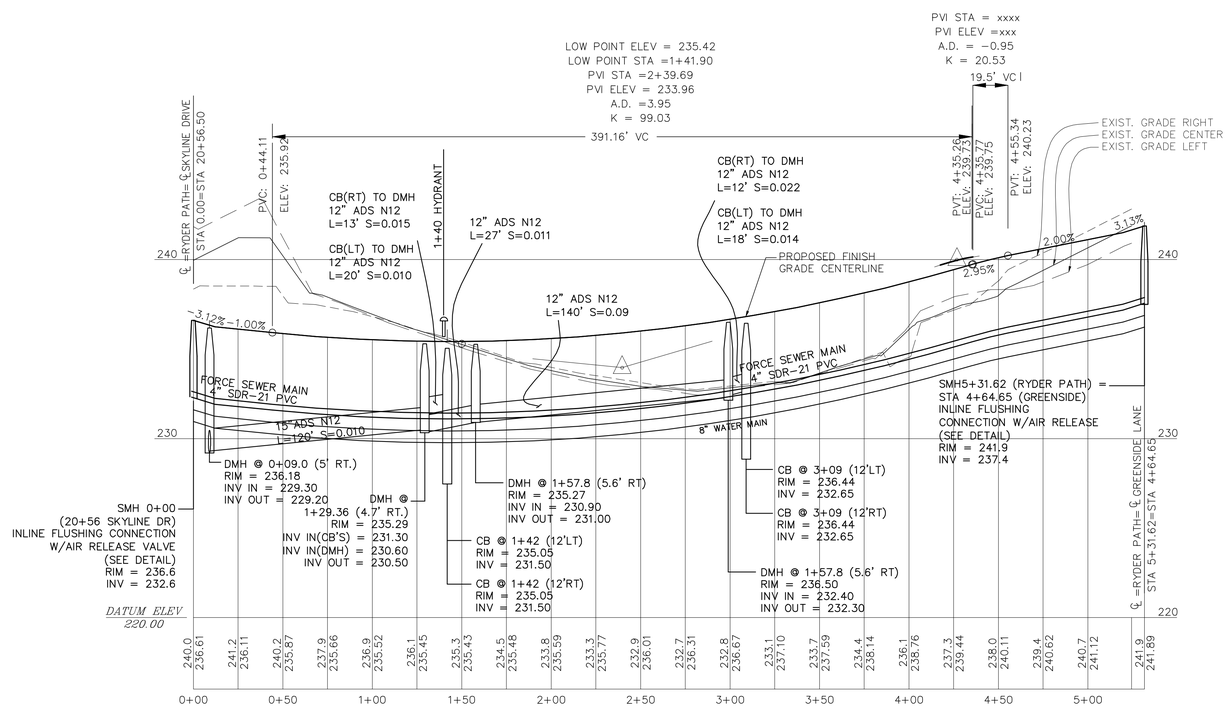

40 20 10 0 40
1"= 40'

THE INFORMATION CONTAINED IN THIS DRAWING IS THE SOLE PROPERTY OF BOHLER ENGINEERING. ANY REPRODUCTION IN PART OR AS A WHOLE WITHOUT THE WRITTEN PERMISSION OF BOHLER ENGINEERING IS PROHIBITED. ANY USE OF THIS PLAN FOR CONSTRUCTION PURPOSES PRIOR TO THE ISSUANCE OF A FINAL APPROVAL LETTER AND BUILDING PERMIT, AS APPROVED BY ALL LOCAL AND STATE AGENCIES, WILL BE AT THE USERS SOLE RISK AND WITHOUT LIABILITY TO BOHLER ENGINEERING. ONLY APPROVED, SIGNED AND SEALED PLANS SHALL BE CONSTRUCTED/RELEASED FOR CONSTRUCTION.

BOHLER ENGINEERING

CIVIL & CONSULTING ENGINEERS
SURVEYORS
PROJECT MANAGERS
ENVIRONMENTAL CONSULTANTS
LANDSCAPE ARCHITECTS

CORPORATE OFFICE:
◆ WARREN, NJ

OFFICES:
◆ SOUTHBOROUGH, MA
◆ BOHEMIA, NY
◆ TOWSON, MD
◆ LAFAYETTE, LA
◆ RICHMOND/OMAHA, NY
◆ CENTER VALLEY, PA
◆ CHALFONT, PA
◆ ALLENTOWN, PA
◆ STERLING, VA
◆ WASHINGTON, VA
◆ FORT LAUDERDALE, FL
◆ TAMPA, FL

REVISIONS

REV	DATE	COMMENT	BY
1	07-06-2011	CON-COM SUBMISSION	JAB
2			
3			
4			
5			
6			
7			
8			
9			

THE FOLLOWING STATES REQUIRE NOTIFICATION BY EXCAVATORS, DESIGNERS, OR ANY PERSON PREPARING TO DISTURB THE EARTH'S SURFACE ANYWHERE IN THE STATE.
(MA, ME, NH, RI, VT 1-888-344-7233)
(CT 1-800-922-4455)
(NY 1-800-962-7962)

NOT APPROVED FOR CONSTRUCTION

PROJECT No.:	W111022
DRAWN BY:	CFD
CHECKED BY:	JAB/SPD
DATE:	05/23/2011
SCALE:	AS NOTED
CAD I.D.:	w111022ss1

PROJECT:

SITE PLAN

FOR

Pulte Homes

THE RESIDENCES AT QUAIL RIDGE

LOCATION OF SITE
354 B GREAT ROAD & SKYLINE DR.
TOWN OF ACTON
MIDDLESEX COUNTY, MA

BOHLER ENGINEERING
352 TURNPIKE ROAD
SOUTHBOROUGH, MA 01772
Phone: (508) 480-9900
Fax: (508) 480-9080
www.BohlerEngineering.com

S.P. DECOURSEY
PROFESSIONAL ENGINEER
MASSACHUSETTS LICENSE No. 36424
NEW HAMPSHIRE LICENSE No. 9308
MAINE LICENSE No. 9408
VERMONT LICENSE No. 7110
CONNECTICUT LICENSE No. 23982
RHODE ISLAND LICENSE No. 7990

SHEET TITLE:

RYDER PATH PROFILE

SHEET NUMBER:

31
OF 37

REV 0 - 05/23/2011

P:\111\W111022\DWG\w111022ss1.dwg, 31-Profile R, 4/23/2010, 10:17:14 AM, jordanowicz, Xerox3510 ps3, User434, 1:0.99999997

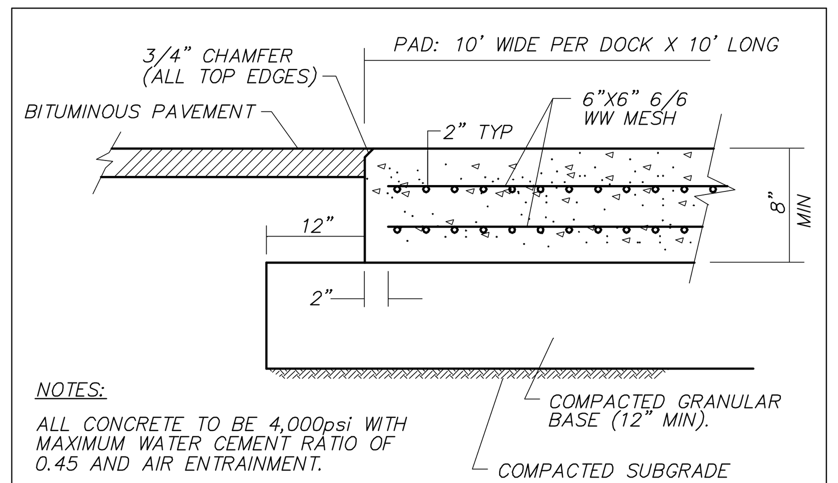

NOTES:

ALL CONCRETE TO BE 4,000psi WITH MAXIMUM WATER CEMENT RATIO OF 0.45 AND AIR ENTRAINMENT.

PAD THICKNESS & DESIGN WILL VARY ACCORDING TO SITE AND SUB-SURFACE CONDITIONS. PAD TO BE DESIGNED BY DEVELOPER'S STRUCTURAL ENGINEER.

DUMPSTER PAD

NOT TO SCALE

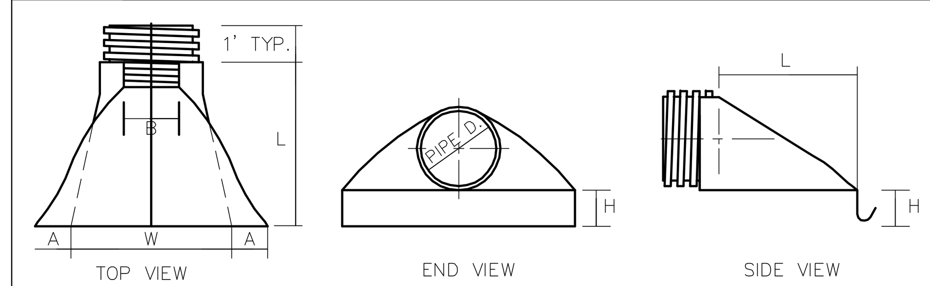

PIPE DIAMETER	DIMENSION (inches)					
	PART NO.	A(1±)	B MAX	H(1±)	L(1/2±)	W(2±)
12" and 15"	1210 NP	6.5	10	6.5	25	29
18"	1810 NP	7.5	15	6.5	32	35
24"	2410 NP	7.5	18	6.5	36	45
36"	3610 NP	10.5	NA	7.0	53	68

ADS END SECTION DIMENSIONS

NOT TO SCALE

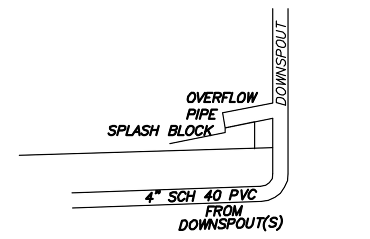

DOWNSPOUT DETAIL

NOT TO SCALE

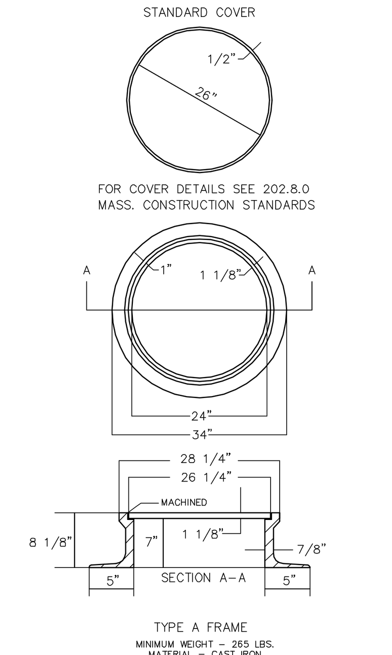

MANHOLE FRAME AND COVER

NOT TO SCALE

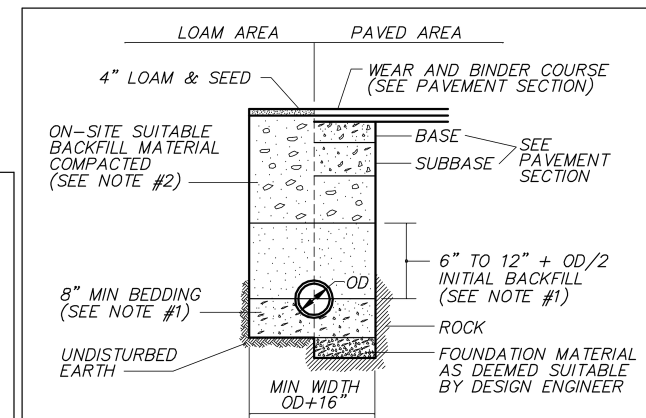

NOTES:

1. 3/4" SCREENED GRAVEL COMPACTED IN 6" MAX LIFTS TO AT LEAST 90% OF STANDARD PROCTOR DENSITY.

3/4" SCREENED GRAVEL REQUIREMENTS:

SIEVE SIZE	% FINER BY WEIGHT
1"	100
3/4"	90 – 100
1/2"	20 – 50
3/8"	0 – 20
# 4	0 – 5

2. BACKFILL MATERIAL, BELOW PAVED OR LOAM AREAS COMPACTED IN 6" MAX LIFTS TO NOT LESS THAN 90% OF STANDARD PROCTOR DENSITY, WITH STONES NO LARGER THAN 8 INCHES.

TYPICAL DRAIN TRENCH DETAIL

NOT TO SCALE

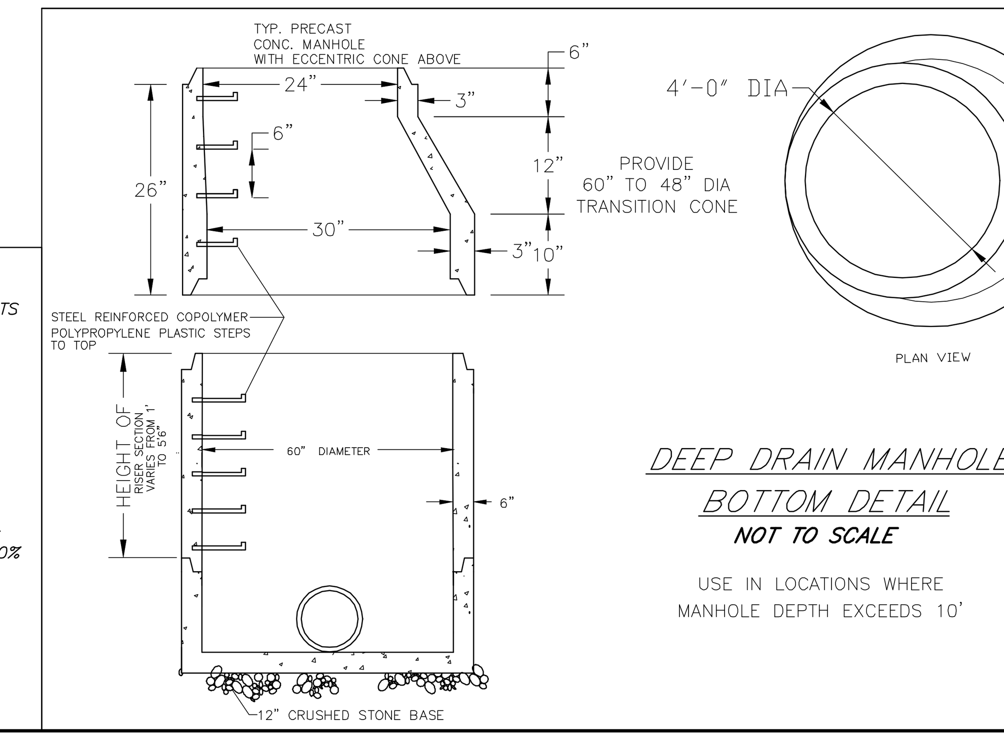

DEEP DRAIN MANHOLE BOTTOM DETAIL

NOT TO SCALE

USE IN LOCATIONS WHERE MANHOLE DEPTH EXCEEDS 10'

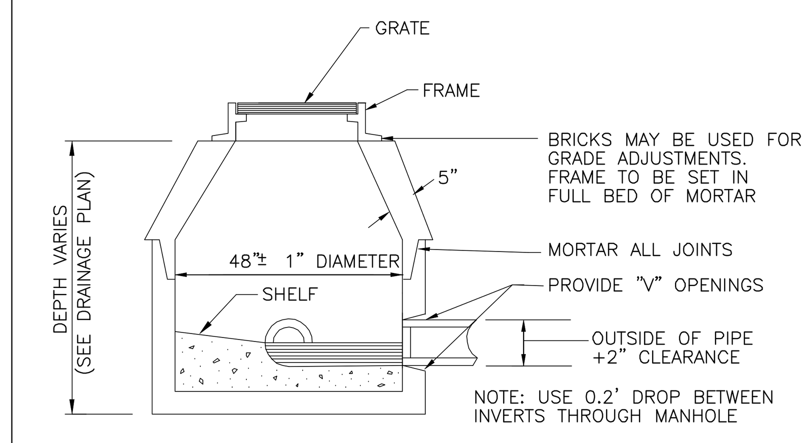

PRECAST CONCRETE MANHOLE

NOT TO SCALE

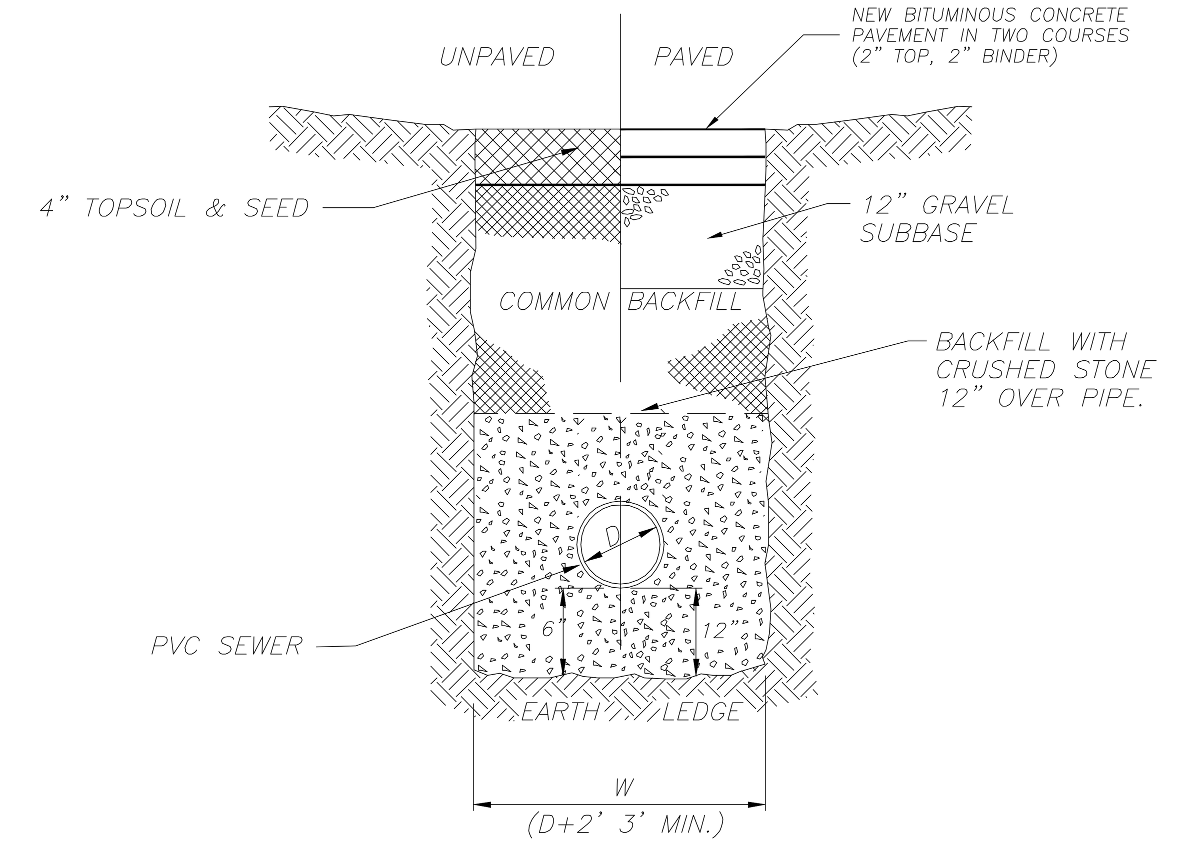

TYP. SANITARY SEWER TRENCH DETAIL

N.T.S.

NOTE: THE CONTRACTOR IS DIRECTED AND RESPONSIBLE TO SLOPE AND/OR SHIELD THE TRENCH EXCAVATION IN ACCORDANCE WITH ALL APPLICABLE OSHA REGULATIONS.

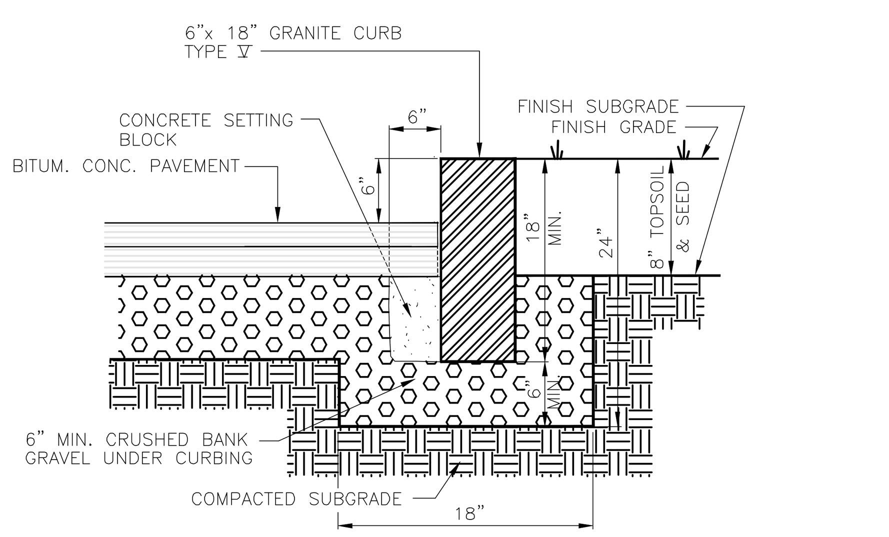

TYPICAL VERTICAL GRANITE CURB

NOT TO SCALE

NOTE:
INSTALL VERTICAL GRANITE CURBING TO BE USED AT CULVERT CROSS, QUAILRIDGE DRIVE STA 9+15 TO STA 12+55 BOTH SIDES

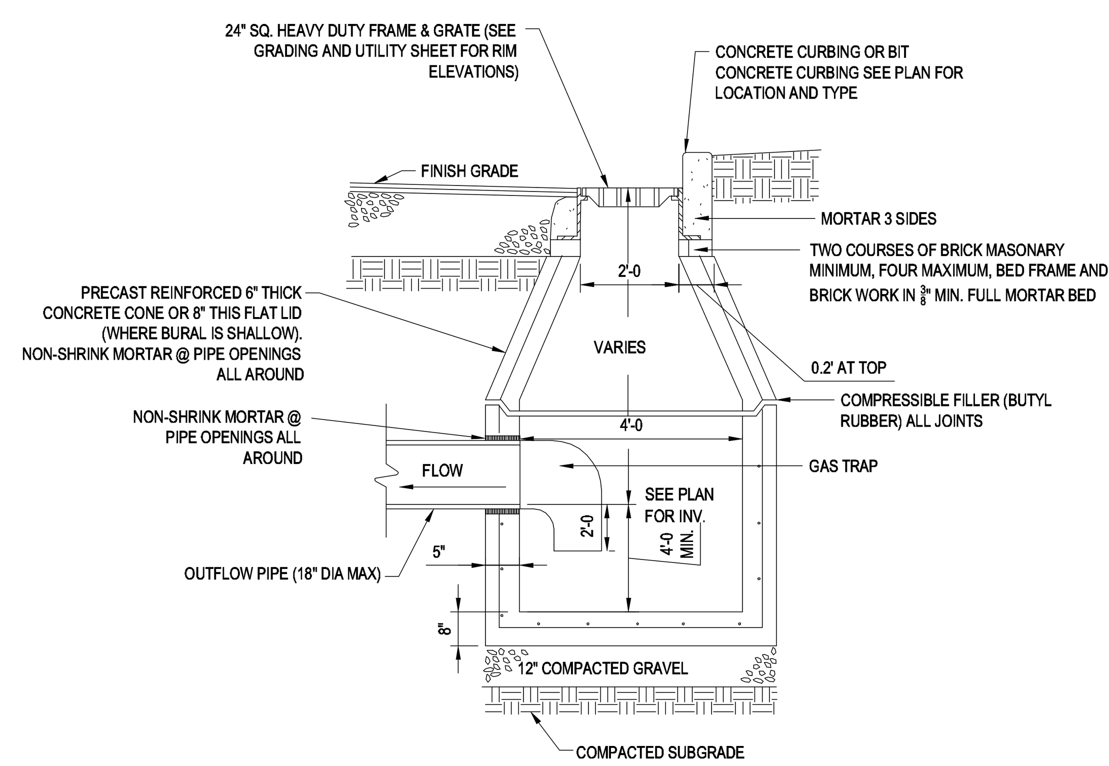

NOTES:
1. ALL STRUCTURES SHALL BE SUITABLE FOR H-20 LOADING AND SHALL MEET THE REQUIREMENTS OF ASTM C478.
2. USE PRECAST FLAT SLAB TOP FOR SHALLOW INVERT APPLICATIONS

PRECAST CONCRETE DEEP SUMP CATCH BASIN

N.T.S.

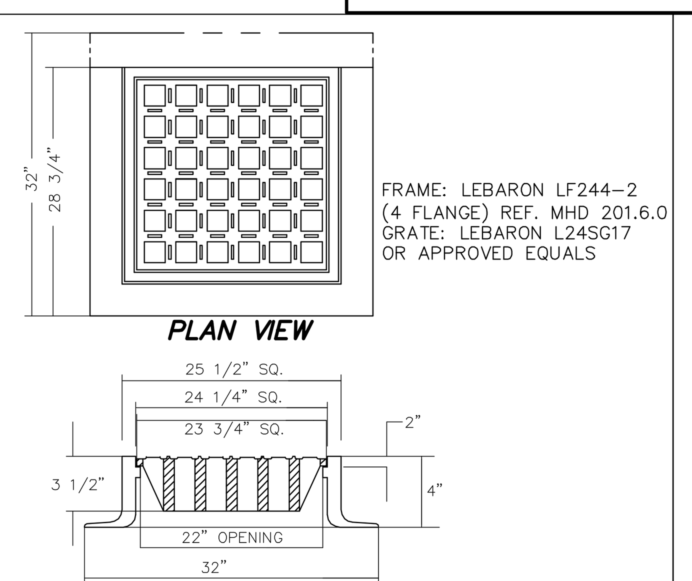

FRAME: LEBARON LF244-2 (4 FLANGE) REF. MHD 201.6.0
GRATE: LEBARON L24SG17
OR APPROVED EQUALS

NOTES
FULLY MACHINED AND INTERCHANGABLE FRAMES AND COVERS.
HIGH QUALITY MATERIALS AND WORKMANSHIP.
COAL TAR EPOXY PAINTED.
NO ROCK COVERS.
H-20 LOADING RATE
WEIGHT OF GRATE: 215 LBS.
WEIGHT OF FRAME: 4 FLANGES – 295 LBS
REFERENCE MHD STANDARD DETAIL 201.6.0

TYPICAL CATCH BASIN FRAME AND GRATE

NOT TO SCALE

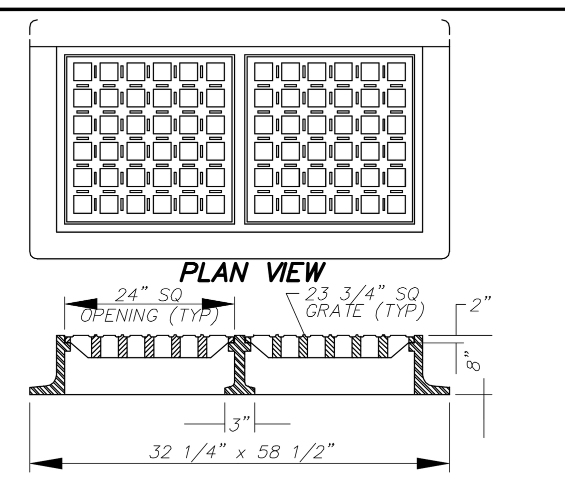

FRAME: LEBARON LV2448-2 GRATE: LEBARON L24SG1 (USE 2 GRATES) OR APPROVED EQUALS

DOUBLE CATCH BASIN

NOTES
FULLY MACHINED AND INTERCHANGABLE FRAMES AND COVERS.
HIGH QUALITY MATERIALS AND WORKMANSHIP.
COAL TAR EPOXY PAINTED.
NO ROCK COVERS.
H-20 LOADING RATE
3 FLANGE FRAMES TO BE USED WITH CURB INLET

DOUBLE CATCH BASIN FRAME

INSTALL AT CB'S @ STA. 10+89 & 10+90 ON QUAIL RIDGE DRIVE

NOT TO SCALE

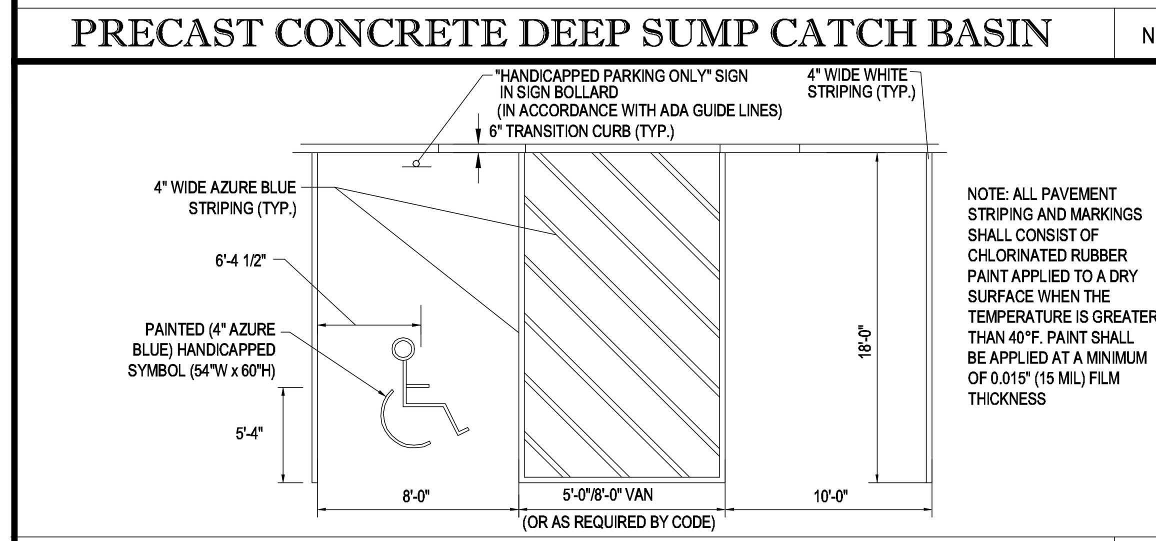

NOTE: ALL PAVEMENT STRIPING AND MARKINGS SHALL CONSIST OF CHLORINATED RUBBER PAINT APPLIED TO A DRY SURFACE WHEN THE TEMPERATURE IS GREATER THAN 40°F. PAINT SHALL BE APPLIED AT A MINIMUM OF 0.015" (15 MIL) FILM THICKNESS

HANDICAPPED STALL MARKINGS & PARKING LOT STRIPING DETAIL

N.T.S.

DISABLED PARKING SIGN
1.) 12"x18", 5' TO BOTTOM OF SYMBOL
2.) LOCATED SO THAT IT CANNOT BE OBSCURED BY A CAR PARKED IN THE SPACE. (2' BEHIND CURB OR 2' BEHIND WALK, AS APPLICABLE)
3.) CONFORM TO LOCAL CODES

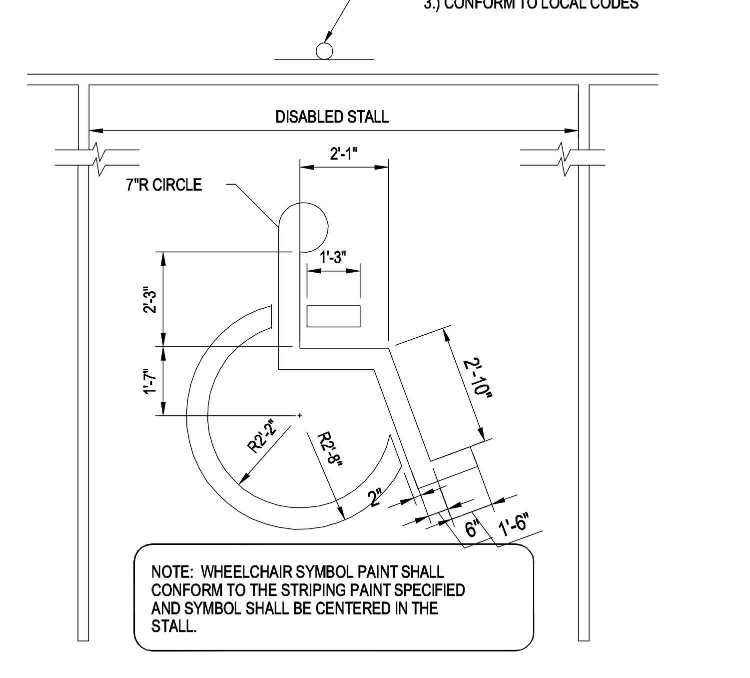

NOTE: WHEELCHAIR SYMBOL PAINT SHALL CONFORM TO THE STRIPING PAINT SPECIFIED AND SYMBOL SHALL BE CENTERED IN THE STALL.

DISABLED SPACE PARKING PAINTING DETAIL

N.T.S.

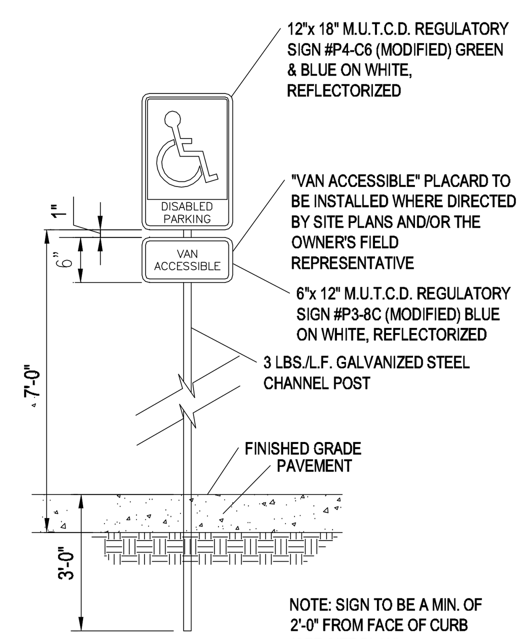

NOTE: SIGN TO BE A MIN. OF 2'-0" FROM FACE OF CURB (SEE SITE PLAN)

'HANDICAP PARKING ONLY' SIGN

N.T.S.

BOHLER ENGINEERING
CORPORATE OFFICE: ♦ WARREN, NJ
OFFICES: ♦ SOUTHBOROUGH, MA ♦ BOWIE, MD ♦ TOWSON, MD ♦ ALBANY, NY ♦ RONKONKOMA, NY ♦ CENTER VALLEY, PA ♦ CHALFONT, PA ♦ PHILADELPHIA, PA ♦ STERLING, VA ♦ WARRENTON, VA ♦ FORT LAUDERDALE, FL ♦ TAMPA, FL
CIVIL & CONSULTING ENGINEERS
SURVEYORS
PROJECT MANAGERS
ENVIRONMENTAL CONSULTANTS
LANDSCAPE ARCHITECTS

THE INFORMATION, DESIGN AND CONTENT OF THIS PLAN ARE PROPRIETARY AND SHALL NOT BE COPIED OR USED FOR ANY PURPOSE WITHOUT PRIOR WRITTEN AUTHORIZATION FROM BOHLER ENGINEERING. ONLY APPROVED, SIGNED AND SEALED PLANS SHALL BE UTILIZED FOR CONSTRUCTION PURPOSES. c 2008 BOHLER ENGINEERING.

REVISIONS

REV	DATE	COMMENT	BY
1	07-06-2011	CON-COM SUBMISSION	JAB
2			
3			
4			
5			
6			
7			
8			
9			

STOP - CALL BEFORE YOU DIG!

THE FOLLOWING STATES REQUIRE NOTIFICATION BY EXCAVATORS, DESIGNERS, OR ANY PERSON PREPARING TO DISTURB THE EARTH'S SURFACE ANYWHERE IN THE STATE.
(MA, ME, NH, RI, VT 1-888-344-7233)
(CT 1-800-922-4455)
(NY 1-800-962-7962)

NOT APPROVED FOR CONSTRUCTION

PROJECT No.:	W111022
DRAWN BY:	CFD
CHECKED BY:	JAB/SPD
DATE:	05/23/2011
SCALE:	AS NOTED
CAD I.D.:	w111022ss1_details

PROJECT:

SITE PLAN

FOR

Pulte Homes

THE RESIDENCES AT QUAIL RIDGE

LOCATION OF SITE
354 B GREAT ROAD & SKYLINE DR.
TOWN OF ACTON
MIDDLESEX COUNTY, MA

BOHLER ENGINEERING
352 TURNPIKE ROAD
SOUTHBOROUGH, MA 01772
Phone: (508) 480-9900
Fax: (508) 480-9080
www.BohlerEngineering.com

S.P. DECOURSEY
PROFESSIONAL ENGINEER
MASSACHUSETTS LICENSE No. 36424
NEW HAMPSHIRE LICENSE No. 9308
MAINE LICENSE No. 8408
VERMONT LICENSE No. 7110
CONNECTICUT LICENSE No. 23862
RHODE ISLAND LICENSE No. 7990

SHEET TITLE:

CONSTRUCTION DETAILS SHEET

SHEET NUMBER:

REV 0 - 05/23/2011

P:\11\W111022\DWG\w111022ss1_details.dwg , 32-Details, 4/23/2010, 10:17:14 AM, jcerkanowicz, XeroX510-1.pc3, User634, 1:1

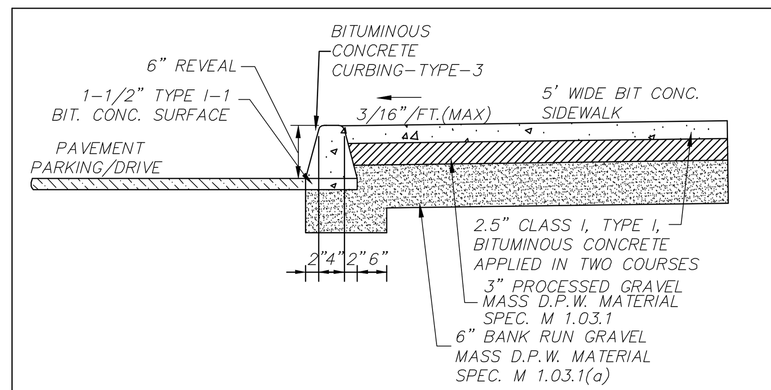

BITUMINOUS CONCRETE SIDEWALK AND BIT. CONC. CURBING TYPE–3 DETAIL
NOT TO SCALE

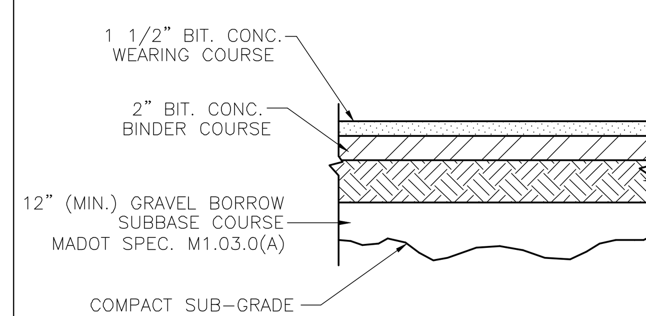

TYPICAL PAVEMENT SECTION
NOT TO SCALE

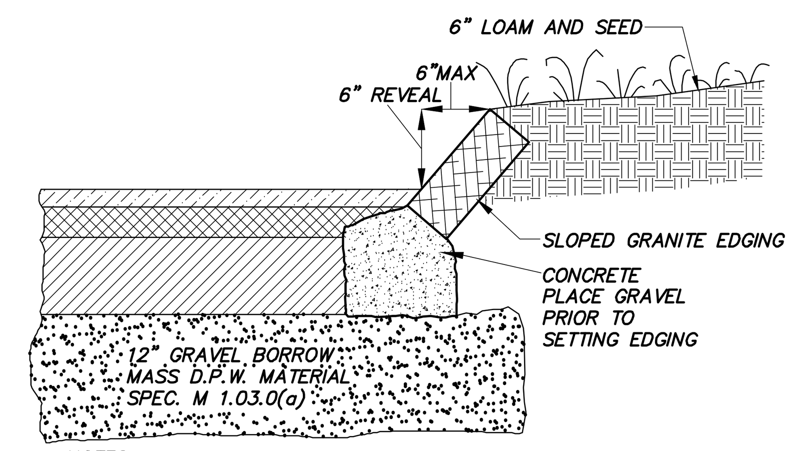

NOTES
1. ALL GRAVEL IS TO BE COMPACTED TO 95% MAX. DRY DENSITY.
2. AREA UNDER GRAVEL BASE COURSE TO BE FREE OF ORGANIC MATERIAL, TRASH, ECT. FILL WHERE REQUIRED SHALL CONFORM TO MASS. D.P.W. 1.03.c. 6" MAX. STONE
3. SLOPED GRANITE CURBING TO BE USED AT ROUNDING OF INTERSECTIONS.

SLOPED GRANITE CURB DETAIL
NOT TO SCALE

FILE: SLOPE GRANITE CURB.DWG

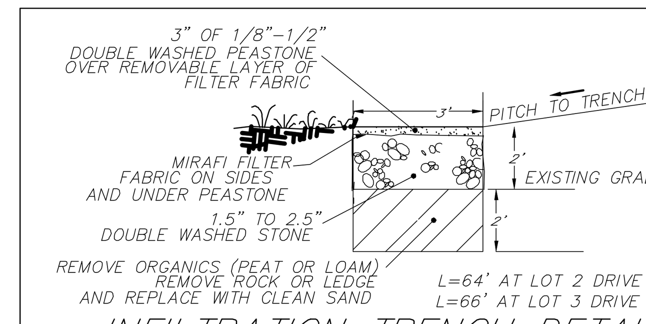

INFILTRATION TRENCH DETAIL
NOT TO SCALE

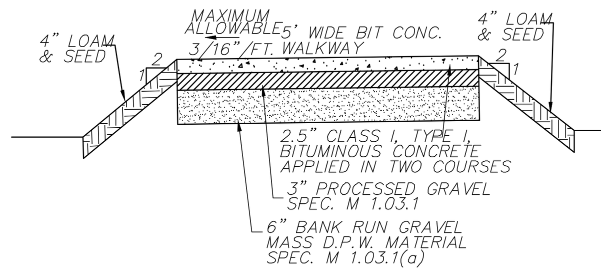

BITUMINOUS CONCRETE WALKWAY DETAIL
NOT TO SCALE

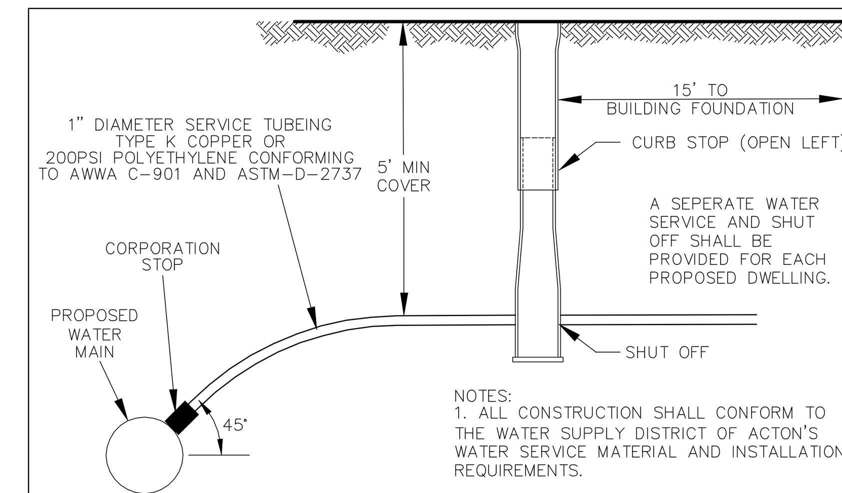

NOTES:
1. ALL CONSTRUCTION SHALL CONFORM TO THE WATER SUPPLY DISTRICT OF ACTON'S WATER SERVICE MATERIAL AND INSTALLATION REQUIREMENTS.

WATER SERVICE CONNECTION
NOT TO SCALE

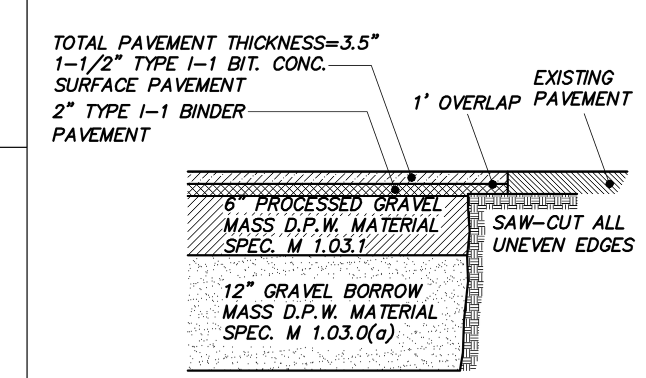

PAVEMENT PATCH DETAIL
NOT TO SCALE

PVMNTPTCH_ACTON.DWG

NOTES:
1. A 1 1/2" TEMPORARY PATCH COURSE OVER THE ENTIRE EXCAVATED AREA (BIT-CONC. TYPE I-1 HOT TOP) IS TO BE LEFT IN PLACE FOR AT LEAST ONE MONTH AND NOT MORE THAN THREE MONTHS, UNTIL NO FURTHER SETTLING CAN BE REASONABLY EXPECTED. THIS SHALL THEN BE REMOVED. ANY UNEVEN EDGES OF EXISTING PAVEMENT WILL BE CUT VERTICALLY WITH AN APPROVED POWER TOOL AND TACK COATED WITH ASPHALT EMULSION (RC-2)
2. IF EXISTING PAVEMENT IS OF A GREATER DEPTH THAN PATCHING REQUIREMENTS, THE PATCH SHALL BE OF THE SAME DEPTH. AT NO TIME SHOULD THE BIT. CONC. BE LAID IN LAYERS GREATER THAN 2 1/2".
3. WHEN THE PATCH IS COMPLETE, THE JOINTS SHOULD BE PAINTED WITH AN RC-2 AND SEALED WITH SAND.
4. THE REQUIREMENTS OF THIS DETAIL SHALL BE EMPLOYED AT ALL POINTS WHERE PROPOSED PAVEMENT ENCOUNTERS EXISTING PAVEMENT

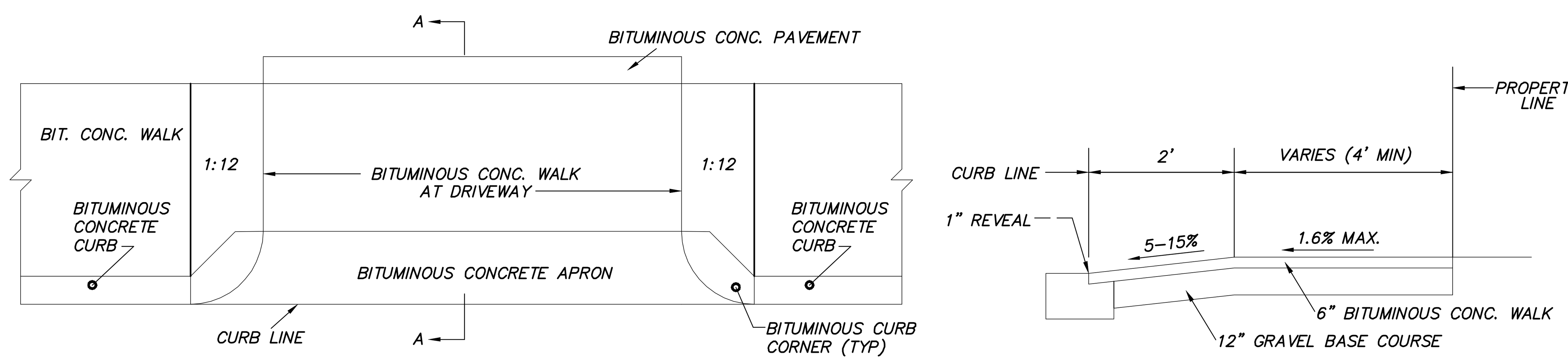

CURB CUT DETAIL
NOT TO SCALE

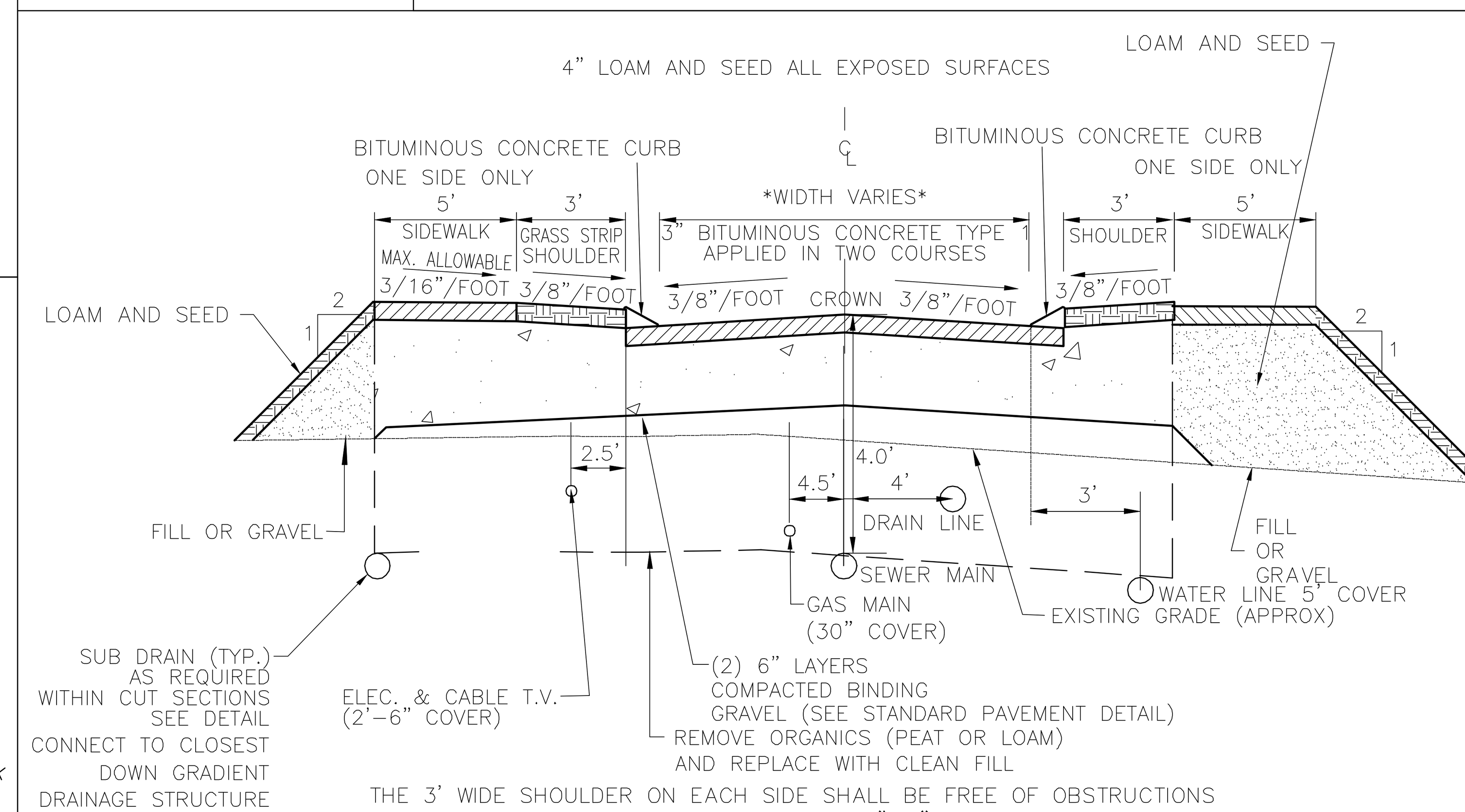

THE 3' WIDE SHOULDER ON EACH SIDE SHALL BE FREE OF OBSTRUCTIONS THE SHOULDER SHALL BE PREPARED WITH 3"-4" OF TOPSOIL OVER THE SAME GRAVEL BASE AS THE WEAR SURFACE, AND SEEDED. THE SHOULDER, AND ALL EXPOSED AREAS SHALL BE LOAMED AND SEEDED.

*QUAIL RIDGE DRIVE
- 24' – STA 0+00 TO 7+19
- 20' – STA 7+44 TO INTERSECTION WITH PARKLAND LANE (STA 14+50)
- 24' – STA 14+50 TO 33+100

*PARKLAND LANE
- 24' WIDE – ENTIRE LENGTH

*SKYLINE DRIVE
- 20' – STA 0+00 TO 18+25
- 24' – STA 18+25 TO 21+19

*RYDER PATH
- 24' = STA 0+00 TO END

*GREENSIDE LANE
- 24' – STA 4+48 TO 4+75
- 20' – STA 4+75 TO END

TYPICAL ROAD CROSS-SECTION
NOT TO SCALE

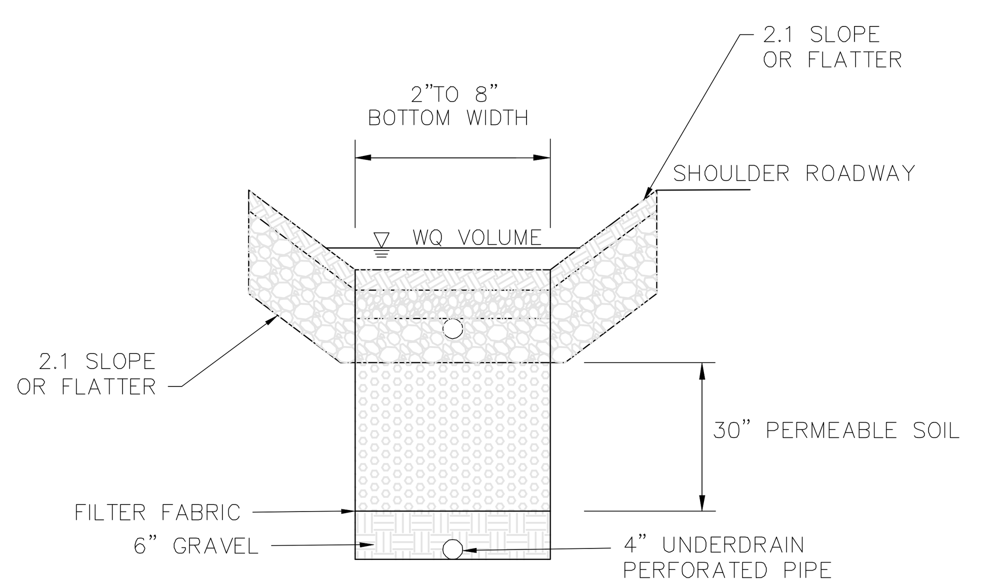

WATER QUALITY SWALE OUTLET STRUCTURE
NOT TO SCALE

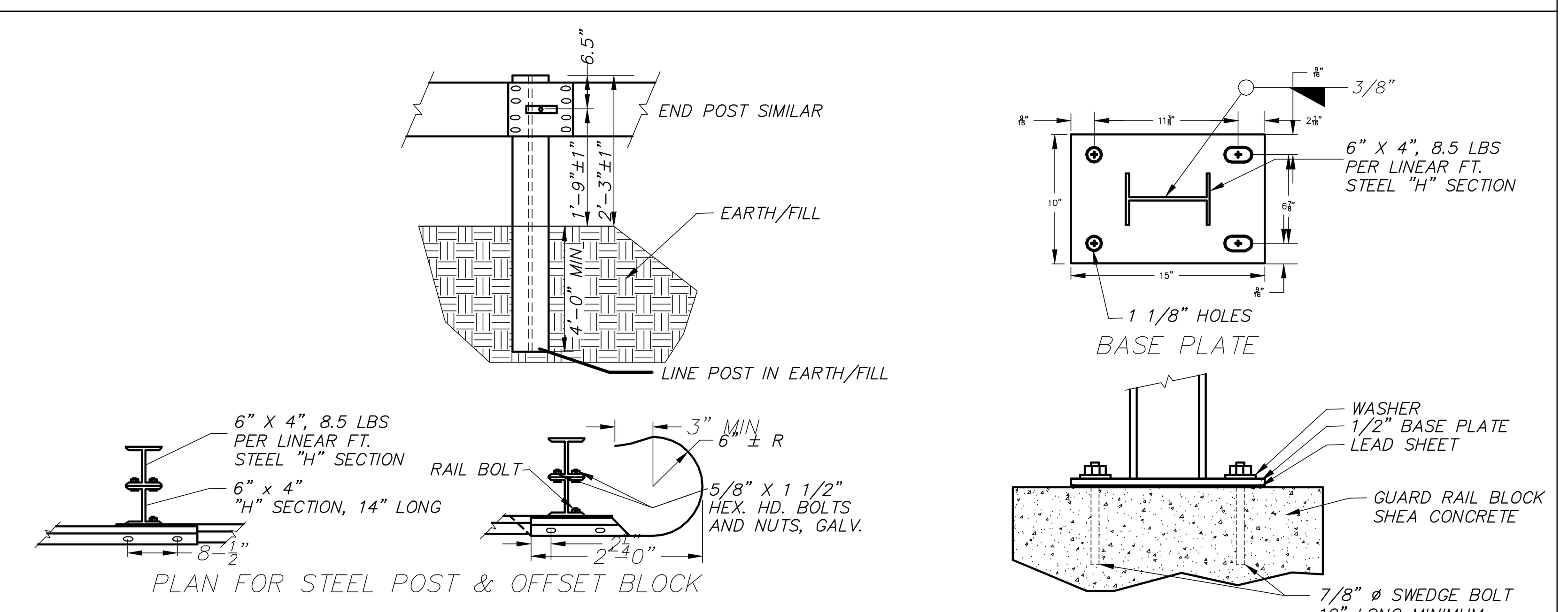

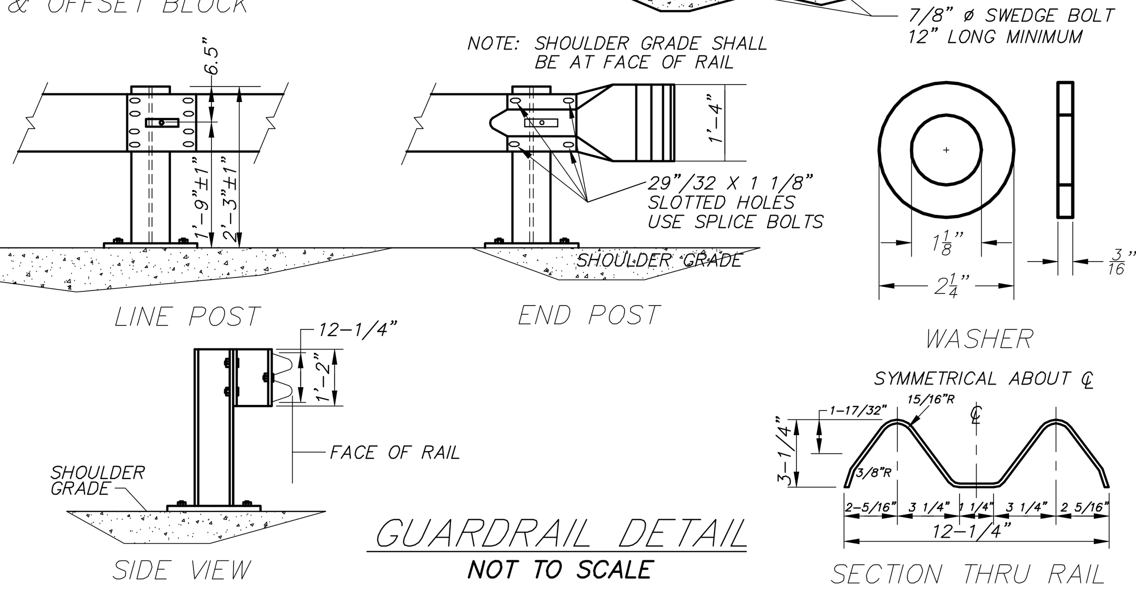

GENERAL NOTES:
1. STEEL POSTS, OFFSET BLOCKS, ANCHORS, PLATES AND ALL FITTINGS TO BE GALVANIZED.
2. ALL DIMENSIONS SUBJECT TO MANUFACTURER'S TOLERANCES.
3. RAIL PANELS AND END SECTIONS TO BE 12 GAGE STEEL.
4. BACK-UP PLATE TO BE PLACED BEHIND RAIL ELEMENTS AT INTERMEDIATE STEEL POSTS (NON-SPLICE POSTS.)
5. ALL PARTS SHALL CONFORM TO CURRENT MHD STANDARD SPECIFICATIONS.
6. WHEN GUARDRAIL IS CONSTRUCTED AT UP TO FOUR FEET FROM EDGE OF PAVEMENT, THE GUARDRAIL HEIGHT WILL BE SET FROM THE GRADE AT THE EDGE OF PAVEMENT.
7. WHEN GUARDRAIL IS CONSTRUCTED MORE THAN FOUR FEET FROM THE EDGE OF PAVEMENT, THE GUARDRAIL, WILL BE SET FROM THE GRADE AT THE FACE OF RAIL.

CONCRETE ATTACHMENT NOTES:
1. SWEDGE BOLTS, NUTS AND WASHERS ARE TO BE GALVANIZED.
2. HOLES FOR SWEDGE BOLTS SHALL BE 10" DEEP. SWEDGE BOLTS TO BE SET IN EPOXY RESIN, AS APPROVED BY ENGINEER.

GUARDRAIL DETAIL
NOT TO SCALE

BOHLER ENGINEERING
CIVIL & CONSULTING ENGINEERS
SURVEYORS
PROJECT MANAGERS
ENVIRONMENTAL CONSULTANTS
LANDSCAPE ARCHITECTS
CORPORATE OFFICE: ♦ WARREN, NJ
OFFICES: ♦ SOUTHBOROUGH, MA ♦ BOWIE, MD ♦ TOWSON, MD ♦ ALBANY, NY ♦ RONKONKOMA, NY ♦ CENTER VALLEY, PA ♦ CHALFONT, PA ♦ PHILADELPHIA, PA ♦ STERLING, VA ♦ WARRENTON, VA ♦ FORT LAUDERDALE, FL ♦ TAMPA, FL

THE INFORMATION, DESIGN AND CONTENT OF THIS PLAN ARE PROPRIETARY AND SHALL NOT BE COPIED OR USED FOR ANY PURPOSE WITHOUT PRIOR WRITTEN AUTHORIZATION FROM BOHLER ENGINEERING. ONLY APPROVED, SIGNED AND SEALED PLANS SHALL BE UTILIZED FOR CONSTRUCTION PURPOSES © 2008 BOHLER ENGINEERING.

REVISIONS

REV	DATE	COMMENT	BY
1	07-06-2011	CON-COM SUBMISSION	JAB
2			
3			
4			
5			
6			
7			
8			
9			

STOP - CALL BEFORE YOU DIG!

THE FOLLOWING STATES REQUIRE NOTIFICATION BY EXCAVATORS, DESIGNERS, OR ANY PERSON PREPARING TO DISTURB THE EARTH'S SURFACE ANYWHERE IN THE STATE.
(MA, ME, NH, RI, VT 1-888-344-7233)
(CT 1-800-922-4455)
(NY 1-800-962-7962)

NOT APPROVED FOR CONSTRUCTION

PROJECT No.:	W111022
DRAWN BY:	CFD
CHECKED BY:	JAB/SPD
DATE:	05/23/2011
SCALE:	AS NOTED
CAD I.D.:	w111022ss1_details

PROJECT:

SITE PLAN
FOR
Pulte Homes
THE RESIDENCES AT QUAIL RIDGE

LOCATION OF SITE
354 B GREAT ROAD & SKYLINE DR.
TOWN OF ACTON
MIDDLESEX COUNTY, MA

BOHLER ENGINEERING
352 TURNPIKE ROAD
SOUTHBOROUGH, MA 01772
Phone: (508) 480-9900
Fax: (508) 480-9080
www.BohlerEngineering.com

S.P. DECOURSEY
PROFESSIONAL ENGINEER
MASSACHUSETTS LICENSE No. 36424
NEW HAMPSHIRE LICENSE No. 9308
MAINE LICENSE No. 8408
VERMONT LICENSE No. 7110
CONNECTICUT LICENSE No. 23862
RHODE ISLAND LICENSE No. 7990

SHEET TITLE:
CONSTRUCTION DETAILS SHEET

SHEET NUMBER:
33
OF 37

REV 0 - 05/23/2011

P:\11\W111022\DWG\w111022ss1_details.dwg, 33-Details, 4/23/2010, 10:17:14 AM, jcerkanowicz, XeroX510-1.pc3, User634, 1:1

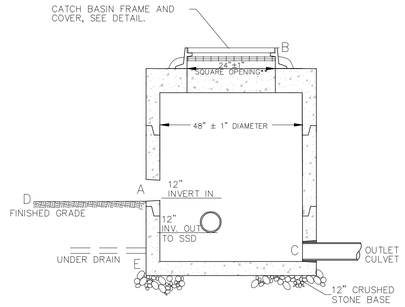

OUTLET STRUCTURE	A	B	C	D	E
#12	18"ORIFICE=224.20	GRATE=225.20	18" HDPE=215.0	BOTTOM BASIN=221.00	N/A
#15	3"ORIFICE=194.00 12"ORIFICE=196.85	GRATE=199.10	12" HDPE=192.0	BOTTOM BASIN=194.00	ELEV. 192
#17	3"ORIFICE=224.20 12"ORIFICE=216.50	GRATE=218.25	18" HDPE=212.5	BOTTOM BASIN=214.50	ELEV. 212.50
#22	3"ORIFICE=202.00 12"ORIFICE=203.60	GRATE=205.00	12" HDPE INVERT=202.00	BOTTOM BASIN=202.00	N/A
#28	3"ORIFICE=217.00	OPEN 4' DIAMETER MH NO COVER OR FRAME AND GRATE ELEV. = 219.10	EXISTING 12" RCP=217.0	BOTTOM BASIN=217.00	N/A

DIVERSION MANHOLE STRUCTURE

NOT TO SCALE

NOTE: SEE PRECAST CONCRETE MANHOLE DETAIL FOR MANHOLE SPECIFICATIONS.

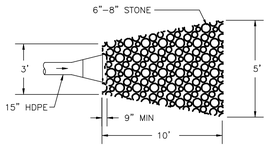

PLAN VIEW

FLARED END RIP RAP DETAIL

NOT TO SCALE

ELEVATION TABLE

OUTLET STRUCTURE	A (ELEV.)	B (ELEV.)	C (ELEV.)	D (ANGLE°)
9	230.00	234.00	230.00	5°
10	220.00	224.00	220.00	5°
11	215.00	220.00	215.00	5°
12	220.00	225.00	221.50	5°
13	182.80	187.00	183.00	5°
15	194.00	199.00	194.00	5°
16	218.00	224.00	222.00	10°
17	215.00	218.00	215.00	5°
20	163.50	166.00	NO V-NOTCH	NO V-NOTCH
21	155.00	157.80	155.00	5°
22	201.00	207.50	204.00	30°
27	222.00	226.00	224.00	35°
29	221.00	224.25	223.0	5°

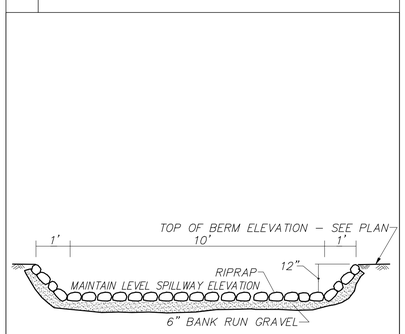

EMERGENCY SPILLWAY DETAIL

NOT TO SCALE

Hydro Conduit

STC 450i Precast Concrete Stormceptor (450 US Gallon Capacity)

DR. BY: N. BALDWIN | CK. BY: | DATE: MARCH 20, 2001 | SCALE: N.T.S. | DWG.# | PROJECT LOCATION:

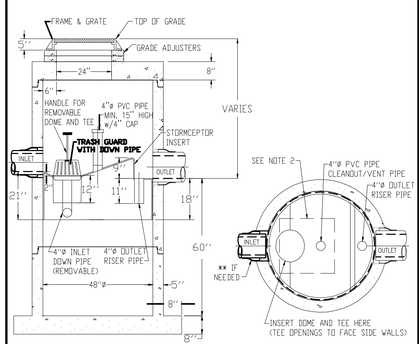

SECTION THRU CHAMBER

SECTION THRU PLAN VIEW

NOTE :
1. THE USE OF FLEXIBLE CONNECTIONS IS RECOMMENDED AT THE OUTLET WHERE APPLICABLE.
2. THE COVER SHOULD BE POSITIONED OVER THE 4"ø CLEANOUT/VENT PIPE AND THE 4"ø INLET DOWN PIPE.
3. THE STORMCEPTOR SYSTEM IS PROTECTED BY ONE OR MORE OFF THE FOLLOWING U.S. PATENTS: #4985148, #5498331, #5725760, #5753115, #5849181, #6068765, AND #6371690.
4. CONTRACTOR TO PROVIDE CRANE TO SET UNIT (HEAVIEST SECTION WEIGHS 5000 LB)

Hydro Conduit

STC 3600 Precast Concrete Stormceptor (3600 US Gallon Capacity)

DR. BY: N. BALDWIN | CK. BY: | DATE: FEB. 13, 2001 | SCALE: N.T.S. | DWG.# | PROJECT LOCATION:

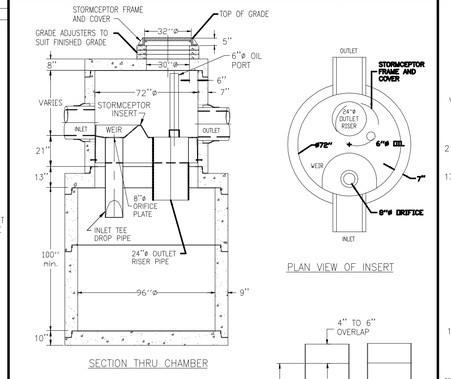

PLAN VIEW OF INSERT

SECTION THRU CHAMBER

NOTE :
1. THE USE OF FLEXIBLE CONNECTIONS IS RECOMMENDED AT THE INLET AND OUTLET WHERE APPLICABLE.
2. THE COVER SHOULD BE POSITIONED OVER THE 24"ø OUTLET RISER PIPE AND THE 6"ø OIL PORT.
3. THE STORMCEPTOR SYSTEM IS PROTECTED BY ONE OR MORE OF THE FOLLOWING U.S. PATENTS: #4985148, #5498331, #5725760, #5753115, #5849181, #6068765, AND #6371690
4. CONTRACTOR TO PROVIDE CRANE TO SET THE UNIT (HEAVIEST SECTION WEIGHS 7 TONS).

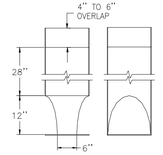

ENLARGED INLET TEE DROP PIPE

REV.	DESCRIPTION	BY	DATE

Hydro Conduit

STC 4800 Precast Concrete Stormceptor (4800 US Gallon Capacity)

DR. BY: N. BALDWIN | CK. BY: | DATE: FEB. 13, 2001 | SCALE: N.T.S. | DWG.# | PROJECT LOCATION:

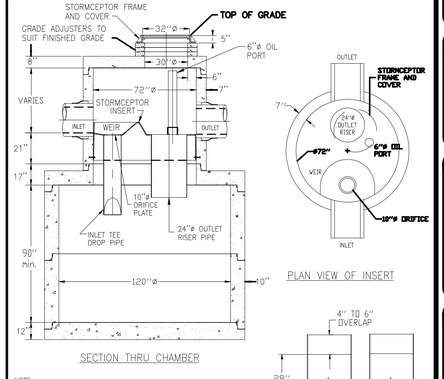

PLAN VIEW OF INSERT

SECTION THRU CHAMBER

NOTE :
1. THE USE OF FLEXIBLE CONNECTIONS IS RECOMMENDED AT THE INLET AND OUTLET WHERE APPLICABLE.
2. THE COVER SHOULD BE POSITIONED OVER THE 24"ø OUTLET RISER PIPE AND THE 6"ø OIL PORT.
3. THE STORMCEPTOR SYSTEM IS PROTECTED BY ONE OR MORE OF THE FOLLOWING U.S. PATENTS: #4985148, #5498331, #5725760, #5753115, #5849181, #6068765, AND #6371690.
4. CONTRACTOR TO PROVIDE CRANE TO SET THE UNIT (HEAVIEST SECTION WEIGHS 8 TONS).

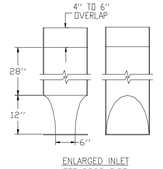

ENLARGED INLET TEE DROP PIPE

REV.	DESCRIPTION	BY	DATE

BOHLER ENGINEERING

CIVIL & CONSULTING ENGINEERS
SURVEYORS
PROJECT MANAGERS
ENVIRONMENTAL CONSULTANTS
LANDSCAPE ARCHITECTS

CORPORATE OFFICE:
◆ WARREN, NJ

OFFICES:
◆ SOUTHBOROUGH, MA
◆ BOWIE, MD
◆ TOWSON, MD
◆ LEESBURG, VA
◆ ROHNOKOMA, NY
◆ CENTER VALLEY, PA
◆ CHALFONT, PA
◆ ALLENTOWN, PA
◆ STERLING, VA
◆ WILLIAMSTOWN, NJ
◆ FORT LAUDERDALE, FL
◆ TAMPA, FL

THESE DRAWINGS ARE THE PROPERTY OF BOHLER ENGINEERING AND ARE NOT TO BE USED IN WHOLE OR IN PART FOR ANY OTHER PROJECT WITHOUT THE EXPRESS WRITTEN CONSENT OF BOHLER ENGINEERING. ONLY APPROVED, SIGNED AND SEALED PLANS SHALL BE CONSTRUCTED/FABRICATED. © 2009 BOHLER ENGINEERING

REVISIONS

REV	DATE	COMMENT	BY
1	07-06-2011	CON-COM SUBMISSION	JAB
2			
3			
4			
5			
6			
7			
8			
9			

THE FOLLOWING STATES REQUIRE NOTIFICATION BY EXCAVATORS, DESIGNERS, OR ANY PERSON PREPARING TO DISTURB THE EARTH'S SURFACE ANYWHERE IN THE STATE.
(MA, ME, NH, RI, VT 1-888-344-7233)
(CT 1-800-922-4455)
(NY 1-800-962-7962)

NOT APPROVED FOR CONSTRUCTION

PROJECT No.:	W111022
DRAWN BY:	CFD
CHECKED BY:	JAB/SPD
DATE:	05/23/2011
SCALE:	AS NOTED
CAD I.D.:	w111022ss1_details

PROJECT:

SITE PLAN

FOR

Pulte Homes

THE RESIDENCES AT QUAIL RIDGE

LOCATION OF SITE
354 B GREAT ROAD & SKYLINE DR.
TOWN OF ACTON
MIDDLESEX COUNTY, MA

BOHLER ENGINEERING
352 TURNPIKE ROAD
SOUTHBOROUGH, MA 01772
Phone: (508) 480-9900
Fax: (508) 480-9080
www.BohlerEngineering.com

S.P. DECOURSEY
PROFESSIONAL ENGINEER
MASSACHUSETTS LICENSE No. 36424
NEW HAMPSHIRE LICENSE No. 9308
MAINE LICENSE No. 8408
VERMONT LICENSE No. 7110
CONNECTICUT LICENSE No. 23962
RHODE ISLAND LICENSE No. 7990

SHEET TITLE:

CONSTRUCTION DETAILS SHEET

SHEET NUMBER:

34 OF 37

REV 0 - 05/23/2011

P:\11\W111022\DWG\w111022ss1_details.dwg, 24-Details, 4/23/2010, 10:17:14 AM, jperbonetcz, Xerox3510-1pc3, User434, I:\

SUBSURFACE RECHARGE AREA DETAIL

NOT TO SCALE

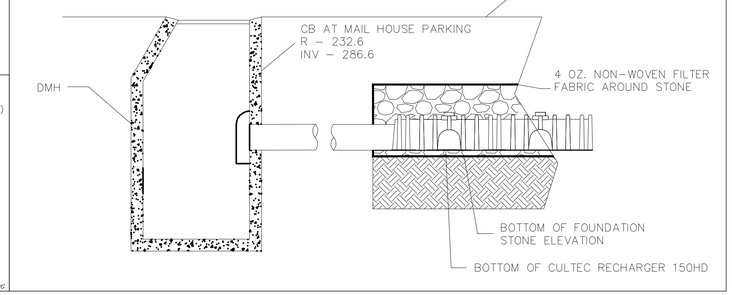

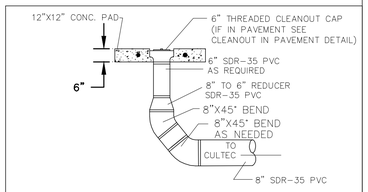

CULTEC CLEANOUT DETAIL

NOT TO SCALE

FILE: CULTEC CLEANOUT.DWG

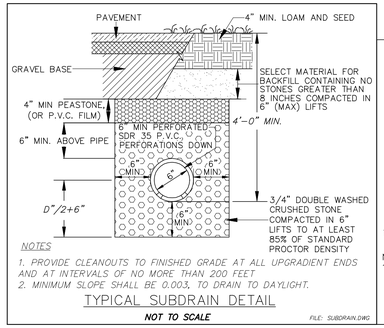

TYPICAL SUBDRAIN DETAIL

NOT TO SCALE

FILE: SUBDRAIN.DWG

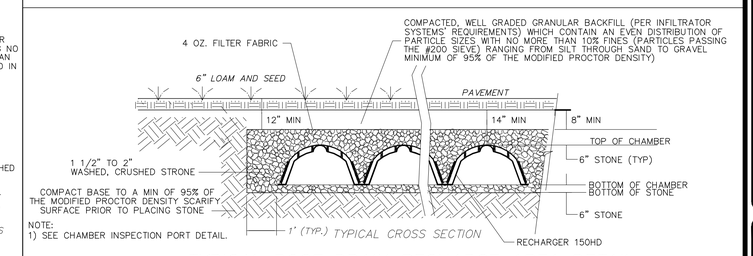

TYPICAL ROOF DRAIN RECHARGE AREA DETAIL

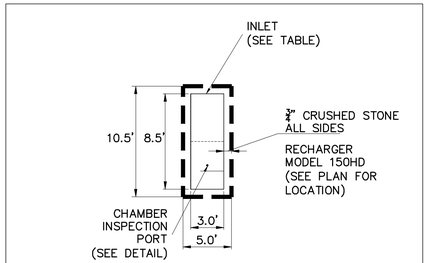

ROOFDRAIN DRYWELL DETAIL

NOT TO SCALE

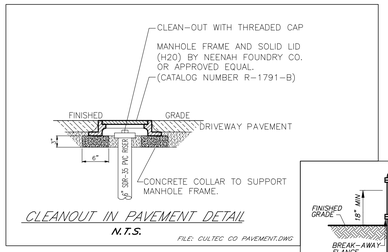

CLEANOUT IN PAVEMENT DETAIL

N.T.S.

FILE: CULTEC CO PAVEMENT.DWG

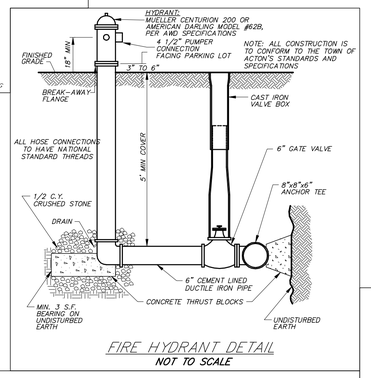

FIRE HYDRANT DETAIL

NOT TO SCALE

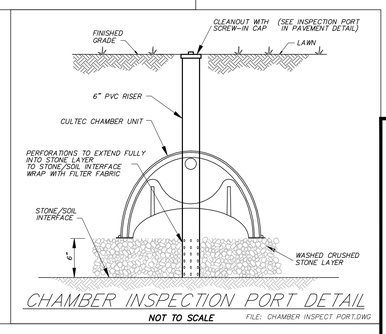

CHAMBER INSPECTION PORT DETAIL

NOT TO SCALE

FILE: CHAMBER INSPECT PORT.DWG

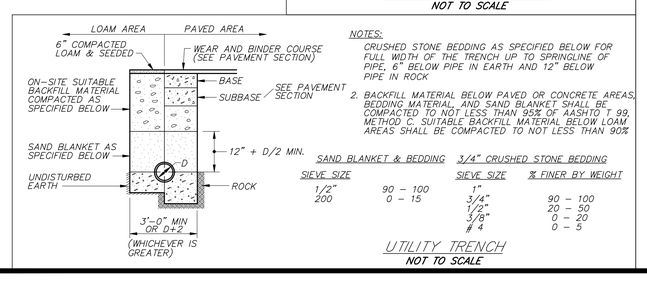

NOTES:

1. CRUSHED STONE BEDDING AS SPECIFIED BELOW FOR FULL WIDTH OF THE TRENCH UP TO SPRINGLINE OF PIPE, 6" BELOW PIPE IN EARTH AND 12" BELOW PIPE IN ROCK
2. BACKFILL MATERIAL BELOW PAVED OR CONCRETE AREAS, BEDDING MATERIAL, AND SAND BLANKET SHALL BE COMPACTED TO NOT LESS THAN 95% OF AASHTO T 99, METHOD C. SUITABLE BACKFILL MATERIAL BELOW LOAM AREAS SHALL BE COMPACTED TO NOT LESS THAN 90%

SAND BLANKET & BEDDING

SIEVE SIZE	
1/2"	90 – 100
200	0 – 15

¾" CRUSHED STONE BEDDING

SIEVE SIZE	% FINER BY WEIGHT
1"	90 – 100
¾"	20 – 50
1/2"	0 – 20
3/8"	0 – 5
# 4	

UTILITY TRENCH

NOT TO SCALE

CULTEC RECHARGER 150HD HEAVY DUTY

NOT TO SCALE

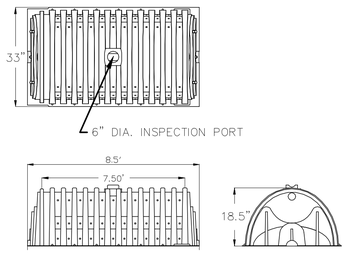

ALL RECHARGER 150HD HEAVY DUTY UNITS ARE MARKED WITH A COLOR STRIPE FORMED INTO THE PART ALONG THE LENGTH OF THE CHAMBER.

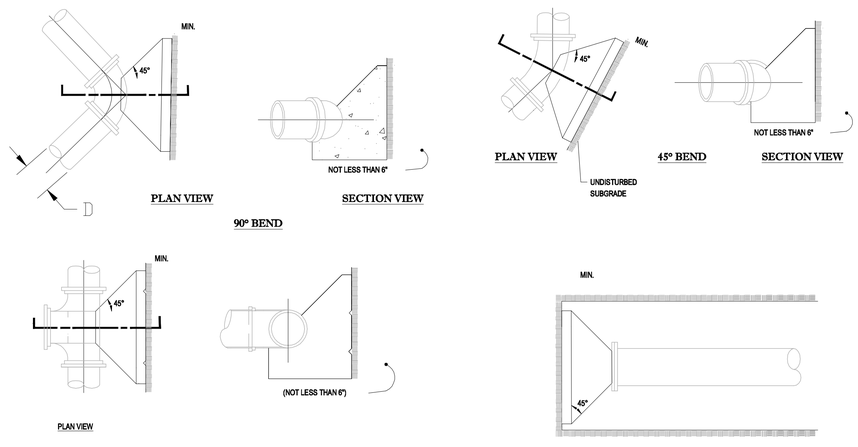

(TO BE USED AT ALL WATER MAIN BENDS)

THRUST BLOCK DETAIL

N.T.S.

BOHLER ENGINEERING

CIVIL & CONSULTING ENGINEERS
SURVEYORS
PROJECT MANAGERS
ENVIRONMENTAL CONSULTANTS
LANDSCAPE ARCHITECTS

CORPORATE OFFICE:
◆ WARREN, NJ

OFFICES:
◆ SOUTHBOROUGH, MA
◆ BALTIMORE, MD
◆ TOWSON, MD
◆ LANSING, MI
◆ ROANOKE/OMA, NY
◆ CENTER VALLEY, PA
◆ CHALFONT, PA
◆ PHILADELPHIA, PA
◆ STERLING, VA
◆ HERNDON, VA
◆ FORT LAUDERDALE, FL
◆ TAMPA, FL

THE INFORMATION CONTAINED IN THIS DRAWING IS THE SOLE PROPERTY OF BOHLER ENGINEERING. ANY REPRODUCTION IN PART OR WHOLE WITHOUT THE WRITTEN PERMISSION OF BOHLER ENGINEERING IS PROHIBITED. ANY USE OF THESE PLANS AND SPECIFICATIONS FOR ANY PROJECT OTHER THAN THE PROJECT FOR WHICH THEY WERE PREPARED, AS WELL AS ANY CHANGES OR REVISIONS MADE TO THESE PLANS AND SPECIFICATIONS WITHOUT THE EXPRESS WRITTEN CONSENT OF BOHLER ENGINEERING, WILL BE USED BY OTHERS AT THEIR OWN RISK AND WITHOUT LIABILITY TO BOHLER ENGINEERING. IF ANY UNAUTHORIZED USE OCCURS, THE PARTY RESPONSIBLE FOR THE UNAUTHORIZED USE AGREES TO INDEMNIFY AND HOLD HARMLESS BOHLER ENGINEERING FROM ALL CLAIMS, DAMAGES, AND EXPENSES, INCLUDING ATTORNEY'S FEES, ARISING OUT OF SUCH UNAUTHORIZED USE. IF ANY PART OF THIS AGREEMENT IS FOUND TO BE INVALID OR UNENFORCEABLE, THE REMAINING PROVISIONS SHALL BE VALID AND ENFORCEABLE. THIS AGREEMENT SHALL BE GOVERNED BY THE LAWS OF THE COMMONWEALTH OF MASSACHUSETTS. © 2009 BOHLER ENGINEERING

REVISIONS

REV	DATE	COMMENT	BY
1	07-06-2011	CON-COM SUBMISSION	JAB
2			
3			
4			
5			
6			
7			
8			
9			

THE FOLLOWING STATES REQUIRE NOTIFICATION BY EXCAVATORS, DESIGNERS, OR ANY PERSON PREPARING TO DISTURB THE EARTH'S SURFACE ANYWHERE IN THE STATE.
(MA, ME, NH, RI, VT 1-888-344-7233)
(CT 1-800-922-4455)
(NY 1-800-962-7962)

NOT APPROVED FOR CONSTRUCTION

PROJECT No.:	W111022
DRAWN BY:	CFD
CHECKED BY:	JAB/SPD
DATE:	05/23/2011
SCALE:	AS NOTED
CAD I.D.:	w111022ss1_details

PROJECT:

SITE PLAN

FOR

Pulte Homes

THE RESIDENCES AT QUAIL RIDGE

LOCATION OF SITE
354 B GREAT ROAD & SKYLINE DR.
TOWN OF ACTON
MIDDLESEX COUNTY, MA

BOHLER ENGINEERING
352 TURNPIKE ROAD
SOUTHBOROUGH, MA 01772
Phone: (508) 480-9900
Fax: (508) 480-9080
www.BohlerEngineering.com

S.P. DECOURSEY
PROFESSIONAL ENGINEER
MASSACHUSETTS LICENSE No. 36424
NEW HAMPSHIRE LICENSE No. 9308
MAINE LICENSE No. 9408
VERMONT LICENSE No. 7110
CONNECTICUT LICENSE No. 23982
RHODE ISLAND LICENSE No. 7990

SHEET TITLE:

CONSTRUCTION DETAILS SHEET

SHEET NUMBER:

35
OF 37

REV 0 - 05/23/2011

P:\111W\111022\DWG\ss1\022ss1_details.dwg, 33-Details, 4/23/2010, 10:17:14 AM, joe.fiorentino, Xerox3510i-1.pc3, User434, 1:1

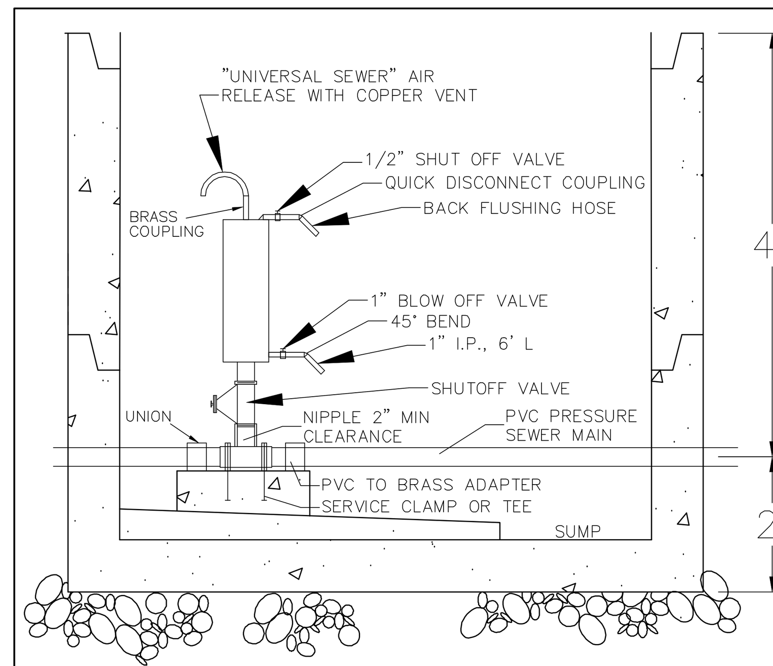

AIR RELEASE VALVE SEWER MANHOLE DETAIL

NOT TO SCALE

NOTES

1. MANHOLE TO CONFORM TO MASS. D.P.W. STANDARD 202.4.0.

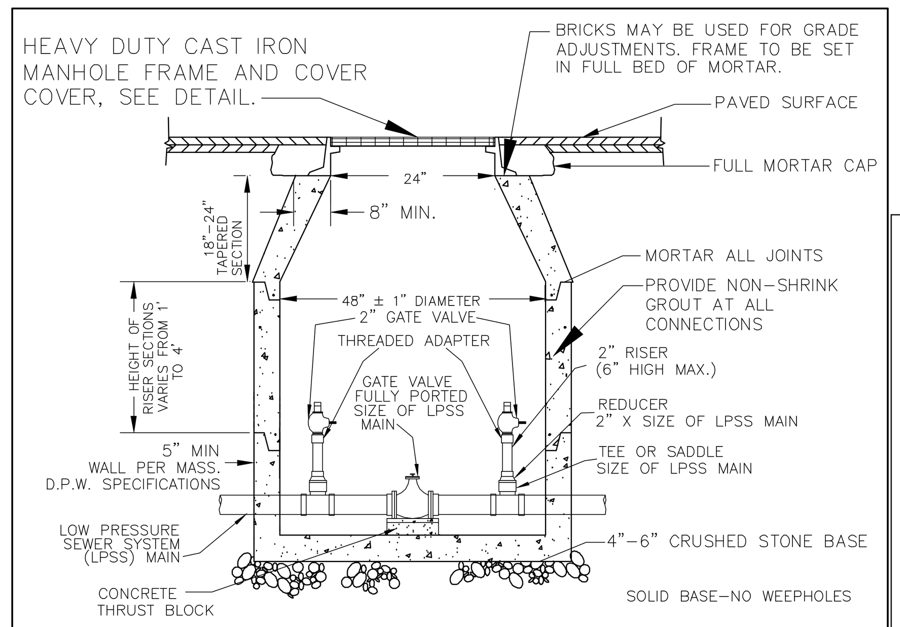

INLINE FLUSHING CONNECTION SEWER MANHOLE DETAIL

NOT TO SCALE

NOTES

1. MANHOLE TO CONFORM TO MASS. D.P.W. STANDARD 202.4.0.

PVC SEWER LINE TO BE ENCASED BY 6" MIN CONCRETE (2500 PSI) WHEN CROSSING WATER LINE FOR A LENGTH OF 10' EITHER SIDE OF CROSSING AND WHEN CROSSING ABOVE A DRAINAGE LINE FOR A LENGTH OF 10' EITHER SIDE OF CROSSING

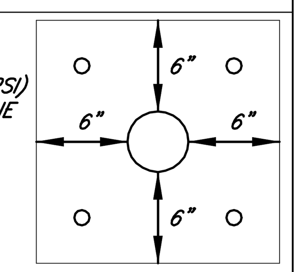

#3 REBAR (TYP) TOTAL OF 4

SDR 21 PVC PIPE

CONC. ENCASEMENT DETAIL

NOT TO SCALE

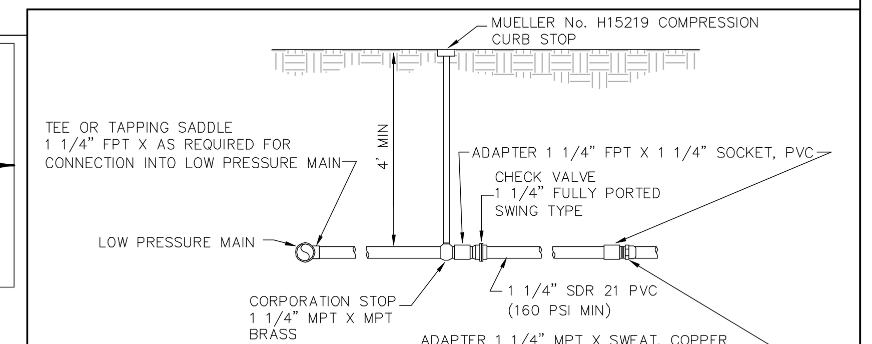

LOW PRESSURE SEWER TYPICAL SERVICE CONNECTION

NOT TO SCALE

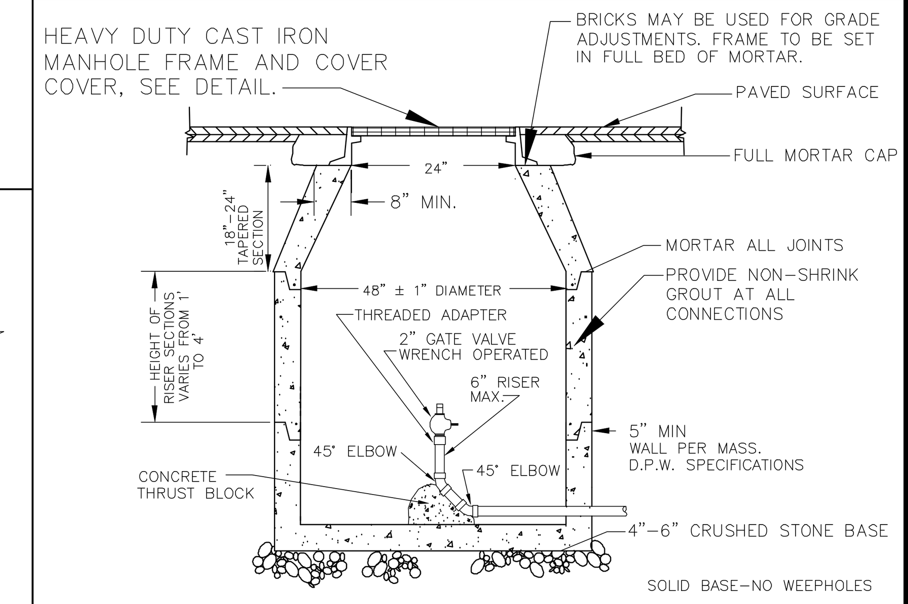

TERMINAL FLUSHING CONNECTION SEWER MANHOLE DETAIL

NOT TO SCALE

NOTES

1. MANHOLE TO CONFORM TO MASS. D.P.W. STANDARD 202.4.0.

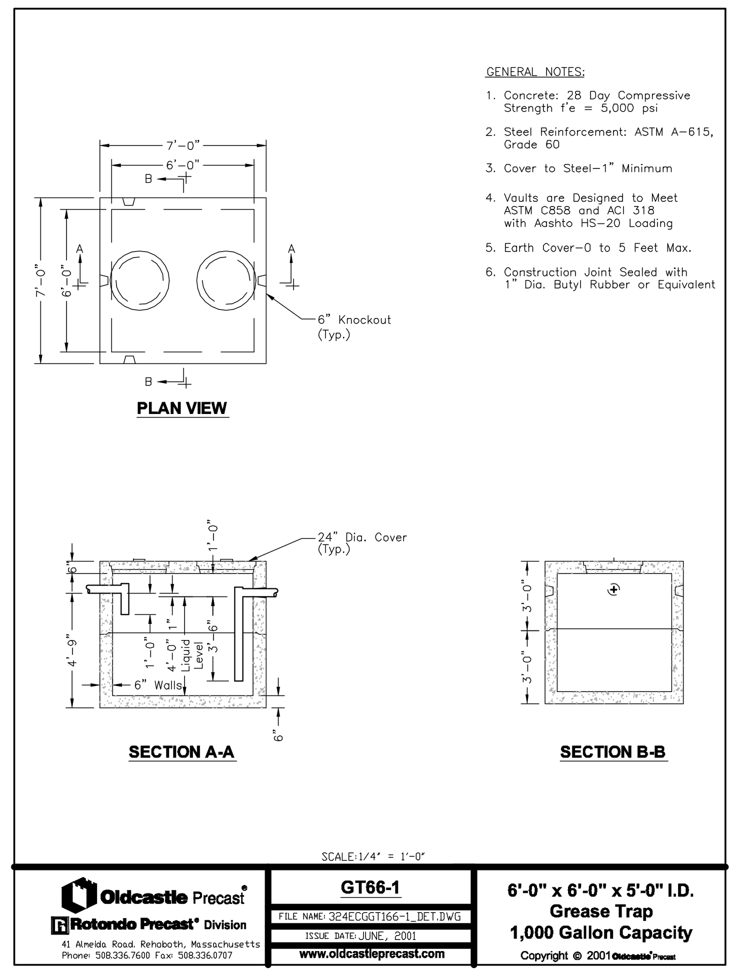

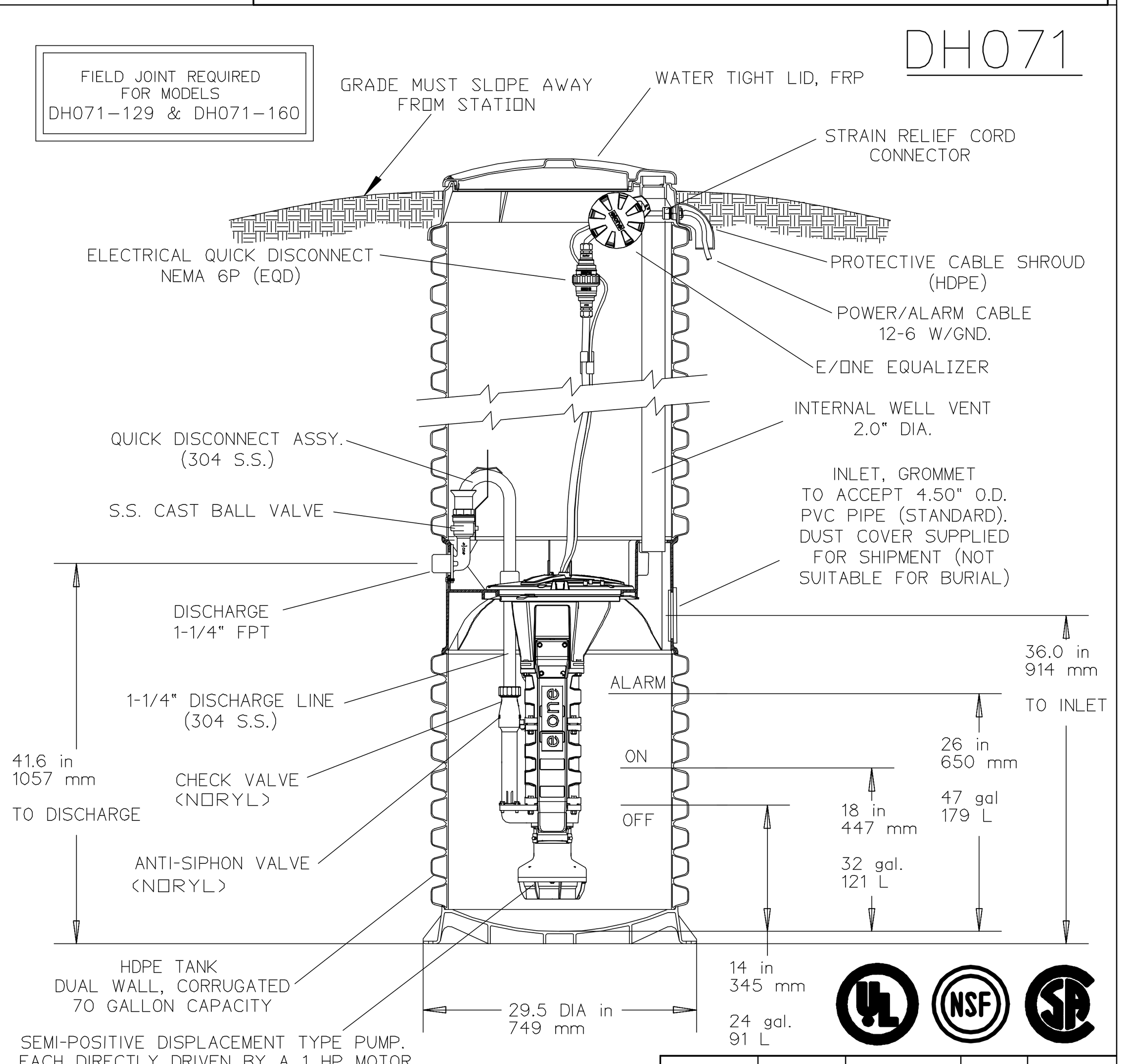

NOTES:
1) RISERS TO BE INSTALLED AS NEEDED TO ACHIEVE DESIRED DEPTH.
2) EACH PUMP SHALL BE EQUIPPED WITH A VISUAL AND AUDIBLE ALARM.

BALLAST REQUIREMENTS

A CONCRETE ANCHOR IS REQUIRED ON ALL OUTDOOR MODEL DH071 STATIONS

SPECIFIC CONCRETE DIMENSIONS ARE REQUIRED TO ACHIEVE NECESSARY BALLAST EFFECT

SEE INSTALLATION INSTRUCTIONS FOR FURTHER DETAILS

LNT	GAE	04/24/07	-	
DR BY	CHK'D	DATE	ISSUE	SCALE

eone SEWER SYSTEMS

MODEL DH071
DETAIL SHEET

NA0050P02

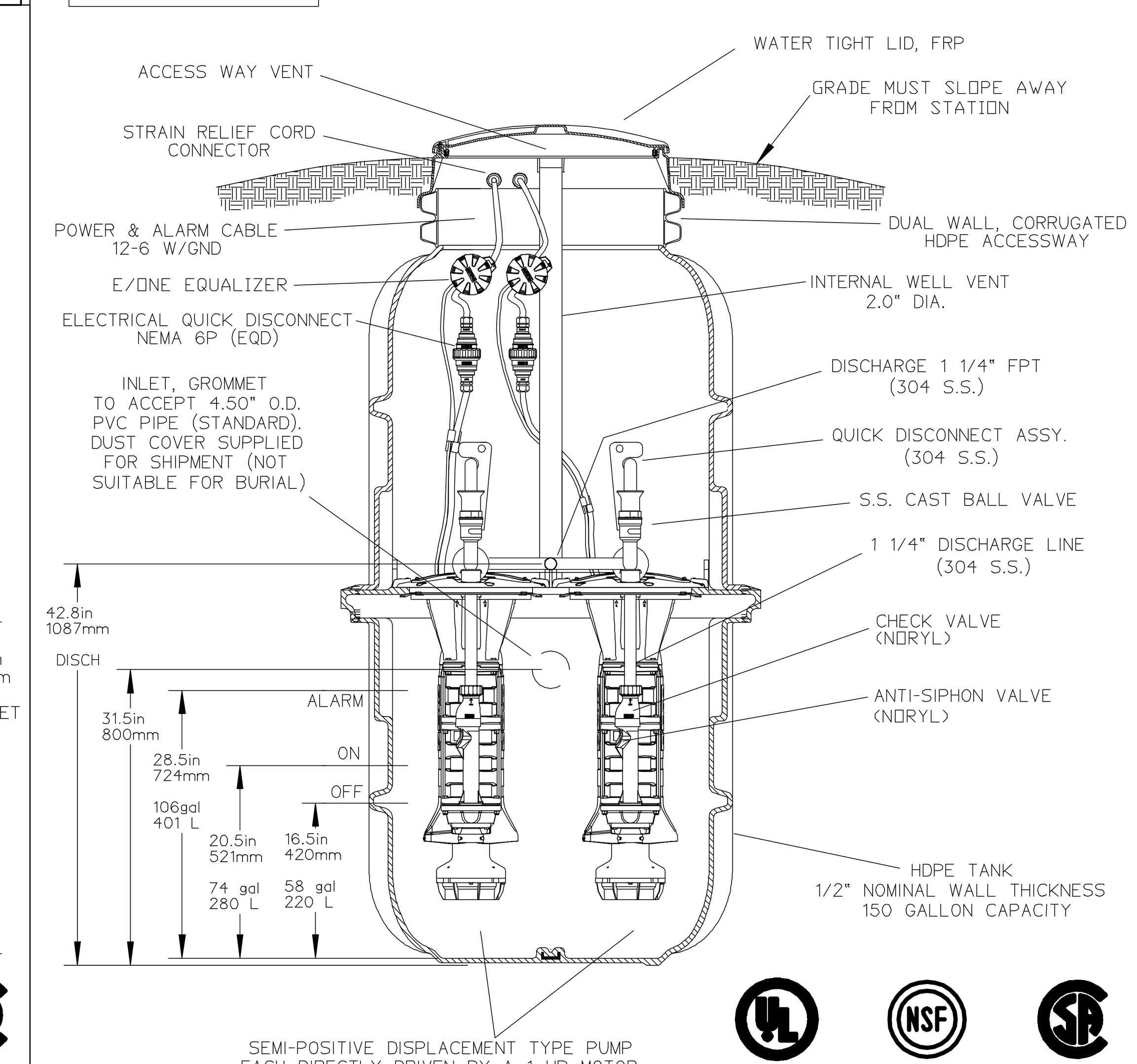

NOTES:
1) RISERS TO BE INSTALLED AS NEEDED TO ACHIEVE DESIRED DEPTH.
2) PUMP SHALL BE EQUIPPED WITH A VISUAL AND AUDIBLE ALARM.

BALLAST REQUIREMENTS

A CONCRETE ANCHOR IS REQUIRED ON ALL OUTDOOR MODEL DH152 STATIONS

SPECIFIC CONCRETE DIMENSIONS ARE REQUIRED TO ACHIEVE NECESSARY BALLAST EFFECT

SEE INSTALLATION INSTRUCTIONS FOR FURTHER DETAILS

LNT	GAE	04/24/07	—	
DR BY	CHK'D	DATE	ISSUE	SCALE

eone SEWER SYSTEMS

MODEL DH152
DETAIL SHEET

NA0052P02

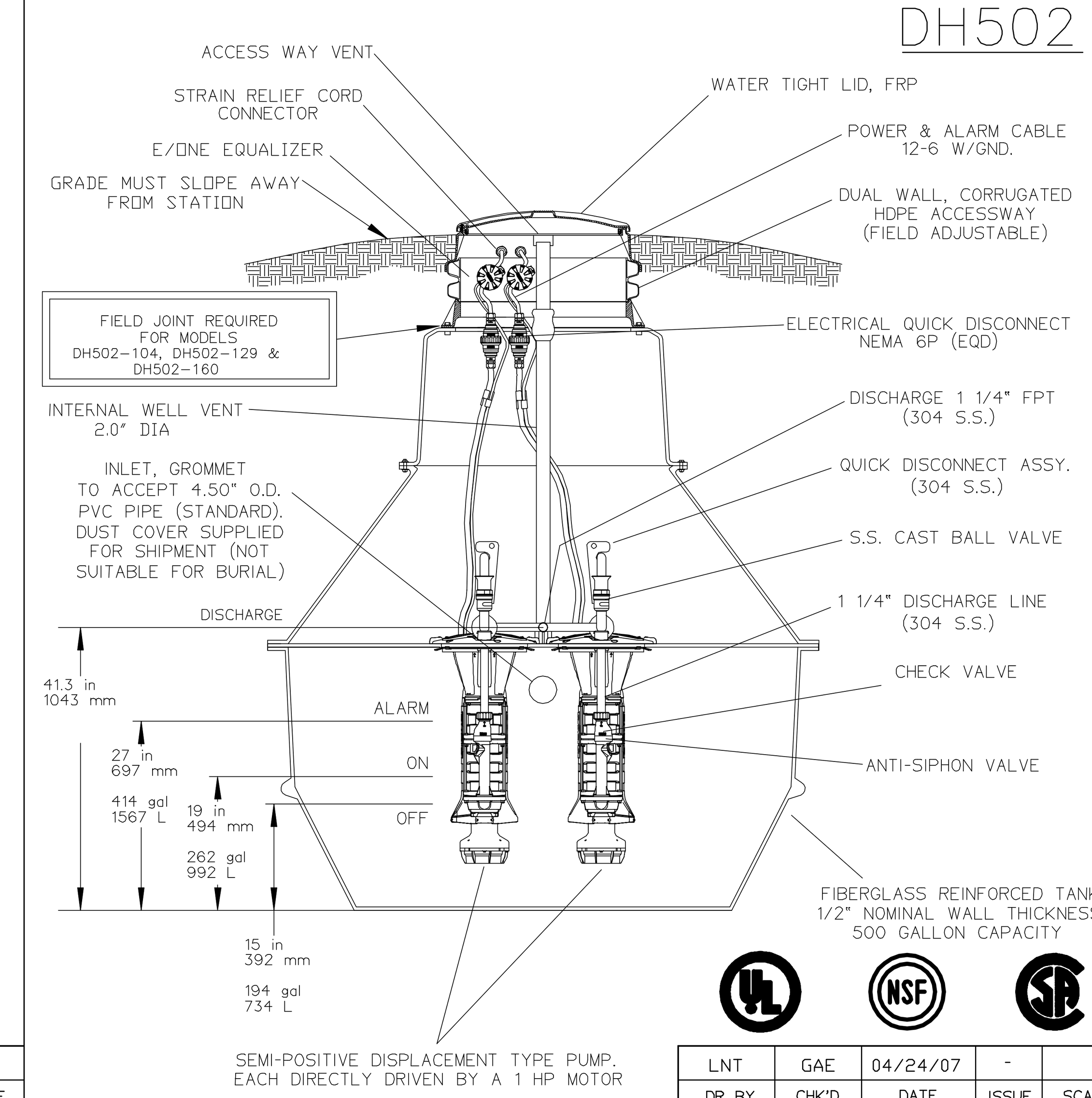

NOTE:
RISERS TO BE INSTALLED AS NEEDED TO ACHIEVE DESIRED DEPTH

SEE INSTALLATION INSTRUCTIONS FOR BALLAST DETAILS

LNT	GAE	04/24/07	-	
DR BY	CHK'D	DATE	ISSUE	SCALE

eone SEWER SYSTEMS

MODEL DH502
DETAIL SHEET

NA0054P02

BOHLER ENGINEERING

CIVIL & CONSULTING ENGINEERS
SURVEYORS
PROJECT MANAGERS
ENVIRONMENTAL CONSULTANTS
LANDSCAPE ARCHITECTS

CORPORATE OFFICE:
♦ WARREN, NJ
OFFICES:
♦ SOUTHBOROUGH, MA ♦ CHALFONT, PA
♦ BOWIE, MD ♦ PHILADELPHIA, PA
♦ TOWSON, MD ♦ STERLING, VA
♦ ALBANY, NY ♦ WARRENTON, VA
♦ RONKONKOMA, NY ♦ FORT LAUDERDALE, FL
♦ CENTER VALLEY, PA ♦ TAMPA, FL

THE INFORMATION, DESIGN AND CONTENT OF THIS PLAN ARE PROPRIETARY AND SHALL NOT BE COPIED OR USED FOR ANY PURPOSE WITHOUT PRIOR WRITTEN AUTHORIZATION FROM BOHLER ENGINEERING. ONLY APPROVED, SIGNED AND SEALED PLANS SHALL BE UTILIZED FOR CONSTRUCTION PURPOSES. © 2008 BOHLER ENGINEERING.

REVISIONS

REV	DATE	COMMENT	BY
1	07-06-2011	CON-COM SUBMISSION	JAB
2			
3			
4			
5			
6			
7			
8			
9			

STOP - CALL BEFORE YOU DIG!

THE FOLLOWING STATES REQUIRE NOTIFICATION BY EXCAVATORS, DESIGNERS, OR ANY PERSON PREPARING TO DISTURB THE EARTH'S SURFACE ANYWHERE IN THE STATE.
(MA, ME, NH, RI, VT 1-888-344-7233)
(CT 1-800-922-4455)
(NY 1-800-962-7962)

NOT APPROVED FOR CONSTRUCTION

PROJECT No.:	W111022
DRAWN BY:	CFD
CHECKED BY:	JAB/SPD
DATE:	05/23/2011
SCALE:	AS NOTED
CAD I.D.:	w111022ss1_details

PROJECT:

SITE PLAN

FOR

Pulte Homes

THE RESIDENCES AT QUAIL RIDGE

LOCATION OF SITE
354 B GREAT ROAD & SKYLINE DR.
TOWN OF ACTON
MIDDLESEX COUNTY, MA

BOHLER ENGINEERING
352 TURNPIKE ROAD
SOUTHBOROUGH, MA 01772
Phone: (508) 480-9900
Fax: (508) 480-9080
www.BohlerEngineering.com

S.P. DECOURSEY
PROFESSIONAL ENGINEER
MASSACHUSETTS LICENSE No. 36424
NEW HAMPSHIRE LICENSE No. 9308
MAINE LICENSE No. 8408
VERMONT LICENSE No. 7110
CONNECTICUT LICENSE No. 23862
RHODE ISLAND LICENSE No. 7990

SHEET TITLE:

CONSTRUCTION DETAILS SHEET

SHEET NUMBER:
36
OF 37

REV 0 - 05/23/2011

P:\11\W111022\DWG\w111022ss1_details.dwg, 36-Details, 4/23/2010, 10:17:14 AM, jcerkanowicz, XeroX510-1.pc3, User634, 1:1

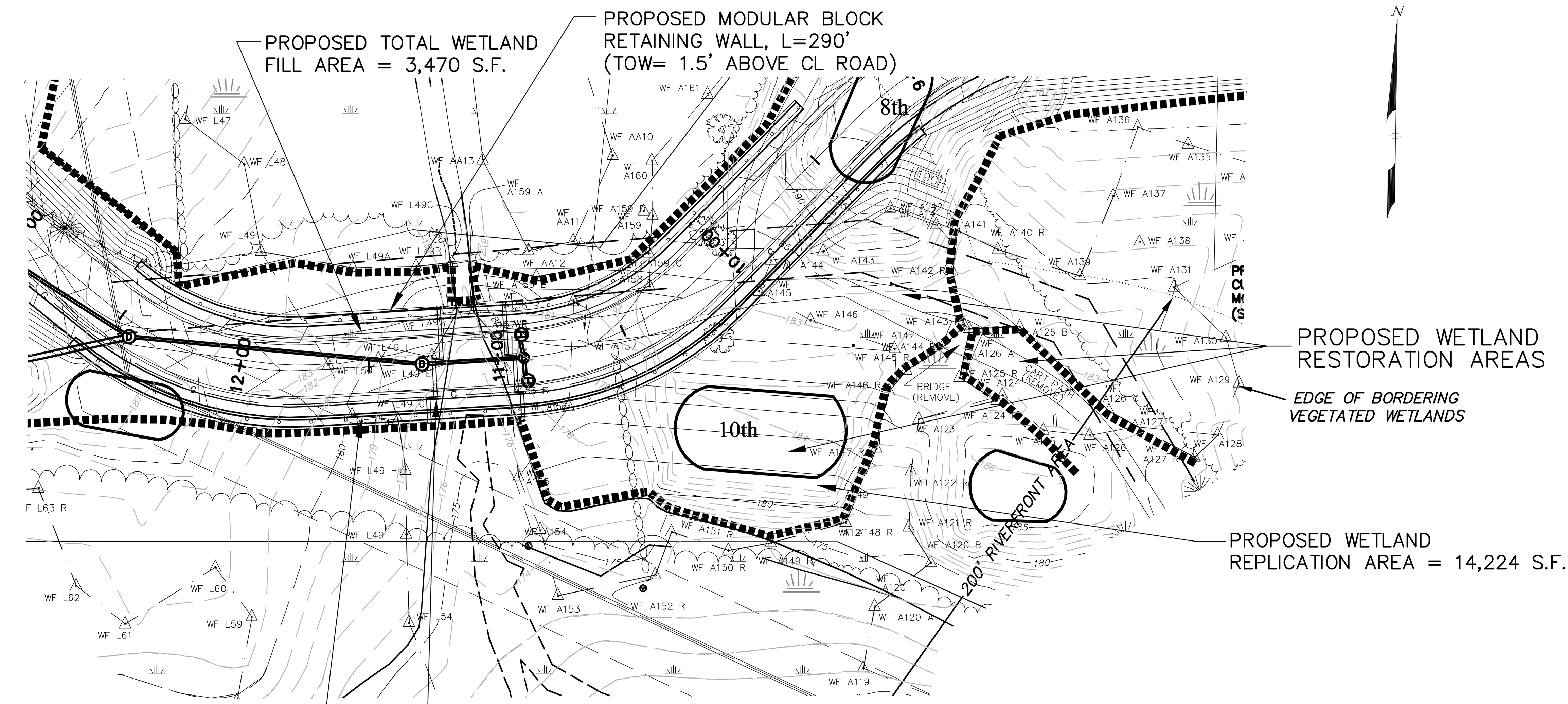

WETLAND CROSSING DETAIL

SCALE: 1"=40'

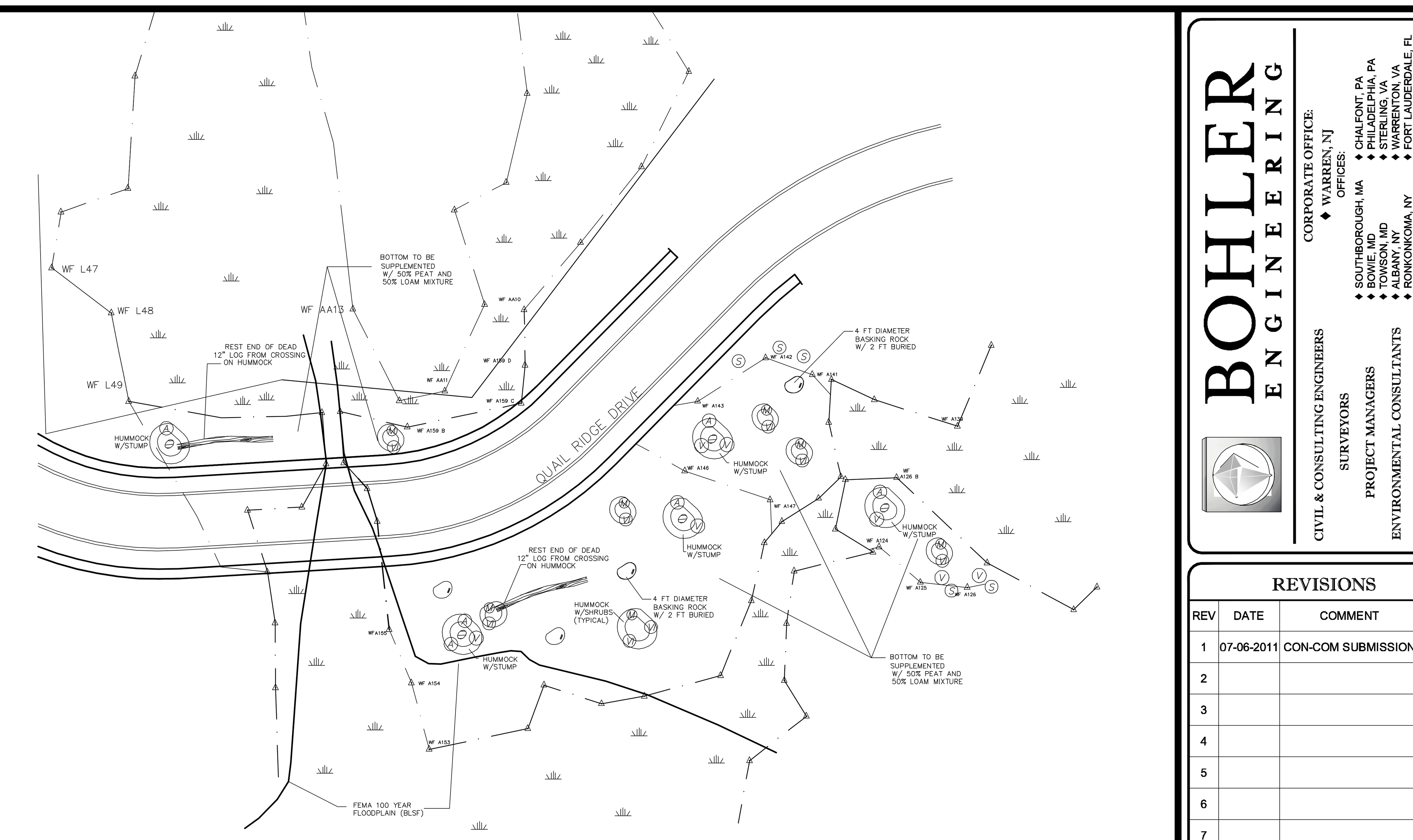

WETLAND REPLICATION PLAN

SCALE: 1"=40'

PLANT LIST

SYMBOL/BOTANICAL NAME	COMMON NAME	NO.	SIZE
SHRUBS			
A/AMELANCHIER LAEVIS	SERVICEBERRY	6	4–5' Ht
V/ILEX VERTICILLATA "WINTER RED"	WINTER RED WINTERBERRY	7	3–4' Ht
S/SALIX DISCOLOR	PUSSY WILLOW	5	2–3' Ht
M/MYRICA PENSYLVANICA	NORTHERN BAYBERRY	7	12–18" Ht
VI/VIBURNUM DENTATUM	ARROWWOOD VIBURNUM	8	12–18" Ht

*SEE LANDSCAPE PLAN FOR SHRUB PLANTING PROCEDURE

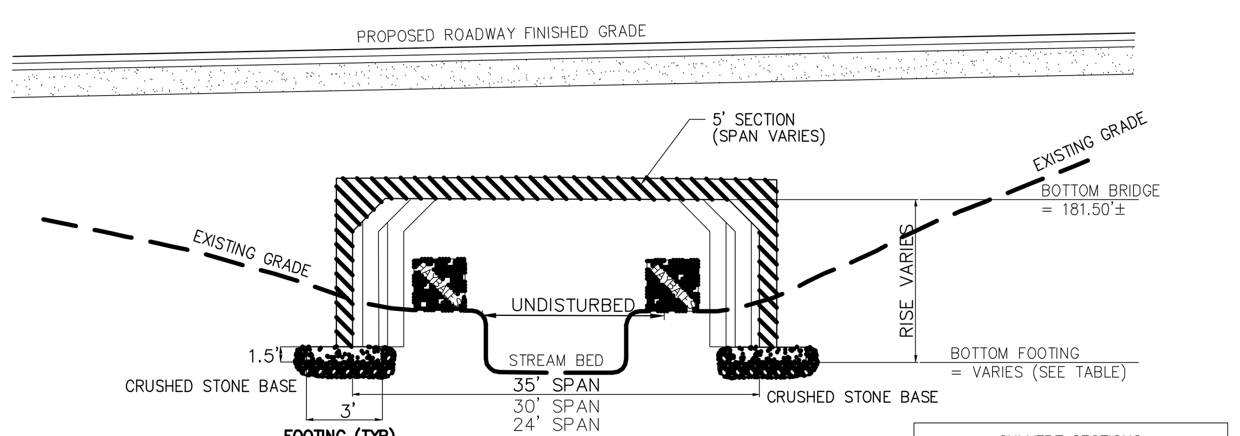

CULVERT SECTIONS			
SPAN	RISE	QUANTITY	BOTTOM FOOTING
35'	7'	2	173.50±
30'	7'	3	173.50±
24'	6'	4	174.50±

OPEN BOTTOM CULVERT CROSS SECTION

NOT TO SCALE

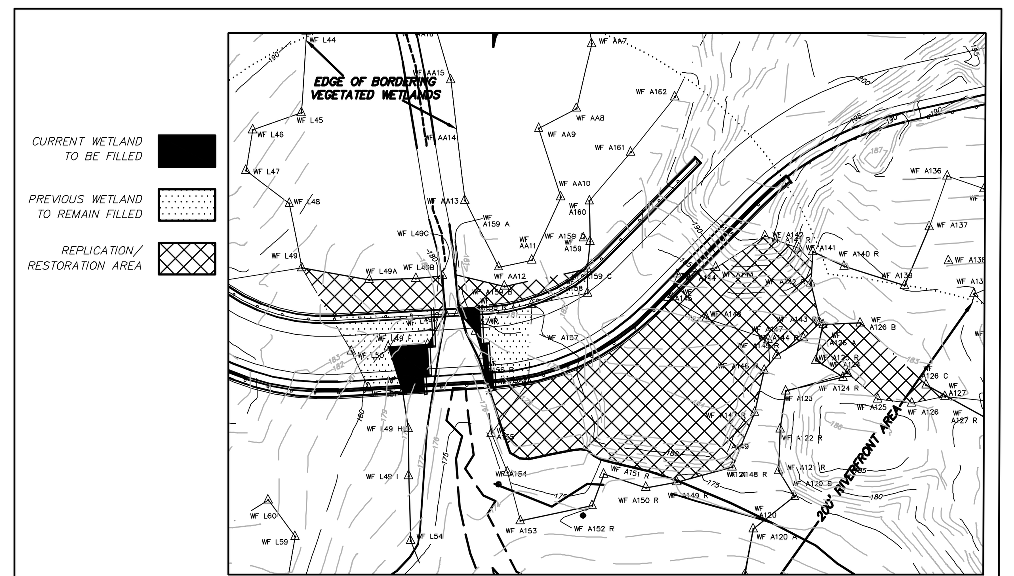

WETLAND REPLICATION/FILL DETAIL

SCALE: 1"=80'

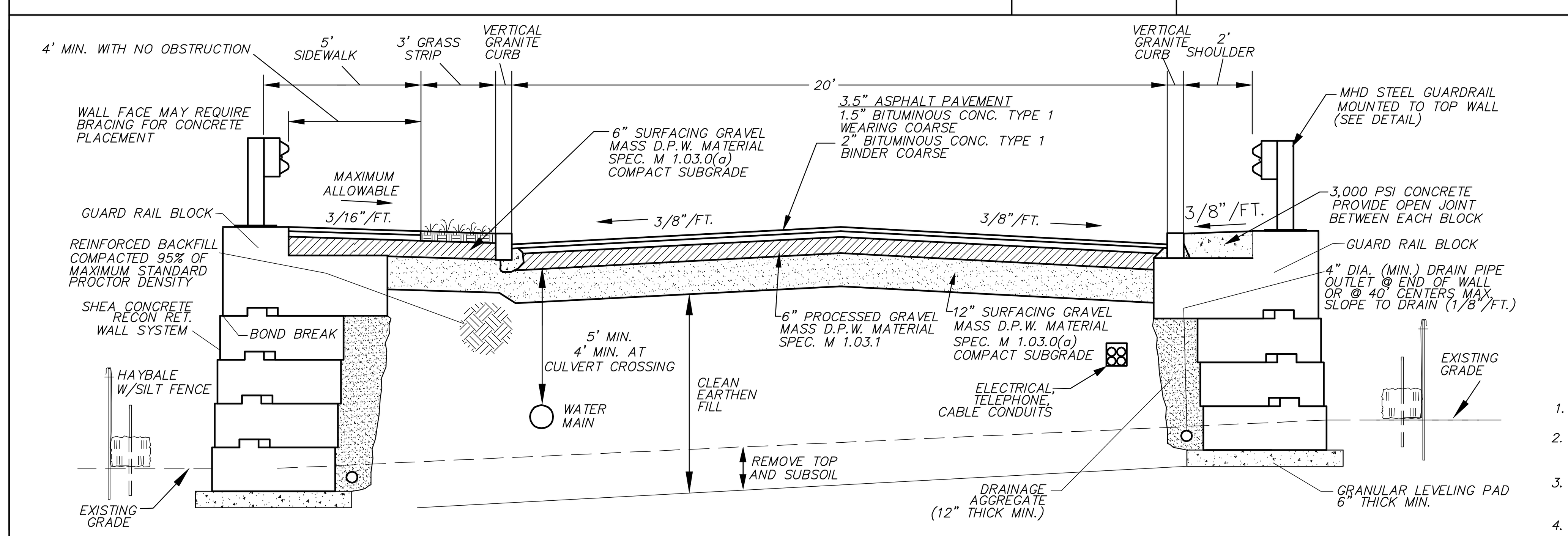

TYPICAL ROADWAY CROSS SECTION STATION 9+15 TO 12+55

NOT TO SCALE

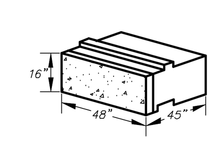

BLOCK DETAIL

NOTES

1. ALL GRAVEL IS TO BE COMPACTED TO 95% MAX. DRY DENSITY.
2. AREA UNDER GRAVEL BASE COURSE TO BE FREE OF ORGANIC MATERIAL, TRASH, ECT. FILL WHERE REQUIRED SHALL CONFORM
3. TO MASS. D.P.W. 1.03.c. 6" MAX. STONE SEE INSTALLATION GUIDE FOR SHEA RECON RET. WALL SYSTEMS.
4. SEE DETAIL SHEET FOR GUARD RAIL INSTALLATION.
5. SEE WETLAND CROSSING SEQUENCE NOTES.

PROCEDURE FOR CONSTRUCTION OF WETLAND REPLICATION AREA

1. INSTALL AND MAINTAIN SILTATION BARRIERS ON THE EDGE OF THE EXISTING WETLAND ADJACENT TO PROPOSED REPLICATION AREA AND ADJACENT TO THE PROPOSED ROADWAY CROSSING OF WETLAND.
2. EXCAVATE AND GRADE THE REPLICATION AREA TO A DEPTH OF APPROXIMATELY ONE FOOT BELOW THE GRADES SHOWN ON THE REPLICATION AREA PLAN.
3. EXCAVATION OF WETLAND AREA TO BE DISTURBED BY ROADWAY CONSTRUCTION SHALL OCCUR AFTER THE REPLICATION WETLAND HAS BEEN EXCAVATED TO SUBGRADE. THE TOPSOIL OR PEAT FROM THE FILL AREA SHALL NOT BE USED IN THE REPLICATION AREA. DO NOT USE VEGETATION FROM FILL AREA IN REPLICATION AREA, AS TO PREVENT THE REPLANTING OF ANY INVASIVE SPECIES THAT MAY BE PRESENT. STOCKPILING OF MATERIAL SHALL BE ALLOWED ONLY TEMPORARILY. FILL REQUIRED TO BRING REPLICATION AREA TO GRADE SHALL BE COMPOSED OF A 50% PEAT AND 50% LOAM MIXTURE.
4. THE REPLICATION AREA SHOULD BE GRADED TO BE LEVEL WITH THE ADJACENT NATURAL WETLAND. HAND LEVELING AND RAKING SHALL BE USED TO AVOID SOIL COMPACTION. ANY POTHOLES OR DEPRESSIONS SHOULD BE FILLED TO AVOID STAGNANT PUDDLES. ANY BERMS RESULTING BETWEEN THE CREATED AND NATURAL WETLANDS SHOULD BE REMOVED TO ALLOW UNRESTRICTED HYDRAULIC CONNECTION.
5. SIDE SLOPES AT THE REPLICATION AREA SHALL NOT EXCEED A 2:1 SLOPE AND SHALL IMMEDIATELY BE LOAMED AND SEEDED. HUMMOCKS, ROCKS, LOGS, STUMPS, MICROPOOL AND PLANTINGS SHALL THEN BE INSTALLED IN ACCORDANCE WITH THE WETLAND REPLICATION PLAN. REPLICATION AREA SHALL BE SEEDED WITH A HYDROPHILIC GRASS MIXTURE OF REDTOP, BLUEJOINT AND SWITCHGRASS, AT A RATE OF 1LB/ PER 1,000 S.F.
6. AFTER THE REPLICATION AREA HAS BEEN CONSTRUCTED, STAKED HAYBALES SHALL BE PLACED BETWEEN THE REPLICATION AREA AND ANY DISTURBED UPLAND AREAS TO PREVENT SILTATION OF THE REPLICATION AREA.
7. THE REPLICATION AREA (EITHER VEGETATED NATURALLY OR WITH COMMERCIALLY PURCHASED SUPPLEMENTS) SHOULD BE INSPECTED AT THE END OF THE FIRST AND SECOND GROWING SEASONS. REPLANTING AND REPAIRS SHOULD BE SCHEDULED AS NEEDED TO PROVIDE ADEQUATE COVER IN ACCORDANCE WITH THE WETLAND REPLICATION PLAN.

CONSTRUCTION SEQUENCE FOR WETLAND CROSSING

1. INSTALL SILTATION BARRIER PRIOR TO THE COMMENCEMENT OF ANY CONSTRUCTION AT ALL LOCATIONS SHOWN ON THE PLAN. SET SILTATION BARRIER LINES IN THE LOCATIONS STAKED BY THE DESIGN ENGINEER.
2. NOTIFY CONSERVATION COMMISSION FORTY-EIGHT HOURS (48) HOURS PRIOR TO STARTING DATE OF CONSTRUCTION.
3. CLEAR AND GRUB AREA WITHIN WETLANDS CROSSING AND DESIGNATED AREA FOR WETLANDS REPLICATION.
4. EXCAVATE MATERIAL WITHIN WETLANDS REPLICATION AREA TO ONE (1) FOOT BELOW GRADES SHOWN ON PLAN. STOCKPILE EXCAVATED MATERIAL OUTSIDE OF THE BUFFER ZONE.
5. STRIP ORGANIC MATERIAL FROM AREA WITHIN WETLANDS CROSSING. DO NOT USE EXCAVATED ORGANIC MATERIAL FROM FILL AREA IN THE WETLANDS REPLICATION AREA TO THE GRADES SHOWN ON THE PLAN. COMPLETE WETLAND REPLICATION AREA IN COMPLIANCE WITH "PROCEDURES FOR CONSTRUCTION OF WETLAND REPLICATION AREA".
6. INSTALL RET-WALLS & CULVERT.
7. PLACE AND COMPACT GRAVEL FILL FOR QUAIL RIDGE DRIVE WITHIN WETLAND CROSSING TO THE GRADES SHOWN ON THE PLAN.
8. STABILIZE SLOPES IN WETLAND FILL AREA WITH 6" OF LOAM AND HYDROSEEDING. INSTALL PROPOSED UNDERGROUND UTILITIES.
10. INSTALL ROADWAY SURFACE TO THE WIDTH SHOWN ON THE PLAN.
11. LOAM AND SEED ALL DISTURBED SURFACES WHICH HAVE NOT BEEN STABILIZED.
12. REMOVE SILTATION BARRIERS AFTER ALL VEGETATION IS ESTABLISHED AND THE APPROVING AUTHORITY HAS ISSUED A CERTIFICATE OF COMPLIANCE.

WETLAND RESTORATION NOTES

1. ENGINEER SHALL STAKE LIMIT OF PREVIOUS WETLAND PRIOR TO ANY WORK.
2. CONTRACTOR SHALL EXCAVATE EXISTING SOIL DOWN TO EXISTING COVERED HYDRIC SOILS. AREA SHALL THEN BE RAKED SMOOTH AND PLANTED IN ACCORDANCE WITH THE WETLAND REPLICATION PLAN.
3. IF AREA WITHIN PREVIOUS WETLAND LIMIT IS COVERED WITH A GRAVEL SIDEWALK, THE GRAVEL SHALL BE EXCAVATED AND REPLACED WITH SOIL CONSISTING OF A 50% PEAT AND 50% LOAM MIXTURE. AREA SHALL SHALL THEN BE PLANTED IN ACCORDANCE WITH THE WETLAND REPLICATION PLAN.
4. IF AREA WITHIN PREVIOUS WETLAND LIMIT IS COVERED WITH A WOODEN BRIDGE, THE BRIDGE SHALL BE DISMANTLED AND REMOVED AND THE PILE FOOTINGS PULLED. ALL FOOTING HOLES SHALL THEN BE FILLLED WITH SOIL CONSISTING OF A 50% PEAT AND 50% LOAM MIXTURE. AREA SHALL THEN BE RAKED SMOOTH AND PLANTED IN ACCORDANCE WITH THE WETLAND REPLICATION PLAN.
5. IF AFTER TWO GROWING SEASONS, THE WETLAND IS NOT RESTABLISHED TO THE SATISFACTION OF THE CONSERVATION COMMISSION, THE AREAS SHALL BE REPLANTED IN ACCORDANCE WITH THE WETLAND REPLICATION PLAN.

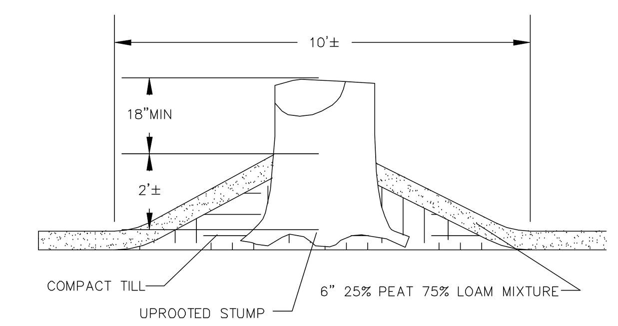

HUMMOCK W/ STUMP

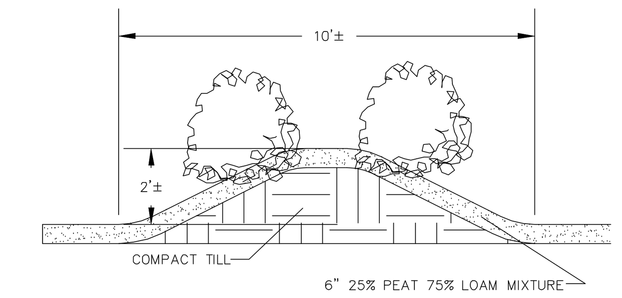

HUMMOCK W/ SHRUBS

N.T.S.

NOTE:

THIS PLAN REFERENCES APPROVED ACTON CONSERVATION APPROVED REPLICATION PLANS ENTITLED

"WETLAND CROSSING AND REPLICATION DETAILS" SHEET 39 OF 44

PREPARED BY STAMSKI AND MCNARY INC., REV 1-16-2009

BOHLER ENGINEERING

CIVIL & CONSULTING ENGINEERS
SURVEYORS
PROJECT MANAGERS
ENVIRONMENTAL CONSULTANTS
LANDSCAPE ARCHITECTS

CORPORATE OFFICE: WARREN, NJ

OFFICES: SOUTHBOROUGH, MA; BOWIE, MD; TOWSON, MD; ALBANY, NY; RONKONKOMA, NY; CENTER VALLEY, PA; CHALFONT, PA; PHILADELPHIA, PA; STERLING, VA; WARRENTON, VA; FORT LAUDERDALE, FL; TAMPA, FL

THE INFORMATION, DESIGN AND CONTENT OF THIS PLAN ARE PROPRIETARY AND SHALL NOT BE COPIED OR USED FOR ANY PURPOSE WITHOUT PRIOR WRITTEN AUTHORIZATION FROM BOHLER ENGINEERING. ONLY APPROVED, SIGNED AND SEALED PLANS SHALL BE UTILIZED FOR CONSTRUCTION PURPOSES. c 2008 BOHLER ENGINEERING.

REVISIONS

REV	DATE	COMMENT	BY
1	07-06-2011	CON-COM SUBMISSION	JAB
2			
3			
4			
5			
6			
7			
8			
9			

STOP - CALL BEFORE YOU DIG!

THE FOLLOWING STATES REQUIRE NOTIFICATION BY EXCAVATORS, DESIGNERS, OR ANY PERSON PREPARING TO DISTURB THE EARTH'S SURFACE ANYWHERE IN THE STATE.
(MA, ME, NH, RI, VT 1-888-344-7233)
(CT 1-800-922-4455)
(NY 1-800-962-7962)

NOT APPROVED FOR CONSTRUCTION

PROJECT No.:	W111022
DRAWN BY:	CFD
CHECKED BY:	JAB/SPD
DATE:	05/23/2011
SCALE:	AS NOTED
CAD I.D.:	w111022ss0_wetland_cfd

PROJECT:

SITE PLAN

FOR

Pulte Homes

THE RESIDENCES AT QUAIL RIDGE

LOCATION OF SITE
354 B GREAT ROAD & SKYLINE DR.
TOWN OF ACTON
MIDDLESEX COUNTY, MA

BOHLER ENGINEERING
352 TURNPIKE ROAD
SOUTHBOROUGH, MA 01772
Phone: (508) 480-9900
Fax: (508) 480-9080
www.BohlerEngineering.com

S.P. DECOURSEY
PROFESSIONAL ENGINEER
MASSACHUSETTS LICENSE No. 36424
NEW HAMPSHIRE LICENSE No. 9308
MAINE LICENSE No. 8408
VERMONT LICENSE No. 7110
CONNECTICUT LICENSE No. 23862
RHODE ISLAND LICENSE No. 7990

SHEET TITLE:

WETLAND CROSSING AND REPLICATION DETAILS

SHEET NUMBER:

37

OF 37

REV 0 - 05/23/2011

P:\11\W111022\DWG\w111022ss0_wetland_cfd.dwg , 37-Wetland Details, 4/23/2010, 10:17:14 AM, jcerkanowicz, XeroX510-1.pc3, User634, 1:1