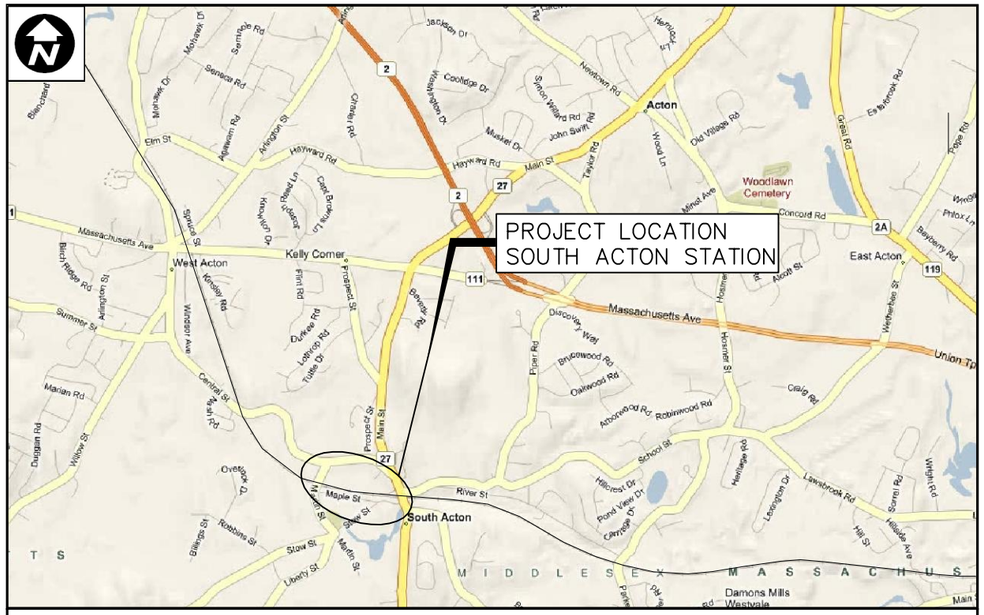

LOCATION PLAN
NOT TO SCALE

SOUTH ACTON COMMUTER RAIL STATION

MASSACHUSETTS BAY TRANSPORTATION AUTHORITY

FITCHBURG COMMUTER RAIL LINE IMPROVEMENT PROJECT
BOSTON TO FITCHBURG, MASSACHUSETTS
CONTRACT NO. G67CN01

SOUTH ACTON STATION CONTRACTOR PACKAGE 90% DESIGN SUBMITTAL

HNTB The HNTB Companies
Engineers Architects Planners

300 APOLLO DRIVE
CHELMSFORD, MASSACHUSETTS 01824

IN ASSOCIATION WITH

JACOBS™ 343 CONGRESS STREET
BOSTON, MA 02110
(617) 242-9222

Lozano, Baskin, and Associates, Inc.
Architecture • Urban Design • City Planning
205 Mt. Auburn St. Watertown, MA 02472

C&C Consulting Engineers, LLC 214 LINCOLN STREET
BOSTON, MA 02134
(617) 254-6930

DEPARTMENT OF TRANSPORTATION
FEDERAL TRANSIT ADMINISTRATION
CAPITAL GRANT CONTRACT MA-XX-X000
PROJECT NO.: XXX

VOLUME 1 OF 1

SEPTEMBER 8, 2011
Plan Numbers XXX to XXX

MBTA APPROVALS:

ACTING ASSISTANT GENERAL MANAGER FOR DESIGN AND CONSTRUCTION
EDMOND F. HUNTER — Date:

DEPUTY DIRECTOR OF DESIGN AND CONSTRUCTION
JAMES E. JACKSON — Date:

FILE NAME: P:\MBTA\2008\E22X37800\CAD\700CADD\702STATIONS\South Acton\Civil\90% Design\ G-1 Cover Sheet.dwg
PLOT DATE: Aug 04, 2011 - 9:43am

INDEX OF DRAWINGS

SHEET NO.	PLAN NO.	TITLE
GENERAL		
G-1		COVER SHEET
G-2		INDEX OF DRAWINGS
G-3		GENERAL NOTES - CIVIL
G-4		ABBREVIATIONS AND LEGEND - CIVIL
G-5		GENERAL NOTES - TRACK
G-6		ABBREVIATIONS AND LEGEND - TRACK
G-7		CURVE DEFINITIONS AND GEOMETRY
MASTER KEY PLAN		
KP-3		KEY PLAN, MP 17 TO MP 25
KP-4		KEY PLAN, MP 26 TO MP 33
SURVEY CONTROL		
SC-2		SURVEY CONTROL POINTS, MASTER SHEET 2
SC-3		SURVEY CONTROL POINTS, MASTER SHEET 3
SC-5		SURVEY CONTROL POINTS, MASTER SHEET 5
SC-101		SURVEY CONTROL POINTS AND TIE DOWN SKETCH, SHEET 1
SC-102		SURVEY CONTROL POINTS AND TIE DOWN SKETCH, SHEET 2
SC-111		SURVEY CONTROL POINTS AND TIE DOWN SKETCH, SHEET 11
SC-136		SURVEY CONTROL POINTS AND TIE DOWN SKETCH, SHEET 36
SC-137		SURVEY CONTROL POINTS AND TIE DOWN SKETCH, SHEET 37
SC-138		SURVEY CONTROL POINTS AND TIE DOWN SKETCH, SHEET 38
SC-139		SURVEY CONTROL POINTS AND TIE DOWN SKETCH, SHEET 39
SC-216		SURVEY CONTROL POINTS AND BASELINE, MP 25 TO MP 26
TRACK		
T-74		TRACK 1 GEOMETRY DATA
T-75		TRACK 2 GEOMETRY DATA
T-76		SOUTH ACTON STATION, TRACK PLAN AND PROFILE, STA. 1307+00 TO STA. 1319+00
T-77		SOUTH ACTON STATION, TRACK PLAN AND PROFILE, STA. 1319+00 TO STA. 1329+00
T-78		SOUTH ACTON STATION, TRACK PLAN AND PROFILE, STA. 1329+00 TO STA. 1341+00
T-79		SOUTH ACTON STATION, TRACK PLAN AND PROFILE, STA. 1341+00 TO STA. 1352+00
T-83		SOUTH ACTON STATION, TRACK 1 PROFILE, STA. 1307+00 TO STA. 1329+00
T-84		SOUTH ACTON STATION, TRACK 1 PROFILE, STA. 1329+00 TO STA. 1352+00
UTILITIES		
U-41		EXISTING UTILITY PLAN, MAIN STREET BRIDGE EASEMENTS (MP. 25.20), ACTON, MA
U-42		EXISTING UTILITY PLAN, RAILROAD STREET (MP. 25.30), ACTON, MA
CIVIL		
C-1		EXISTING CONDITIONS PLAN, SHEET 1 OF 2
C-2		EXISTING CONDITIONS PLAN, SHEET 2 OF 2
C-3		RIGHT OF WAY AND PROPERTY PLAN
C-4		RIGHT OF WAY AND PROPERTY OWNERSHIP DATA
C-5		EROSION CONTROL PLAN
C-6		EROSION CONTROL DETAILS
C-7		DEMOLITION PLAN
C-8		OVERALL SITE PLAN
C-9		SITE PLAN - EAST END
C-10		SITE PLAN - WEST END
C-11		DRAINAGE AND GRADING PLAN-EAST END, SHEET 1 OF 2
C-12		DRAINAGE AND GRADING PLAN-WEST END, SHEET 2 OF 2
C-13		SITE PLAN DETAIL, MAPLE ST. DROP OFF
C-14		SITE PLAN DETAIL, RAILROAD ST. ENTRANCE
C-15		SITE PLAN DETAIL, CENTRAL STREET DROP OFF
C-16		TYPICAL SECTIONS, TRACK BED, SHEET 1 OF 2
C-17		TYPICAL SECTIONS, TRACK BED, SHEET 2 OF 2
C-18 TO C-19		NOT USED
C-20		CROSS SECTIONS, STA. 1326+00 TO 1330+00
C-21		CROSS SECTIONS, STA. 1331+00 TO 1332+00
C-22		CROSS SECTIONS, STA. 1332+50 TO 1334+00
C-23		CROSS SECTIONS, STA. 1335+00 TO 1340+00
C-24		CROSS SECTIONS, STA. 1341+00 TO 1342+00
C-25 TO C-39		NOT USED
C-40		SITE DETAILS, SHEET 1 OF 4
C-41		SITE DETAILS, SHEET 2 OF 4
C-42		SITE DETAILS, SHEET 3 OF 4
C-43		SITE DETAILS, SHEET 4 OF 4
C-44		NOT USED
C-45		DRAINAGE DETAILS, SHEET 1 OF 3
C-46		DRAINAGE DETAILS, SHEET 2 OF 3
C-47		DRAINAGE DETAILS, SHEET 3 OF 3
C-48 TO C-49		NOT USED
C-50		CONSTRUCTION STAGING NOTES
C-51		CONSTRUCTION STAGING PLAN, PHASE 1
C-52		CONSTRUCTION STAGING PLAN, PHASE 2
C-53		CONSTRUCTION STAGING PLAN, PHASE 3
C-54		CONSTRUCTION STAGING PLAN, PHASE 4
C-55		CONSTRUCTION STAGING PLAN, PHASE 5
C-56		CONSTRUCTION STAGING PLAN, PHASE 6

SHEET NO.	PLAN NO.	TITLE
GEOTECHNICAL		
GT-1		BORING LOCATION PLAN
GT-2		BORING LOG, SHEET 1 OF 2
GT-3		BORING LOG, SHEET 2 OF 2
ARCHITECTURAL		
A-0.1		GENERAL NOTES AND SYMBOLS
A-0.2		ABBREVIATIONS
A-1.1		SITE KEY PLAN
A-1.2		ENLARGED SITE PLAN
A-1.3		ENLARGED SITE PLAN
A-1.4		ENLARGED SITE PLAN
A-1.5		ENLARGED SITE PLAN
A-1.6		ENLARGED SITE PLAN
A-2.1		FIRST FLOOR PLAN OUTBOUND HEAD HOUSE
A-2.2		FIRST FLOOR PLAN INBOUND HEAD HOUSE
A-2.3		SECOND FLOOR PLAN OUTBOUND HEAD HOUSE
A-2.4		SECOND FLOOR PLAN INBOUND HEAD HOUSE
A-2.5		ROOF PLAN OUTBOUND HEAD HOUSE
A-2.6		ROOF PLAN INBOUND HEAD HOUSE
A-2.7		PLAN PLATFORM CANOPY
A-3.1		NORTH ELEVATION OUTBOUND HEAD HOUSE
A-3.2		SOUTH ELEVATION OUTBOUND HEAD HOUSE
A-3.3		NORTH ELEVATION INBOUND HEAD HOUSE
A-3.4		SOUTH ELEVATION INBOUND HEAD HOUSE
A-3.5		EAST ELEVATION
A-3.6		WEST ELEVATION
A-3.7		ELEVATION PLATFORM CANOPY
A-4.1		BUILDING SECTIONS OUTBOUND HEAD HOUSE
A-4.2		BUILDING SECTIONS INBOUND HEAD HOUSE
A-4.3		BUILDING SECTIONS
A-4.4		BUILDING SECTIONS
A-4.5		BUILDING SECTIONS
A-4.6		BUILDING SECTIONS
A-4.7		BUILDING SECTIONS
A-4.8		BUILDING SECTIONS
A-4.9		BUILDING SECTIONS
A-4.10		BUILDING SECTIONS
A-4.11		BUILDING SECTIONS
A-4.12		OUTBOUND CANOPY SECTION
A-4.13		INBOUND CANOPY SECTION
A-5.1		DETAILS WALL SYSTEMS
A-5.2		DETAILS WALL SYSTEMS
A-5.3		DETAILS WALL SYSTEMS
A-5.4		DETAILS
A-5.5		DETAILS DOWNSPOUTS AND GUTTER
A-5.6		DETAILS MISCELLANEOUS
A-5.7		GUARD FENCE SCHEDULE
A-5.8		GUARD FENCE SCHEDULE
A-5.9		GUARD FENCE SCHEDULE
A-5.10		GUARD FENCE SCHEDULE
A-5.11		PLANS, ELEVATIONS, EGRESS STAIR AND WALK
A-5.12		SECTIONS, DETAILS, EGRESS STAIR AND WALK
A-5.13		DETAILS, GUARD FENCE AND HANDRAILS
A-5.14		DETAILS, CAMPANILE
A-6.1		SIGN SCHEDULE
A-6.2		SIGN GRAPHICS
A-6.3		SIGN DETAILS TYPE A AND B
A-6.4		SIGN DETAILS TYPE C
A-6.5		SIGN DETAILS TYPE D
A-6.6		SIGN DETAILS TYPE E
A-6.7		SIGN DETAILS TYPE F AND G
A-6.8		SIGN DETAILS MISCELLANEOUS
A-6.9		PAY BOX DETAILS
A-7.1		WINDOW SCHEDULE
A-7.2		WINDOW SCHEDULE
A-7.3		PROTECTIVE SCREEN SCHEDULE
A-7.4		PROTECTIVE SCREEN SCHEDULE
A-7.5		PROTECTIVE SCREEN DETAILS
A-7.6		DETAILS FRAMES
A-7.7		DETAILS FRAMES
A-7.8		DOOR SCHEDULE AND DETAILS
A-8.1		LANDSCAPE PLAN
A-8.2		LANDSCAPE MODULES
A-8.3		LANDSCAPE DETAILS

SHEET NO.	PLAN NO.	TITLE
STRUCTURAL		
S-100		GENERAL STRUCTURAL NOTES SHEET 1
S-101		GENERAL STRUCTURAL NOTES SHEET 2
S-102		KEY PLAN
S-103		FOUNDATION PLAN SHEET 1
S-104		FOUNDATION PLAN SHEET 2
S-105		FOUNDATION PLAN SHEET 3
S-106		PLATFORM LAYOUT PLAN SHEET 1
S-107		PLATFORM LAYOUT PLAN SHEET 2
S-108		PLATFORM LAYOUT PLAN SHEET 3
S-109		MINIPILE DETAILS
S-110		PIER CAP DETAILS SHEET 1
S-111		PIER CAP DETAILS SHEET 2
S-112		PRECAST PLATFORM PANEL DETAILS SHEET 1
S-113		PRECAST PLATFORM PANEL DETAILS SHEET 2
S-114		PRECAST PLATFORM PANEL DETAILS SHEET 3
S-115		PRECAST PLATFORM PANEL DETAILS SHEET 4
S-116		HEAD HOUSES FOUNDATION PLAN
S-117		HEAD HOUSES FOUNDATION DETAILS SHEET 1
S-118		HEAD HOUSES FOUNDATION DETAILS SHEET 2
S-119		HEAD HOUSES LOWER LEVEL AND LOW ROOF FRAMING PLAN
S-120		HEAD HOUSES SECOND FLOOR FRAMING PLAN
S-121		HEAD HOUSES UPPER LEVEL FRAMING PLAN
S-122		HEAD HOUSES HIGH ROOF FRAMING PLAN
S-123		HEAD HOUSES FRAME ELEVATIONS SHEET 1
S-124		HEAD HOUSES FRAME ELEVATIONS SHEET 2
S-125		HEAD HOUSES FRAME ELEVATIONS SHEET 3
S-126		HEAD HOUSES FRAME ELEVATIONS SHEET 4
S-127		HEAD HOUSES FRAME ELEVATIONS SHEET 5
S-128		PEDESTRIAN BRIDGE FRAMING AND SECTIONS
S-129		PEDESTRIAN BRIDGE BEARING DETAILS
S-130		HEAD HOUSES DECK PLAN AND DETAILS
S-131		HEAD HOUSES PRECAST STAIRS ELEVATIONS AND DETAILS
S-132		HEAD HOUSES MASONRY WALL DETAILS
S-133		STEEL DETAILS SHEET 1
S-134		STEEL DETAILS SHEET 2
S-135		STEEL DETAILS SHEET 3
S-136		STEEL DETAILS SHEET 4
S-137		STEEL DETAILS SHEET 5
S-138		STEEL DETAILS SHEET 6
S-139		STEEL DETAILS SHEET 7
S-140		STEEL DETAILS SHEET 8
S-141		INBOUND ACCESS STRUCTURE FROM MAPLE STREET
S-142		OUTBOUND ACCESS RAMP FROM RAILROAD STREET
S-143		OUTBOUND ACCESS RAMP FROM RAILROAD STREET - SECTION
S-144		PLATFORM CANOPY DETAILS SHEET 1
S-145		PLATFORM CANOPY DETAILS SHEET 2
S-146		PLATFORM CANOPY DETAILS SHEET 3
S-147		PLATFORM CANOPY DETAILS SHEET 4
S-148		GENERAL STRUCTURAL DETAILS
ELECTRICAL		
ES-1		ELECTRICAL (EXISTING) CONDITIONS PLAN SHEET 1 OF 2
ES-2		ELECTRICAL (EXISTING) CONDITIONS PLAN SHEET 2 OF 2
E-1		ELECTRICAL SITE PLAN - EAST END SHEET 1 OF 2
E-2		ELECTRICAL SITE PLAN - WEST END SHEET 2 OF 2
E-3		FIRST FLOOR - OUTBOUND HEADHOUSE LIGHTING PLAN
E-4		FIRST FLOOR - INBOUND HEADHOUSE LIGHTING PLAN
E-5		SECOND FLOOR - OUTBOUND HEADHOUSE LIGHTING PLAN
E-6		SECOND FLOOR - INBOUND HEADHOUSE LIGHTING PLAN
E-7		FIRST FLOOR - OUTBOUND HEADHOUSE POWER PLAN
E-8		FIRST FLOOR - INBOUND HEADHOUSE POWER PLAN
E-9		SECOND FLOOR - OUTBOUND HEADHOUSE POWER PLAN
E-10		SECOND FLOOR - OUTBOUND HEADHOUSE POWER PLAN
E-11		OUTBOUND CANOPY LIGHTING PLAN
E-12		INBOUND CANOPY LIGHTING PLAN
E-13		OUTBOUND PLATFORM WIRING
E-14		INBOUND PLATFORM WIRING
E-15		DUCTBANK DETAILS
E-16		ELECTRICAL DETAILS
E-17		LIGHTING SCHEMATIC DIAGRAM - SHEET 1
E-18		LIGHTING SCHEMATIC DIAGRAM - SHEET 2
E-19		LIGHTING SCHEMATIC DIAGRAM - SHEET 3
E-20		ELECTRICAL PANEL SCHEDULES - SHEET 1 OF 2
E-21		ELECTRICAL PANEL SCHEDULES - SHEET 2 OF 2
E-22		ELECTRICAL SERVICE DETAILS
E-23		ONE LINE DIAGRAM & LIGHTING CONTROL
COMMUNICATIONS		
COM-01		TYPICAL COMMUNICATIONS EQUIPMENT SHELTER OUTSIDE VIEWS
COM-02		TYPICAL COMMUNICATIONS EQUIPMENT SHELTER INSIDE VIEWS
COM-03		TYPICAL COMMUNICATIONS EQUIPMENT SHELTER GROUNDING PLAN
COM-04		NOT USED
COM-05		VARIABLE MESSAGE SIGN SYSTEM DIAGRAM
COM-06		COMMUNICATIONS SYSTEM DIAGRAM
COM-07		FIRST FLOOR - OUTBOUND HEAD HOUSE CCTV PLAN
COM-08		FIRST FLOOR - INBOUND HEAD HOUSE CCTV PLAN

90% SUBMITTAL
NOT FOR CONSTRUCTION

MASSACHUSETTS BAY TRANSPORTATION AUTHORITY

FITCHBURG COMMUTER RAIL LINE
IMPROVEMENT PROJECT
CONTRACT NO. G67CN01

SOUTH ACTON STATION
INDEX OF DRAWINGS

ISSUE	DATE	DESCRIPTION	BY	CHKD.	APP.

HNTB
300 APOLLO DRIVE
CHELMSFORD, MA 01824
(978) 905-4000

PROJECT MANAGER Date

JACOBS
343 CONGRESS STREET
BOSTON, MA 02110
(617) 242-9222

MASSACHUSETTS BAY TRANSPORTATION AUTHORITY
APPROVED BY:
PROJECT MANAGER Date

HORIZ: NONE
VERT: NONE
DATE: 9/8/11

DES. BY	DR. BY	CHK. BY
JPB	KMB	JM

PLAN NO.
ISSUE
SHEET G-2

FILE NAME: P:\MBTA\2008\E2X37800\CAD\700CAD0\702STATIONS\South Acton\Civil\90% Design\ G-2 Index of Drawings 90%.dwg
PLOT DATE: Sep 06, 2011 - 5:22pm

GENERAL CIVIL NOTES:

1. THE CONTRACTOR SHALL SET BARRIERS, BARRICADES, WARNING LIGHTS, AND OTHER PROTECTIVE DEVICES THAT ARE NECESSARY, IN THE JUDGMENT OF THE ENGINEER, FOR THE PROTECTION OF THE PUBLIC THROUGHOUT THE STATION AREA, IN ACCORDANCE WITH MBTA ACCESSIBILITY GUIDELINES, MBTA CONSTRUCTION SAFETY MANUAL AND M.U.T.C.D., LATEST EDITIONS.

2. THE CONTRACTOR SHALL VERIFY ALL EXISTING DIMENSIONS AND GRADES IN THE FIELD BEFORE COMMENCING WORK AND PROMPTLY NOTIFY THE ENGINEER OF ANY DISCREPANCIES. WHERE THE INTENT OF THE NEW WORK IS TO MATCH EXISTING CONDITIONS, THE FIELD DATA SHALL GOVERN.

3. EXISTING GRADES SHOWN ON THESE PLANS ARE DERIVED FROM AERIAL PHOTOGRAMMETRY AND THE ACCURACY IS NOT GUARANTEED. ELEVATIONS REFER TO N.A.V.D. 88. WHERE PROPOSED WORK IS TO MEET EXISTING CONDITIONS, THE CONTRACTOR SHALL VERIFY THE INTENDED INTERFACE PRIOR TO ORDERING MATERIALS OR THE START OF CONSTRUCTION OF THAT AREA. PROPOSED GRADES SHALL NOT CREATE FLAT RUN-OFF SURFACES OR SURFACES THAT TRAP WATER. WHERE SUCH A PROBLEM MAY OCCUR, THE CONTRACTOR SHALL NOTIFY THE ENGINEER PRIOR TO CONSTRUCTION OF SUCH.

4. EXISTING UTILITY LINES INDICATED OR NOTED ON THESE DRAWINGS ARE SHOWN AS OBTAINED FROM EXISTING INFORMATION AND ARE ONLY APPROXIMATE IN LOCATION. EXISTING UTILITIES OTHER THAN THOSE INDICATED ON THESE DRAWINGS MAY BE ON THE SITE. THE CONTRACTOR IS WARNED TO PROCEED WITH CAUTION WITH ALL WORK, ESPECIALLY EXCAVATION WORK. THE CONTRACTOR IS TO MAKE ALL POSSIBLE INVESTIGATIONS AS TO POTENTIAL UNMARKED UTILITY LINES BEFORE DESIGNING, EXCAVATING, BLASTING, INSTALLING, BACKFILLING, GRADING, PAVEMENT RESTORATION, OR REPAIRING OF UNDERGROUND SYSTEMS. ALL UTILITY COMPANIES PUBLIC AND PRIVATE MUST BE NOTIFIED, INCLUDING THOSE IN CONTROL OF UTILITIES NOT SHOWN ON THESE DRAWINGS. RAILROAD UNDERGROUND AND OVERHEAD CABLES ARE ALSO IN THE AREA OF THE CONTRACTOR'S CONSTRUCTION ACTIVITIES. THE LOCATION, PROTECTION, REMOVAL OR RELOCATION OF THESE CABLES MUST BE COORDINATED WITH THE RAILROAD OWNERS AND MBTA OPERATING CONTRACTORS BEFORE EXCAVATION IS STARTED. THE CONTRACTOR SHALL BE RESPONSIBLE FOR DETERMINING THE EXACT LOCATION OF ALL UTILITIES WITHIN THE PROJECT AREA AND COORDINATE WITH THE AFFECTED UTILITY OWNER FOR PROTECTION OR RELOCATION OF UTILITY PRIOR TO THE START OF THEIR CONSTRUCTION ACTIVITIES. THE CONTRACTOR SHALL NOTIFY DIG-SAFE AT LEAST 72 BUSINESS HOURS BEFORE ANY CONSTRUCTION BEGINS AT 1-888-344-7233. THE ENGINEER ASSUMES NO RESPONSIBILITY FOR DAMAGES INCURRED AS A RESULT OF UTILITIES OMITTED OR INACCURATELY SHOWN. SEE ADDTIONAL UTILITY RELATED NOTES ON THIS PAGE.

5. ALL ITEMS DESIGNATED AS "REMOVE" AND NOT RELOCATED AS PART OF THIS PROJECT, AND DETERMINED TO BE IN SALVAGEABLE CONDITION BY THE ENGINEER, SHALL BE DELIVERED TO MBTA RAILROAD OPERATIONS MATERIAL YARD IN CHARLESTOWN, MA, UNLESS OTHERWISE DIRECTED BY THE ENGINEER. NO DELIVERY WILL BE GREATER THAN 60 MILES, ONE WAY. WHERE ITEMS TO BE REMOVED ARE OWNED BY THE TOWN OF ACTON APPROPRIATE NOTICE TO THE TOWN SHALL BE MADE PRIOR TO DISPOSAL.

6. THE CONTRACTOR SHALL BE RESPONSIBLE FOR LEASING OR OTHERWISE OBTAINING TEMPORARY RIGHTS TO LANDS NOT ALREADY GRANTED EASEMENT RIGHTS BUT DEEMED NECESSARY FOR USE FOR CONSTRUCTION STAGING AND/OR STORING CONSTRUCTION MATERIALS AND EQUIPMENT. SEE RIGHT OF WAY AND PROPERTY PLAN FOR DESIGNATED EASEMENT AREAS.

7. THE CONTRACTOR SHALL COORDINATE ALL CONSTRUCTION ACTIVITIES WITH THE APPROPRIATE AGENCIES OF THE TOWN OF ACTON IN AN EFFORT TO AVOID CONSTRUCTION RELATED IMPACTS TO THE ADJACENT AND ADJOINING AREAS.

8. CONTRACTOR WILL NOT BE ALLOWED TO WORK WITHIN THE "FOUL" AREA OF THE RAILROAD (15 FEET FROM CENTERLINE OF TRACK) WITHOUT FLAGMEN AND/OR TRACK FOREMEN PRESENT FROM THE OPERATING RAILROAD. CONTRACTOR SHALL COORDINATE WITH MBTA RAILROAD OPERATIONS AND MBCR FOR WORK REQUIREMENTS AND RESTRICTIONS.

9. ADDITIONAL NOTES ARE INDICATED ON THE VARIOUS CIVIL, ARCHITECTURAL, STRUCTURAL, ELECTRICAL, AND COMMUNICATIONS PLANS INCLUDED HEREIN.

10. FOR PROJECT-WIDE PURPOSES ON THESE CORRIDOR IMPROVEMENTS, DRAWINGS WILL BE ORIENTED WITH FITCHBURG MAIN LINE BASELINE STATIONING INCREASING FROM LEFT-TO-RIGHT AND THEREFORE IN MOST ALL CASES NORTH WILL BE DIRECTED DOWN.

11. CONTRACTOR SHALL BE RESPONSIBLE FOR OBTAINING ALL NECESSARY STATE AND LOCAL PERMITS (INCLUDING INSPECTIONS AND SIGN-OFFS FROM APPLICABLE TOWN DEPARTMENTS) FOR THE CONSTRUCTION OF SOUTH ACTON STATION.

12. CONTRACTOR SHALL CONTAIN ALL EXCAVATION, EROSION AND SEDIMENTS FROM FOULING TRACKWAYS, WETLANDS, PATHWAYS, PARKING LOTS, PLATFORMS, STREETS, CATCHMENT SYSTEMS AND PRIVATE PROPERTIES THROUGHOUT CONSTRUCTION. SEE SPECIFICATIONS AND EROSION & SEDIMENTATION CONTROL PLANS FOR DETAILS.

13. MAINTAIN ACCESS TO AND OPERATIONS OVER ALL TOWN AND PRIVATE WAYS THROUGHOUT CONSTRUCTION.

UTILITY NOTES:

1. MAINTAIN AND PROTECT ELECTRIC, SIGNAL, COMMUNICATION, PHONE, SEWER AND DRAINAGE SYSTEMS THROUGHOUT CONSTRUCTION. CONTRACTOR TO SUBMIT UTILITY RELOCATION, ABANDONMENT AND PHASING PLAN THAT IS COORDINATED AND APPROVED BY THE RESPECTIVE PUBLIC AND PRIVATE UTILITY JURISDICTIONS FOR ENGINEER'S APPROVAL.

2. RELOCATE ALL MBTA-RELATED ELECTRIC, SIGNAL AND COMMUNICATION SYSTEMS TO UNDERGROUND CONDUITS AND DUCTBANKS THROUGH THE STATION SITE AS INDICATED. REMOVE AND DELIVER TO MBTA OR TOWN OF ACTON, ALL ABANDONED POLES, LINES, CABINETS, EQUIPMENT AND SUPPORTS WHEN EACH RELOCATION IS COMPLETE. CONTRACTOR SHALL BE RESPONSIBLE TO REMOVE AND DISPOSE OF ALL MATERIALS NOT CLAIMED BY THE MBTA OR TOWN OF ACTON.

3. COORDINATE PUBLIC AND PRIVATE UTILITY ABANDONMENTS AND IMPROVEMENTS WITH ALL OTHER PROPOSED STATION AND TRACKWAY IMPROVEMENT WORK INDICATED IN THESE DOCUMENTS. OBTAIN THE RESPECTIVE PUBLIC AND PRIVATE UTILITY JURISDICTION APPROVALS FOR THIS WORK PRIOR TO THE STAGING PLAN SUBMITTAL AND PRIOR TO WORK. INCLUDE ALL UTILITY WORK WITH THE CONSTRUCTION STAGING PLAN SUBMITTAL. SEE CONSTRUCTION STAGING PLANS FOR ADDITIONAL NOTES.

4. THE EXISTING WATER LINE LOCATION AND PROPOSED CONNECTION POINT IN RAILROAD STREET SHALL BE VERIFIED AND APPROVED BY THE ACTON WATER DISTRICT. THE PROPOSED WATER LINE SHALL INCLUDE A METER PIT AND YARD HYDRANTS AT EACH PROPOSED PLATFORM. PROTECT THE WATER LINE WHERE IT CROSSES UNDER THE TRACKS WITH A DUCTILE IRON PIPE SLEEVE AS INDICATED ON MBTA STANDARD PLAN NO. 1014.

5. MAINTAIN SITE LIGHTING WITHIN THE LIMITS OF WORK THROUGHOUT CONSTRUCTION IN ACCORDANCE WITH THE CONSTRUCTION STAGING PLANS AND AS SPECIFIED IN THESE DOCUMENTS. SHIELD AS APPROPRIATE, CONSTRUCTION LIGHTING FROM ADJACENT PROPERTIES THROUGHOUT CONSTRUCTION.

90% SUBMITTAL
NOT FOR CONSTRUCTION

FILE NAME: P:\MBTA\2008\E22X37800\CAD\700CADD\702STATIONS\South Acton\Civil\90% Design\ G-3 General Notes - Civil.dwg
PLOT DATE: Sep 06, 2011 - 2:05pm

ISSUE	DATE	DESCRIPTION	BY	CHKD.	APP.

JACOBS
343 CONGRESS STREET
BOSTON, MA 02110
(617) 242-9222

MASSACHUSETTS BAY TRANSPORTATION AUTHORITY

FITCHBURG COMMUTER RAIL LINE
IMPROVEMENT PROJECT
CONTRACT NO. G67CN01

SOUTH ACTON STATION
GENERAL NOTES – CIVIL

HNTB
300 APOLLO DRIVE
CHELMSFORD, MA 01824
(978) 905-4000

PROJECT MANAGER Date

MASSACHUSETTS BAY TRANSPORTATION AUTHORITY
APPROVED BY:
PROJECT MANAGER Date

HORIZ: NONE	DES. BY	DR. BY	CHK. BY	PLAN NO.	ISSUE
VERT: NONE	JPB	KMB	JM		
DATE: 9/8/11				SHEET G-3	

LEGEND

EXISTING		PROPOSED
CB	CATCH BASIN	CB
CBCI	CATCH BASIN w/CURB INLET	CBCI
DI	DROP INLET	DI
Ⓓ	MANHOLE DRAINAGE	Ⓓ
Ⓔ	MANHOLE ELECTRIC	Ⓔ
MH?	MANHOLE UNKNOWN	
Ⓢ	MANHOLE SEWER	Ⓢ
Ⓣ	MANHOLE TELEPHONE	Ⓣ
Ⓒ	MANHOLE CABLE	Ⓒ
HH	HANDHOLE	HH
MHD	MASS HIGHWAY DEPT. HANDHOLE	MHD
DPW	DEPT. OF PUBLIC WORKS HANDHOLE	DPW
GG	GAS GATE	GG
WG	WATER GATE	WG
G?	GATE UNKNOWN	
☼	LIGHT POLE	☼
UP	UTILITY POLE	UP
UPL	UTILITY POLE w/ LIGHT POLE	UPL
SGN	SIGN	SGN
▷	WETLAND FLAG	▷
	HYDRANT	
	FLAG POLE	
GW	GUY WIRE	GW
GP	GUY POLE	GP
SB	STONE BOUND	SB
SBDH	STONE BOUND w/ DRILL HOLE	SBDH
DH	DRILL HOLE	DH
GM	GAS METER	GM
MB	MAILBOX	MB
TEL	TELEPHONE	TEL
TS	TRAFFIC SIGNAL	TS
B-7	SOIL BORING LOCATION (TYP)	

EXISTING		PROPOSED
FA	FIRE ALARM	FA
WB	WASTE BASKET	WB
12"	TREE (w/ DIA)	12"
OHW	OVERHEAD WIRES	OHW
UGASLN-E	UNDERGROUND GAS LINE	UGASLN-P
UWLN-E	UNDERGROUND WATER LINE	UWLN-P
HCR	HANDICAPPED RAMP	HCR
CSW	CONCRETE SIDEWALK	CSW
BCSW	BIT. CONC. SIDEWALK	BCSW
BCC	BIT. CONC. CURB	BCC
BCB	BIT CONC. BERM	BCB
CCB	CAPE COD BERM	CCB
GC	GRANITE CURB	GC
EOP	EDGE OF PAVEMENT	EOP
CS○	CROSSING SIGNAL	CS○
CSG○	CROSSING SIGNAL w/ GATE	CSG○
CS-PG○	CROSSING SIGNAL w/ PED. GATE	CS-PG○
CG○	CROSSING GATE ONLY (NO SIGNAL)	CG○
STK	STAKE (PROPERTY LINE MARKER)	STK
○ BOL	BOLLARD	○ BOL
○ X-ING	RAILROAD CROSSING SIGN	○ X-ING
CP	CONCRETE PAD	CP
SCB	SIGNAL CONTROL BOX	SCB
ELB	ELECTRIC BOX	ELB
MP	MILEPOST	MP
	GUARD RAIL	
	STONE WALL	
	PROPERTY LINE	
	LIMIT OF WORK	
	RETAINING WALL	
× 190.40	SPOT GRADE (LOCATION OF ELEVATION)	× 190.40

ABBREVIATIONS

AHD	AHEAD
ASTM	AMERICAN SOCIETY FOR TESTING & MATERIALS
APPROX.	APPROXIMATE
BIT.	BITUMINOUS
BL	BASELINE
BOT.	BOTTOM
BR	BRIDGE
BK	BACK
CB	CATCH BASIN
>	CENTER LINE
CIP	CAST IRON PIPE
CLF	CHAIN LINK FENCE
CMP	CORRUGATED METAL PIPE
COMM.	COMMUNICATION
CONC.	CONCRETE
CONST.	CONSTRUCTION
CP	CONCRETE PAD
C&S	COMMUNICATION & SIGNAL
CULV.	CULVERT
DH	DRILL HOLE
DIA.	DIAMETER
DMH	DRAIN MANHOLE
EL	ELEVATION
ELEV	ELEVATION
EQN	STATION EQUATION
EXIST	EXISTING
FT	FOOT
GGR	GAS GATE GROUND
HDPE	HIGH DENSITY POLYETHYLENE
HH	HAND HOLE
HORIZ.	HORIZONTAL
INV	INVERT
LH	LEFT HAND TURNOUT
MAX	MAXIMUM
MBCR	MASSACHUSETTS BAY COMMUTER RAIL
MBTA	MASSACHUSETTS BAY TRANSPORTATION AUTHORITY
MIN	MINIMUM
M.O.W.	MAINTENANCE OF WAY
MP	MILE POST
MPH	MILES PER HOUR
N.A.V.D	NORTH AMERICAN VERTICAL DATUM
NIC	NOT IN CONTRACT
NO.	NUMBER
N.T.S.	NOT TO SCALE
O.C.	ON CENTER
O.D.	OUTSIDE DIAMETER
O.H./OH	OVER HEAD BRIDGE
OTM	OTHER TRACK MATERIALS
PCMP	PERFORATED CORRUGATED METAL PIPE
PK/NL	PARKER-KALON COMPANY NAIL
P.S.I.	POUNDS PER SQUARE INCH
PROP	PROPOSED
PVC	POLYVINYL CHLORIDE
RCP	REINFORCED CONCRETE PIP
R/W	RIGHT OF WAY
RH	RIGHT HAND TURNOUT
ROW	RIGHT OF WAY
RR SPK	RAILROAD SPIKE
RT.	RIGHT
RTE	ROUTE
SBC	STONE BOX CULVERT
SF	SQUARE FEET
SMH	SEWER MANHOLE
ST.	STREET
STA/STA.	STATION
STK/NL	STAKE NAIL
SWPPP	STORMWATER POLLUTION PREVENTION PLANS
T.C.	TRACK CENTER
T/R-T.O.R.	TOP OF RAIL
TBR	TO BE REMOVED
TYP.	TYPICAL
TRK	TRACK
UD	UNDERDRAIN
WET	WETLAND

90% SUBMITTAL
NOT FOR CONSTRUCTION

NOTE:
THIS LEGEND PERTAINS GENERALLY TO ALL "C" (CIVIL) DRAWINGS.

FILE NAME: P:\MBTA\2008\E2X37800\CAD\700CADD\702STATIONS\South Acton\civil\90% Design\ G-4 Abbrv & Legend.dwg
PLOT DATE: Sep 01, 2011 - 10:37am

MASSACHUSETTS BAY TRANSPORTATION AUTHORITY
FITCHBURG COMMUTER RAIL LINE
IMPROVEMENT PROJECT
CONTRACT NO. G67CN01

SOUTH ACTON STATION
ABBREVIATIONS AND LEGEND – CIVIL

ISSUE	DATE	DESCRIPTION	BY	CHKD.	APP.

HNTB 300 APOLLO DRIVE CHELMSFORD, MA 01824 (978) 905-4000
PROJECT MANAGER Date

MASSACHUSETTS BAY TRANSPORTATION AUTHORITY
APPROVED BY:
PROJECT MANAGER Date

JACOBS 343 CONGRESS STREET BOSTON, MA 02110 (617) 242-9222

HORIZ: NONE	DES. BY	DR. BY	CHK. BY	PLAN NO.	ISSUE
VERT: NONE	JPB	KMB	JM		
DATE: 9/8/11				SHEET G-4	

GENERAL NOTES

1. SURVEY BASELINE DATA PREPARED BY ASEC CORPORATION, BOSTON, MA.

2. VERTICAL SURVEY CONTROL DATUM IS BASED ON N.G.V.D. OF 1929. PLAN GRID SYSTEM IS BASED ON MASSACHUSETTS COORDINATE SYSTEM ACT OF 1941 - CHAPTER 47 - MAINLAND ZONE.

3. FOR BENCHMARKS SEE SHEETS SC-101 TO SC-156.

4. FOR BORING DATA SEE GEOTECHNICAL DATA REPORT

5. TOPOGRAPHIC AND EXISTING UTILITIES AS SHOWN ON THE CONTRACT DRAWINGS ARE A COMPOSITE OF AERIAL PHOTOGRAMMETRY BY FLI-MAP (JOHN CHANCE LAND SURVEYS, INC., FIELD SURVEY BY ASEC CORPORATION AND UTILITY DATA PROVIDED BY UTILITY COMPANIES.

6. THE INFORMATION SHOWN ON THE DRAWINGS CONCERNING TYPE AND LOCATION OF UNDERGROUND UTILITIES IS NOT GUARANTEED TO BE ACCURATE OR ALL INCLUSIVE. THE CONTRACTOR IS RESPONSIBLE FOR MAKING HIS OR HER OWN DETERMINATION AS TO THE TYPE AND LOCATION OF UNDERGROUND UTILITIES AS MAY BE NECESSARY TO AVOID DAMAGE THERETO.

7. ALL EXISTING UTILITIES SHALL BE MAINTAINED IN PLACE AND KEPT OPERATIONAL DURING CONSTRUCTION EXCEPT AS NOTED ON THE CONTRACT DRAWINGS. ANY NECESSARY DISRUPTION TO OR ABANDONMENT OF EXISTING UTILITIES SHALL BE SUBJECT TO THE APPROVAL OF THE ENGINEER.

8. IT SHALL BE THE RESPONSIBILITY OF THE CONTRACTOR TO NOTIFY ALL UTILITY COMPANIES AND CITIES/TOWNS THAT MAY BE AFFECTED BY ANY PORTION OF THIS CONSTRUCTION AND TO COORDINATE ALL WORK INVOLVING UTILITY COMPANY OR CITY/TOWN FACILITIES, WHETHER THOSE FACILITIES BE EXISTING OR PROPOSED. IT IS ALSO THE RESPONSIBILITY OF THE CONTRACTOR TO SUPPORT AND PROTECT EXISTING UTILITIES IN AND AROUND EXCAVATIONS, AND IN PARTICULAR, WHEN CROSSING UNDER OR OVER ANY DUCT OR PIPE. ALL PROTECTIVE MEASURES OR SUPPORTS SHALL BE CONSIDERED INCIDENTAL WORK AND SHALL BE INCLUDED IN THE UNIT PRICE BID FOR THE ITEM BEING INSTALLED.

9. IF A STRUCTURE TO BE ABANDONED IS FOUND TO HAVE ADDITIONAL INLET PIPES OF UNKNOWN ORIGIN, OTHER THAN THOSE SHOWN, THE CONTRACTOR SHALL NOTIFY THE ENGINEER IMMEDIATELY TO DETERMINE DISPOSITION, PRIOR TO PERFORMING ANY WORK ON THE STRUCTURE.

10. EXISTING UTILITY OR DRAINAGE FACILITIES CALLED FOR TO BE RELOCATED, RECONSTRUCTED, REMOVED, OR ABANDONED SHALL BE VERIFIED WITH THE RESPECTIVE CONTROLLING AUTHORITY AS TO THEIR FINAL DISPOSITION.

11. ALL ABOVE GRADE STRUCTURES, POLES, TRANSFORMERS, ETC. TO BE RELOCATED SHALL BE PLACED AT THE REQUIRED M.B.T.A. STANDARD CLEARANCE FROM THE CENTERLINE OF ANY TRACK.

12. ALL UTILITY SURFACE CASTINGS (COVERS, GRATES, GATE BOXES, ETC.) TO REMAIN, SHALL BE ADJUSTED TO THE NEW SURFACE GRADE AS REQUIRED, WHETHER OR NOT CALLED FOR IN THE PLANS.

13. THE CONTRACTOR SHALL VERIFY ALL HORIZONTAL STATIONS AND OFFSETS AND ALL VERTICAL ELEVATIONS OF PROPOSED WORK PRIOR TO THE START OF CONSTRUCTION.

14. UNLESS OTHERWISE NOTED ON THE DRAWINGS, THE CONTRACTOR SHALL REMOVE AND STACK AT LOCATIONS DESIGNATED IN THE SPECIFICATIONS ALL EXISTING TRACK, RAILROAD SIGNAL EQUIPMENT, RAILROAD POLE LINE, AND ALL OTHER RAILROAD EQUIPMENT WITHIN THE M.B.T.A RIGHT-OF-WAY. THE CONTRACTOR SHALL VERIFY ALL ITEMS FOR REMOVAL WITH THE ENGINEER PRIOR TO ANY WORK.

15. UNLESS OTHERWISE NOTED ON THE CONTRACT DRAWINGS OR DIRECTED BY THE ENGINEER, EXISTING FENCES AND STONE WALLS ALONG THE M.B.T.A. RIGHT-OF-WAY LINES SHALL REMAIN.

16. UNLESS OTHERWISE NOTED ON THE CONTRACT DRAWINGS OR DIRECTED BY THE ENGINEER, STRUCTURES ENCROACHING ON THE M.B.T.A. RIGHT-OF-WAY SHALL REMAIN OR BE REMOVED BY THE PROPERTY OWNER.

17. WORK LABELED 'PROP' IS WORK TO BE COMPLETED UNDER THIS CONTRACT OR BY OTHERS DURING THE CONTRACT DURATION. WORK LABELED 'FUTURE' IS WORK TO BE DONE AT A LATER DATE AND IS NOT PART OF THIS CONTRACT.

18. PROFILE GRADE LINE IS THE TOP OF LOW RAIL IN ALL CASES.

19. ALL WORK SHALL BE IN ACCORDANCE WITH MW-1, M.B.T.A. CONSTRUCTION STANDARDS AND THE M.B.T.A. RAILROAD OPERATIONS BOOK OF STANDARD PLANS DATED JANUARY 5, 1996 AND THE LATEST REVISIONS UNLESS OTHERWISE NOTED ON THE CONTRACT DRAWINGS OR SPECIFICATIONS.

20. DITCH AND SUBDRAIN SLOPES SHALL BE GRADED CONTINUOUSLY AND EVENLY BETWEEN THE INVERT ELEVATIONS SHOWN ON THE PLANS.

21. THE WORK SHALL BE COORDINATED WITH PAN AM RAIL AND M.B.T.A. WEEKDAY FREIGHT TRAINS AND M.B.T.A. COMMUTER RAIL SERVICE WILL CONTINUE TO OPERATE ON SCHEDULES ALTERED TO PROVIDE WORK WINDOWS.

22. PROVIDE SNOW FLANGER SIGNS AND SIGN POSTS PER M.B.T.A. STANDARD DRAWING NO. 3304 AT ALL GRADE CROSSINGS, TURNOUTS, UNDERGRADE BRIDGES (EXCEPT ARCH BRIDGES), PLATFORMS, AND AT OTHER LOCATIONS AS DIRECTED BY THE ENGINEER.

23. PROVIDE MILEPOST SIGNS PER MBTA STANDARD DRAWING NO. 3302 AT ALL GRADE CROSSINGS, BRIDGES, CULVERTS, AND INTERLOCKINGS. SIGNS AT CULVERTS HAVE NOT BEEN CALLED OUT ON THE DRAWINGS.

24. WHISTLE POSTS, REPEAT WHISTLE POSTS, AND SPEED RESTRICTION SIGNS INDICATED ON THE DRAWINGS ON THE LEFT SIDE OF THE PROPOSED TRACK(S) SHALL BE INSTALLED FACING WESTERLY. THOSE ON THE RIGHT SIDE SHALL BE INSTALLED FACING EASTERLY.

25. ADJUST INDUSTRIAL SIDING ALIGNMENTS AND PROFILES AS DIRECTED OR APPROVED BY THE ENGINEER TO MEET EXISTING TRACK.

26. ALL EXISTING U.S.G.S. DISKS, HIGHWAY BOUNDS, RAILROAD MONUMENTS, PROPERTY BOUNDS, AND TOWN BOUNDS SHALL BE PROTECTED AND RAISED TO FINISHED GRADE AS REQUIRED. U.S.G.S. DISKS AND TOWN BOUNDS WILL BE ADJUSTED BY U.S.G.S. AND M.H.D. RESPECTIVELY. ANY DAMAGE TO U.S.G.S. DISKS SHALL BE IMMEDIATELY REPORTED TO THE ENGINEER AND THE U.S. GEOLOGICAL SURVEY AND SHALL BE REPAIRED AT NO COST TO THE AUTHORITY. ANY DAMAGE TO TOWN BOUNDS SHALL BE IMMEDIATELY REPORTED TO THE ENGINEER AND M.H.D. AND SHALL BE REPAIRED AT NO COST TO THE AUTHORITY. THE CONTRACTOR SHALL INVENTORY ALL SUCH BOUNDS, DISKS, AND MONUMENTS PRIOR TO THE START OF ANY WORK.

27. ALL CROSS SECTIONS HAVE BEEN DRAWN AS WOOD TIE SECTIONS. IF REQUIRED INSTALL CONCRETE TIES AT LOCATIONS NOTED ON THE MATERIAL LOCATION PLANS IN ACCORDANCE WITH THE TYPICAL SECTIONS FOR CONCRETE TIE TRACK MAINTAINING THE PROPOSED TOP OF RAIL INDICATED ON THE PROFILES.

28. ALL CROSS SECTIONS DRAWN WITH NO SUPERELEVATION. CONSTRUCT SECTIONS ON CURVES AND SPIRALS IN ACCORDANCE WITH THE TYPICAL SECTIONS FOR CURVED TRACK.

29. THE CONTRACTOR SHALL COORDINATE WITH CITY/TOWN OFFICIALS AND SHALL PREPARE A TRAFFIC MAINTENANCE PLAN TO BE SUBMITTED TO THE ENGINEER FOR APPROVAL FOR EACH GRADE CROSSING PRIOR TO BEGINNING WORK.

30. HORIZONTAL CLEARANCES SHOWN ON THE CONTRACT DRAWINGS ARE THE MINIMUM CLEARANCE FOR EACH STRUCTURE. VERTICAL CLEARANCES SHALL BE MEASURED IN ACCORDANCE WITH M.B.T.A STANDARD PLAN NO. 1016.

31. THE CONTRACTOR SHALL CLEAN AND REMOVE ALL DEBRIS, SAND, AND OTHER MATERIAL FROM ALL CATCH BASIS, MANHOLES, AND DRAIN PIPES THAT ARE WITHIN THE LIMITS OF WORK INCLUDING ALL ROADWAY AND GRADE CROSSING DRAINAGE STRUCTURES.

32. ALL TEMPORARY CONSTRUCTION EASEMENT AREAS DISTURBED BY CONSTRUCTION SHALL BE RESTORED TO THE ORIGINAL CONDITIONS UNLESS OTHERWISE NOTED.

33. IT IS THE CONTRACTOR'S RESPONSIBILITY TO COORDINATE THE VARIOUS ASPECTS OF THESE DOCUMENTS. ANY PARTIAL USE OF THESE DOCUMENTS IS AT THE RISK OF THE CONTRCTOR.

34. RIGHT-OF-WAY IS APPROXIMATE AND SCALED FROM AVAILABLE VAL PLANS. RIGHT-OF-WAY LIMITS SHALL BE FIELD VERIFIED BY CONTRACTOR AS NECESSARY.

35. ALL WORK SHALL BE PERFORMED IN ACCORDANCE WITH THE ORDERS OF CONDITIONS ISSUES BY THE LOCAL CONSERVATION COMMISION HAVING JURISDICTION OVER THE WORK AREA.

90% SUBMITTAL
NOT FOR CONSTRUCTION

ISSUE	DATE	DESCRIPTION	BY	CHKD.	APP.

MASSACHUSETTS BAY TRANSPORTATION AUTHORITY

FITCHBURG COMMUTER RAIL LINE
IMPROVEMENT PROJECT
CONTRACT NO. G67PS01

GENERAL NOTES – TRACK

HNTB
300 APOLLO DRIVE
CHELMSFORD, MA 01824
(978) 905-4000

PROJECT MANAGER Date

MASSACHUSETTS BAY TRANSPORTATION AUTHORITY

APPROVED BY:

PROJECT MANAGER Date

		DES. BY	DR. BY	CHK. BY
HORIZ:	AS SHOWN	DJK	DJK	ECD
VERT:	AS SHOWN			
DATE:	9/8/11			

PLAN NO. 167986

SHEET G-5

ISSUE

PLOT DATE: 06-SEP-2011
FILE NAME: \\exw00\pmwork\JOBS\43919 Fitchburg commuter rail\TECHPROD\Cadd\Track\Sheets\South Acton Contractor\GN-005P30.dgn
XREF FILES:

SURVEY CONTROL POINT LEGEND

- PK NAIL
- STK/NAIL
- REBAR
- DISC
- DH
- X-CUT
- RR SPIKE

WETLAND LEGEND

- WETLAND FLAG
- Edge of Wetland
- 100' Wetland Buffer Zone
- Top of Bank / Mean Annual High Water
- Inner Riparian Zone
- Outer Riparian Zone
- Vernal Pool Boundary
- 100' Vernal Pool Habitat
- MNHESP Rare Species Polygon

TRACK AND ROAD LEGEND

- PROPOSED TRACK
- SHIFTED TRACK
- REALIGNED TRACK
- FUTURE TRACK WORK
- UD – UNDER DRAIN
- DITCH
- EXISTING TRACK
- EXISTING RIGHT OF WAY
- STRAW BALE / SILT FENCE
- TEMPORARY EASEMENT
- PERMANENT EASEMENT
- REMOVE TRACK
- EXISTING ACCESS ROAD
- PROPOSED ACCESS ROAD

CROSS SECTIONS LEGEND

- FENCE
- TREE

90% SUBMITTAL
NOT FOR CONSTRUCTION

SURVEY LEGEND

- CB CATCH BASIN
- CBCI CATCH BASIN w/ CURB INLET
- DI DROP INLET
- MD MANHOLE DRAINAGE
- ME MANHOLE ELECTRIC
- MH? MANHOLE UNKNOWN
- MS MANHOLE SEWER
- MT MANHOLE TELEPHONE
- MC MANHOLE CABLE
- HH HANDHOLE
- MHD MASS HIGHWAY DEPT. HANDHOLE
- DPW DEPT. OF PUBLIC WORKS HANDHOLE
- GG GAS GATE
- WG WATER GATE
- G? GATE UNKNOWN
- LIGHT POLE
- UP UTILITY POLE
- UPL UTILITY POLE w/ LIGHT POLE
- SGN SIGN
- WETLAND FLAG
- HYDRANT
- FLAG POLE
- GUY WIRE
- GUY POLE
- SB STONE BOUND
- SBDH STONE BOUND w/ DRILL HOLE
- DH DRILL HOLE
- GM GAS METER
- MB MAILBOX
- TELEPHONE
- TRAFFIC SIGNAL
- FIRE ALARM
- WASTE BASKET
- 12" TREE (w/ DIA)
- OHW OVERHEAD WIRES
- UGASLN-E UNDERGROUND GAS LINE
- UWLN-E UNDERGROUND WATER LINE
- HCR HANDICAPPED RAMP
- CSW CONCRETE SIDEWALK
- BCSW BIT. CONC. SIDEWALK
- BCC BIT. CONC. CURB
- BCB BIT CONC. BERM
- SGE SLOPED GRANITE EDGING
- GC GRANITE CURB
- EOP EDGE OF PAVEMENT
- CS CROSSING SIGNAL
- CSG CROSSING SIGNAL w/ GATE
- CS-PG CROSSING SIGNAL w/ PED. GATE
- CG CROSSING GATE ONLY (NO SIGNAL)
- STK STAKE (PROPERTY LINE MARKER)
- BOL BOLLARD
- X-ING RAILROAD CROSSING SIGN
- CP CONCRETE PAD
- SCB SIGNAL CONTROL BOX
- ELB ELECTRIC BOX
- MP MILEPOST
- GUARD RAIL
- STONE WALL
- 112x12 SPOT GRADE (LOCATION OF ELEVATION)

ABBREVIATIONS

AHD	AHEAD
BP	BEAN POLE
BR	BRIDGE
BK	BACK
℄	CENTER LINE
CIP	CAST IRON PIPE
CLF	CHAIN LINK FENCE
CMP	CORRUGATED METAL PIPE
CULV.	CULVERT
DH	DRILL HOLE
DIA.	DIAMETER
DMH	DRAIN MANHOLE
EL	ELEVATION
ELEV	ELEVATION
ELT	END OF LONG TIMBER
EPLP	EXCRUSION PLUG LEAD PLUG
EQN	STATION EQUATION
EXIST	EXISTING
FT	FOOT
GGR	GAS GATE GROUND
HH	HAND HOLD
LH	LEFT HAND TURNOUT
MIN	MINIMUM
M-O-W	MAINTENANCE OF WAY
MP	MILE POST
MPH	MILES PER HOUR
NIC	NOT IN CONTRACT
NO.	NUMBER
O.H.	OVER HEAD BRIDGE
OTM	OTHER TRACK MATERIALS
PK/NL	PARKER-KALON COMPANY NAIL
PROP	PROPOSED
PVC	POLYVINYL CHLORIDE
R/W	RIGHT OF WAY
RH	RIGHT HAND TURNOUT
ROW	RIGHT OF WAY
RR SPK	RAILROAD SPIKE
RTE	ROUTE
SBC	STONE BOX CULVERT
SF	SQUARE FEET
SMH	SEWER MANHOLE
ST.	STREET
STA/STA.	STATION

ABBREVIATIONS CONTINUED

STK/NL	STAKE NAIL
T.C.	TRACK CENTER
T/R	TOP OF RAIL
TBR	TO BE REMOVED
TYP	TYPICAL
TRK	TRACK
WET	WETLAND

ISSUE	DATE	DESCRIPTION	BY	CHKD.	APP.

MASSACHUSETTS BAY TRANSPORTATION AUTHORITY
FITCHBURG COMMUTER RAIL LINE
IMPROVEMENT PROJECT
CONTRACT NO. G67PS01

ABBREVIATIONS AND LEGENDS – TRACK

HNTB
300 APOLLO DRIVE
CHELMSFORD, MA 01824
(978) 905-4000

PROJECT MANAGER Date

MASSACHUSETTS BAY TRANSPORTATION AUTHORITY
APPROVED BY:
PROJECT MANAGER Date

		DES. BY	DR. BY	CHK. BY
HORIZ:	AS SHOWN	SS	SS	ECD
VERT:	AS SHOWN			
DATE:	9/8/11			

PLAN NO. 167985
SHEET G-6
ISSUE

PLOT DATE: 06-SEP-2011
FILE NAME: \\exw00\pmwork\JOBS\43919 Fitchburg commuter rail\TECHPROD\Cadd\Track\Sheets\South Acton Contractor\GN-006P30.dgn
XREF FILES:

HORIZONTAL ALIGNMENT DEFINITIONS

A	DISTANCE BETWEEN CENTERS OF CIRCLE
CC	CENTER OF CIRCLE
CS	CURVE TO SPIRAL
Dc	DEGREE OF CURVE DEFINED BY THE CHORD DEFINITION
Ec	EXTERNAL DISTANCE FROM MIDPOINT OF CIRCULAR CURVE TO PIC
I	ANGLE OF INTERSECTION OF MAIN TANGENTS AT PI
Lc	LENGTH OF CIRCULAR CURVE BETWEEN SC AND CS
Ls	LENGTH OF SPIRAL FROM TS TO SC (OR CS TO ST)
L.T.	LONG TANGENT OF SPIRAL; DISTANCE FROM PIS TO TS (OR PIS TO ST)
o	OFFSET FROM PC (OR PT) TO MAIN TANGENT
PC	POINT OF CURVE; ON SPIRALED CURVES THIS POINT IS OFFSET A DISTANCE "o" FROM THE MAIN TANGENT
PCC	POINT OF COMPOUND CURVATURE
PI	POINT OF INTERSECTION OF MAIN TANGENTS
PIC	POINT OF INTERSECTION OF LINES TANGENT AT SC AND CS
PIS	POINT OF INTERSECTION OF MAIN TANGENT AND LINE TANGENT AT SC (OR CS)
PS	POINT OF SWITCH
PT	POINT OF TANGENCY; ON SPIRALED CURVES THIS POINT IS OFFSET A DISTANCE "o" FROM THE MAIN TANGENT
R	RADIUS OF CIRCULAR CURVE
SC	SPIRAL TO CURVE
ST	SPIRAL TO TANGENT
S.T.	SHORT TANGENT OF SPIRAL; DISTANCE FROM PIS TO CS (OR PIS TO SC)
Tc	DISTANCE FROM SC (OR CS) TO PIC IN SPIRALED CURVE, OR TANGENT FROM PC (OR PT) TO PI IN A SIMPLE CURVE
TS	TANGENT TO SPIRAL
Xo	DISTANCE ALONG MAIN TANGENT FROM TS (OR ST) TO PERPENDICULAR OFFSET OF PC
X	DISTANCE ALONG MAIN TANGENT FROM TS (OR ST) TO PERPENDICULAR OFFSET OF SC (OR CS)
Y	PERPENDICULAR OFFSET FROM MAIN TANGENT TO CS (OR SC)
△s	SPIRAL ANGLE; CENTRAL ANGLE OF SPIRAL
△c	ANGLE OF INTERSECTION OF TANGENTS OF CIRCULAR CURVE ONLY

MAIN TANGENTS – THOSE LINES TANGENT TO ALIGNMENT AT TS AND ST WHICH INTERSECT AT PI

SPEED/SUPERELEVATION DATA

V	DESIGN SPEED IN MPH
Ea	ACTUAL SUPERELEVATION
Ee	TOTAL SUPERELEVATION
Eu	UNBALANCED SUPERELEVATION

VERTICAL ALIGNMENT DEFINITIONS

G1	INCOMING GRADE
G2	OUTGOING GRADE
LVC	LENGTH OF VERTICAL CURVE IN 100 FOOT STATIONS
PVC	POINT OF VERTICAL CURVATURE
PVI	POINT OF INTERSECTION OF GRADES
PVT	POINT OF VERTICAL TANGENCY
r	PERCENT RATE OF CHANGE OF GRADE PER 100 FEET

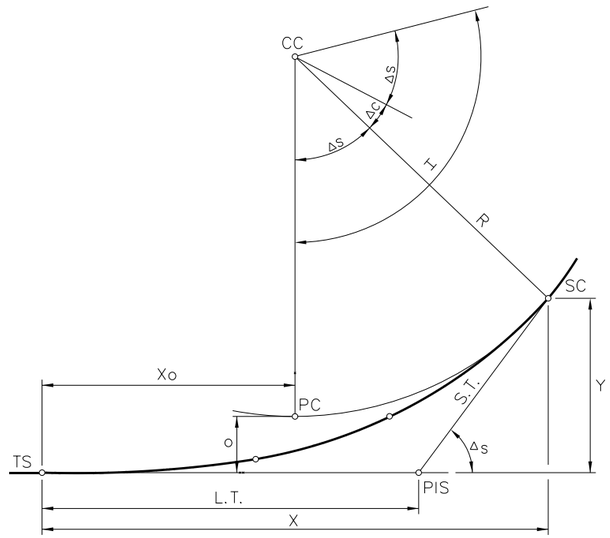

SPIRAL

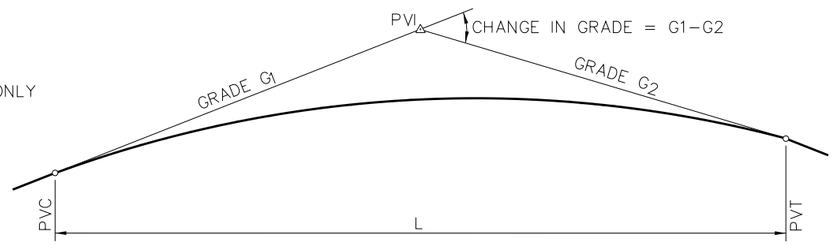

VERTICAL CURVE

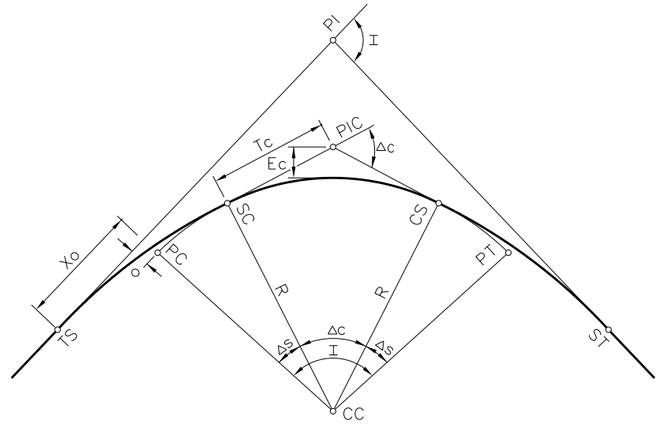

CIRCULAR CURVE WITH SPIRALS

COMPOUND SPIRAL

TURNOUT

90% SUBMITTAL
NOT FOR CONSTRUCTION

PLOT DATE: 06-SEP-2011
FILE NAME: \\lexw01\pmwork\JOBS\43919 Fitchburg commuter rail\TECHPROD\Cadd\Track\Sheets\South Acton Contractor\GN-007P30.dgn
XREF FILES:

MASSACHUSETTS BAY TRANSPORTATION AUTHORITY
FITCHBURG COMMUTER RAIL LINE IMPROVEMENT PROJECT
CONTRACT NO. G67PS01

CURVE DEFINITIONS AND GEOMETRY

ISSUE	DATE	DESCRIPTION	BY	CHKD.	APP.

HNTB
300 APOLLO DRIVE
CHELMSFORD, MA 01824
(978) 905-4000

PROJECT MANAGER Date

MASSACHUSETTS BAY TRANSPORTATION AUTHORITY
APPROVED BY:
PROJECT MANAGER Date

		DES. BY	DR. BY	CHK. BY
HORIZ:	AS SHOWN	KP	KP	ECD
VERT:	AS SHOWN			
DATE:	9/8/11			

PLAN NO. 168105
SHEET G-7
ISSUE

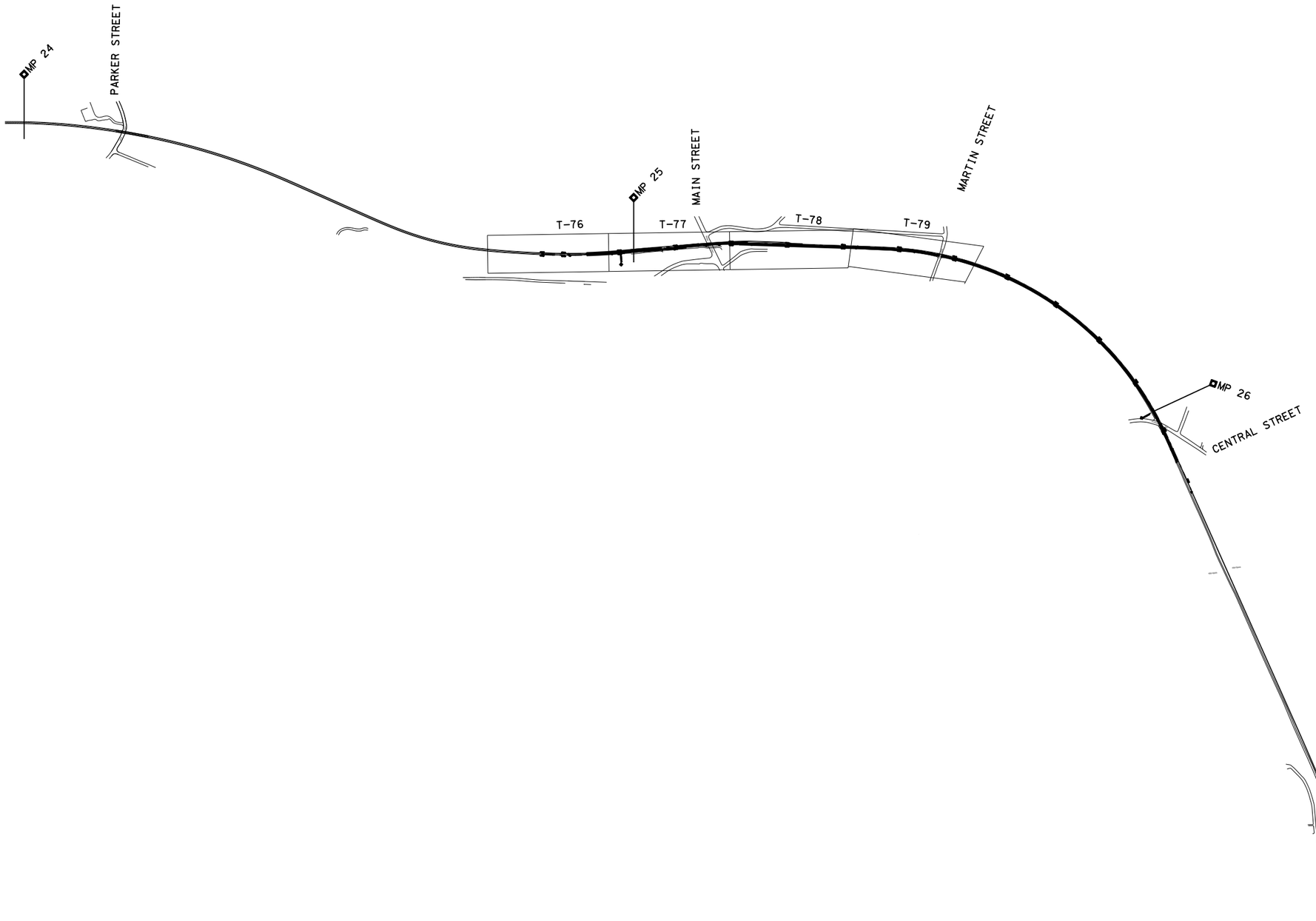

PLOT DATE: 06-SEP-2011
FILE NAME: \\exw00\prnwork\JOBS\43919 Fitchburg commuter rail\TECHPROD\Cadd\Track\Sheets\South Acton Contractor\TR-KP-003P60.dgn
XREF FILES:

90% SUBMITTAL
NOT FOR CONSTRUCTION

HORIZ. 500 0 500 1000
(SCALE IN FEET)

ISSUE	DATE	DESCRIPTION	BY	CHKD.	APP.

MASSACHUSETTS BAY TRANSPORTATION AUTHORITY

FITCHBURG COMMUTER RAIL LINE
IMPROVEMENT PROJECT
CONTRACT NO. G67PS01

KEY PLAN
MP 24 TO MP 27

HNTB
300 APOLLO DRIVE
CHELMSFORD, MA 01824
(978) 905-4000

PROJECT MANAGER Date

MASSACHUSETTS BAY TRANSPORTATION AUTHORITY
APPROVED BY:
PROJECT MANAGER Date

HORIZ: AS SHOWN	DES. BY	DR. BY	CHK. BY	PLAN NO. 167994	ISSUE
VERT: AS SHOWN	KP	KP	ECD		
DATE: 9/8/11				SHEET KP-3	

POINT	NORTHING	EASTING	ELEV	DESCRIPTION	FBK/PG
190	3021417.46	591828.82	378.95	PK-GPS	474/59
191	3021145.78	591986.18	377.75	STK/NL-GPS	474/59
~~505~~	~~3021770.25~~	~~652303.30~~	~~225.56~~	~~POLFROM1002-3006o~~	
1000	3014269.87	655520.68	243.97	PK-GPS	474/51
1001	3014493.99	655587.30	253.93	PK-GPS	474/51
1002	3021477.88	652564.14	226.84	REBAR	474/53
1003	3020713.21	653142.16	228.92	REBAR	474/53
1004	3020387.77	653300.14	228.23	REBAR	474/53
1005	3000604.37	662453.23	211.91	PK	474/45
1006	3001081.08	662142.47	211.14	PK	474/46
1007	3012277.74	656243.24	248.32	REBAR	474/49
1008	3011146.95	656765.09	249.43	REBAR	474/49
1009	3028382.54	644924.83	231.43	REBAR	474/63
1010	3028339.57	644562.18	232.65	PK	474/63
1011	3028268.02	645763.30	229.35	REBAR	474/62
1012	3028197.70	646002.31	229.57	RR SPK	474/61
~~1013~~	~~3028104.06~~	~~646285.40~~	~~228.97~~	~~REBAR~~	
1014	3027887.22	646578.77	227.55	REBAR	474/61
1015	3027660.60	646899.40	228.28	REBAR	474/61
1016	3028249.76	643744.59	234.10	REBAR	474/64
1017	3028189.69	643197.04	234.85	PK	474/64
1018	2972888.89	704563.61	188.49	REBAR	472/24
1019	2972355.81	704509.94	185.23	REBAR	472/10
1020	2957046.85	721454.10	88.79	X-CUT/HH	472/67
1021	2957021.66	721123.07	89.96	PK	472/68
1022	2956968.48	720789.51	92.30	PK	464/18
1023	2957081.79	720397.21	93.47	RR/SPK	464/18
1024	2957148.88	720077.24	94.86	PK	472/68
1025	2957215.31	719892.13	96.25	REBAR	472/68
1026	2957609.01	722469.23	78.14	REBAR	472/67
1027	2959760.31	717943.64	93.90	REBAR	463/22
1028	2960366.27	717678.89	93.36	REBAR	463/23
1029	2959971.91	717872.79	93.78	REBAR	463/22
1030	2959692.09	718012.29	93.96	REBAR	463/22
1031	2962759.37	730786.66	35.74	REBAR	472/61
1032	2962907.57	730933.32	38.35	PK	472/61
1033	2962217.56	729967.33	42.65	REBAR	472/62
1034	2962088.99	729647.99	40.76	REBAR	472/63
1035	2969516.22	745650.86	28.41	PK	472/58
1036	2969525.42	745228.97	31.26	STK/NL-GPS	472/58
1037	2969467.52	745687.16	26.56	REBAR	472/57
1038	2977783.00	702187.34	199.32	REBAR	474/5
1039	2978306.98	701896.40	195.97	REBAR	474/5

POINT	NORTHING	EASTING	ELEV	DESCRIPTION	FBK/PG
1040	2978686.69	701656.85	192.40	REBAR	474/5
1041	2979162.02	701425.62	189.94	REBAR	474/5
1042	2979605.75	701152.27	186.10	STK/NL	474/6
1043	2979930.03	701001.64	185.90	STK/NL	474/6
1044	2980651.97	700575.54	182.16	REBAR	474/7
1045	2980907.64	700480.97	181.46	STK/NL	474/7
1046	2981209.60	700269.29	180.00	REBAR	474/7
1047	3023395.69	607442.17	327.84	REBAR	465/30
1048	3023034.83	606301.61	333.07	STK/NL	465/31
1049	2961710.45	728376.51	43.73	REBAR	472/64
1050	2961519.46	727669.82	45.83	PK	472/64
1051	2961419.83	727113.98	46.74	PK	472/65
1052	2961338.12	726846.25	47.43	PK	472/65
1053	2961664.98	769948.63	9.86	RR SPK	465/53
1054	2961719.85	769667.95	9.54	RR SPK	465/54
1055	2961974.48	769082.40	8.98	PM ON RAIL POST	465/54
1056	2961957.73	768780.95	8.22	DH IN CONC. PAD	465/54
1057	2964876.24	735801.55	52.41	STK/NL	465/65
1058	2965009.93	736155.21	54.31	STK/NL	465/65
1059	2964108.65	733424.33	39.56	REBAR	465/72
1060	2963841.30	732673.92	38.61	STK/NL	465/72
1061	2963672.22	732154.50	39.54	REBAR	465/72
1062	2962156.11	716042.44	94.80	REBAR	466/35
1063	2992817.00	667436.22	204.18	PK	474/41
~~1064~~	~~2992641.71~~	~~667428.12~~	~~197.52~~	~~PK~~	
1065	2964841.88	713638.11	108.16	X-CUT ON ROCK OUTCROP	466/42
1066	2964206.71	714121.19	101.21	REBAR	466/42
1067	3023741.54	616522.72	280.48	REBAR	474/72
1068	3023885.85	617013.20	277.66	REBAR	474/72
1069	3023983.23	617374.42	276.04	REBAR	474/72
1070	3023925.98	617341.97	276.88	STK/NL	474/72
1071	3024001.44	611128.76	299.37	REBAR	474/71
1072	3028215.05	588102.01	381.62	REBAR	472/41
1073	3028837.50	587813.79	380.29	REBAR	472/42
1074	3029154.63	587628.02	377.90	REBAR	472/42
1075	3029465.33	587393.14	377.66	REBAR	472/43
1076	3029762.56	587113.18	375.64	STK/NL	472/43
1077	3028231.27	588147.75	381.48	STK/NL	472/41
1078	2969097.63	742767.52	47.30	STK/NL-GPS	472/59
1079	2969242.65	742924.99	47.15	STK/NL-GPS	472/59
1080	2965728.52	713121.59	108.78	STK/NL	469/09
1081	2968464.25	711308.01	132.31	STK/NL	472/74
1082	2968658.66	711078.28	134.79	STK/NL	472/74

90% SUBMITTAL
NOT FOR CONSTRUCTION

MASSACHUSETTS BAY TRANSPORTATION AUTHORITY
FITCHBURG COMMUTER RAIL LINE
IMPROVEMENT PROJECT
CONTRACT NO. G67PS01

SURVEY CONTROL POINTS
MASTER SHEET 2

ISSUE	DATE	DESCRIPTION	BY	CHKD.	APP.

HNTB
300 APOLLO DRIVE
CHELMSFORD, MA 01824
(978) 905-4000

PROJECT MANAGER Date

MASSACHUSETTS BAY TRANSPORTATION AUTHORITY
APPROVED BY:
PROJECT MANAGER Date

		DES. BY	DR. BY	CHK. BY	
HORIZ:	AS SHOWN				PLAN NO. 168004
VERT:	AS SHOWN	KP	KP	ECD	ISSUE
DATE:	9/8/11				SHEET SC-2

PLOT DATE: 06-SEP-2011
FILE NAME: \\texw00\pmwork\JOBS\43919 Fitchburg commuter rail\TECHPROD\Cadd\Track\Sheets\South Acton Contractor\Survey Control_Master2.dgn
XREF FILES:

POINT	NORTHING	EASTING	ELEV	DESCRIPTION	FBK/PG
1083	2969033.11	710405.59	137.69	STK/NL	472/73
1084	2968887.23	710685.44	135.27	PK	472/73
1085	2992622.40	669955.51	189.88	STK/NL	474/28
1086	2992880.00	667054.64	202.46	REBAR	469/33
1087	2991848.39	685679.89	116.66	PK	474/12
1088	2991698.94	685668.01	115.43	STK/NL	474/12
1089	2991719.24	685595.07	130.18	REBAR	474/12
1090	3023889.45	612219.45	291.79	REBAR	469/58
1091	3023922.70	612205.25	292.66	REBAR	469/58
~~1092~~	~~3023965.11~~	~~612172.52~~	~~270.02~~	~~REBAR~~	
1093	2967775.41	711839.36	124.43	STK/NL	472/73
1094	2969169.24	710000.58	139.85	STK/NL	472/73-472/74
1095	2971782.51	704583.85	182.04	REBAR	472/10
1096	2971429.04	704725.26	177.86	STK/NL	472/10
1097	2970649.50	705453.32	172.79	PK	472/11
1098	2970514.62	705857.26	165.52	REBAR	472/12
1099	2970352.26	706228.85	162.48	STK/NL	472/12
1100	3022373.93	604203.50	351.81	REBAR	472/22
1101	3022006.28	603520.65	357.12	REBAR	472/23
1102	2962011.63	768454.21	9.12	DH ON DMH	472/36
1103	2962104.68	768190.35	9.32	X-CUT ON SMH	472/36
1104	2962111.99	767828.09	10.24	DH ON DMH	472/36
1105	2962171.14	767469.57	12.67	REBAR	472/37
1106	2962277.62	767107.71	13.85	REBAR	472/37
1107	2962202.36	767522.19	13.97	PK	472/37
1108	2962140.52	768120.44	9.57	REBAR	472/36
2000	2993010.74	666432.51	205.01	STK/NL-GPS	474/28
2001	2992851.39	666366.14	205.64	PK-GPS	474/28
~~2002~~	~~2994719.02~~	~~664668.12~~	~~207.86~~	~~PK-GPS~~	
2003	2994795.04	664478.94	206.33	PK-GPS	474/43
2004	3000852.01	662293.86	212.39	STK/NL-GPS	474/43
2005	3001023.80	662363.19	209.96	PK-GPS	474/46
2006	2998153.87	663546.00	220.94	REBAR	474/44
2007	2997667.11	663588.04	217.07	REBAR	474/44
2008	2997165.82	663846.71	213.97	REBAR	474/44
2009	2996666.16	664011.53	210.56	REBAR	474/44
2010	2996162.71	664172.63	208.14	REBAR	474/44
2011	2995657.93	664333.28	207.23	REBAR	474/43
2012	2995179.89	664488.17	206.88	REBAR	474/43
2013	2994792.59	664567.64	206.43	REBAR-GPS	474/43
2014	2994461.93	664747.75	205.00	REBAR-GPS	474/30
2015	2994076.18	664978.18	203.73	REBAR	474/30
2016	2993731.93	665263.95	204.18	REBAR	474/30

POINT	NORTHING	EASTING	ELEV	DESCRIPTION	FBK/PG
2017	2993501.57	665520.11	204.79	REBAR	474/29
2018	2993338.47	665666.50	204.85	REBAR	474/29
2019	2993184.00	666008.31	204.70	REBAR	474/29
2020	2993082.48	666238.40	204.51	REBAR	474/29
2021	2992921.74	666792.44	203.62	REBAR-GPS	459A/03
2022	2992842.84	667239.55	204.81	PK	459A/03
2023	2992757.60	667640.67	201.72	REBAR	459A/03
2024	2992668.58	668254.99	199.85	PK	459A/02
2025	2992706.42	668679.02	198.13	DH ON IRON ROD ON GRAN. PC	459A/02
2026	2992643.76	669004.00	194.84	BP/TACK	459A/02
2027	2992683.41	669351.30	193.91	PK IN CONC. PAD	474/26
2028	2992650.75	669743.95	192.11	BP/TACK	459A/01
2029	2992597.89	670103.47	187.18	BP/TACK	459A/01
2030	2992518.53	670519.48	185.69	DH ON MP24.74	459A/01
2031	2992459.03	670762.13	183.07	DH ON LEDGE	459A/01
2032	2992345.64	671049.41	183.29	REBAR	474/27
2033	2992198.62	671336.26	182.04	REBAR	474/27
2034	2991963.51	671649.00	177.91	REBAR-GPS	474/27
2035	2991764.12	671993.89	172.63	REBAR-GPS	474/27
2036	3000095.75	662765.19	214.53	REBAR-GPS	474/45
2037	3000471.14	662539.17	212.75	REBAR-GPS	474/45
2038	3001701.05	661742.19	211.01	REBAR-GPS	474/25
2039	3002312.13	661348.07	212.31	REBAR-GPS	474/25
2040	3003910.51	660455.20	215.16	REBAR-GPS	474/47
2041	3004465.02	660219.29	215.30	REBAR-GPS	474/47
~~2042~~	~~3005681.15~~	~~659703.86~~	~~221.19~~	~~REBAR~~	
~~2043~~	~~3007521.33~~	~~658823.33~~	~~232.17~~	~~REBAR~~	
~~2044~~	~~3008040.08~~	~~658528.62~~	~~234.91~~	~~REBAR-GPS~~	
~~2045~~	~~3009429.67~~	~~657736.46~~	~~242.77~~	~~REBAR-GPS~~	
~~2046~~	~~3009974.22~~	~~657426.83~~	~~246.18~~	~~REBAR-GPS~~	
2047	3011587.39	656510.87	249.24	REBAR-GPS-HELD	474/49
2048	3011968.30	656353.53	248.59	REBAR-GPS	474/49
~~2049~~	~~3012773.99~~	~~656063.15~~	~~247.25~~	~~REBAR~~	
~~2050~~	~~3015426.08~~	~~655097.50~~	~~236.11~~	~~REBAR~~	
~~2051~~	~~3017039.83~~	~~654513.58~~	~~227.41~~	~~REBAR-GPS~~	
~~2052~~	~~3017545.49~~	~~654328.56~~	~~226.47~~	~~REBAR-GPS~~	
~~2053~~	~~3018349.04~~	~~654043.10~~	~~226.91~~	~~REBAR~~	
~~2054~~	~~3022403.40~~	~~651717.15~~	~~223.57~~	~~REBAR-GPS~~	
~~2055~~	~~3023001.10~~	~~651168.85~~	~~224.08~~	~~REBAR-GPS~~	
~~2056~~	~~3025743.19~~	~~648653.90~~	~~225.41~~	~~REBAR-GPS~~	
~~2057~~	~~3026693.53~~	~~647782.53~~	~~225.64~~	~~REBAR~~	
~~2058~~	~~3027932.22~~	~~646577.29~~	~~226.55~~	~~STK/NL~~	
~~2059~~	~~3028175.67~~	~~643078.65~~	~~234.04~~	~~STK/NL-GPS~~	

90% SUBMITTAL
NOT FOR CONSTRUCTION

MASSACHUSETTS BAY TRANSPORTATION AUTHORITY

FITCHBURG COMMUTER RAIL LINE
IMPROVEMENT PROJECT
CONTRACT NO. G67PS01

SURVEY CONTROL POINTS
MASTER SHEET 3

ISSUE	DATE	DESCRIPTION	BY	CHKD.	APP.

HNTB 300 APOLLO DRIVE CHELMSFORD, MA 01824 (978) 905-4000

PROJECT MANAGER Date

MASSACHUSETTS BAY TRANSPORTATION AUTHORITY

APPROVED BY:

PROJECT MANAGER Date

		DES. BY	DR. BY	CHK. BY		
HORIZ:	AS SHOWN	KP	KP	ECD	PLAN NO. 168005	ISSUE
VERT:	AS SHOWN					
DATE:	9/8/11				SHEET SC-3	

PLOT DATE: 06-SEP-2011
FILE NAME: \\lexw00\pmwork\JOBS\43919 Fitchburg commuter rail\TECHPROD\Cadd\Track\Sheets\South Acton Contractor\Survey Control_Master3.dgn
XREF FILES:

POINT	NORTHING	EASTING	ELEV	DESCRIPTION	FBK/PG
2153	2987292.52	696507.77	165.72	EPLP	474/9
2155	3032266.79	583964.77	372.64	STK/NL	472/45
2156	3032474.12	583658.32	372.81	REBAR	472/46
2157	3032735.28	583077.64	377.35	STK/NL	472/44
2158	3032812.78	582508.33	378.58	STK/NL	472/45
2159	3003489.56	660632.81	214.28	RR SPK	474/47
2160	3017231.49	599891.75	397.29	STK/NL	474/55
2161	2991863.10	692361.23	114.10	X-MARK	474/10
~~2162~~	~~2991863.09~~	~~692361.22~~	~~114.10~~	~~X-CUT~~	
~~2163~~	~~2991952.58~~	~~692260.02~~	~~124.57~~	~~PK~~	
~~2164~~	~~3001807.81~~	~~661666.05~~	~~211.31~~	~~STK/NL~~	
~~2165~~	~~3002913.94~~	~~660917.72~~	~~0.00~~	~~REBAR~~	
2166	2996073.47	664200.01	208.09	RR SPK	474/44
2167	2990799.09	681873.51	149.19	STK/NL	470/36
2168	2990840.63	681279.99	154.54	REBAR	470/36
2169	2990961.82	680477.59	160.58	PM IN VERT.RAIL	474/13
~~2170~~	~~3032503.51~~	~~583636.73~~	~~357.57~~	~~REBAR~~	
2171	3032400.26	583646.86	371.08	REBAR	472/47
2172	2991895.61	692190.74	134.99	STK/NL	474/10
~~2173~~	~~3032341.73~~	~~583537.03~~	~~360.83~~	~~REBAR~~	
~~2174~~	~~3032340.81~~	~~583539.56~~	~~360.89~~	~~REBAR~~	
2175	3032544.12	583530.15	373.58	REBAR	472/46
~~2176~~	~~2990817.46~~	~~682131.65~~	~~148.21~~	~~PK~~	
~~2177~~	~~3027712.40~~	~~636130.91~~	~~233.61~~	~~REBAR~~	
~~2178~~	~~3027901.86~~	~~635597.65~~	~~233.60~~	~~REBAR~~	
~~2179~~	~~3027752.81~~	~~636175.04~~	~~236.75~~	~~REBAR~~	
~~2180~~	~~3027902.05~~	~~635737.36~~	~~235.03~~	~~REBAR~~	
~~2181~~	~~3028260.80~~	~~634582.08~~	~~234.34~~	~~REBAR~~	
~~2182~~	~~3028459.60~~	~~634013.31~~	~~234.21~~	~~REBAR~~	
~~2183~~	~~3028639.34~~	~~633510.77~~	~~235.72~~	~~REBAR~~	
~~2184~~	~~3028780.93~~	~~632645.60~~	~~234.54~~	~~REBAR~~	
~~2185~~	~~3028267.80~~	~~635221.43~~	~~235.33~~	~~REBAR~~	
~~2186~~	~~2992767.84~~	~~668077.88~~	~~201.42~~	~~PK~~	
~~2187~~	~~2992922.28~~	~~668386.15~~	~~217.31~~	~~X-CUT~~	
~~2188~~	~~2992571.91~~	668218.44	~~206.37~~	~~REBAR~~	
~~2189~~	~~2993142.92~~	~~667815.11~~	~~207.03~~	~~PK~~	
3000	2961285.61	727403.96	42.51	X-CUT	459/11
3001	2961454.05	727390.58	46.09	PK-GPS	459/11
3002	2961651.76	727372.07	49.39	X-CUT	459/11
3003	2998557.81	663366.74	223.64	PK-GPS	459/16
3004	2998494.44	663539.21	224.64	PUNCH/GGR	459/16
3005	2998861.11	663313.19	223.69	PK-GPS	459/16
3006	3021132.93	652871.91	229.40	PK-GPS-HELD	459/18

POINT	NORTHING	EASTING	ELEV	DESCRIPTION	FBK/PG
3007	3021065.46	652746.73	231.18	PK-GPS	459/18
3008	3008674.75	658121.20	240.50	PK-GPS-HELD	459/19
3009	3008725.25	657996.25	246.30	PK-GPS	459/19
3010	3005009.43	659997.02	218.94	PK-GPS-HELD	459/20
3011	3004968.41	659928.72	217.10	PK-GPS	459/20
3012	3005334.12	659850.39	218.59	STK/NL-GPS	474/47
3013	3004606.01	660158.22	215.72	REBAR	474/47
3014	3014258.71	655512.32	244.06	PK-GPS	459/23
3015	2961610.26	727921.82	47.39	PK-GPS-HELD	459/26
3016	2961456.10	728089.34	46.46	PK	459/26
3017	3028397.41	645432.41	232.95	REBAR	459/41
3018	3028128.31	645500.36	228.78	PK	459/41
3019	3023477.18	614138.65	281.16	PK	459/42
3020	3023676.48	614296.11	285.91	PK	459/42
3021	2968267.40	711499.77	129.23	PK-GPS	459/52
3022	2968438.82	711552.28	122.13	PK	459/52
3023	2972740.47	704513.28	188.49	PK-GPS-HELD	459/53 *
3024	2972541.14	704563.97	186.57	REBAR-GPS	459/53 *
3026	2963332.12	764823.65	6.78	STK/NL-GPS	470/46
3027	2963695.74	764345.77	9.03	REBAR	470/46
3028	2963855.19	763885.47	8.08	REBAR-GPS	470/46
* MEASUREMENT NEEDED, ~~NO TIES NEEDED~~					

90% SUBMITTAL
NOT FOR CONSTRUCTION

MASSACHUSETTS BAY TRANSPORTATION AUTHORITY

FITCHBURG COMMUTER RAIL LINE
IMPROVEMENT PROJECT
CONTRACT NO. G67PS01

SURVEY CONTROL POINTS
MASTER SHEET 5

ISSUE	DATE	DESCRIPTION	BY	CHKD.	APP.

HNTB
300 APOLLO DRIVE
CHELMSFORD, MA 01824
(978) 905-4000

PROJECT MANAGER Date

MASSACHUSETTS BAY TRANSPORTATION AUTHORITY

APPROVED BY:

PROJECT MANAGER Date

HORIZ: AS SHOWN	DES. BY	DR. BY	CHK. BY	PLAN NO. 168007	ISSUE
VERT: AS SHOWN	KP	KP	ECD		
DATE: 9/8/11				SHEET SC-5	

PLOT DATE: 06-SEP-2011
FILE NAME: \\exw00\pmwork\JOBS\43919 Fitchburg commuter rail\TECHPROD\Cadd\Track\Sheets\South Acton Contractor\Survey Control_Master5.dgn
XREF FILES:

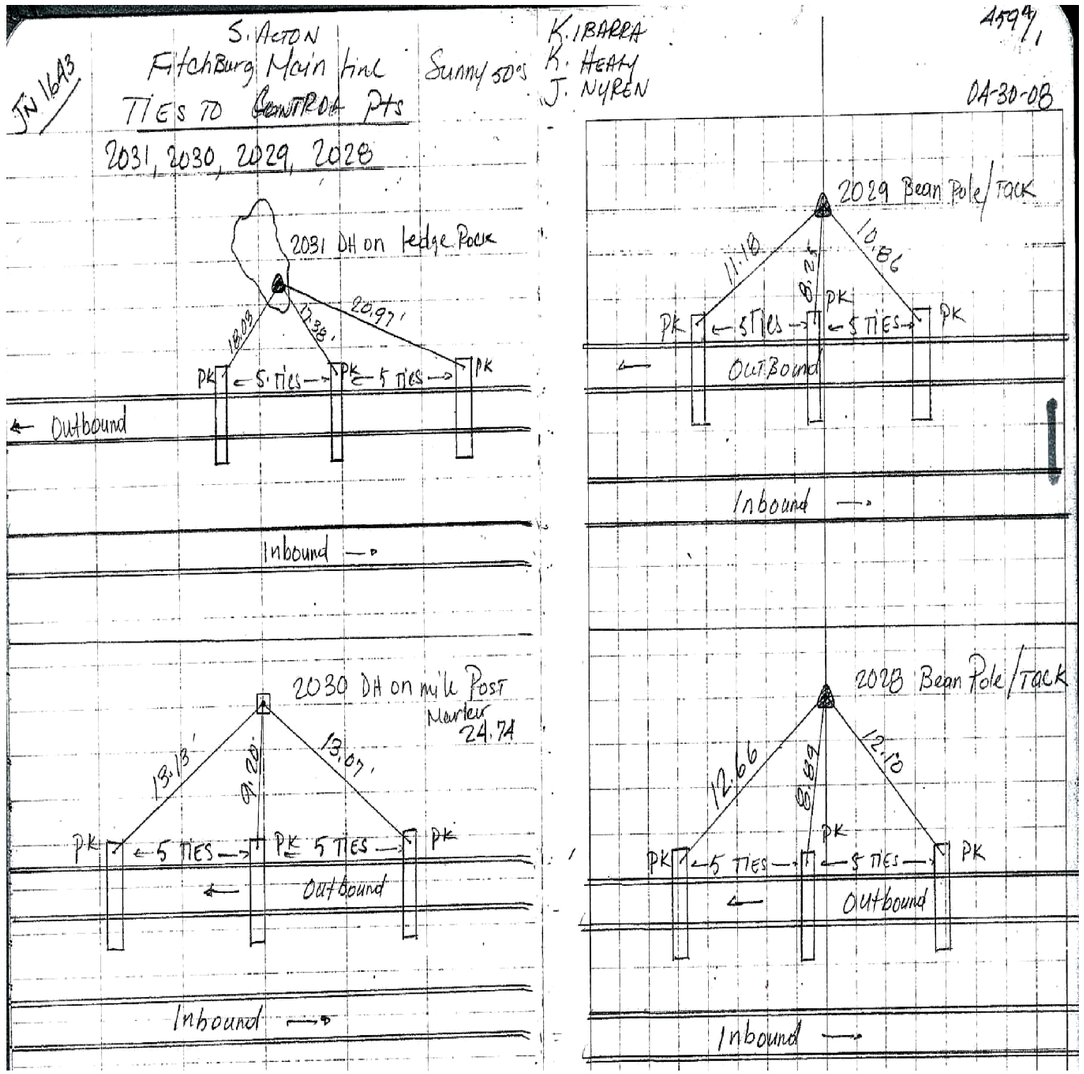

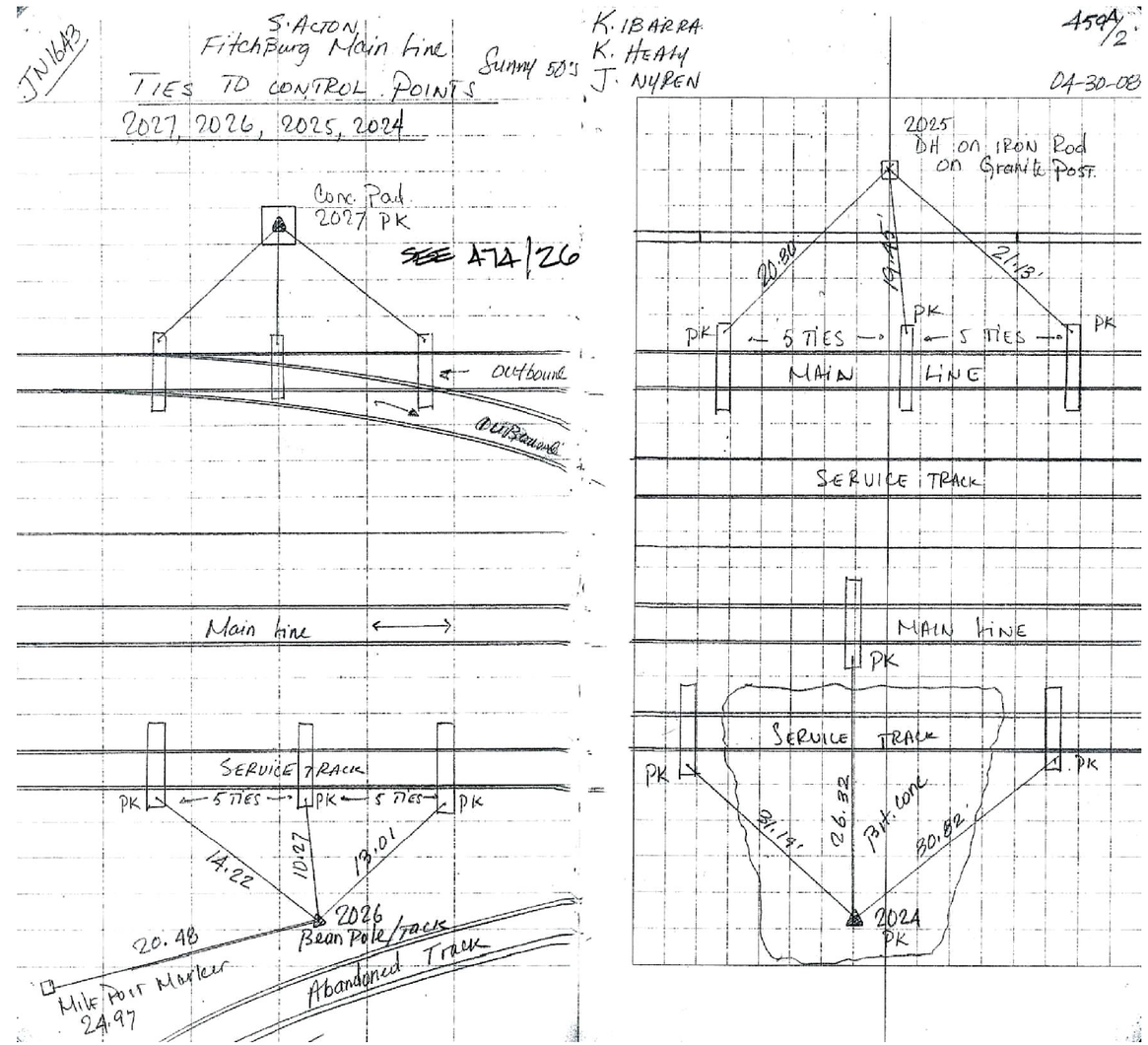

90% SUBMITTAL
NOT FOR CONSTRUCTION

MASSACHUSETTS BAY TRANSPORTATION AUTHORITY

FITCHBURG COMMUTER RAIL LINE
IMPROVEMENT PROJECT
CONTRACT NO. G67PS01

SURVEY CONTROL POINTS
AND TIE DOWN SKETCH
SHEET 1

HNTB
300 APOLLO DRIVE
CHELMSFORD, MA 01824
(978) 905-4000

MASSACHUSETTS BAY TRANSPORTATION AUTHORITY

APPROVED BY:

ISSUE	DATE	DESCRIPTION	BY	CHKD.	APP.

PROJECT MANAGER — Date

PROJECT MANAGER — Date

		DES. BY	DR. BY	CHK. BY
HORIZ:	AS SHOWN	KP	KP	ECD
VERT:	AS SHOWN			
DATE:	9/8/11			

PLAN NO. 168008

SHEET SC-101

ISSUE

PLOT DATE: 06-SEP-2011
FILE NAME: \\lexw00\pmwork\JOBS\43919 Fitchburg commuter rail\TECHPROD\Cadd\Track\Sheets\South Acton Contractor\TR-Survey Control_1.dgn
XREF FILES:

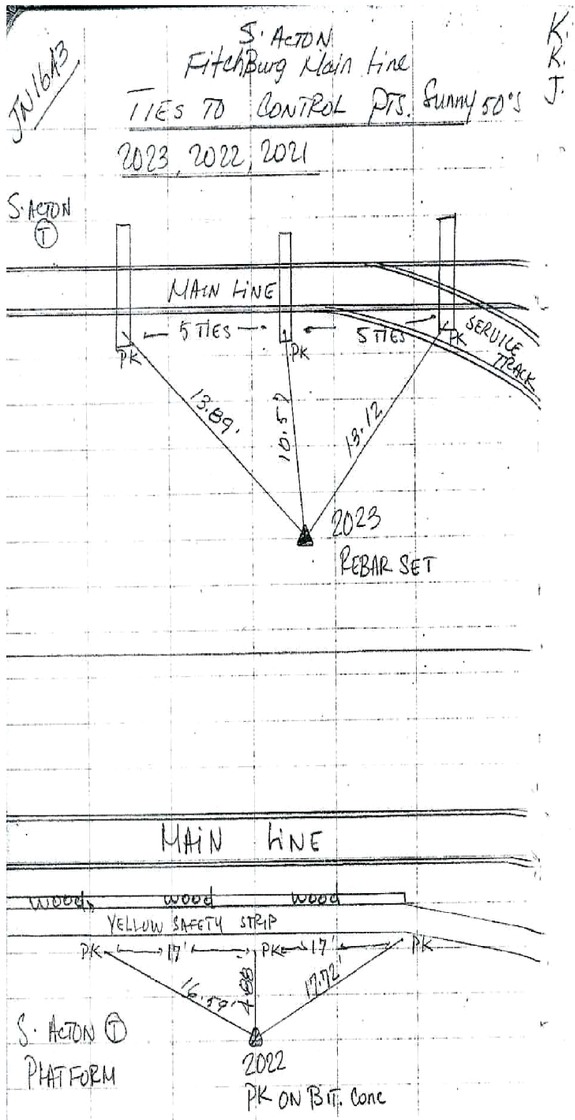

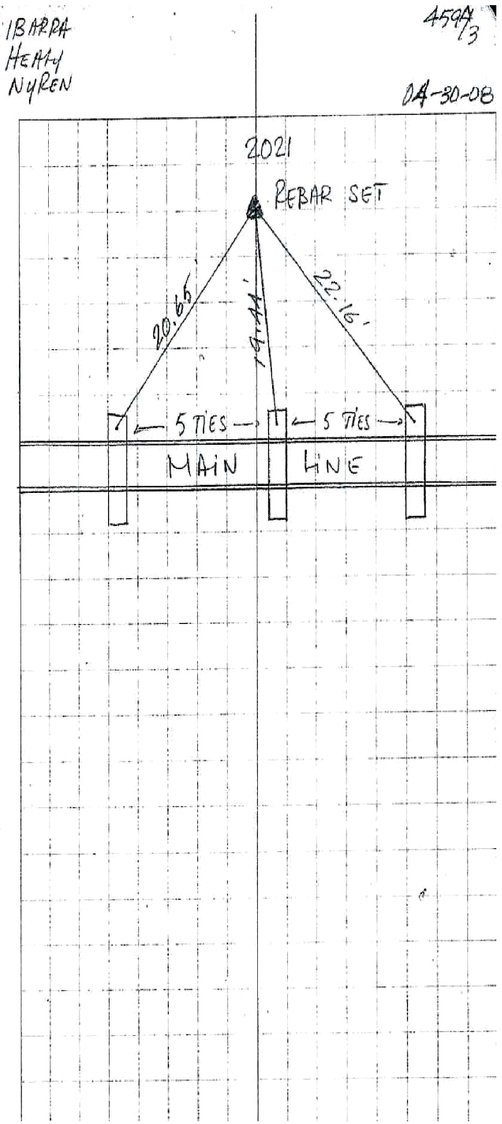

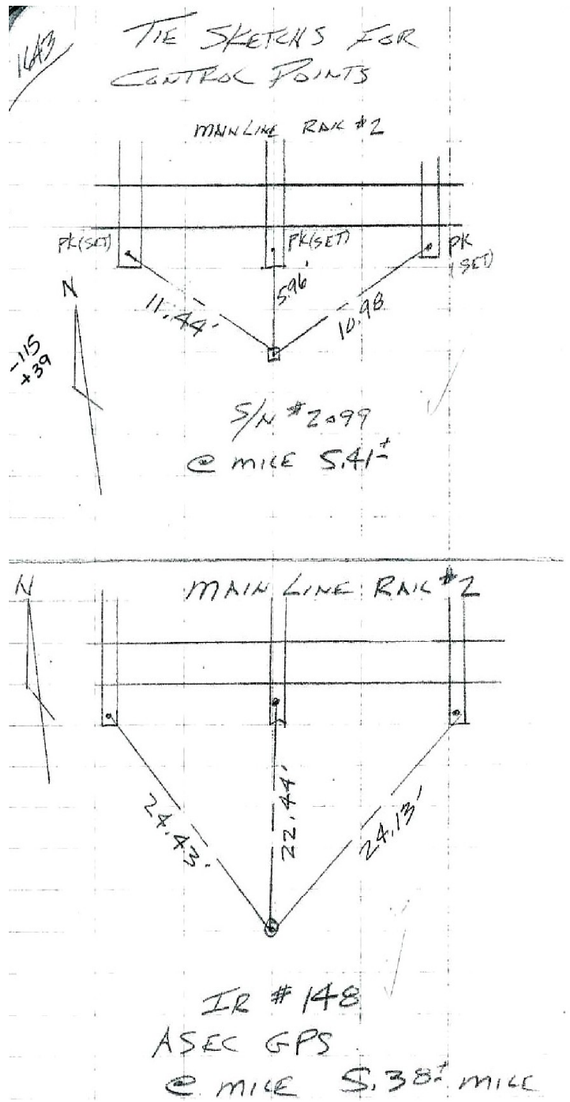

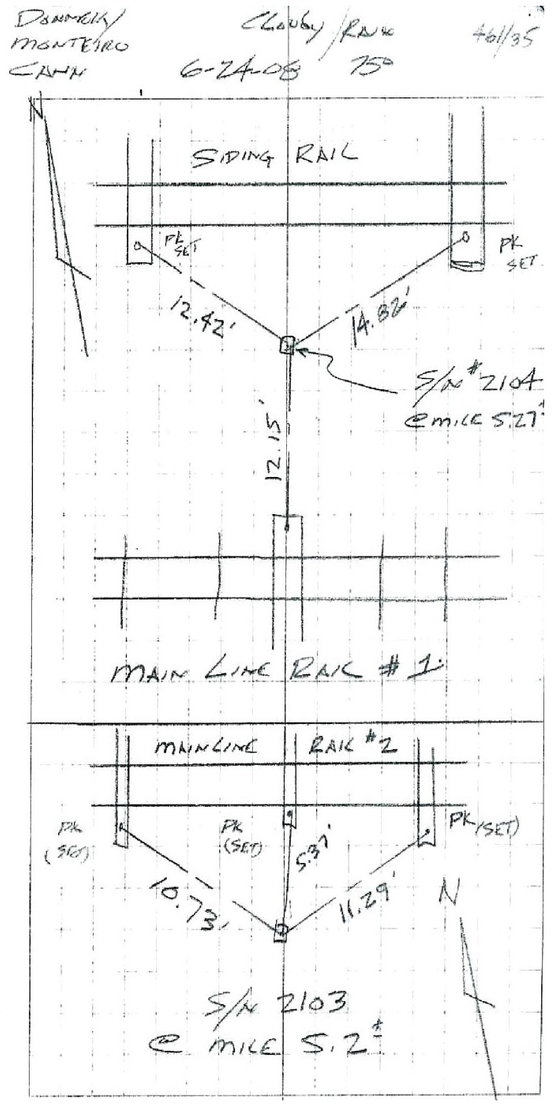

90% SUBMITTAL
NOT FOR CONSTRUCTION

ISSUE	DATE	DESCRIPTION	BY	CHKD.	APP.

MASSACHUSETTS BAY TRANSPORTATION AUTHORITY

FITCHBURG COMMUTER RAIL LINE
IMPROVEMENT PROJECT
CONTRACT NO. G67PS01

SURVEY CONTROL POINTS AND TIE DOWN SKETCH SHEET 2

HNTB
300 APOLLO DRIVE
CHELMSFORD, MA 01824
(978) 905-4000

PROJECT MANAGER Date

MASSACHUSETTS BAY TRANSPORTATION AUTHORITY
APPROVED BY:
PROJECT MANAGER Date

		DES. BY	DR. BY	CHK. BY
HORIZ:	AS SHOWN	KP	KP	ECD
VERT:	AS SHOWN			
DATE:	9/8/11			

PLAN NO. 168009
SHEET SC-102
ISSUE

PLOT DATE: 06-SEP-2011
FILE NAME: \\exw00\pmwork\JOBS\43919 Fitchburg commuter rail\TECHPROD\Cadd\Track\Sheets\South Acton Contractor\TR-Survey Control_2.dgn
XREF FILES:

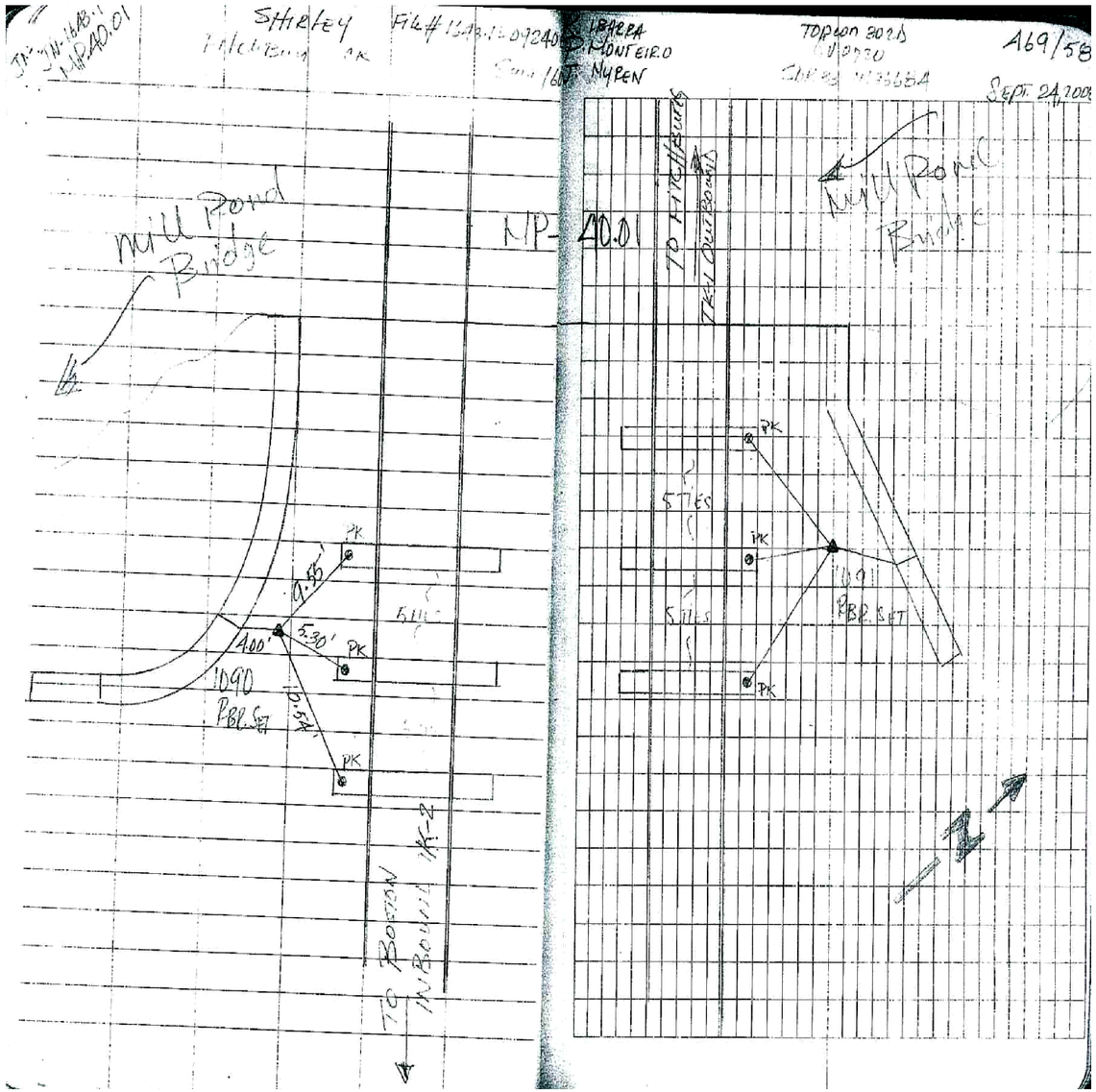

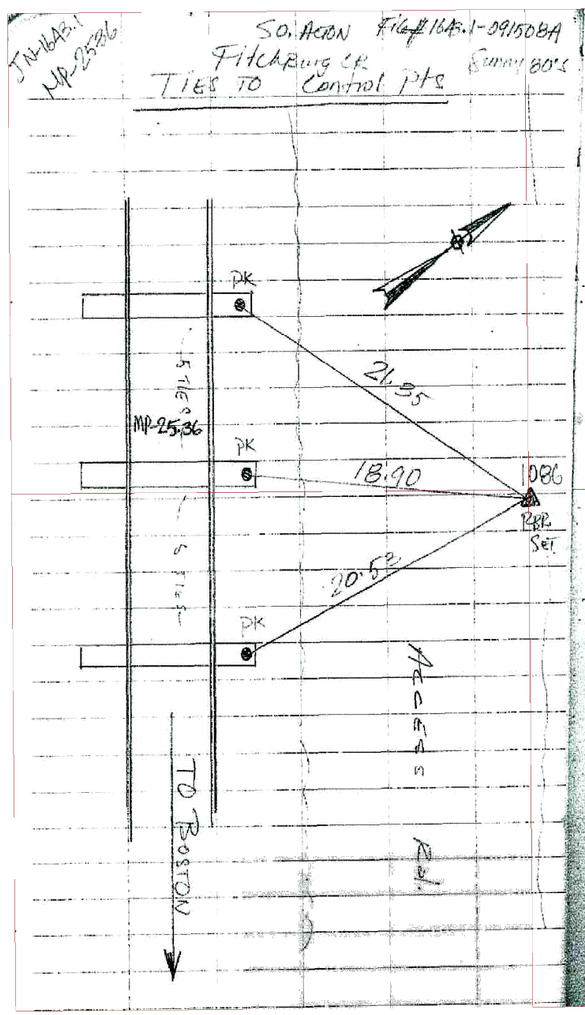

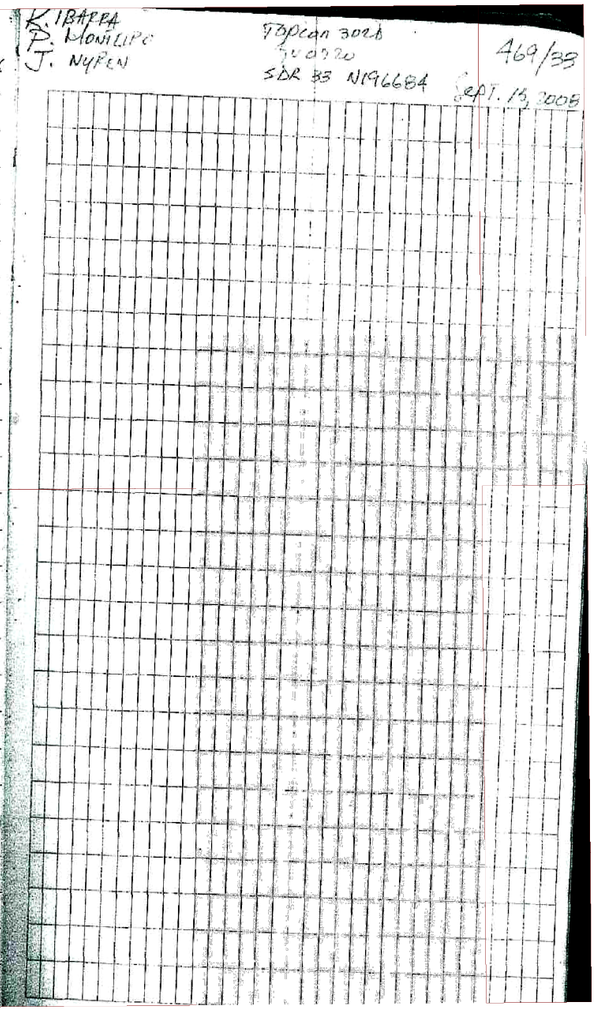

90% SUBMITTAL
NOT FOR CONSTRUCTION

MASSACHUSETTS BAY TRANSPORTATION AUTHORITY

FITCHBURG COMMUTER RAIL LINE
IMPROVEMENT PROJECT
CONTRACT NO. G67PS01

SURVEY CONTROL POINTS AND TIE DOWN SKETCH SHEET 11

HNTB
300 APOLLO DRIVE
CHELMSFORD, MA 01824
(978) 905-4000

MASSACHUSETTS BAY TRANSPORTATION AUTHORITY
APPROVED BY:

ISSUE	DATE	DESCRIPTION	BY	CHKD.	APP.

PROJECT MANAGER Date

PROJECT MANAGER Date

HORIZ: AS SHOWN	DES. BY	DR. BY	CHK. BY	PLAN NO. 168018	ISSUE
VERT: AS SHOWN	KP	KP	ECD		
DATE: 9/8/11				SHEET SC-111	

PLOT DATE: 06-SEP-2011
FILE NAME: \\texw00\pmwork\JOBS\43919 Fitchburg commuter rail\TECHPROD\Cadd\Track\Sheets\South Acton Contractor\TR-Survey Control_11.dgn
XREF FILES:

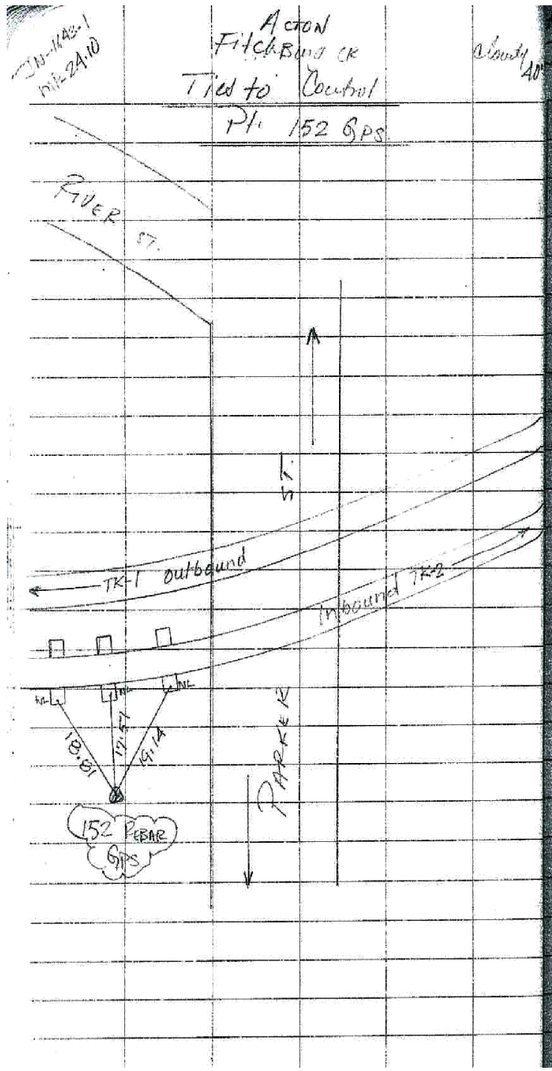

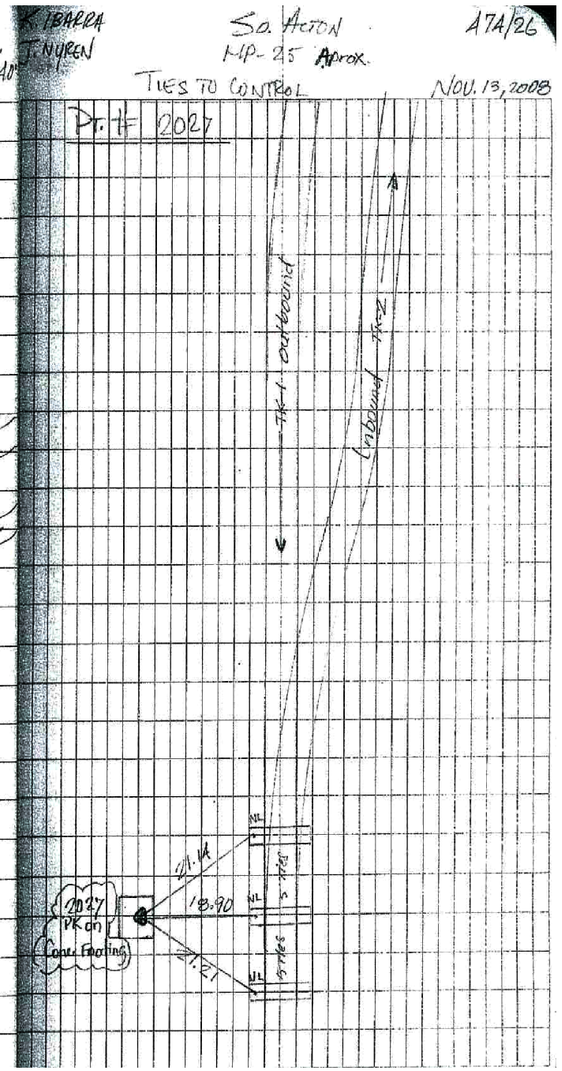

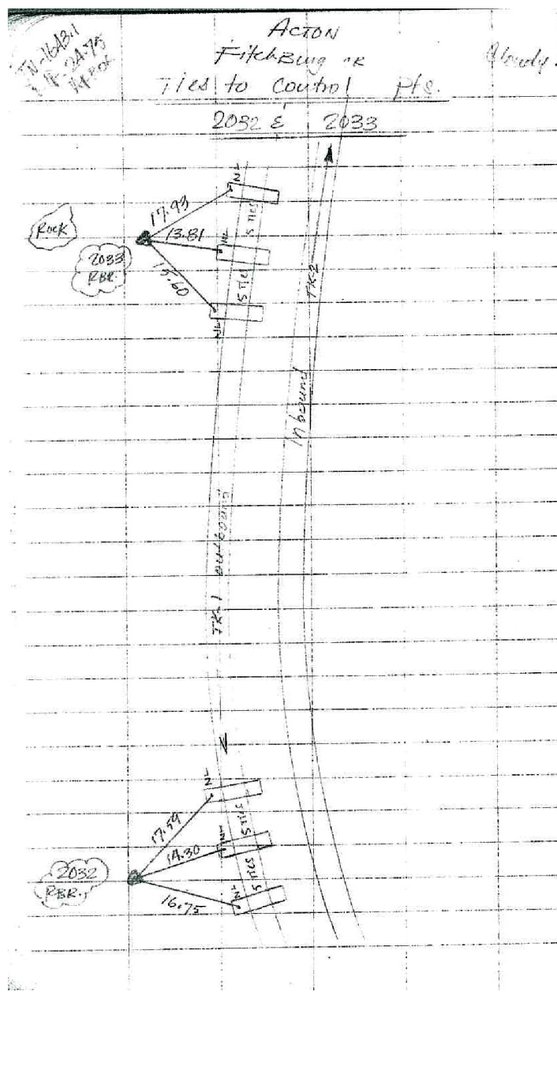

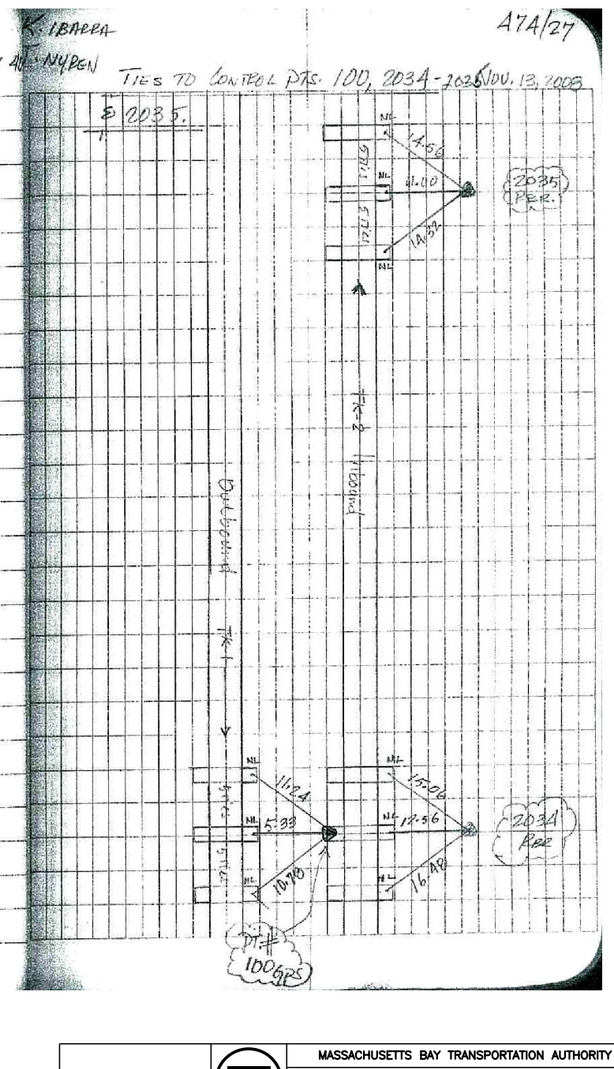

A7A/26

A7A/27

90% SUBMITTAL
NOT FOR CONSTRUCTION

MASSACHUSETTS BAY TRANSPORTATION AUTHORITY

FITCHBURG COMMUTER RAIL LINE
IMPROVEMENT PROJECT
CONTRACT NO. G67PS01

SURVEY CONTROL POINTS AND TIE DOWN SKETCH SHEET 36

ISSUE	DATE	DESCRIPTION	BY	CHKD.	APP.

HNTB
300 APOLLO DRIVE
CHELMSFORD, MA 01824
(978) 905-4000

PROJECT MANAGER Date

MASSACHUSETTS BAY TRANSPORTATION AUTHORITY

APPROVED BY:

PROJECT MANAGER Date

	DES. BY	DR. BY	CHK. BY
HORIZ: AS SHOWN	KP	KP	ECD
VERT: AS SHOWN			
DATE: 9/8/11			

PLAN NO. 168043

SHEET SC-136

ISSUE

PLOT DATE: 06-SEP-2011
FILE NAME: \\ewx00\prnwork\JOBS\43919 Fitchburg commuter rail\TECHPROD\Cadd\Track\Sheets\South Acton Contractor\TR-Survey Control_36.dgn
XREF FILES:

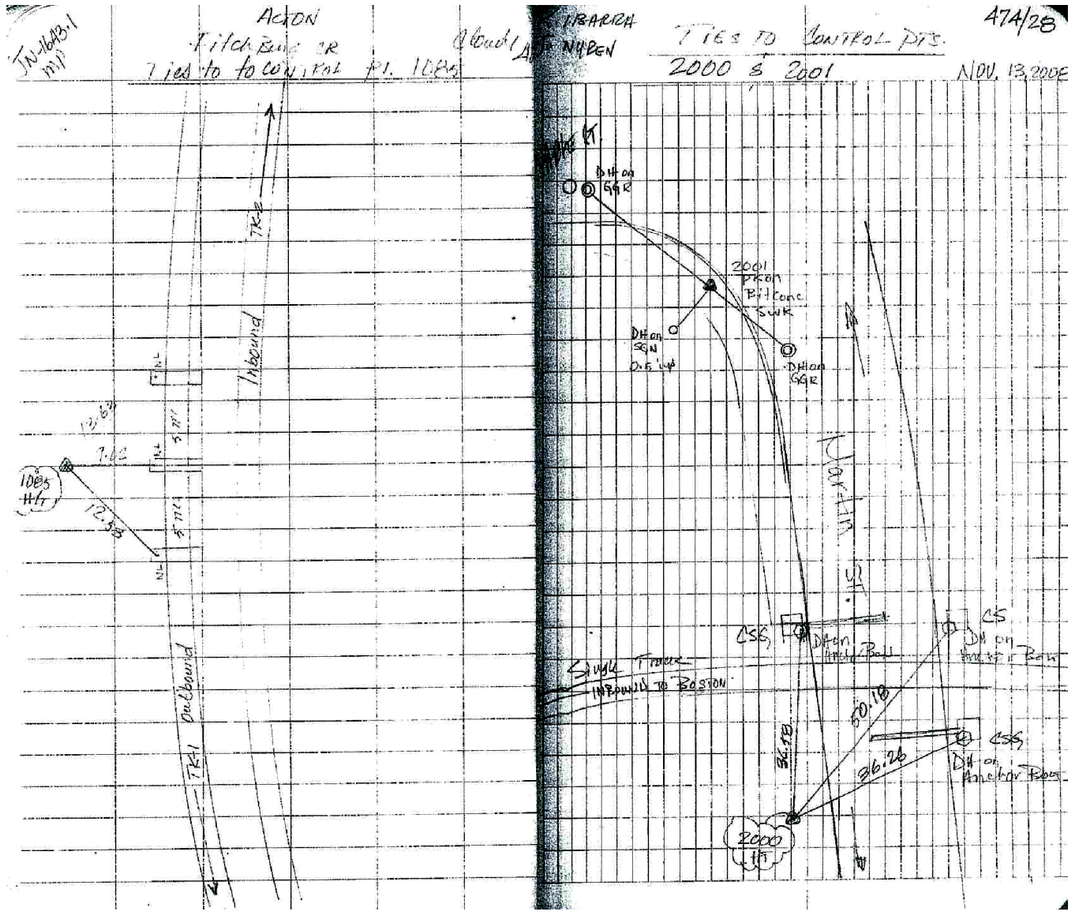

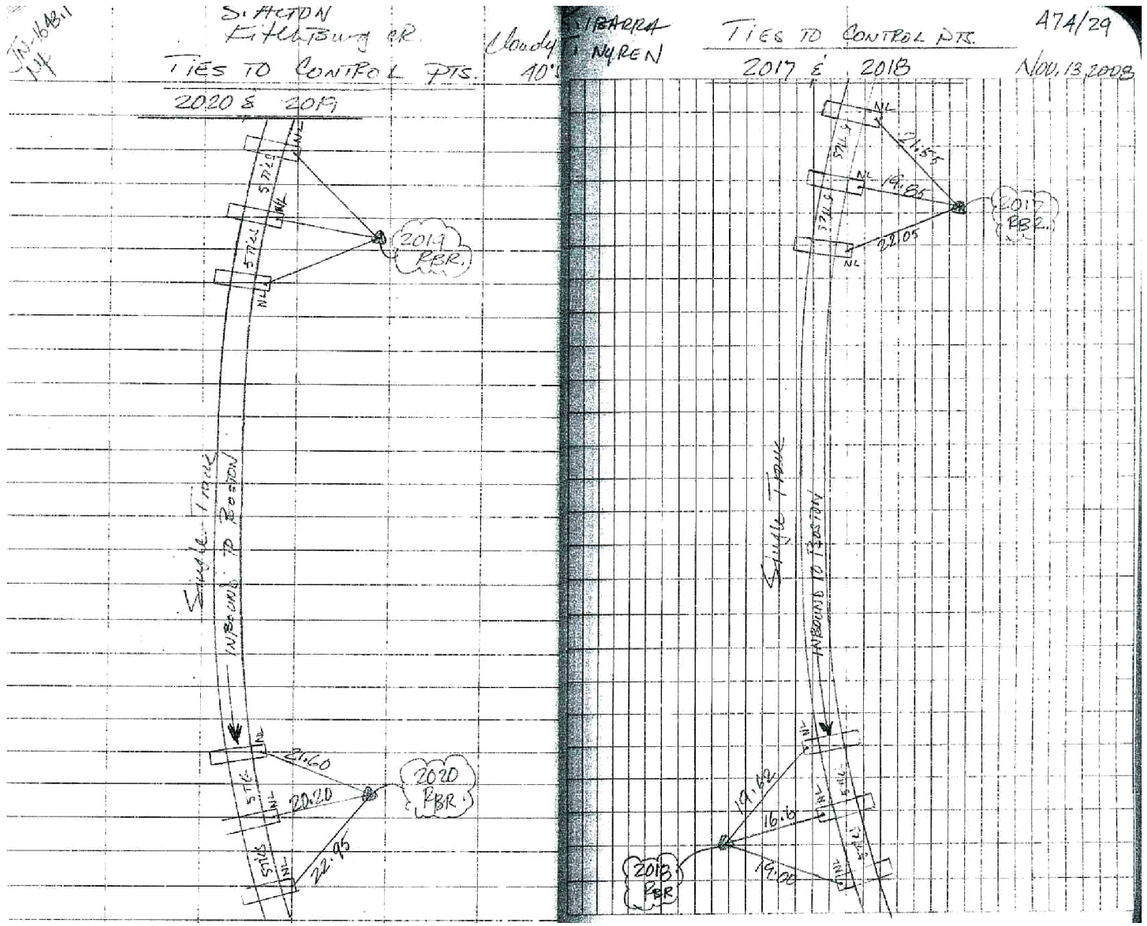

90% SUBMITTAL
NOT FOR CONSTRUCTION

MASSACHUSETTS BAY TRANSPORTATION AUTHORITY

FITCHBURG COMMUTER RAIL LINE
IMPROVEMENT PROJECT
CONTRACT NO. G67PS01

SURVEY CONTROL POINTS AND TIE DOWN SKETCH SHEET 37

ISSUE	DATE	DESCRIPTION	BY	CHKD.	APP.

HNTB
300 APOLLO DRIVE
CHELMSFORD, MA 01824
(978) 905-4000

PROJECT MANAGER Date

MASSACHUSETTS BAY TRANSPORTATION AUTHORITY

APPROVED BY:

PROJECT MANAGER Date

		DES. BY	DR. BY	CHK. BY		
HORIZ:	AS SHOWN	KP	KP	ECD	PLAN NO. 168044	ISSUE
VERT:	AS SHOWN					
DATE:	9/8/11				SHEET SC-137	

PLOT DATE: 06-SEP-2011
FILE NAME: \\exw00\pmwork\JOBS\43919 Fitchburg commuter rail\TECHPROD\Cadd\Track\Sheets\South Acton Contractor\TR-Survey Control_37.dgn
XREF FILES:

90% SUBMITTAL
NOT FOR CONSTRUCTION

PLOT DATE: 06-SEP-2011
FILE NAME: \\lexw00\pmwork\JOBS\43919 Fitchburg commuter rail\TECHPROD\Cadd\Track\Sheets\South Acton Contractor\TR-Survey Control_38.dgn
XREF FILES:

MASSACHUSETTS BAY TRANSPORTATION AUTHORITY

FITCHBURG COMMUTER RAIL LINE
IMPROVEMENT PROJECT
CONTRACT NO. G67PS01

SURVEY CONTROL POINTS AND TIE DOWN SKETCH SHEET 38

ISSUE	DATE	DESCRIPTION	BY	CHKD.	APP.

HNTB 300 APOLLO DRIVE CHELMSFORD, MA 01824 (978) 905-4000

MASSACHUSETTS BAY TRANSPORTATION AUTHORITY
APPROVED BY:

PROJECT MANAGER Date
PROJECT MANAGER Date

HORIZ: AS SHOWN	DES. BY	DR. BY	CHK. BY	PLAN NO. 168044	ISSUE
VERT: AS SHOWN	KP	KP	ECD		
DATE: 9/8/11				SHEET SC-138	

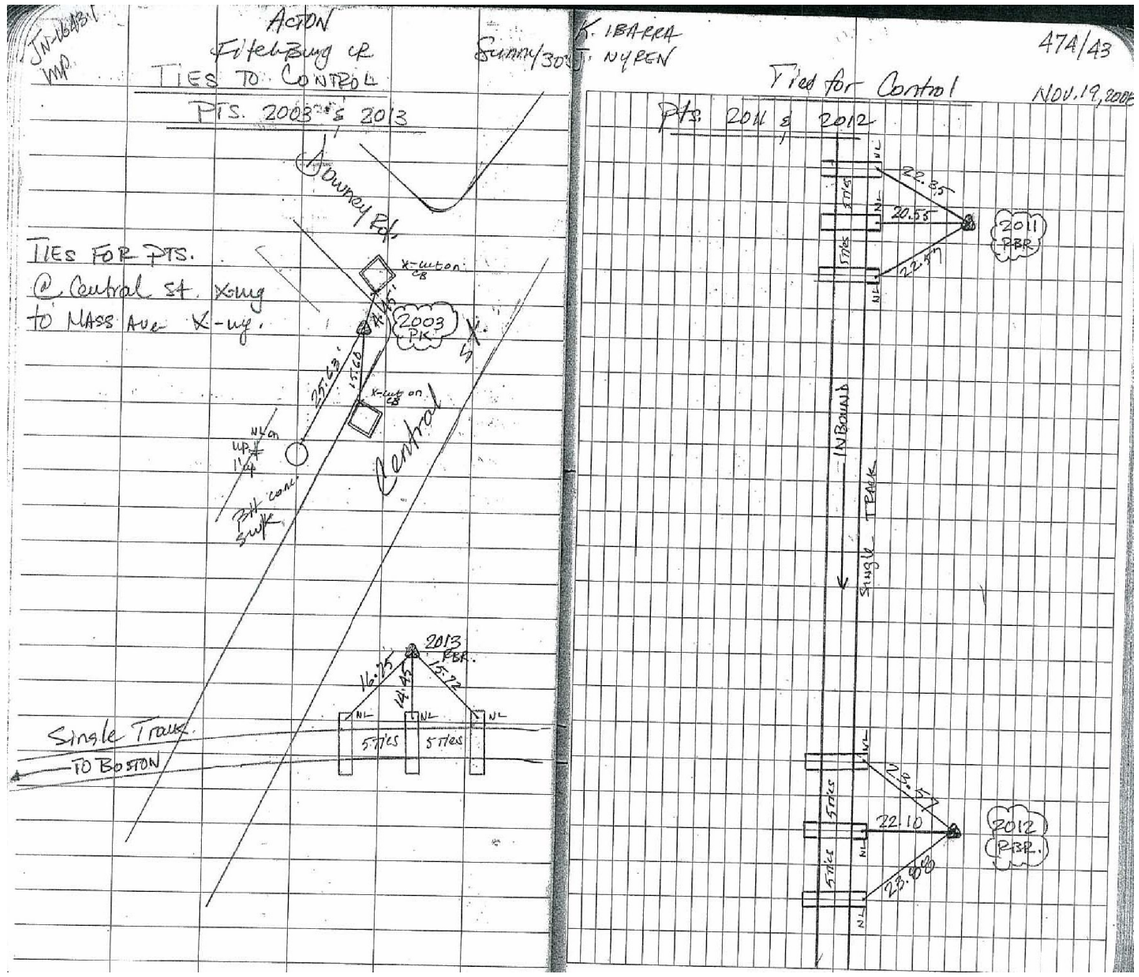

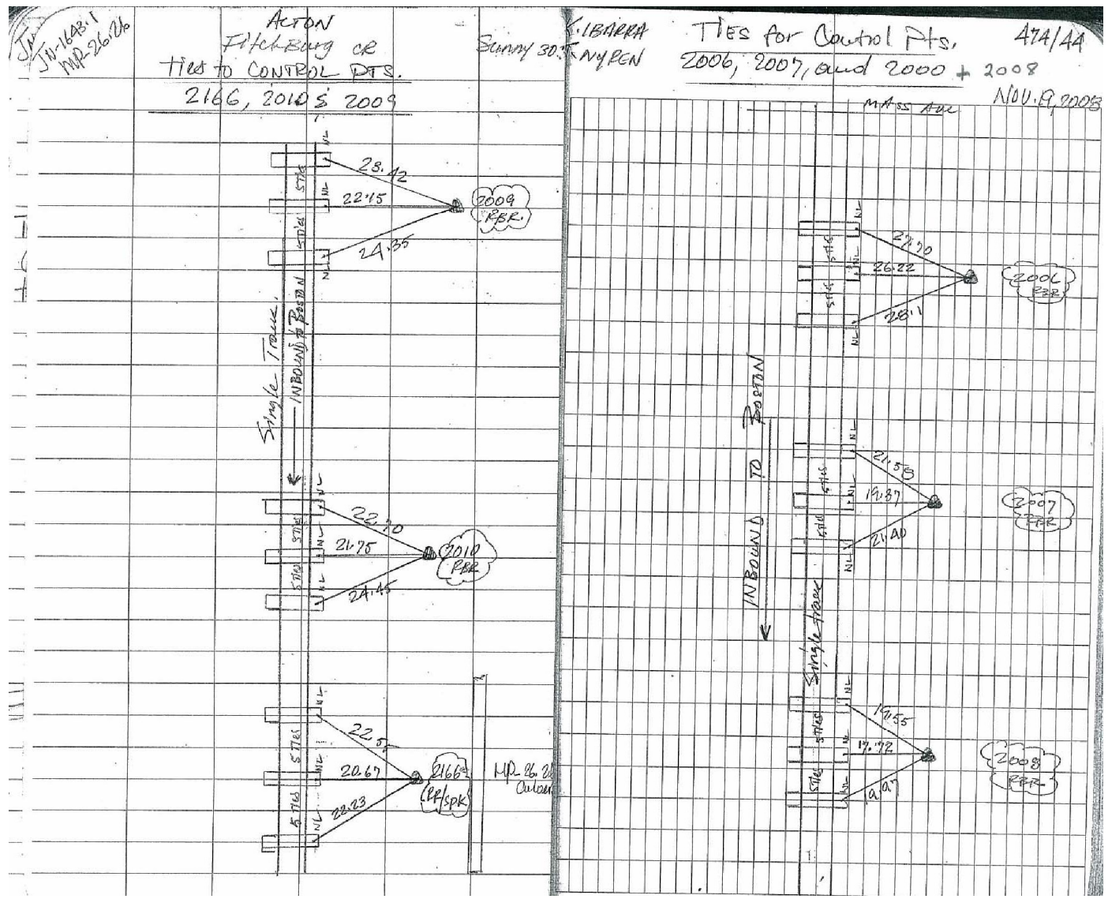

90% SUBMITTAL
NOT FOR CONSTRUCTION

ISSUE	DATE	DESCRIPTION	BY	CHKD.	APP.

MASSACHUSETTS BAY TRANSPORTATION AUTHORITY

FITCHBURG COMMUTER RAIL LINE
IMPROVEMENT PROJECT
CONTRACT NO. G67PS01

SURVEY CONTROL POINTS AND TIE DOWN SKETCH SHEET 39

HNTB
300 APOLLO DRIVE
CHELMSFORD, MA 01824
(978) 905-4000

PROJECT MANAGER Date

MASSACHUSETTS BAY TRANSPORTATION AUTHORITY
APPROVED BY:
PROJECT MANAGER Date

	DES. BY	DR. BY	CHK. BY
HORIZ: AS SHOWN	KP	KP	ECD
VERT: AS SHOWN			
DATE: 9/8/11			

PLAN NO. 168046
SHEET SC-139
ISSUE

PLOT DATE: 06-SEP-2011
FILE NAME: \\lexw00\pmwork\JOBS\43919 Fitchburg commuter rail\TECHPROD\Cadd\Track\Sheets\South Acton Contractor\TR-Survey Control_39.dgn
XREF FILES:

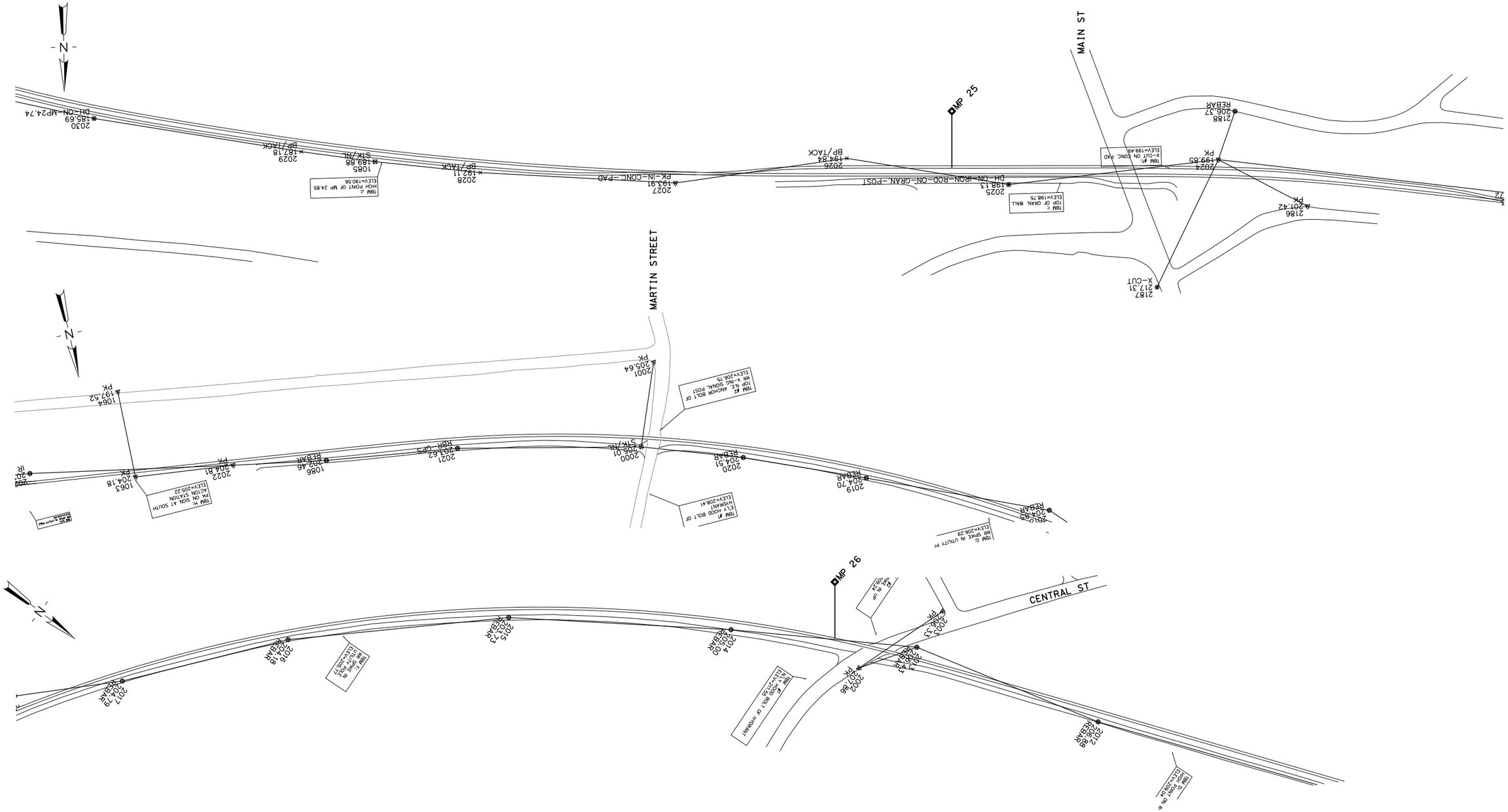

90% SUBMITTAL
NOT FOR CONSTRUCTION

HORIZ. 100 0 100 200
(SCALE IN FEET)

ISSUE	DATE	DESCRIPTION	BY	CHKD.	APP.

MASSACHUSETTS BAY TRANSPORTATION AUTHORITY
FITCHBURG COMMUTER RAIL LINE
IMPROVEMENT PROJECT
CONTRACT NO. G67PS01

SURVEY CONTROL POINTS AND BASELINE MP 25 TO MP 26

HNTB
300 APOLLO DRIVE
CHELMSFORD, MA 01824
(978) 905-4000

PROJECT MANAGER Date

MASSACHUSETTS BAY TRANSPORTATION AUTHORITY
APPROVED BY:
PROJECT MANAGER Date

HORIZ: AS SHOWN	DES. BY	DR. BY	CHK. BY	PLAN NO. 168084	ISSUE
VERT: AS SHOWN	KP	KP	ECD		
DATE: 9/8/11				SHEET SC-216	

PLOT DATE: 06-SEP-2011
FILE NAME: \\lexw00\pmwork\JOBS\43919 Fitchburg commuter rail\TECHPROD\Cadd\Track\Sheets\South Acton Contractor\TR-SurveyBaselineControl_16.dgn
XREF FILES:

TRACK GEOMETRY DATA - TRACK 1

ELEMENT	CURVE No.	POINT	STATION	BEARING	COORDINATES Northing	COORDINATES Easting	DATA			
CURVE	C 24-1/1	POC	1313+08.53		2992612.2985	669935.9251	△s = 2°21'34.48"	Dc= 0°58'28.83"	R= 5878.5222'	Lc= 242.0888'
		PI					V= 45MPH	Et= 1.38"	Ea= 1.50"	Eu= -0.12"
		PCC	1315+50.62		2992643.0775	669695.8151	Tc= 121.0630'	Ec= 1.2465'	CC:N 2986798.1125	E 669068.5931
CURVE	C 24-1/1	PCC	1315+50.62		2992643.0775	669695.8151	△c = 4°10'38.14"	Dc= 1°06'29.71"	R= 5170.0000'	Lc= 376.9230'
		PI					V= 45MPH	Et= 1.57"	Ea= 1.50"	Eu= 0.07"
		CS	1319+27.54		2992669.6033	669319.9044	Tc= 188.5480'	Ec= 3.4370'	CC:N 2987502.5901	E 669144.1905
SPIRAL		CS	1319+27.54		2992669.6033	669319.9044	△s = 0°35'09.82"	Ls= 105.7646'	LT= 70.5101'	ST= 35.2552'
							X= 105.7635'	Y= 0.3606'	P= 0.0902'	Xo= 52.8821'
		ST	1320+33.31		2992672.4770	669214.1793				
EQN BK STA 1320+33.31 EQN AHD STA 1320+33.29										
TANGENT				N 88°38'18.10" W						
		ST	1320+33.31		2992672.4770	669214.1793				
				N 88°38'18.10" W						
TANGENT				N 88°38'18.10" W						
		PI	1323+35.35		2992679.6549	668912.2017				
	2			N 88°38'18.10" W			NO. 15 RH CROSSOVER			
TANGENT				N 88°38'18.10" W						
		PS	1323+75.33		2992680.6049	668872.2339				
				N 88°38'18.10" W						
TANGENT				N 88°38'18.10" W						
		PS	1324+25.33		2992681.7930	668822.2480				
	3			N 88°38'18.10" W			NO. 15 LH CROSSOVER			
TANGENT				N 88°38'18.10" W						
		PI	1324+65.31		2992682.7431	668782.2803				
				N 88°38'18.10" W						
SPIRAL		TS	1327+71.38		2992690.0163	668476.2911	△s = 1°33'26.62"	Ls= 117.2637'	LT= 78.1788'	ST= 39.0907'
							X= 117.2551'	Y= 1.0624'	P= 0.2656'	Xo= 58.6304'
		SC	1328+88.65		2992693.8647	668359.0944				
CURVE	C 25-1/1	SC	1328+88.65		2992693.8647	668359.0944	△c = 2°40'41.70"	Dc= 2°39'23.27"	R= 2157.0367'	Lc= 100.8201'
		PI			2992694.5090	668287.2813	V= 45MPH	Et= 3.77"	Ea= 1.75"	Eu= 2.02"
		CS	1329+89.47		2992701.3507	668258.5527	Tc= 50.4238'	Ec= 0.5893'	CC:N 2994848.1026	E 668468.9409
SPIRAL		CS	1329+89.47		2992701.3507	668258.5527	△s = 2°29'46.02"	Ls= 187.9446'	LT= 125.3089'	ST= 62.6595'
							X= 187.9089'	Y= 2.7289'	P= 0.6823'	Xo= 93.9664'
		ST	1331+78.98		2992725.1041	668072.1312				
EQN BK STA 1331+77.41 EQN AHD STA 1331+78.98										
TANGENT				N 81°54'23.75" W						
		ST	1331+78.98		2992725.1041	668072.1312				
				N 81°54'23.75" W						

TRACK GEOMETRY DATA - TRACK 1 CONTINUED

ELEMENT	CURVE No.	POINT	STATION	BEARING	COORDINATES Northing	COORDINATES Easting	DATA			
SPIRAL		TS	1341+08.21		2992855.9280	667152.1547	△ s = 5°16'00.09"	Ls= 523.5257'	LT= 349.1717'	ST= 174.6491'
							X= 523.0835'	Y= 16.0313'	P= 4.0090'	Xo= 261.6891'
		SC	1346+31.74		2992945.4432	666636.5382				
CURVE	C 25-2/1	SC	1346+31.74		2992945.4432	666636.5382	△c = 56°39'25.93"	Dc= 2°00'43.23"	R= 2847.6904'	Lc= 2815.9521'
		PI			2993143.7268	665128.3044	V= 60MPH	Et= 5.07"	Ea= 2.50"	Eu= 2.57"
		CS	1374+47.69		2994742.9070	664618.3074	Tc= 1535.1574'	Ec= 387.4369'	CC:N 2995716.0667	E 667294.5549
SPIRAL		CS	1374+47.69		2994742.9070	664618.3074	△ s = 2°11'56.99"	Ls= 218.6037'	LT= 145.7471'	ST= 72.8781'
							X= 218.5715'	Y= 2.7966'	P= 0.6992'	Xo= 109.2965'
		ST	1376+66.29		2994950.1804	664548.8879				
EQN BK STA 1376+66.41 EQN AHD STA 1376+81.51										
TANGENT				N 17°47'00.75" W						
		ST	1376+66.29		2994950.1804	664548.8879				
				N 17°47'00.75" W						
TANGENT				N 17°47'00.75" W						
		PCL	1377+98.90		2995062.2093	664512.9549				
				N 17°47'00.75" W						

90% SUBMITTAL
NOT FOR CONSTRUCTION

ISSUE	DATE	DESCRIPTION	BY	CHKD.	APP.

MASSACHUSETTS BAY TRANSPORTATION AUTHORITY

FITCHBURG COMMUTER RAIL LINE
IMPROVEMENT PROJECT
CONTRACT NO. G67PS01

SOUTH ACTON STATION
TRACK 1
GEOMETRY DATA

HNTB
300 APOLLO DRIVE
CHELMSFORD, MA 01824
(978) 905-4000

MASSACHUSETTS BAY TRANSPORTATION AUTHORITY

APPROVED BY:

PROJECT MANAGER Date

PROJECT MANAGER Date

HORIZ: AS SHOWN	DES. BY	DR. BY	CHK. BY	PLAN NO. 168178	ISSUE
VERT: AS SHOWN	SS	SS	ECD		
DATE: 9/8/11				SHEET T-74	

PLOT DATE: 06-SEP-2011
FILE NAME: \\exw00\pmwork\JOBS\43919 Fitchburg commuter rail\TECHPROD\Cadd\Track\Sheets\South Acton Contractor\TR-SouthActon-Geo-001P30.dgn
XREF FILES:

TRACK GEOMETRY DATA - TRACK 2

ELEMENT	CURVE No.	POINT	STATION	BEARING	COORDINATES Northing	COORDINATES Easting	DATA			
CURVE	C 24-1/2	POC	1313+10.29		2992599.3862	669933.8652	△s = 1°51'31.16"	Dc= 0°48'23.53"	R= 7103.9931'	Lc= 230.4491'
		PI					V= 45MPH	Et= 1.14"	Ea= 1.50"	Eu= -0.36"
		PCC	1315+40.74		2992628.5820	669705.2812	Tc= 115.2356'	Ec= 0.9346'	CC:N 2985568.1642	E 668919.6492
CURVE	C 24-1/2	PCC	1315+40.74		2992628.5820	669705.2812	△c = 4°24'04.16"	Dc= 1°09'34.63"	R= 4941.0000'	Lc= 379.5348'
		PI					V= 45MPH	Et= 1.64"	Ea= 1.50"	Eu= 0.14"
		CS	1319+20.28		2992656.0337	669326.8276	Tc= 189.8640'	Ec= 3.6465'	CC:N 2987717.8897	E 669158.8550
SPIRAL		CS	1319+20.28		2992656.0337	669326.8276	△s = 0°35'11.56"	Ls= 101.1633'	LT= 67.4426'	ST= 33.7214'
							X= 101.1622'	Y= 0.3452'	P= 0.0863'	Xo= 50.5815'
		ST	1320+21.44		2992658.7827	669225.7021				
TANGENT				N 88°38'18.10" W						
		ST	1320+21.44		2992658.7827	669225.7021				
				N 88°38'18.10" W						
TANGENT				N 88°38'18.10" W						
		PS	1320+94.35		2992660.5151	669152.8187				
	1			N 88°38'18.10" W			NO. 15 RH CROSSOVER			
TANGENT				N 88°38'18.10" W						
		PI	1321+34.32		2992661.4651	669112.8510				
				N 88°38'18.10" W						
TANGENT				N 88°38'18.10" W						
		PI	1326+66.33		2992674.1071	668580.9934				
	4			N 88°38'18.10" W			NO. 15 LH CROSSOVER			
TANGENT				N 88°38'18.10" W						
		PS	1327+06.31		2992675.0571	668541.0256				
				N 88°38'18.10" W						
SPIRAL		TS	1327+75.01		2992676.6897	668472.3417	△s = 1°27'06.74"	Ls= 110.0000'	LT= 73.3358'	ST= 36.6689'
							X= 109.9929'	Y= 0.9291'	P= 0.2323'	Xo= 54.9988'
		SC	1328+85.01		2992680.2323	668362.4019				
CURVE	C 25-1/2	SC	1328+85.01		2992680.2323	668362.4019	△c = 3°49'40.87"	Dc= 2°38'24.00"	R= 2170.4867'	Lc= 145.0008'
		PI			2992681.0304	668289.7271	V= 45MPH	Et= 3.74"	Ea= 1.75"	Eu= 1.99"
		CS	1330+30.02		2992692.1817	668217.9086	Tc= 72.5338'	Ec= 1.2116'	CC:N 2994848.1026	E 668468.9409
SPIRAL		CS	1330+30.02		2992692.1817	668217.9086	△s = 1°27'06.74"	Ls= 110.0000'	LT= 73.3358'	ST= 36.6689'
							X= 109.9929'	Y= 0.9291'	P= 0.2323'	Xo= 54.9988'
		ST	1331+40.02		2992706.7474	668108.8804				
TANGENT				N 81°54'23.75" W						
		ST	1331+40.02		2992706.7474	668108.8804				
				N 81°54'23.75" W						

TRACK GEOMETRY DATA - TRACK 2 CONTINUED

ELEMENT	CURVE No.	POINT	STATION	BEARING	COORDINATES Northing	COORDINATES Easting	DATA			
SPIRAL		TS	1341+24.49		2992845.3493	667134.2085	△ s = 4°54'56.15"	Ls= 490.9424'	LT= 327.4212'	ST= 163.7623'
							X= 490.5811'	Y= 14.0325'	P= 3.5090'	Xo= 245.4110'
		SC	1346+15.44		2992928.3095	666650.4892				
CURVE	C 25-2/2	SC	1346+15.44		2992928.3095	666650.4892	△c = 57°00'48.56"	Dc= 2°00'09.42"	R= 2861.1904'	Lc= 2846.9487'
		PI			2993132.0809	665117.8624	V= 60MPH	Et= 5.04"	Ea= 2.50"	Eu= 2.54"
		CS	1374+62.38		2994738.5373	664605.5315	Tc= 1553.9357'	Ec= 394.7468'	CC:N 2995716.0667	E 667294.5549
SPIRAL		CS	1374+62.38		2994738.5373	664605.5315	△ s = 2°11'38.29"	Ls= 219.1212'	LT= 146.0921'	ST= 73.0506'
							X= 219.0891'	Y= 2.7966'	P= 0.6992'	Xo= 109.5553'
		ST	1376+81.51		2994946.3036	664535.9540				
TANGENT				N 17°47'00.75" W						
		ST	1376+81.51		2994946.3036	664535.9540				
				N 17°47'00.75" W						
TANGENT				N 17°47'00.75" W						
		PCL	1381+00.00		2995344.8016	664408.1365				
				N 17°47'00.75" W						

90% SUBMITTAL
NOT FOR CONSTRUCTION

ISSUE	DATE	DESCRIPTION	BY	CHKD.	APP.

MASSACHUSETTS BAY TRANSPORTATION AUTHORITY

FITCHBURG COMMUTER RAIL LINE
IMPROVEMENT PROJECT
CONTRACT NO. G67PS01

SOUTH ACTON STATION
TRACK 2
GEOMETRY DATA

HNTB
300 APOLLO DRIVE
CHELMSFORD, MA 01824
(978) 905-4000

MASSACHUSETTS BAY TRANSPORTATION AUTHORITY

APPROVED BY:

PROJECT MANAGER Date

PROJECT MANAGER Date

HORIZ: AS SHOWN	DES. BY	DR. BY	CHK. BY	PLAN NO. 168179	ISSUE
VERT: AS SHOWN	SS	SS	ECD		
DATE: 9/8/11				SHEET T-75	

PLOT DATE: 06-SEP-2011
FILE NAME: \\exw00\pmwork\JOBS\43919 Fitchburg commuter rail\TECHPROD\Cadd\Track\Sheets\South Acton Contractor\TR-SouthActon-Geo-001P30.dgn
XREF FILES:

EAST TO BOSTON

WEST TO FITCHBURG
TOWN OF ACTON

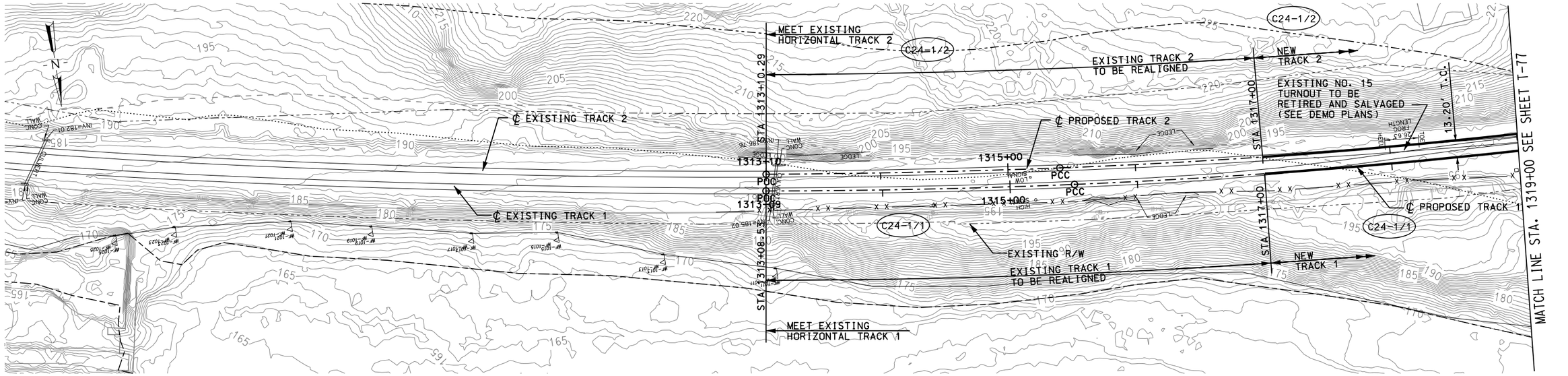

PLAN

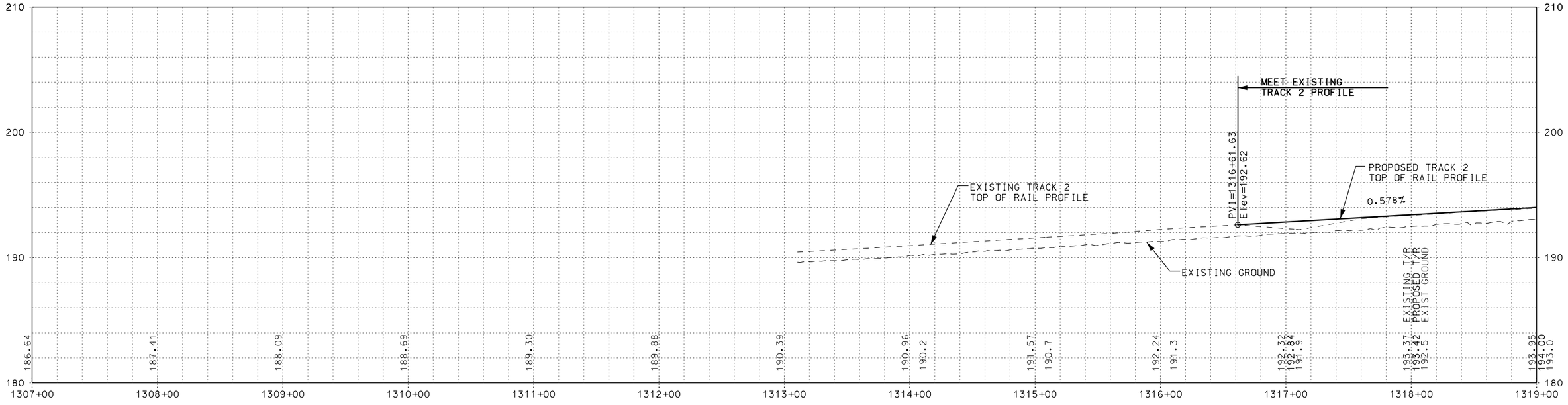

PROFILE

NOTES

1. FOR COORDINATE GEOMETRY, SEE SHEETS G-3 AND G-4.
2. TRACK TO BE CONSTRUCTED IN PHASES AS DEFINED ON PHASING PLANS.
3. FOR TRACK 1 PROFILE, SEE SHEET T-83.

90% SUBMITTAL
NOT FOR CONSTRUCTION

HORIZ. 40 0 40 80
VERT. 4 0 4 8
(SCALE IN FEET)

ISSUE	DATE	DESCRIPTION	BY	CHKD.	APP.

MASSACHUSETTS BAY TRANSPORTATION AUTHORITY

FITCHBURG COMMUTER RAIL LINE
IMPROVEMENT PROJECT
CONTRACT NO. G67PS01

SOUTH ACTON STATION
TRACK PLAN AND PROFILE
STA. 1307+00 TO STA. 1319+00

HNTB
300 APOLLO DRIVE
CHELMSFORD, MA 01824
(978) 905-4000

PROJECT MANAGER Date

MASSACHUSETTS BAY TRANSPORTATION AUTHORITY
APPROVED BY:
PROJECT MANAGER Date

		DES. BY	DR. BY	CHK. BY
HORIZ:	AS SHOWN	SS	SS	ECD
VERT:	AS SHOWN			
DATE:	9/8/11			

PLAN NO. 168180
SHEET T-76
ISSUE

PLOT DATE: 06-SEP-2011
FILE NAME: \\exw00\prnwork\JOBS\43919 Fitchburg commuter rail\TECHPROD\Cadd\Track\Sheets\South Acton Contractor\TR-South Acton Station-001P30.dgn
XREF FILES:

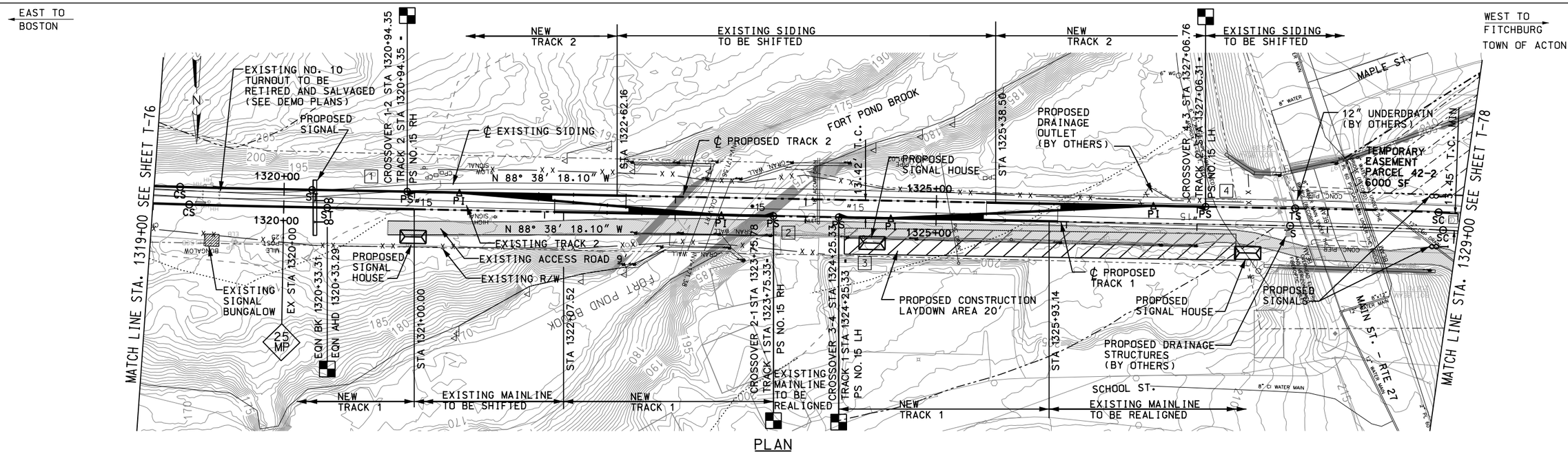

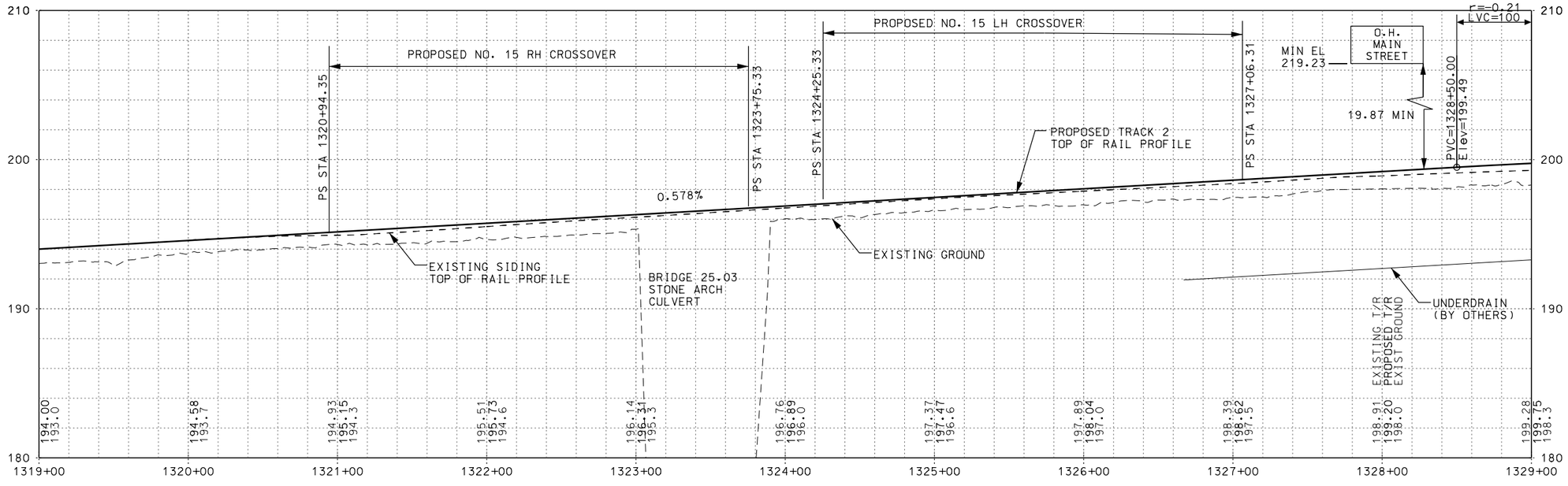

PROFILE

NOTES

1. FOR COORDINATE GEOMETRY, SEE SHEETS G-3 AND G-4.
2. TRACK TO BE CONSTRUCTED IN PHASES AS DEFINED ON PHASING PLANS.
3. FOR TRACK 1 PROFILE, SEE SHEET T-83.

90% SUBMITTAL
NOT FOR CONSTRUCTION

HORIZ. 40 0 40 80
VERT. 4 0 4 8
(SCALE IN FEET)

ISSUE	DATE	DESCRIPTION	BY	CHKD.	APP.

MASSACHUSETTS BAY TRANSPORTATION AUTHORITY

FITCHBURG COMMUTER RAIL LINE IMPROVEMENT PROJECT
CONTRACT NO. G67PS01

SOUTH ACTON STATION TRACK PLAN AND PROFILE STA. 1319+00 TO STA. 1329+00

HNTB 300 APOLLO DRIVE CHELMSFORD, MA 01824 (978) 905-4000

PROJECT MANAGER Date

MASSACHUSETTS BAY TRANSPORTATION AUTHORITY
APPROVED BY:
PROJECT MANAGER Date

		DES. BY	DR. BY	CHK. BY
HORIZ:	AS SHOWN			
VERT:	AS SHOWN	SS	SS	ECD
DATE:	9/8/11			

PLAN NO. 168181
SHEET T-77
ISSUE

PLOT DATE: 06-SEP-2011
FILE NAME: \\lexw00\pmwork\JOBS\43919 Fitchburg commuter rail\TECHPROD\Cadd\Track\Sheets\South Acton Contractor\TR-South Acton Station-002P30.dgn
XREF FILES:

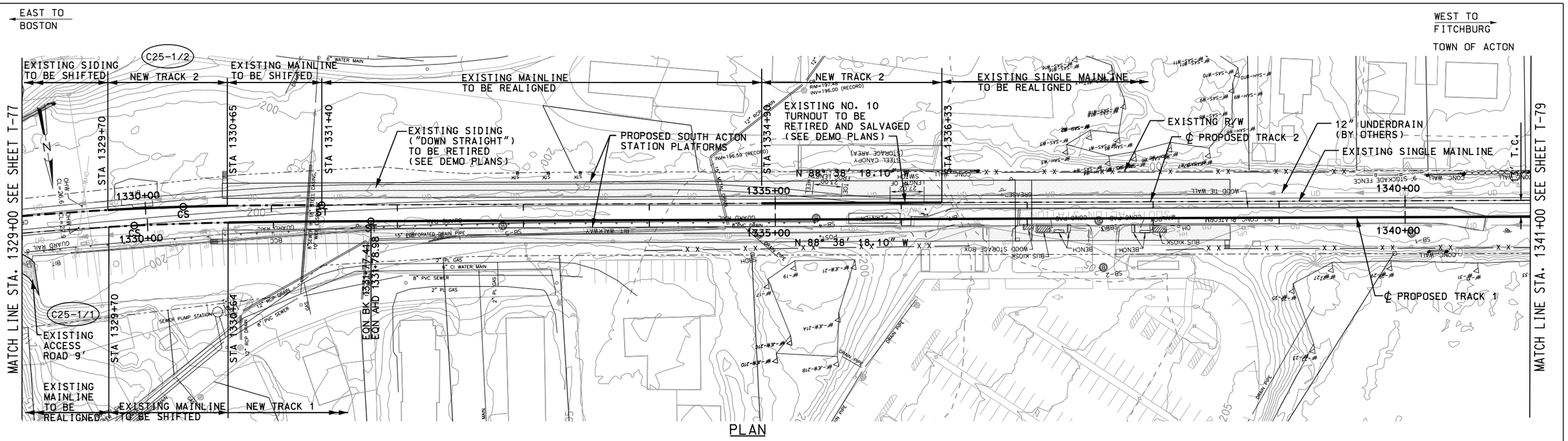

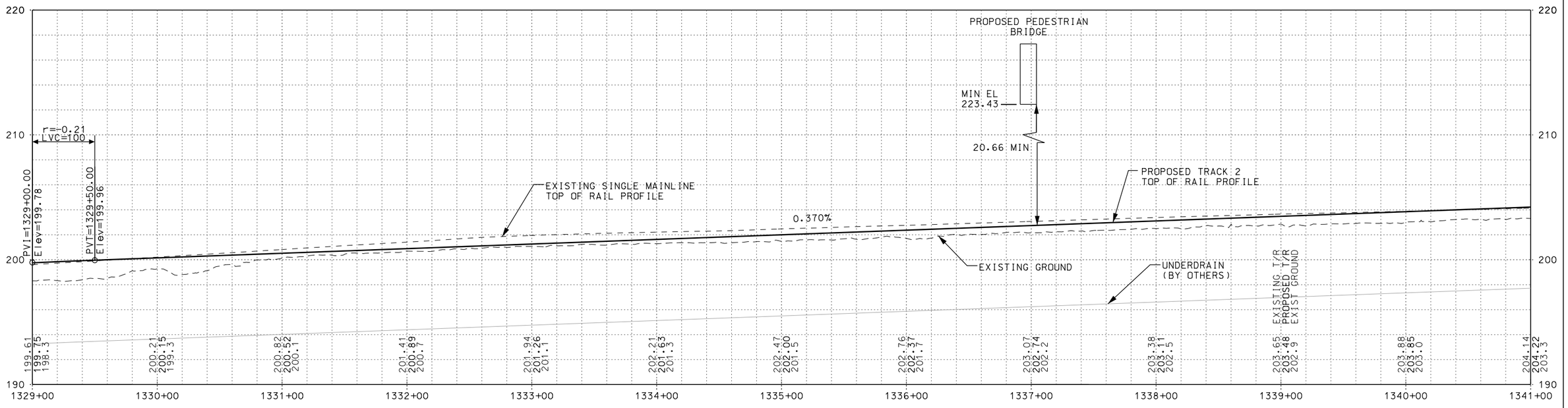

PROFILE

NOTES

1. REFER TO STAGING PLANS FOR CONSTRUCTION SEQUENCING.
2. FOR TRACK 1 PROFILE SEE SHEET T-84.

90% SUBMITTAL
NOT FOR CONSTRUCTION

HORIZ. 40 0 40 80
VERT. 4 0 4 8
(SCALE IN FEET)

ISSUE	DATE	DESCRIPTION	BY	CHKD.	APP.

MASSACHUSETTS BAY TRANSPORTATION AUTHORITY

FITCHBURG COMMUTER RAIL LINE
IMPROVEMENT PROJECT
CONTRACT NO. G67PS01

SOUTH ACTON STATION
TRACK PLAN AND PROFILE
STA. 1329+00 TO STA. 1341+00

HNTB
300 APOLLO DRIVE
CHELMSFORD, MA 01824
(978) 905-4000

MASSACHUSETTS BAY TRANSPORTATION AUTHORITY
APPROVED BY:

PROJECT MANAGER Date | PROJECT MANAGER Date

		DES. BY	DR. BY	CHK. BY
HORIZ:	AS SHOWN	SS	SS	ECD
VERT:	AS SHOWN			
DATE:	9/8/11			

PLAN NO. 168182
SHEET T-78
ISSUE

PLOT DATE: 06-SEP-2011
FILE NAME: \\ex400\prnwork\JOBS\43919 Fitchburg commuter rail\TECHPROD\Cadd\Track\Sheets\South Acton Contractor\TR-South Acton Station-003P30.dgn
XREF FILES:

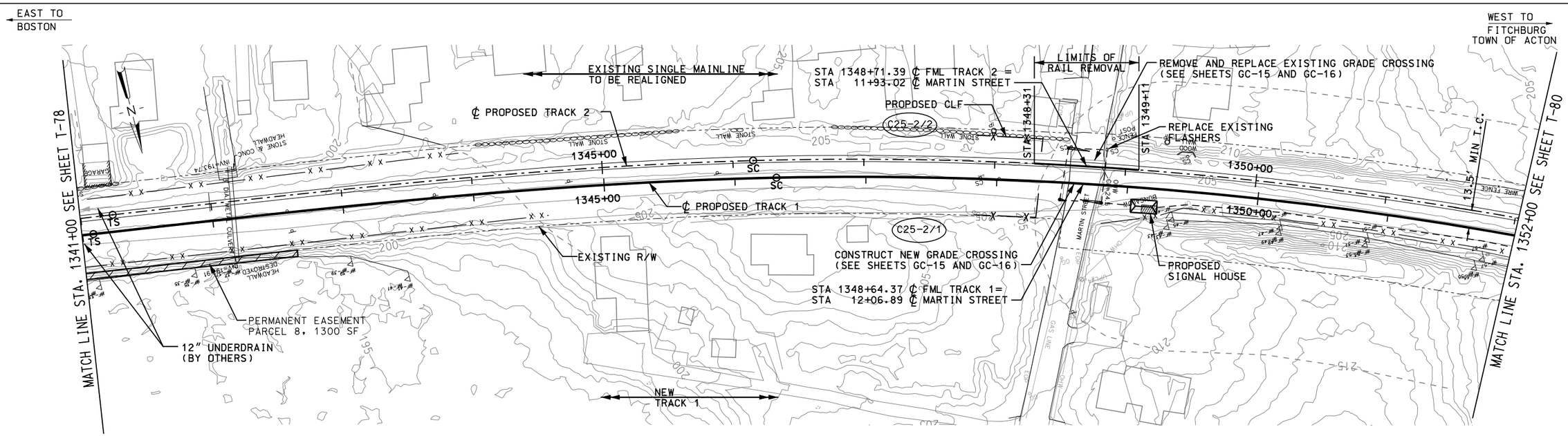

PLAN

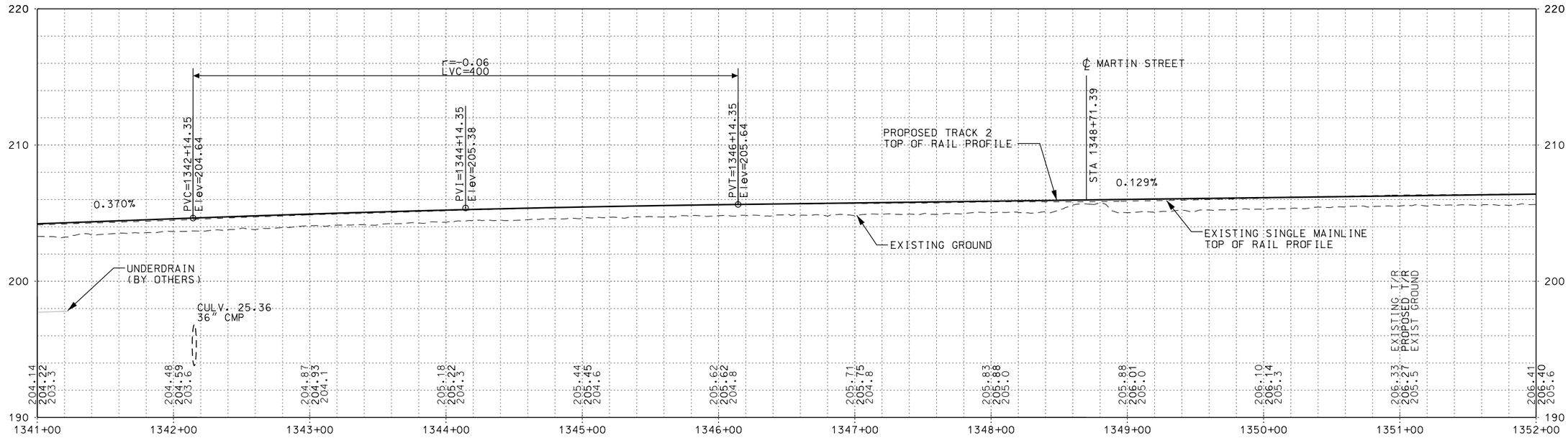

PROFILE

NOTES

1. REFER TO STAGING PLANS FOR CONSTRUCTION SEQUENCING.
2. FOR TRACK 1 PROFILE SEE SHEET T-84.

90% SUBMITTAL
NOT FOR CONSTRUCTION

HORIZ. 40 0 40 80
VERT. 4 0 4 8
(SCALE IN FEET)

MASSACHUSETTS BAY TRANSPORTATION AUTHORITY
FITCHBURG COMMUTER RAIL LINE IMPROVEMENT PROJECT
CONTRACT NO. G67PS01

SOUTH ACTON STATION TRACK PLAN AND PROFILE STA. 1341+00 TO STA. 1352+00

ISSUE	DATE	DESCRIPTION	BY	CHKD.	APP.

HNTB 300 APOLLO DRIVE CHELMSFORD, MA 01824 (978) 905-4000

PROJECT MANAGER Date

MASSACHUSETTS BAY TRANSPORTATION AUTHORITY
APPROVED BY:
PROJECT MANAGER Date

	DES. BY	DR. BY	CHK. BY
HORIZ: AS SHOWN	SS	SS	
VERT: AS SHOWN			
DATE: 9/8/11			

PLAN NO. 168183
SHEET T-79
ISSUE

PLOT DATE: 06-SEP-2011
FILE NAME: \\lexw00\pmwork\JOBS\43919 Fitchburg commuter rail\TECHPROD\Cadd\Track\Sheets\South Acton Contractor\TR-South Acton Station-004P30.dgn
XREF FILES:

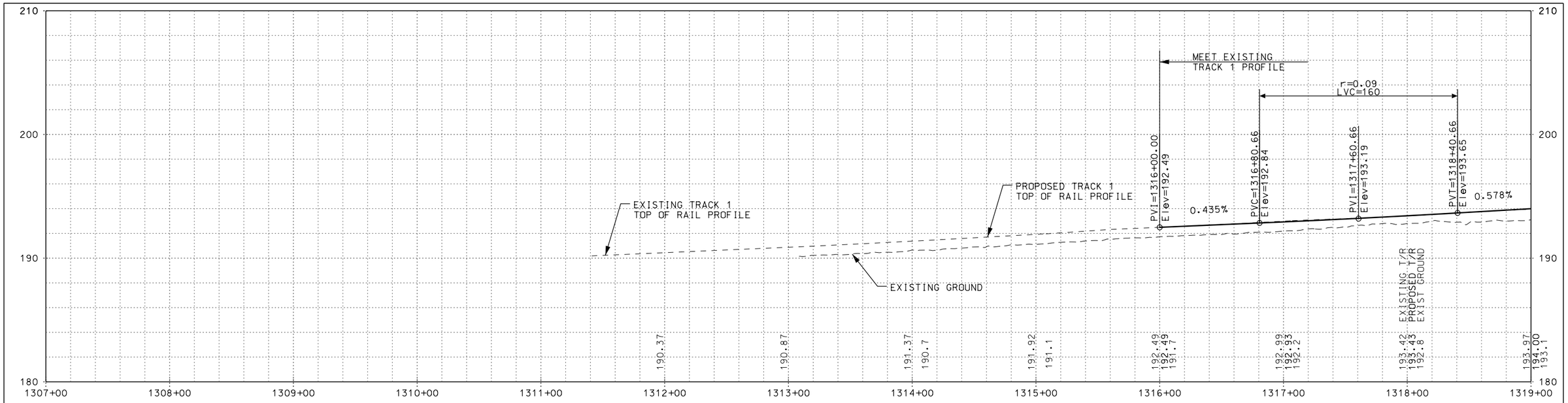

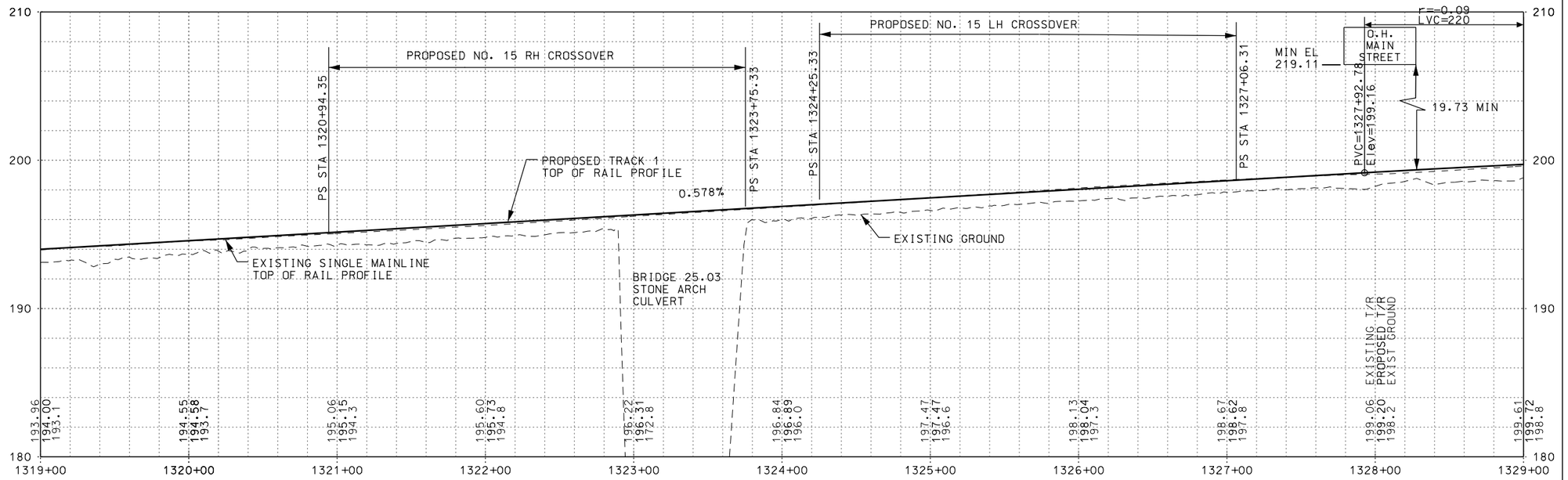

PROFILE

HORIZ. 40 0 40 80
VERT. 4 0 4 8
(SCALE IN FEET)

90% SUBMITTAL
NOT FOR CONSTRUCTION

MASSACHUSETTS BAY TRANSPORTATION AUTHORITY
FITCHBURG COMMUTER RAIL LINE
IMPROVEMENT PROJECT
CONTRACT NO. G67PS01

SOUTH ACTON STATION
TRACK 1 PROFILE
STA. 1307+00 TO STA. 1329+00

ISSUE	DATE	DESCRIPTION	BY	CHKD.	APP.

HNTB 300 APOLLO DRIVE CHELMSFORD, MA 01824 (978) 905-4000

PROJECT MANAGER Date

MASSACHUSETTS BAY TRANSPORTATION AUTHORITY
APPROVED BY:
PROJECT MANAGER Date

HORIZ: AS SHOWN	DES. BY	DR. BY	CHK. BY	PLAN NO. 168187	ISSUE
VERT: AS SHOWN	SS	SS	ECD		
DATE: 9/8/11				SHEET T-83	

PLOT DATE: 06-SEP-2011
FILE NAME: \\exw00\pmwork\JOBS\43919 Fitchburg commuter rail\TECHPROD\Cadd\Track\Sheets\South Acton Contractor\TR-South Acton Station-011P30.dgn
XREF FILES:

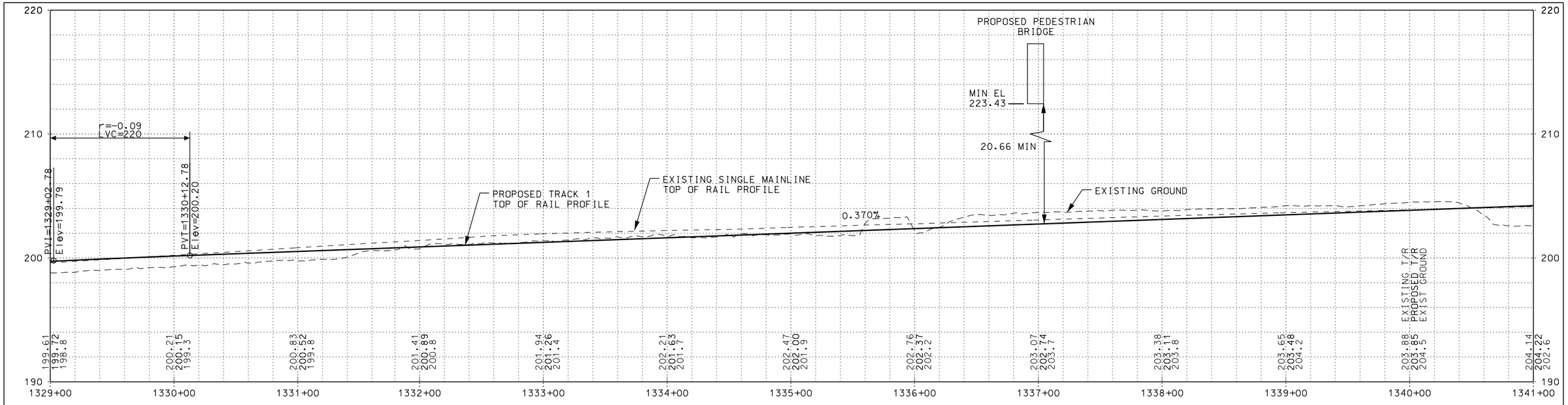

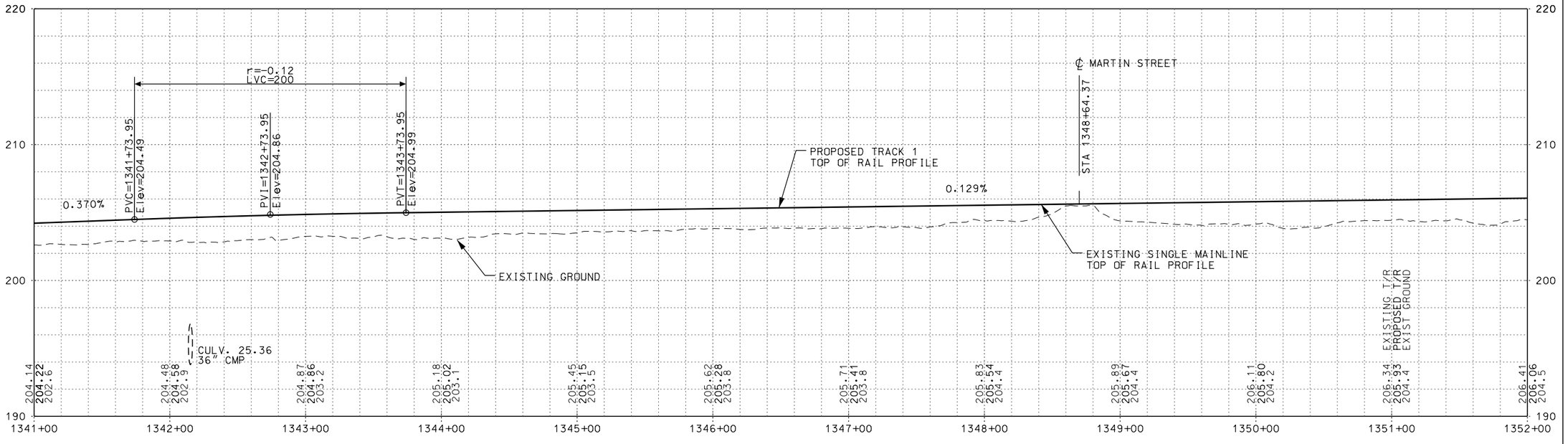

PROFILE

90% SUBMITTAL
NOT FOR CONSTRUCTION

HORIZ. 40 0 40 80
VERT. 4 0 4 8
(SCALE IN FEET)

ISSUE	DATE	DESCRIPTION	BY	CHKD.	APP.

MASSACHUSETTS BAY TRANSPORTATION AUTHORITY

FITCHBURG COMMUTER RAIL LINE
IMPROVEMENT PROJECT
CONTRACT NO. G67PS01

SOUTH ACTON STATION
TRACK 1 PROFILE
STA. 1329+00 TO STA. 1352+00

HNTB
300 APOLLO DRIVE
CHELMSFORD, MA 01824
(978) 905-4000

PROJECT MANAGER Date

MASSACHUSETTS BAY TRANSPORTATION AUTHORITY
APPROVED BY:
PROJECT MANAGER Date

	DES. BY	DR. BY	CHK. BY
HORIZ: AS SHOWN	SS	SS	ECD
VERT: AS SHOWN			
DATE: 9/8/11			

PLAN NO. 168188
SHEET T-84
ISSUE

PLOT DATE: 06-SEP-2011
FILE NAME: \\lexw00\pmwork\JOBS\43919 Fitchburg commuter rail\TECHPROD\Cadd\Track\Sheets\South Acton Contractor\TR-South Acton Station-012P30.dgn
XREF FILES:

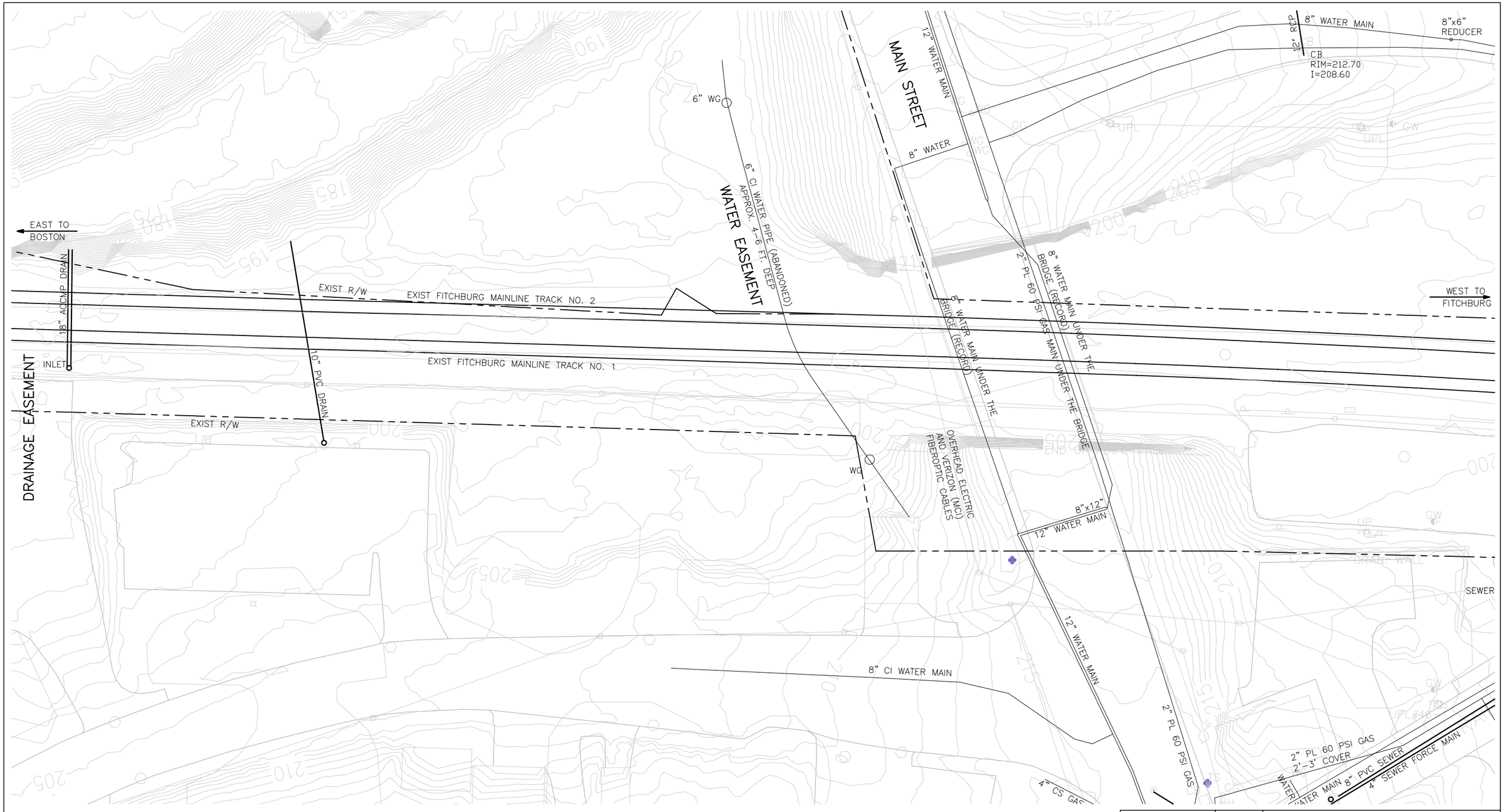

FILE NAME: M:\MBTA – Fitchburg Commuter Rail Line Improvement\Fitchburg 90%\FML Contractor Bridge and Communications Package\ACAD\G67CN01\ Acton U41-42.dwg
PLOT DATE: Sep 01, 2011 – 3:42pm

90% SUBMITTAL
NOT FOR CONSTRUCTION

HORIZ 40 0 40 80
(SCALE IN FEET)

ISSUE	DATE	DESCRIPTION	BY	CHKD.	APP.

C&C Consulting Engineers, LLC
214 LINCOLN STREET
BOSTON, MA 02134
(617) 254-6930

MASSACHUSETTS BAY TRANSPORTATION AUTHORITY

FITCHBURG COMMUTER RAIL LINE
IMPROVEMENT PROJECT
CONTRACT NO. G67CN01

EXISTING UTILITY PLAN
MAIN STREET BRIDGE EASEMENTS (MP. 25.20)
ACTON, MA

HNTB
300 APOLLO DRIVE
CHELMSFORD, MA 01824
(978) 905-4000

PROJECT MANAGER Date

MASSACHUSETTS BAY TRANSPORTATION AUTHORITY
APPROVED BY:
PROJECT MANAGER Date

HORIZ: 1"=20'	DES. BY	DR. BY	CHK. BY	PLAN NO. XXX	ISSUE
VERT:	WL	DE	SM		
DATE: 09/08/11				SHEET U-41	

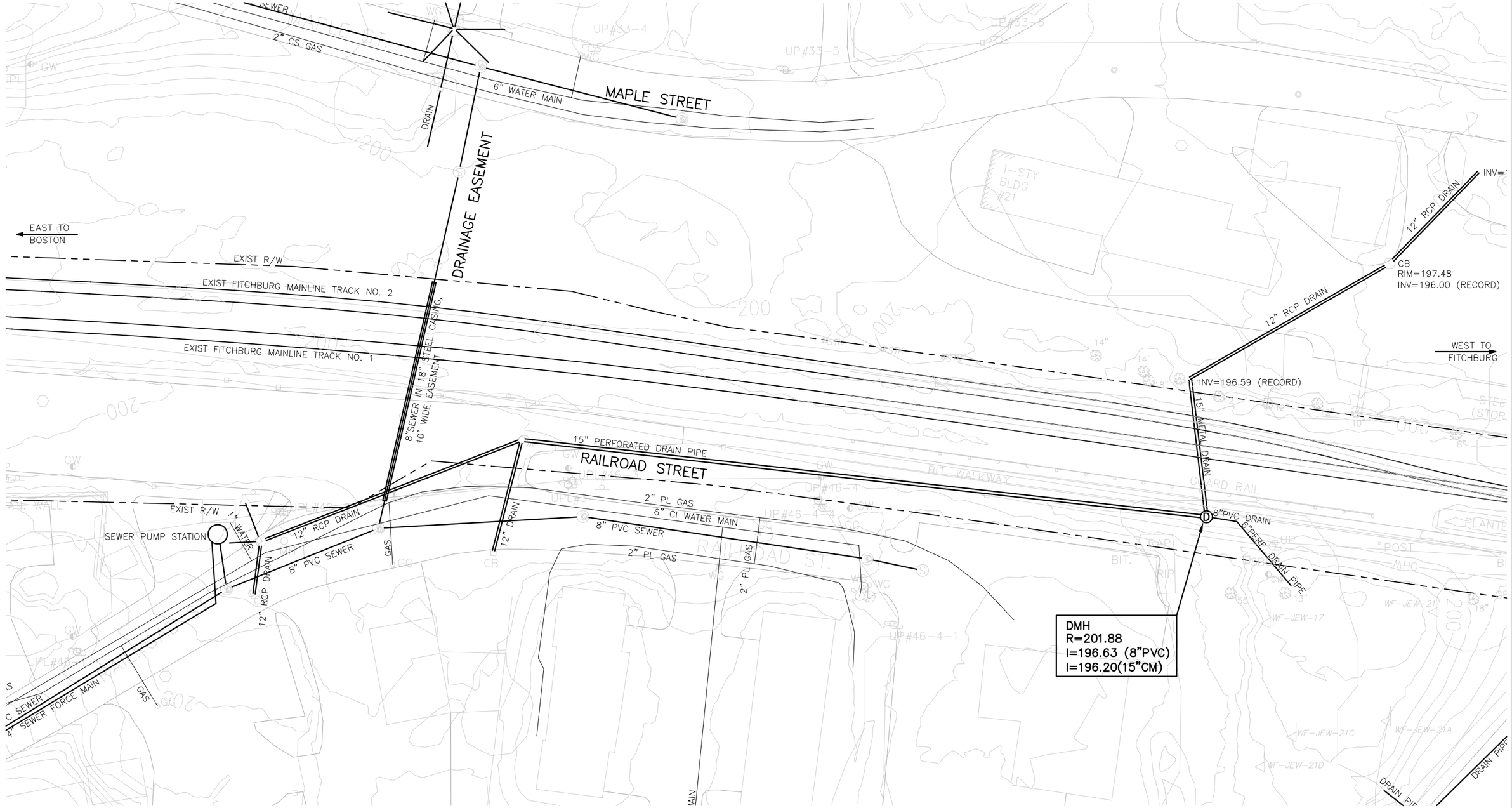

90% SUBMITTAL
NOT FOR CONSTRUCTION

HORIZ 40 0 40 80
(SCALE IN FEET)

ISSUE	DATE	DESCRIPTION	BY	CHKD.	APP.

PROJECT MANAGER Date

C&C Consulting Engineers, LLC
214 LINCOLN STREET
BOSTON, MA 02134
(617) 254-6930

HNTB
300 APOLLO DRIVE
CHELMSFORD, MA 01824
(978) 905-4000

PROJECT MANAGER Date

MASSACHUSETTS BAY TRANSPORTATION AUTHORITY

APPROVED BY:

MASSACHUSETTS BAY TRANSPORTATION AUTHORITY

FITCHBURG COMMUTER RAIL LINE
IMPROVEMENT PROJECT
CONTRACT NO. G67CN01

EXISTING UTILITY PLAN
RAILROAD STREET (MP. 25.30)
ACTON, MA

HORIZ: 1"=20'	DES. BY	DR. BY	CHK. BY	PLAN NO. XXX	ISSUE
VERT:	WL	DE	SM	SHEET U-42	
DATE: 09/08/11					

FILE NAME: M:\MBTA - Fitchburg Commuter Rail Line Improvement\Fitchburg 90%\FML Contractor Bridge and Communications Package\ACAD\G67CN01\ Acton U41-42.dwg
PLOT DATE: Sep 01, 2011 - 3:36pm

EAST TO BOSTON

WEST TO FITCHBURG

TOWN OF ACTON

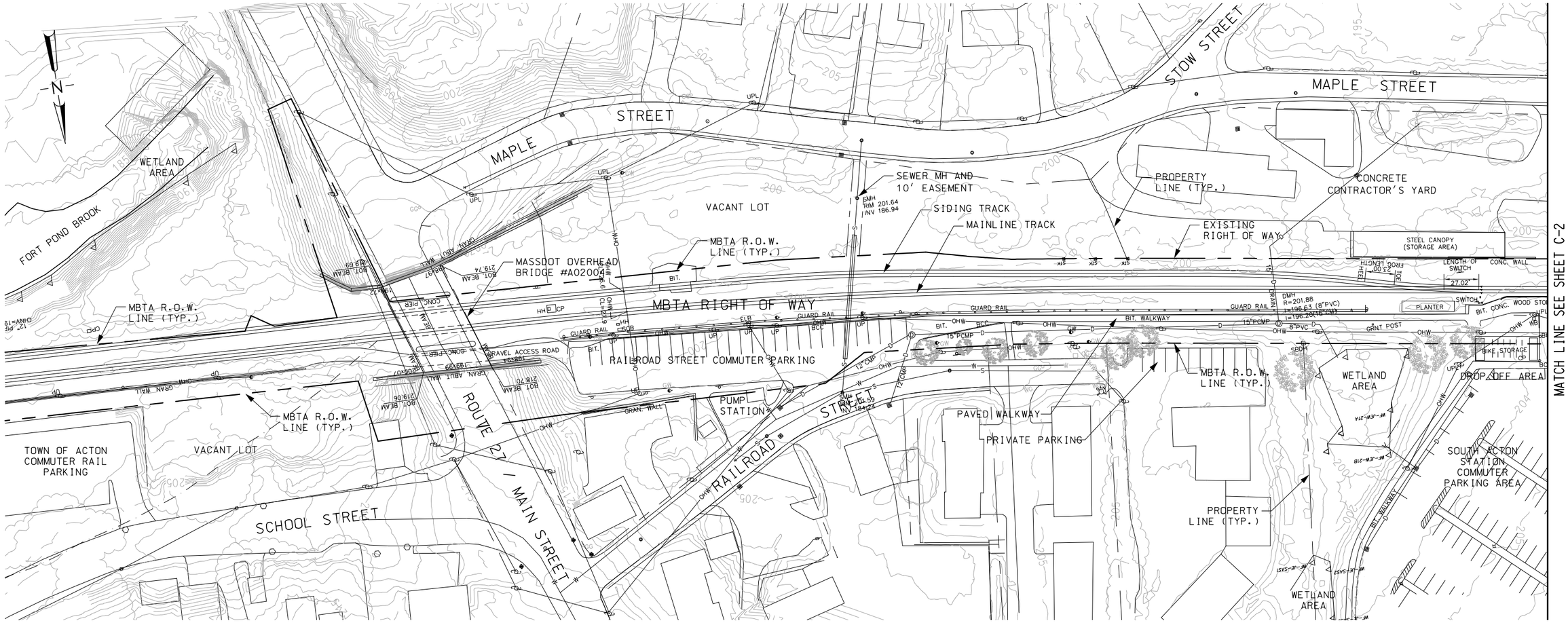

PLAN

NOTES:

1. TOPOGRAPHIC SURVEY: TOPOGRAPHIC SURVEY SHOWN IS BASED ON AN AERIAL SURVEY (LIDAR) PERFORMED BY JOHN CHANCE LAND SURVEYS, INC. IN APRIL, 2008 AND SUPPLEMENTED, AS DIRECTED, WITH GROUND SURVEY PERFORMED BY ASEC CORPORATION IN 2008 AND BRYANT ASSOCIATES IN 2010.

2. PROPERTY LINES: RIGHT OF WAY AND PROPERTY LINES WERE DEVELOPED BY REFERENCE TO RAILROAD VALUATION PLAN V.36.1, SHEETS 24 AND 25, LAST REVISION DATED APRIL 1967, AND TO TOWN OF ACTON ASSESSOR'S MAP H-2A. LOCATIONS ARE APPROXIMATE.

3. UTILITY LINES: UNDERGROUND UTILITY LINE INFORMATION WAS DEVELOPED BY REFERENCE TO THE RECORDS OF THE TOWN OF ACTON WATER DISTRICT AND ENGINEERING DEPT., NATIONAL GRID, AND OTHER UTILITIES. LOCATIONS ARE APPROXIMATE.

4. WETLANDS: WETLAND AREAS WERE DELINEATED AND CHARACTERIZED IN THE GROWING SEASON OF 2008 BY JACOBS ENGINEERING. WETLANDS FLAGS WERE SURVEY LOCATED BY ASEC IN 2008.

5. RAILROAD STREET COMMUTER PARKING AREA: THE RAILROAD STREET COMMUTER PARKING AREA IS LOCATED ON MBTA PROPERTY. ACCESS IS FROM RAILROAD STREET VIA MAIN STREET/ROUTE 27. THE LOT HAS A BITUMINOUS CONCRETE PAVEMENT SURFACE AND IS MARKED FOR 26 REGULAR PARKING SPACES AND ONE ACCESSIBLE PARKING SPACE. THERE IS GENERAL OVERHEAD LIGHTING. THE TOWN OF ACTON LEASES THIS PROPERTY FROM THE MBTA FOR PARKING PURPOSES.

6. ACTON COMMUTER PARKING AREA: THE ACTON COMMUTER PARKING AREA IS LOCATED ON TOWN OF ACTON PROPERTY. ACCESS IS FROM CENTRAL STREET TO THE NORTH. IT HAS A BITUMINOUS CONCRETE PAVEMENT SURFACE WITH RAISED ISLANDS WITH PAVERS AND PLANTINGS. THE PAVED AREA IS MARKED FOR 263 REGULAR PARKING SPACES AND 6 ACCESSIBLE PARKING SPACES. THERE IS OVERHEAD LIGHTING THROUGHOUT THE PARKING AREA. SOME PARKING SPACES ARE PERMIT SPACES AND SOME ARE METERED.

7. ZONING DISTRICT: THE STATION AREA IS WITHIN THE SOUTH ACTON VILLAGE ZONING DISTRICT AS SHOWN ON THE ZONING MAP OF THE TOWN OF ACTON AMENDED THROUGH APRIL 2005.

8. FLOODPLAINS: THE AREA IS SHOWN ON THE TOWN OF ACTON FLOOD INSURANCE RATE MAP, COMMUNITY PANEL NUMBER 250176 0003C. THE EXISTING STATION IS NOT IN A FLOODPLAIN; THE WETLAND AREA TO THE WEST OF THE STATION IS IN FLOOD ZONE "AE" TO ELEVATION 199.

9. BENCH MARKS: MASSDOT BENCHMARKS ARE LOCATED IN THE VICINITY OF THE MAIN STREET BRIDGE. FOR RAILROAD R.O.W. PROJECT SURVEY CONTROL SEE THE 'SC' DRAWINGS.

10. HABITATS: THE PROJECT AREA ENCOMPASSES NO PRIORITY HABITATS FOR RARE SPECIES, ESTIMATED HABITATS FOR RARE WILDLIFE, OR CERTIFIED VERNAL POOLS

11. GEOTECHNICAL INFORMATION: A GEOTECHNICAL EXPLORATION PROGRAM WAS CARRIED OUT IN 2009 WHICH INCLUDED SEVERAL BORINGS WITHIN THE RAILROAD RIGHT OF WAY THROUGH THE STATION AREA.

90% SUBMITTAL
NOT FOR CONSTRUCTION

HORIZ. 40 0 40 80
(SCALE IN FEET)

ISSUE	DATE	DESCRIPTION	BY	CHKD.	APP.

JACOBS
343 CONGRESS STREET
BOSTON, MA 02110
(617) 242-9222

MASSACHUSETTS BAY TRANSPORTATION AUTHORITY

FITCHBURG COMMUTER RAIL LINE
IMPROVEMENT PROJECT
CONTRACT NO. G67CN01

SOUTH ACTON STATION
EXISTING CONDITIONS PLAN
SHEET 1 OF 2

HNTB
300 APOLLO DRIVE
CHELMSFORD, MA 01824
(978) 905-4000

PROJECT MANAGER Date

MASSACHUSETTS BAY TRANSPORTATION AUTHORITY
APPROVED BY:
PROJECT MANAGER Date

HORIZ: AS SHOWN	DES. BY	DR. BY	CHK. BY	PLAN NO.	ISSUE
VERT: NONE	JPB	KMB	JM		
DATE: 9/8/11				SHEET C-1	

FILE NAME: P:\MBTA\2008\E2X37800\CAD\700CADD\702STATIONS\South Acton\Civil\90% Design\ C-1 & C-2 Existing Conditions Plans.dwg
PLOT DATE: Sep 06, 2011 - 2:50pm

EAST TO BOSTON

WEST TO FITCHBURG

TOWN OF ACTON

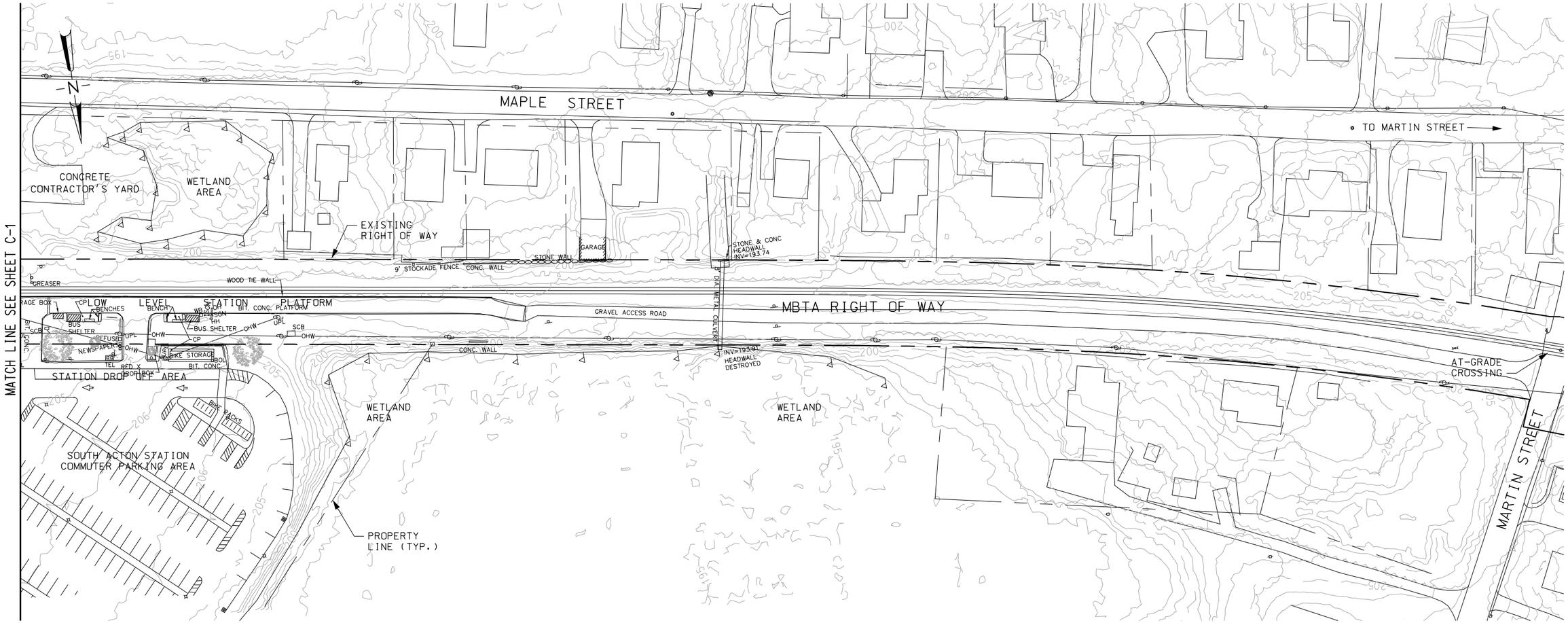

PLAN

NOTES:

1. FOR NOTES SEE SHEET C-1.

HORIZ. 40 0 40 80

(SCALE IN FEET)

90% SUBMITTAL

NOT FOR CONSTRUCTION

ISSUE	DATE	DESCRIPTION	BY	CHKD.	APP.

JACOBS
343 CONGRESS STREET
BOSTON, MA 02110
(617) 242-9222

MASSACHUSETTS BAY TRANSPORTATION AUTHORITY

FITCHBURG COMMUTER RAIL LINE
IMPROVEMENT PROJECT
CONTRACT NO. G67CN01

SOUTH ACTON STATION
EXISTING CONDITIONS PLAN
SHEET 2 OF 2

HNTB
300 APOLLO DRIVE
CHELMSFORD, MA 01824
(978) 905-4000

PROJECT MANAGER Date

MASSACHUSETTS BAY TRANSPORTATION AUTHORITY

APPROVED BY:

PROJECT MANAGER Date

HORIZ: AS SHOWN	DES. BY	DR. BY	CHK. BY	PLAN NO.	ISSUE
VERT: NONE	JPB	KMB	JM		
DATE: 9/8/11				SHEET C-2	

FILE NAME: P:\MBTA\2008\E2X3780\CAD\700CADD\702STATIONS\South Acton\Civil\90% Design\ C-1 & C-2 Existing Conditions Plans.dwg
PLOT DATE: Sep 06, 2011 - 2:50pm

EAST TO BOSTON

WEST TO FITCHBURG

TOWN OF ACTON

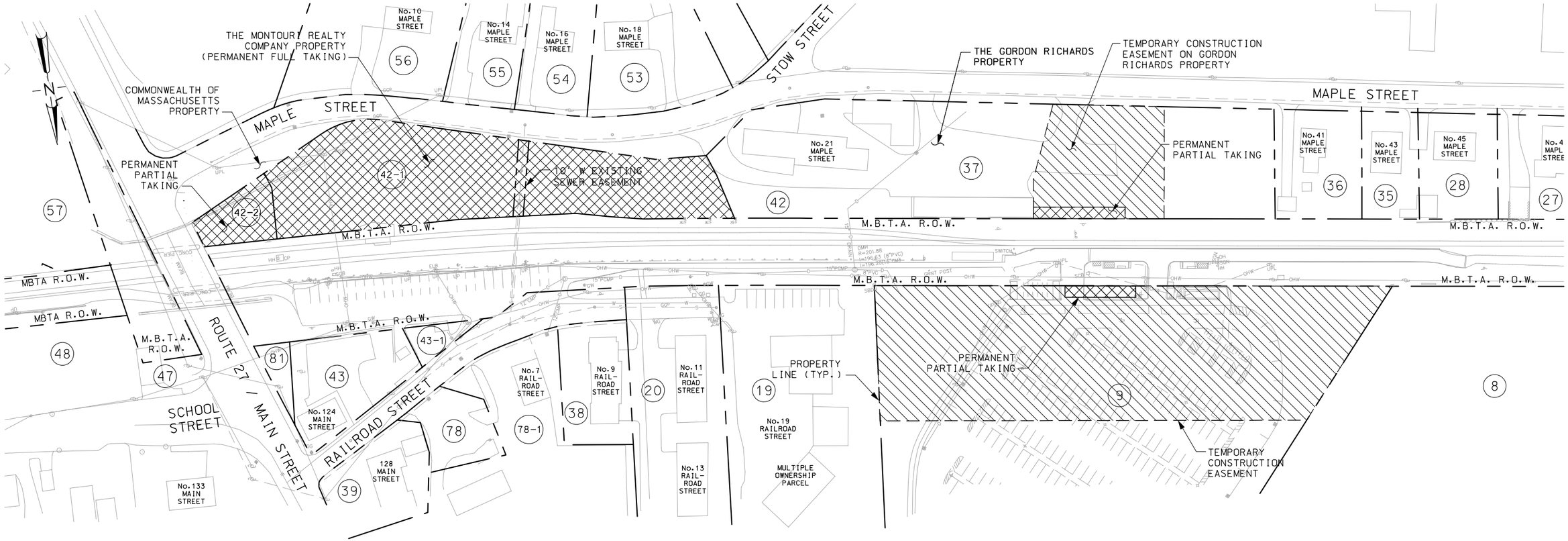

PLAN

NOTES:

1. PROPERTY LINES: PROPERTY LINES WERE DEVELOPED BY REFERENCE TO RAILROAD VALUATION PLAN V.36-1, SHEETS 24 AND 25 DATED DECEMBER 1975, AND TO TOWN OF ACTON ASSESSOR'S MAP H-2A. LOCATIONS ARE APPROXIMATE.
2. SEE SHEET C-4 FOR PROPERTY OWNERSHIP INFORMATION.

LEGEND:

(8) PARCEL NUMBER

PROPERTY LINE

HORIZ. 50 0 50 100

(SCALE IN FEET)

90% SUBMITTAL
NOT FOR CONSTRUCTION

ISSUE	DATE	DESCRIPTION	BY	CHKD.	APP.

JACOBS 343 CONGRESS STREET BOSTON, MA 02110 (617) 242-9222

HNTB 300 APOLLO DRIVE CHELMSFORD, MA 01824 (978) 905-4000

MASSACHUSETTS BAY TRANSPORTATION AUTHORITY

FITCHBURG COMMUTER RAIL LINE IMPROVEMENT PROJECT CONTRACT NO. G67CN01

SOUTH ACTON STATION RIGHT OF WAY AND PROPERTY PLAN

MASSACHUSETTS BAY TRANSPORTATION AUTHORITY

APPROVED BY:

PROJECT MANAGER Date

PROJECT MANAGER Date

HORIZ: AS SHOWN	DES. BY	DR. BY	CHK. BY	PLAN NO.	ISSUE
VERT: NONE	JPB	KMB	JM		
DATE: 9/8/11				SHEET C-3	

FILE NAME: P:\MBTA\2008\E2X37800\CAD\700CADD\702STATIONS\South Acton\Civil\90% Design\ C-3 ROW and Property Plan.dwg
PLOT DATE: Sep 06, 2011 - 3:05pm

MBTA PROPERTY ABUTTERS OWNERSHIP INFORMATION

Map	Parcel #	Lot	#	Street Name	Owner's Name	Co Grantee's Name	Mailing Address	City	State	Zip	Book/Page	Sale Date
H2	2		14	MARTIN ST	COOPER KRISTIN		14 MARTIN ST	ACTON	MA	01720	37633/ 143	1/10/2003
H2	5		77	MAPLE ST	SCANLON JOSEPH G	SCANLON KRYSKO REBECCA	77 MAPLE ST	ACTON	MA	01720	43178/ 453	6/30/2004
H2	6		75	MAPLE ST	SENNER JOHN	SENNER FAY B	75 MAPLE STREET	ACTON	MA	01720	20889/0245	11/29/1990
H2	7		14	MARTIN ST	COOPER KRISTIN		14 MARTIN ST	ACTON	MA	01720	37633/ 143	1/10/2003
H2	8		12	MARTIN ST	TOWN OF ACTON		472 MAIN STREET	ACTON	MA	01720	TL98957	2/12/2002
H2	9		4	CENTRAL ST	TOWN OF ACTON	PARKING LOT	472 MAIN STREET	ACTON	MA	01720	12943/0038	3/5/1976
H2	13		71	MAPLE ST	MILEY MARGARET	SHANLEY HARRY T	71 MAPLE ST	ACTON	MA	01720	28642/0462	5/29/1998
H2	17		65	MAPLE ST	BUCKINGHAM FORRY	BUCKINGHAM BETH E	65 MAPLE ST	ACTON	MA	01720	30960/0520	12/15/1999
H2	18		61	MAPLE ST	CHEN JENNIFER CRACKNELL		61 MAPLE ST	ACTON	MA	01720	28630/0123	5/28/1998
H2	19		19	RAILROAD ST #A1	GURTLER MICHAEL TRUSTEE		19 RAILROAD ST #A1	ACTON	MA	01720	331/19182	7/7/1998
H2	19		19	RAILROAD ST #A2	HOLT JASON M		19 RAILROAD ST #A2	ACTON	MA	01720	331/19182	7/7/1998
H2	19		19	RAILROAD ST #A3	MCMULLON LINDA D		19 RAILROAD ST #A3	ACTON	MA	01720	331/19182	7/7/1998
H2	19		19	RAILROAD ST #B1	GURTLER MICHAEL TRUSTEE		19 RAILROAD ST #B1	ACTON	MA	01720	331/19182	7/7/1998
H2	19		19	RAILROAD ST #B2	GURTLER MICHAEL TRUSTEE	RAILROAD REALTY TRUST	65 SILVER HILL ROAD	SUDBURY	MA	01776	331/19182	7/7/1998
H2	19		19	RAILROAD ST #B3	BOTTNER RICHARD		19 RAILROAD ST #B3	ACTON	MA	01720	331/19182	7/7/1998
H2	19		19	RAILROAD ST #C1	BELL KERSTIN E		PO BOX 701	S YARMOUTH	MA	02664	321/50264	10/23/2007
H2	19		19	RAILROAD ST #C2	GURTLER MICHAEL TRUSTEE	RAILROAD REALTY TRUST	65 SILVER HILL ROAD	SUDBURY	MA	01720	331/19182	7/7/1998
H2	19		19	RAILROAD ST #C3	TSUJI YUKIE L		19 RAILROAD ST #C3	ACTON	MA	01720	490/50402	11/28/2007
H2	19		19	RAILROAD ST #D1	ROBINS ELIZABETH A		19 RAILROAD ST #D1	ACTON	MA	01720	226/49036	2/25/2007
H2	19		19	RAILROAD ST #D2	JOHNSON LINDA M		19 RAILROAD ST #D2	ACTON	MA	01720	331/19182	7/7/1998
H2	19		19	RAILROAD ST #E1	GURTLER MICHAEL TRUSTEE	RAILROAD REALTY TRUST	65 SILVER HILL RD	SUDBURY	MA	01720	331/19182	7/7/1998
H2	19		19	RAILROAD ST #E2	GURTLER MICHAEL TRUSTEE		19 RAILROAD ST #E2	ACTON	MA	01720	331/19182	7/7/1998
H2	19		19	RAILROAD ST #E3	ZHANG MENG	WANG MIAOMIAO	19 RAILROAD ST #E3	ACTON	MA	01720	331/19182	7/7/1998
H2	19		19	RAILROAD ST #E4	LAMANQUE MICHELLE M		19 RAILROAD ST #E4	ACTON	MA	01720	564/48786	1/3/2007
H2	20		13	RAILROAD ST	RAILROAD STREET DEV LLC		PO BOX 985	ACTON	MA	01720	34320/ 423	12/14/2001
H2	25		57	MAPLE ST	TERAN GREGORY P	TAYLOR-TERAN LAURA K	57 MAPLE ST	ACTON	MA	01720	40690/ 551	8/29/2003
H2	26		55	MAPLE ST	ECKHARDT MARGARETHA M		55 MAPLE ST	ACTON	MA	01720	40171/ 214	7/28/2003
H2	27		49	MAPLE ST	GREGORY JILL S		49 MAPLE ST	ACTON	MA	01720	25853/0377	11/29/1995
H2	28		45	MAPLE ST	GLENN HENRY J	DIANA F	45 MAPLE ST	ACTON	MA	01720	13432/0201	5/2/1978
H2	35		43	MAPLE ST	MINKIN MAYA MARCELLA	MAXWELL GREGORY	43 MAPLE ST	ACTON	MA	01720	38332/ 060	3/14/2003
H2	36		41	MAPLE ST	HAYWARD ERNESTINE		41 MAPLE STREET	ACTON	MA	01720	06931/0469	1/22/1946
H2	37		21	MAPLE ST	RICHARDS GORDON D		60 CHARTER ROAD	ACTON	MA	01720	11658/0673	3/31/1969
H2	38		9	RAILROAD ST	RAILROAD STREET DEVELOPMENT, LLC		PO BOX 985	ACTON	MA	01720	34320/ 422	12/14/2001
H2	39		128	MAIN ST	IRON WORK FARM IN ACTON INC	C/O ANNE FORBES	PO BOX 1111	W ACTON	MA	01720	10725/0285	12/31/1964
H2	42		19	MAPLE ST	RICHARDS GORDON D		60 CHARTER ROAD	ACTON	MA	01720	37337/ 382	
H2	42	1	1	MAPLE ST	MONTOURI REALTY CO		5419 VISTA LEJANA NE	ALBUQUERQUE	NM	87111	37337/ 382	12/11/2002
H2	42	2	1	MAPLE STREET	COMMONWEALTH OF MASSACHUSETTS		DEPARTMENT OF HIGHWAYS	BOSTON	MA	02108	26620/ 363	8/29/1996
H2	43		124	MAIN ST	CHEN FRANK	ZHANG XIAO FAN	124 MAIN ST	ACTON	MA	01720	43559/ 297	8/20/2004
H2	43	1	6	RAILROAD ST	ACTON TOWN OF		472 MAIN ST	ACTON	MA	01720	31318/0060	3/28/2000
H2	47		3	SCHOOL ST	TOWN OF ACTON	TREE DEPARTMENT	472 MAIN STREET	ACTON	MA	01720	03247/0263	8/25/1906
H2	48		9	SCHOOL ST	PORRAZZO DANIEL		43 KINSLEY ROAD	ACTON	MA	01720	28252/0596	3/3/1998
H2	49		13	SCHOOL ST	TOWN OF ACTON		472 MAIN STREET	ACTON	MA	01720	20893/ END	11/30/1990
H2	57		113	MAIN ST	ERIKSON GRAIN MILL		PO BOX 2263	ACTON	MA	01720	12958/0265	4/9/1976
H2	78		3	RAILROAD ST	KINGSWOOD CORP		PO BOX 1327	LITTLETON	MA	01460	45122/ 135	5/4/2005
H2	78	1	7	RAILROAD ST	NUTTING THOMAS E		130 MAIN ST	ACTON	MA	01720	15544/ 55	4/30/1984
H2	79		16	MARTIN ST	SWEENEY JOHN P	SWEENEY ANN-MARIE MANNA	16 MARTIN STREET	ACTON	MA	01720	25240/0592	3/24/1995
H2	81		120	MAIN ST	TOWN OF ACTON		472 MAIN STREET	ACTON	MA	01720	03247/0263	8/24/1906
H2	56		10	MAPLE ST	KOZEL PETER D	YOUNG KIMBERLY A	10 MAPLE ST	ACTON	MA	01720	44668/352	3/29/2005
H2	55		14	MAPLE ST	MIGUELEZ AVELINO		14 MAPLE ST	ACTON	MA	01720	50916/449	3/21/2008
H2	54		16	MAPLE ST	HANLEY SEAN P	HANLEY CHRISTINE L	16 MAPLE ST	ACTON	MA	01720	36150/609	8/16/2002
H2	53		18	MAPLE ST	MANNING STEVEN T		18 MAPLE ST	ACTON	MA	01720	32111/0208	12/7/2000
H2	62		2	STOW ST	CAOUETTE FRANCES + MARY ANN TRUSTEE SIMONE JOHN E TRUSTEE	THE SIMON IRRECOVABLE TRUST	90 MARTIN ST	ACTON	MA	01720	31063/229	1/19/2000

90% SUBMITTAL
NOT FOR CONSTRUCTION

NOTES:

1. PROPERTY OWNERSHIP INFORMATION: THE MBTA ABUTTER INFORMATION CONTAINED IN THE TABLE AT LEFT WAS PROVIDED BY THE TOWN OF ACTON ASSESSOR'S OFFICE BETWEEN 2008 AND 2010.

MASSACHUSETTS BAY TRANSPORTATION AUTHORITY

FITCHBURG COMMUTER RAIL LINE
IMPROVEMENT PROJECT
CONTRACT NO. G67CN01

SOUTH ACTON STATION
RIGHT OF WAY
AND PROPERTY OWNERSHIP DATA

ISSUE	DATE	DESCRIPTION	BY	CHKD.	APP.

HNTB 300 APOLLO DRIVE CHELMSFORD, MA 01824 (978) 905-4000

PROJECT MANAGER Date

MASSACHUSETTS BAY TRANSPORTATION AUTHORITY

APPROVED BY:

PROJECT MANAGER Date

JACOBS 343 CONGRESS STREET BOSTON, MA 02110 (617) 242-9222

HORIZ: AS SHOWN	DES. BY	DR. BY	CHK. BY	PLAN NO.	ISSUE
VERT: NONE	JPB	KMB	JM		
DATE: 9/8/11				SHEET C-4	

FILE NAME: P:\MBTA\2008\E2X37800\CAD\700CADD\702STATIONS\South Acton\Civil\90% Design\ C-4 ROW and Property Plan Info.dwg
PLOT DATE: Aug 04, 2011 - 5:37pm

EAST TO BOSTON

WEST TO FITCHBURG

TOWN OF ACTON

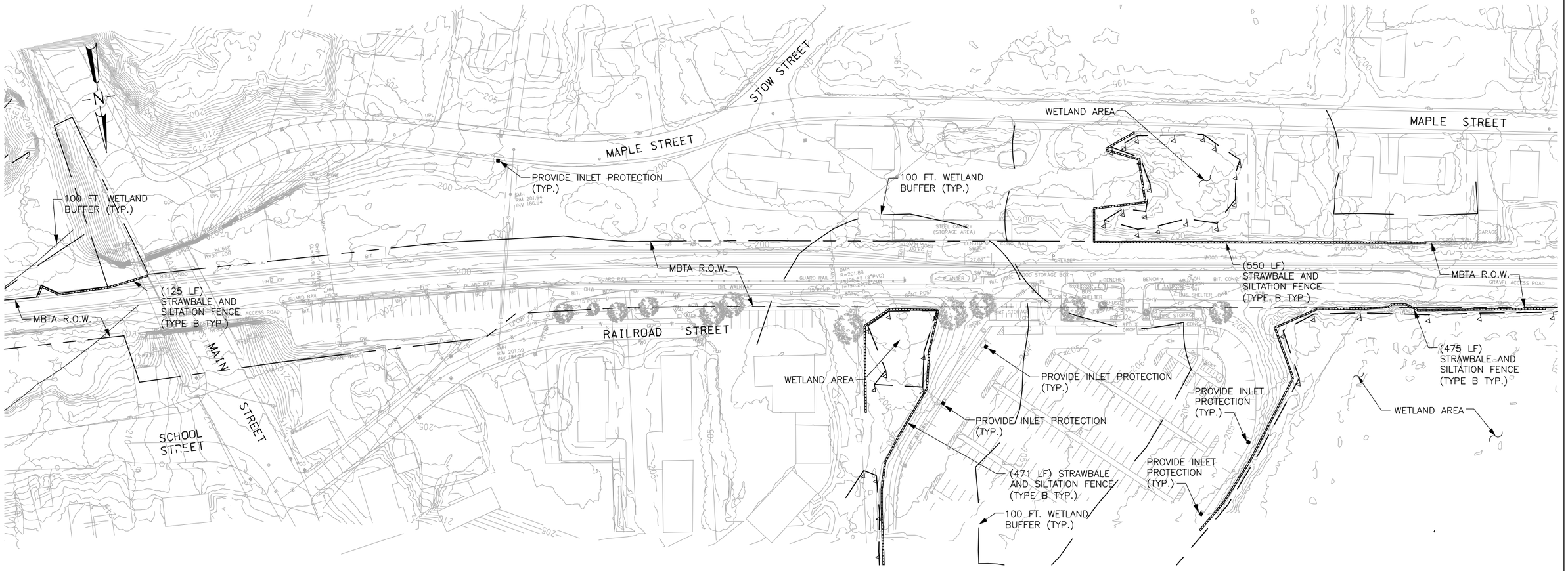

PLAN

NOTES:

1. EROSION CONTROL MEASURES SHALL BE INSPECTED AND MAINTAINED IN ACCORDANCE WITH THE STORM WATER POLLUTION PREVENTION PLAN (SWPPP). SEE SPECIFICATIONS FOR DETAILS.
2. OTHER EROSION CONTROL MEASURES MAY BE NECESSARY OTHER THAN THOSE EXPLICITYLY SHOWN ON THIS DRAWING.

HORIZ. 50 0 50 100

(SCALE IN FEET)

90% SUBMITTAL
NOT FOR CONSTRUCTION

ISSUE	DATE	DESCRIPTION	BY	CHKD.	APP.

JACOBS
343 CONGRESS STREET
BOSTON, MA 02110
(617) 242-9222

MASSACHUSETTS BAY TRANSPORTATION AUTHORITY

FITCHBURG COMMUTER RAIL LINE
IMPROVEMENT PROJECT
CONTRACT NO. G67CN01

SOUTH ACTON STATION
EROSION CONTROL PLAN

HNTB
300 APOLLO DRIVE
CHELMSFORD, MA 01824
(978) 905-4000

PROJECT MANAGER Date

MASSACHUSETTS BAY TRANSPORTATION AUTHORITY

APPROVED BY:

PROJECT MANAGER Date

HORIZ: AS SHOWN	DES. BY	DR. BY	CHK. BY	PLAN NO.	ISSUE
VERT: NONE	MDeC	KMB	LHC		
DATE: 9/8/11				SHEET C-5	

FILE NAME: P:\MBTA\2008\E2X37800\CAD\700CADD\702STATIONS\South Acton\Civil\90% Design\ C-5 Erosion Control Plan.dwg
PLOT DATE: Sep 06, 2011 - 3:40pm

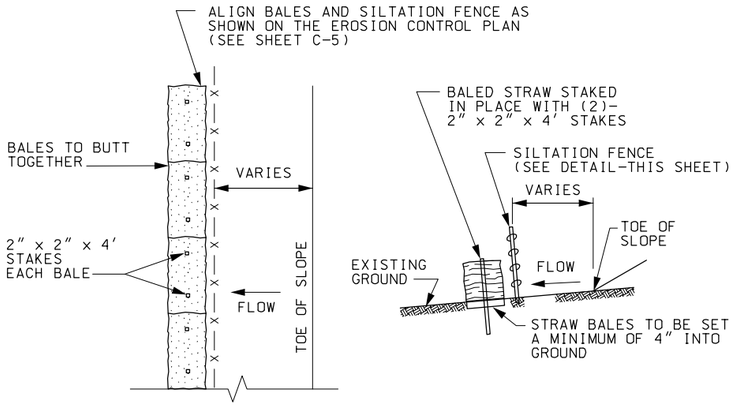

PLAN ELEVATION

NOTE:

1. TO BE USED WHERE THE EXISTING GROUND SLOPES AWAY FROM THE EMBANKMENT

BALED STRAW EROSION CHECKS TYPE "B"

N.T.S.

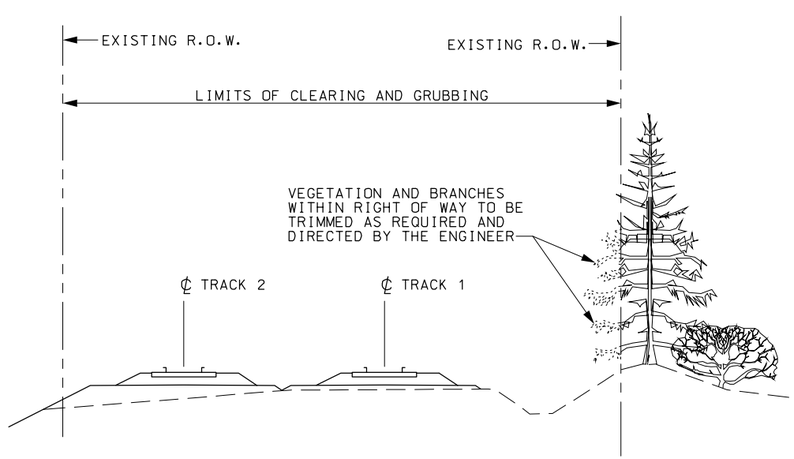

VEGETATION CLEARANCE LIMITS

N.T.S.

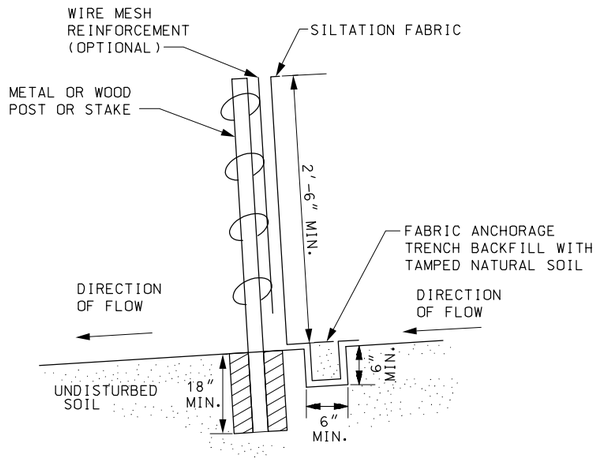

NOTES:

1. ATTACH FABRIC TO WIRE MESH WITH HOG RINGS, STEEL POSTS WITH TIE WIRES, OR WOOD POSTS WITH STAPLES.
2. SPLICES SHALL BE MADE AT FENCE POSTS. FABRIC SHALL BE OVERLAPPED 6" AND SECURELY FASTENED.
3. POST SPACING SHALL BE A MAXIMUM OF 4' O.C. WITHOUT SUPPORTING WIRE MESH, OR 10' O.C. WITH WIRE MESH.
4. POSTS SHALL BE 4" DIAMETER WOOD OR STEEL WEIGHING NOT LESS THAN 1.3 LB/LIN. FT.

SILTATION FENCE DETAIL

N.T.S.

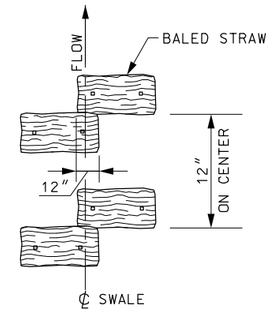

PLAN

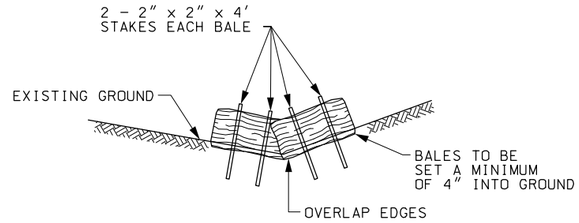

ELEVATION

NOTES:

1. TO BE USED WHERE THE EXISTING GROUND SLOPES TOWARD THE EMBANKMENT.
2. ALL SILTATION BARRIERS SHALL BE BALED STRAW, UNLESS OTHERWISE SHOWN ON THE PLANS.

BALED STRAW EROSION CHECKS TYPE "A"

N.T.S.

NOTES:

1. EROSION CONTROL MEASURES SHALL BE INSPECTED AND MAINTAINED IN ACCORDANCE WITH THE STORM WATER POLLUTION PREVENTION PLAN (SWPPP). SEE SPECIFICATIONS FOR DETAILS.

90% SUBMITTAL
NOT FOR CONSTRUCTION

FILE NAME: P:\MBTA\2008\E2X37800\CAD\700CADD\702STATIONS\South Acton\Civil\90% Design\ C-6 Erosion Control Details.dwg
PLOT DATE: Sep 06, 2011 - 3:43pm

ISSUE	DATE	DESCRIPTION	BY	CHKD.	APP.

JACOBS 343 CONGRESS STREET BOSTON, MA 02110 (617) 242-9222

HNTB 300 APOLLO DRIVE CHELMSFORD, MA 01824 (978) 905-4000

PROJECT MANAGER Date

MASSACHUSETTS BAY TRANSPORTATION AUTHORITY

APPROVED BY:

PROJECT MANAGER Date

MASSACHUSETTS BAY TRANSPORTATION AUTHORITY

FITCHBURG COMMUTER RAIL LINE IMPROVEMENT PROJECT CONTRACT NO. G67CN01

SOUTH ACTON STATION EROSION CONTROL DETAILS

HORIZ: AS SHOWN	DES. BY	DR. BY	CHK. BY	PLAN NO.	ISSUE
VERT: NONE	MDeC	CWB	JM		
DATE: 9/8/11				SHEET C-6	

EAST TO BOSTON

WEST TO FITCHBURG

TOWN OF ACTON

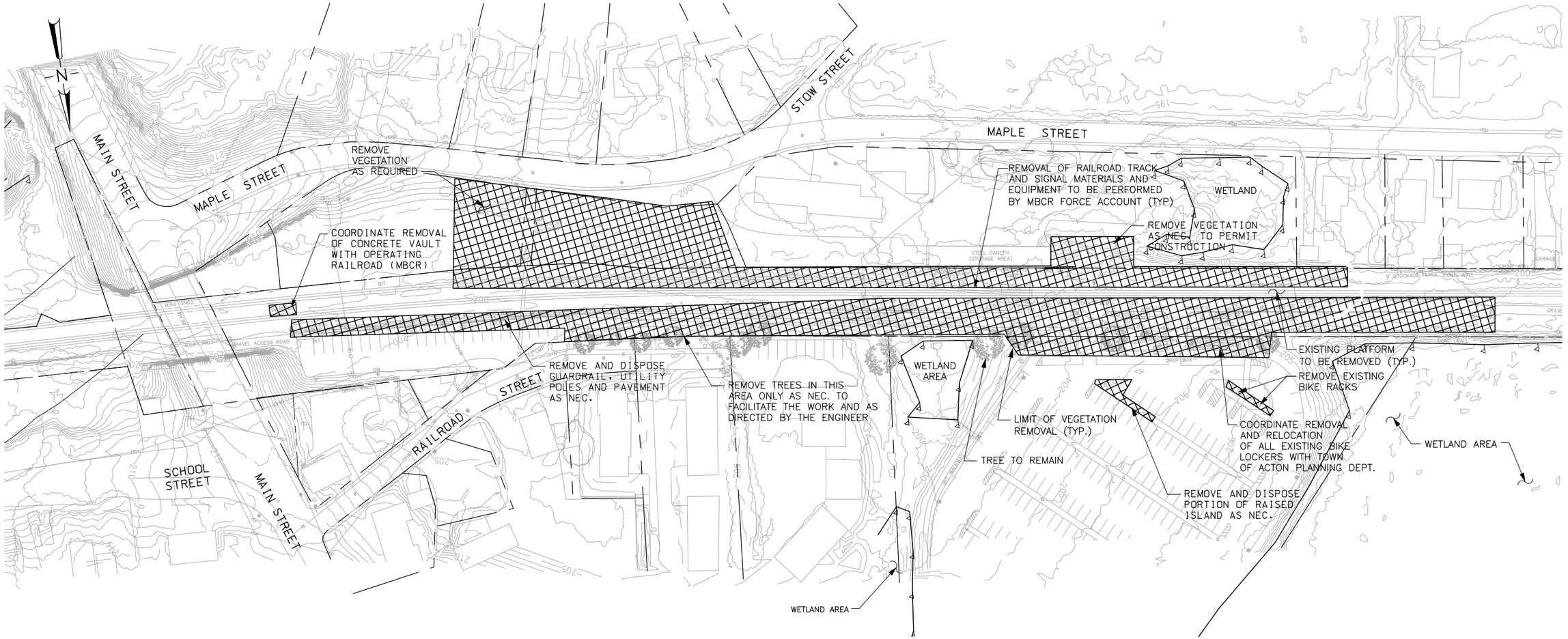

PLAN

NOTES:

1. ALL DEMOLITION MATERIAL SHALL BE DISPOSED OF IN ACCORDANCE WITH THE PROJECT SPECIFICATIONS.
2. SALVAGEABLE MATERIAL NOT OWNED BY THE MBTA SHALL BE MADE AVAILABLE TO TOWN OF ACTON AUTHORITIES FOR HANDLING.

LEGEND:

PROPOSED DEMOLITION

HORIZ. 50 0 50 100

(SCALE IN FEET)

90% SUBMITTAL
NOT FOR CONSTRUCTION

ISSUE	DATE	DESCRIPTION	BY	CHKD.	APP.

JACOBS
343 CONGRESS STREET
BOSTON, MA 02110
(617) 242-9222

MASSACHUSETTS BAY TRANSPORTATION AUTHORITY

FITCHBURG COMMUTER RAIL LINE
IMPROVEMENT PROJECT
CONTRACT NO. G67CN01

SOUTH ACTON STATION
DEMOLITION PLAN

HNTB
300 APOLLO DRIVE
CHELMSFORD, MA 01824
(978) 905-4000

PROJECT MANAGER Date

MASSACHUSETTS BAY TRANSPORTATION AUTHORITY
APPROVED BY:
PROJECT MANAGER Date

HORIZ: AS SHOWN	DES. BY	DR. BY	CHK. BY	PLAN NO.	ISSUE
VERT: NONE	JPB	KMB	JGA		
DATE: 9/8/11				SHEET C-7	

FILE NAME: P:\MBTA\2008\E2X37800\CAD\700CADD\702STATIONS\South Acton\Civil\90% Design\ C-7 Demolition Plan.dwg
PLOT DATE: Sep 06, 2011 - 4:01pm

EAST TO BOSTON

WEST TO FITCHBURG

TOWN OF ACTON

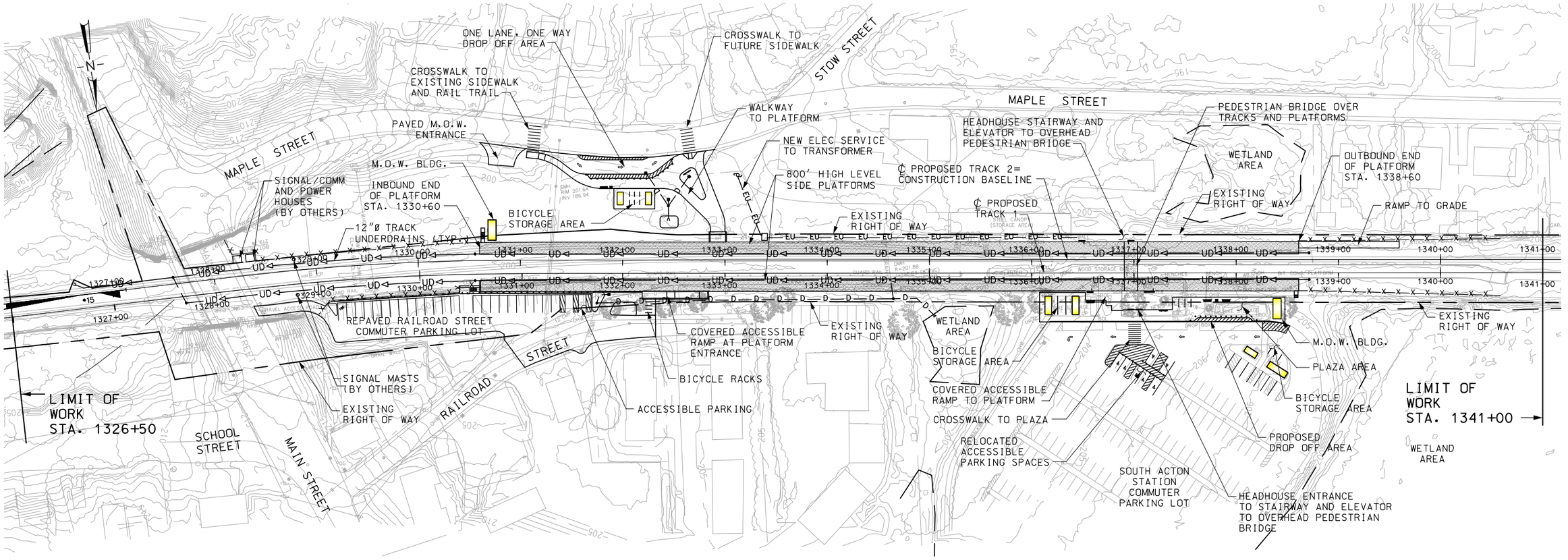

PLAN

NOTES:

1. FOR GENERAL NOTES SEE SHEET G-3.
2. FOR ARCHITECTURAL DRAWINGS SEE 'A' SHEETS.
3. FOR STRUCTURAL DRAWINGS SEE 'S' SHEETS.

LEGEND:

PLATFORM, STAIRS AND ELEVATORS

HORIZ. 50 0 50 100

(SCALE IN FEET)

90% SUBMITTAL
NOT FOR CONSTRUCTION

ISSUE	DATE	DESCRIPTION	BY	CHKD.	APP.

JACOBS
343 CONGRESS STREET
BOSTON, MA 02110
(617) 242-9222

MASSACHUSETTS BAY TRANSPORTATION AUTHORITY

FITCHBURG COMMUTER RAIL LINE
IMPROVEMENT PROJECT
CONTRACT NO. G67CN01

SOUTH ACTON STATION
GENERAL SITE PLAN

HNTB
300 APOLLO DRIVE
CHELMSFORD, MA 01824
(978) 905-4000

PROJECT MANAGER Date

MASSACHUSETTS BAY TRANSPORTATION AUTHORITY

APPROVED BY:

PROJECT MANAGER Date

HORIZ: AS SHOWN	DES. BY	DR. BY	CHK. BY
VERT: NONE	JPB	KMB	JM
DATE: 9/8/11			

PLAN NO.

SHEET C-8

ISSUE

FILE NAME: P:\MBTA\2008\E2X37800\CAD\700CADD\702STATIONS\South Acton\Civil\90% Design\ C-8 Overall Site Plan.dwg
PLOT DATE: Sep 06, 2011 - 4:19pm

EAST TO BOSTON

WEST TO FITCHBURG

TOWN OF ACTON

MATCH LINE STA. 1333+50 SEE SHEET C-10

MAPLE STREET

MAIN STREET

RAILROAD STREET

GRAVEL ACCESS ROAD

CROSSWALK TO EXISTING SIDEWALK

SIDEWALK TO MEET EXISTING GRADE AT CROSSWALK

ONE LANE, ONE WAY DROP OFF AREA

CROSSWALK CONNECTION TO FUTURE SIDEWALK

ACCESSIBLE RAMP (SEE SITE DETAILS)

PROP CB (TYP)

BIT CONC SIDEWALK (TYP)

6"Ø BOLLARD, 6'O.C. (TYPICAL)

LEVEL PASSENGER LOADING ZONE

LANDSCAPED AREA

4.8% SLOPED BIT CONC WALKWAY TO PLATFORM

PAVED DRIVEWAY APRON FOR M.O.W. ACCESS

PROPERTY TO BE ACQUIRED

UNDERDRAIN CLEANOUT (TYP)

EMERGENCY EGRESS STAIRWAY FROM PLATFORM

M.O.W. STORAGE BOX

BICYCLE STORAGE AREA

ELEC SERVICE DUCTBANK TO TRANSFORMER

STORMWATER BIORETENTION AREA

CANOPY ABOVE

PLATFORM ENTRANCE

℄ FENCE

12"Ø TRACK UNDERDRAIN (TYP)

PROPOSED ℄ TRACK 2 & CONST. BASELINE (SEE TRACK PLANS FOR GEOMETRY)

EXISTING RIGHT OF WAY

PROPOSED ℄ TRACK 1

OUTLET UNDERDRAIN AT STA.1326+60

SIGNAL MASTS (BY MBCR)

PROP DMH

M.O.W. ACCESS GATES

CONC. VAULT TO BE REMOVED (SEE NOTE 1)

CONC. PIPE UNDER TRACKS

6' TRACK-SIDE FENCING

800' LONG, HIGH LEVEL SIDE PLATFORMS

SIGNAL AND POWER HOUSES (BY MBCR)

M.O.W. ACCESS GATE

MILL & OVERLAY RAILROAD STREET COMMUTER PARKING LOT

WOOD GUARD RAIL

WATER LINE TO PLATFORM

CANOPY ABOVE

SLOPED RAMP TO PLATFORM

NEW DRAIN LINE

BIKE RACKS AND PATH TO PLATFORM

LIMIT OF PAVEMENT

EXISTING UTILITY POLE TO REMAIN

PROPOSED CB

LANDSCAPED ISLAND

PROPOSED DMH

PAVED BERM AROUND CB

LIMITS OF PAVEMENT

PROP DMH

PLATFORM GATE TO EMERGENCY EGRESS STAIRWAY

TWO ACCESSIBLE PARKING SPACES

LIMIT OF PAVEMENT

EXISTING RIGHT OF WAY

1328+00 1329+00 1330+00 1331+00 1332+00 1333+00

SMH RIM 201.64 INV 186.94

RIM 201.59 INV 184.24

PLAN – EAST END

NOTES:

1. CONTRACTOR SHALL COORDINATE WITH MBCR TO REMOVE AND DISPOSE OF CONCRETE VAULT. PRIOR TO REMOVAL AND DISPOSAL ENSURE THERE ARE NO OPERATING UTILIIES BURIED BENEATH THE SAND AND DIRT WITHIN THE VAULT. IF ACTIVE UTILITIES ARE FOUND ARRANGE FOR APPROPRIATE RELOCATION AS REQUIRED.

2. FOR CONSTRUCTION BASELINE DATA SEE 'T' PLANS.

LEGEND:

PLATFORM, STAIRS AND ELEVATORS

20 0 20 40

SCALE IN FEET

90% SUBMITTAL
NOT FOR CONSTRUCTION

ISSUE	DATE	DESCRIPTION	BY	CHKD.	APP.

JACOBS 343 CONGRESS STREET BOSTON, MA 02110 (617) 242-9222

HNTB 300 APOLLO DRIVE CHELMSFORD, MA 01824 (978) 905-4000

MASSACHUSETTS BAY TRANSPORTATION AUTHORITY

FITCHBURG COMMUTER RAIL LINE IMPROVEMENT PROJECT CONTRACT NO. G67CN01

SOUTH ACTON STATION SITE PLAN – EAST END SHEET 1 OF 2

MASSACHUSETTS BAY TRANSPORTATION AUTHORITY

APPROVED BY:

PROJECT MANAGER Date

PROJECT MANAGER Date

HORIZ: AS SHOWN	DES. BY	DR. BY	CHK. BY
VERT: NONE	JPB	KMB	JM
DATE: 9/8/11			

PLAN NO. SHEET C-9

ISSUE

FILE NAME: P:\MBTA\2008\E2x37800\CAD\700CADD\702STATIONS\South Acton\Civil\90% Design\ C-9 & C-10 Site Plans.dwg
PLOT DATE: Sep 06, 2011 – 4:51pm

EAST TO BOSTON

WEST TO FITCHBURG

TOWN OF ACTON

MATCH LINE STA. 1333+50 SEE SHEET C-9

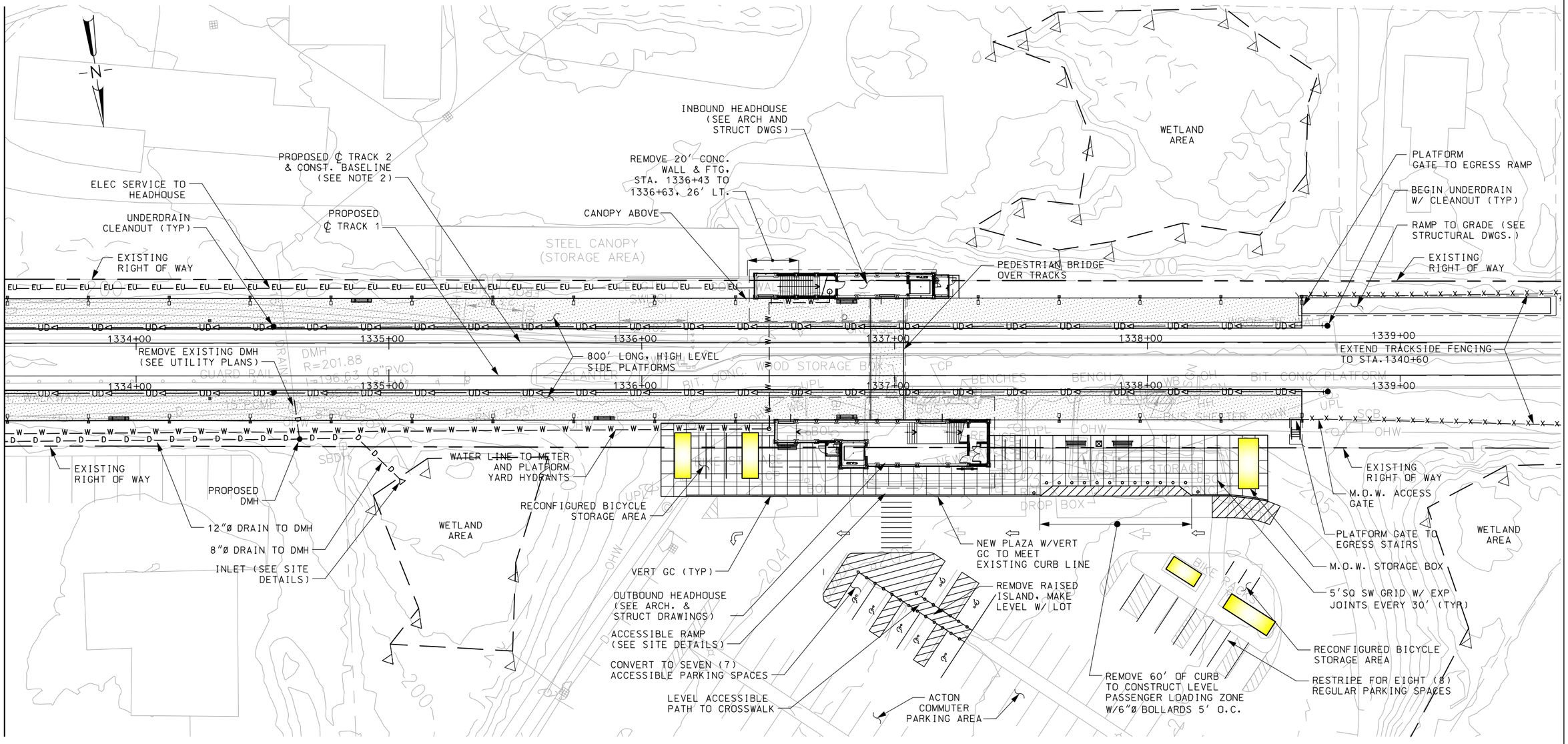

PLAN – WEST END

NOTES:

1. FOR HEADHOUSE PLANS AND DETAILS SEE ARCHITECTURAL AND STRUCTURAL DRAWINGS.
2. FOR CONSTRUCTION BASELINE DATA SEE 'T' PLANS.

LEGEND:

PLATFORM, STAIRS AND ELEVATORS

20 0 20 40
SCALE IN FEET

90% SUBMITTAL
NOT FOR CONSTRUCTION

FILE NAME: P:\MBTA\2008\E2X37800\CAD\700CADD\702STATIONS\South Acton\Civil\90% Design\ C-9 & C-10 Site Plans.dwg
PLOT DATE: Sep 06, 2011 – 4:52pm

ISSUE	DATE	DESCRIPTION	BY	CHKD.	APP.

JACOBS
343 CONGRESS STREET
BOSTON, MA 02110
(617) 242-9222

MASSACHUSETTS BAY TRANSPORTATION AUTHORITY

FITCHBURG COMMUTER RAIL LINE
IMPROVEMENT PROJECT
CONTRACT NO. G67CN01

SOUTH ACTON STATION
SITE PLAN – WEST END
SHEET 2 OF 2

HNTB
300 APOLLO DRIVE
CHELMSFORD, MA 01824
(978) 905-4000

PROJECT MANAGER Date

MASSACHUSETTS BAY TRANSPORTATION AUTHORITY
APPROVED BY:
PROJECT MANAGER Date

	DES. BY	DR. BY	CHK. BY
HORIZ: AS SHOWN	JPB	KMB	JM
VERT: NONE			
DATE: 9/8/11			

PLAN NO. SHEET C-10
ISSUE

EAST TO BOSTON

WEST TO FITCHBURG

TOWN OF ACTON

MAPLE STREET

MAIN STREET

RAILROAD STREET

PROP DMH
STA 1327+60, 6.5' LT
RIM EL=198.0
INV IN=195.23 (RCP)
INV IN=195.00 (UD)
INV OUT=194.96 (UD)

6' CLF ALONG RIGHT OF WAY

PROPOSED ℄ TRACK 2 & CONST. BASELINE (SEE TRACK PLANS FOR GEOMETRY)

PROPOSED ℄ TRACK 1

UNDERDRAIN CLEANOUT STA 1330+50, 6.5' LT

PROPERTY TO BE ACQUIRED

BIT CONC APRON TO MEET EXISTING

SLOPE SIDEWALK TO MEET EXISTING GRADE

CLEAN EXISTING CB AND 50 FT. OF DOWNSTREAM PIPE

VERT GC

PROP CB
RIM EL=200.5
INV OUT=198.5

20'-12"Ø PIPE

PROP CB,
RIM EL=200.5,
INV OUT=198.25

32'-12"Ø DRAIN PIPE

PROP CB
RIM EL=200.75
INV OUT=198.5

PROP BIT CONC TO MEET EXISTING EDGE OF PVMT

LANDSCAPED AREA

PROP DMH, STA 1332+15, 64' LEFT
RIM EL=201.5
INV IN=198.25 (12")
INV IN=198.00 (12")
INV IN=198.00 (12")
INV OUT=197.75

3:1 SIDE SLOPES, LOAM & SEED

BIT CONC WALKWAY

6" CONC PAD

DRAIN OUTLET EL=197.5

RIPRAP REINF SPILLWAY

EXISTING RIGHT OF WAY

800' LONG, HIGH LEVEL SIDE PLATFORMS

CONC PAD W/ BOLLARDS AT BASE OF STAIRWAY (SEE STRUCT PLANS)

8'-12"Ø DRAIN PIPE

290'-12"Ø DRAIN PIPE

PROP DMH
RIM EL=201.0
INV IN TO MEET EX 12"
12" INV IN EL=198.0
12" INV OUT EL=197.8

PROP VERT GC ISLAND

PROP CB
RIM EL=200.9
INV OUT EL=198.5

8'-12"Ø DRAIN PIPE

PAVED BERM AROUND CB

LIMITS OF PAVEMENT

WATER LINE FROM MAIN TO CURB STOP BY ACTON WATER DEPT; CONTRACTOR TO INSTALL WL FROM CURB STOP TO PLATFORM

PROP 1" PE WATER LINE

OVERLAY TO MEET EXIST PAVEMENT

EXIST RIGHT OF WAY

MILL & 2" OVERLAY RAILROAD STREET COMMUTER PARKING LOT

OVERLAY TO MEET EXIST PAVEMENT

LOCKED M.O.W ACCESS GATE

24'-12" CL V RCP

PROP CB W/BEEHIVE GRATE
STA 1327+70, 19.7' RT
RIM EL=198.25
INV IN=195.3
INV OUT=198.25

EXISTING RIGHT OF WAY

7 RAILROAD STREET

9 RAILROAD STREET

11 RAILROAD STREET

MATCH LINE STA. 1333+75 SEE SHEET C-12

PLAN

NOTES:

1. SEE SHEET G-3 FOR GENERAL NOTES

LEGEND:

- PROPOSED PROPERTY LINE
- RAILROAD R.O.W.
- WETLAND EDGE
- UD 12"Ø UNDER DRAIN (SUBDRAIN)
- 250 PROPOSED CONTOUR

SCALE IN FEET: 20 0 20 40

90% SUBMITTAL
NOT FOR CONSTRUCTION

FILE NAME: P:\MBTA\2008_E2X37800\CAD\700CADD\702STATIONS\South Acton\Civil\90% Design\ C-11 & C-12 Drainage and Grading Plan.dwg
PLOT DATE: Sep 06, 2011 - 5:19pm

ISSUE	DATE	DESCRIPTION	BY	CHKD.	APP.

JACOBS
343 CONGRESS STREET
BOSTON, MA 02110
(617) 242-9222

MASSACHUSETTS BAY TRANSPORTATION AUTHORITY

FITCHBURG COMMUTER RAIL LINE
IMPROVEMENT PROJECT
CONTRACT NO. G67CN01

SOUTH ACTON STATION
DRAINAGE AND GRADING PLAN–EAST END
SHEET 1 OF 2

HNTB
300 APOLLO DRIVE
CHELMSFORD, MA 01824
(978) 905-4000

PROJECT MANAGER Date

MASSACHUSETTS BAY TRANSPORTATION AUTHORITY

APPROVED BY:

PROJECT MANAGER Date

HORIZ: AS SHOWN	DES. BY	DR. BY	CHK. BY	PLAN NO.	ISSUE
VERT: NONE	JPB	KMB	JM		
DATE: 9/8/11				SHEET C-11	

EAST TO BOSTON

WEST TO FITCHBURG

TOWN OF ACTON

MAPLE STREET

MATCH LINE STA. 1334+00 SEE SHEET C-11

21 MAPLE STREET

41 MAPLE STREET

43 MAPLE STREET

WETLAND AREA

PROPOSED ℄ TRACK 2 & CONST. BASELINE (SEE TRACK PLANS FOR GEOMETRY)

PROPOSED ℄ TRACK 1

EXISTING RIGHT OF WAY

STAIRWAY AND ELEVATOR TO OVERHEAD PEDESTRIAN BRIDGE

AREA TO BE REGRADED AND LANDSCAPED (SEE ARCH DWGS)

TRENCH DRAIN AT ENTRANCE (TYP)

PEDESTRIAN BRIDGE OVER TRACKS

BEGIN UNDERDRAIN STA 1338+70, 6.5' LT

4.8% RAMP TO GRADE (SEE STRUCTURAL DWGS)

EXISTING RIGHT OF WAY

800' LONG, HIGH LEVEL SIDE PLATFORMS

TRENCH DRAIN AT ENTRANCE (TYP)

EXTEND TRACKSIDE FENCING 200 FT. FROM END OF PLATFORM WEST TOWARD MARTIN STREET END @ STA.1340+60

BEGIN UNDERDRAIN W/ CLEANOUT (TYP) STA 1338+70, 19.5' RT

EXISTING RIGHT OF WAY

REMOVE EXIST DMH AND EXTEND EXIST 15" DRAIN LINE TO NEW DMH

290'-12"ø DRAIN PIPE

PROP DMH
RIM EL= 201.75
INV IN=196.25 (12")
INV IN=196.65 (8")
INV OUT=196.0 (15")

EXISTING RIGHT OF WAY

50'-8"ø DRAIN PIPE INLET EL=197.50

PROP 1" PE WATER LINE TO METER PIT AND YARD HYDRANT

CONC SW LIMIT (MEET EXISTING)

WETLAND AREA

VERT GC

7.5% SLOPED COVERED RAMP TO PLATFORM

SLOPE PLAZA CONC 1"/FT.

STAIRS TO PLATFORM AND PEDESTRIAN BRIDGE

MAIN STATION ENTRANCE

ACCESSIBLE RAMP AT CURB

ACTON COMMUTER PARKING AREA

DROP OFF LANE FLUSH WITH EXISTING LOT

BIT CONC SW TO R.O.W.

M.O.W. STORAGE BOX

RELOCATED BICYCLE STORAGE

19 RAILROAD STREET

19 RAILROAD STREET

WETLAND AREA

PLAN

NOTES:

1. SEE SHEET G-3 FOR GENERAL NOTES

LEGEND:

- PROPOSED PROPERTY LINE
- RAILROAD R.O.W.
- WETLAND EDGE
- UD 12"ø UNDER DRAIN (SUBDRAIN)
- 250 PROPOSED CONTOUR

20 0 20 40

SCALE IN FEET

90% SUBMITTAL
NOT FOR CONSTRUCTION

FILE NAME: P:\MBTA\2008\E2X37800\CAD\700CADD\702STATIONS\South Acton\Civil\90% Design\ C-11 & C-12 Drainage and Grading Plan.dwg
PLOT DATE: Sep 06, 2011 - 5:20pm

MASSACHUSETTS BAY TRANSPORTATION AUTHORITY

FITCHBURG COMMUTER RAIL LINE IMPROVEMENT PROJECT
CONTRACT NO. G67CN01

SOUTH ACTON STATION
DRAINAGE AND GRADING PLAN-WEST END
SHEET 2 OF 2

ISSUE	DATE	DESCRIPTION	BY	CHKD.	APP.

JACOBS 343 CONGRESS STREET BOSTON, MA 02110 (617) 242-9222

HNTB 300 APOLLO DRIVE CHELMSFORD, MA 01824 (978) 905-4000

PROJECT MANAGER Date

MASSACHUSETTS BAY TRANSPORTATION AUTHORITY

APPROVED BY:

PROJECT MANAGER Date

HORIZ: AS SHOWN	DES. BY	DR. BY	CHK. BY	PLAN NO.	ISSUE
VERT: NONE	JPB	KMB	JM		
DATE: 9/8/11				SHEET C-12	

EAST TO BOSTON

WEST TO FITCHBURG

TOWN OF ACTON

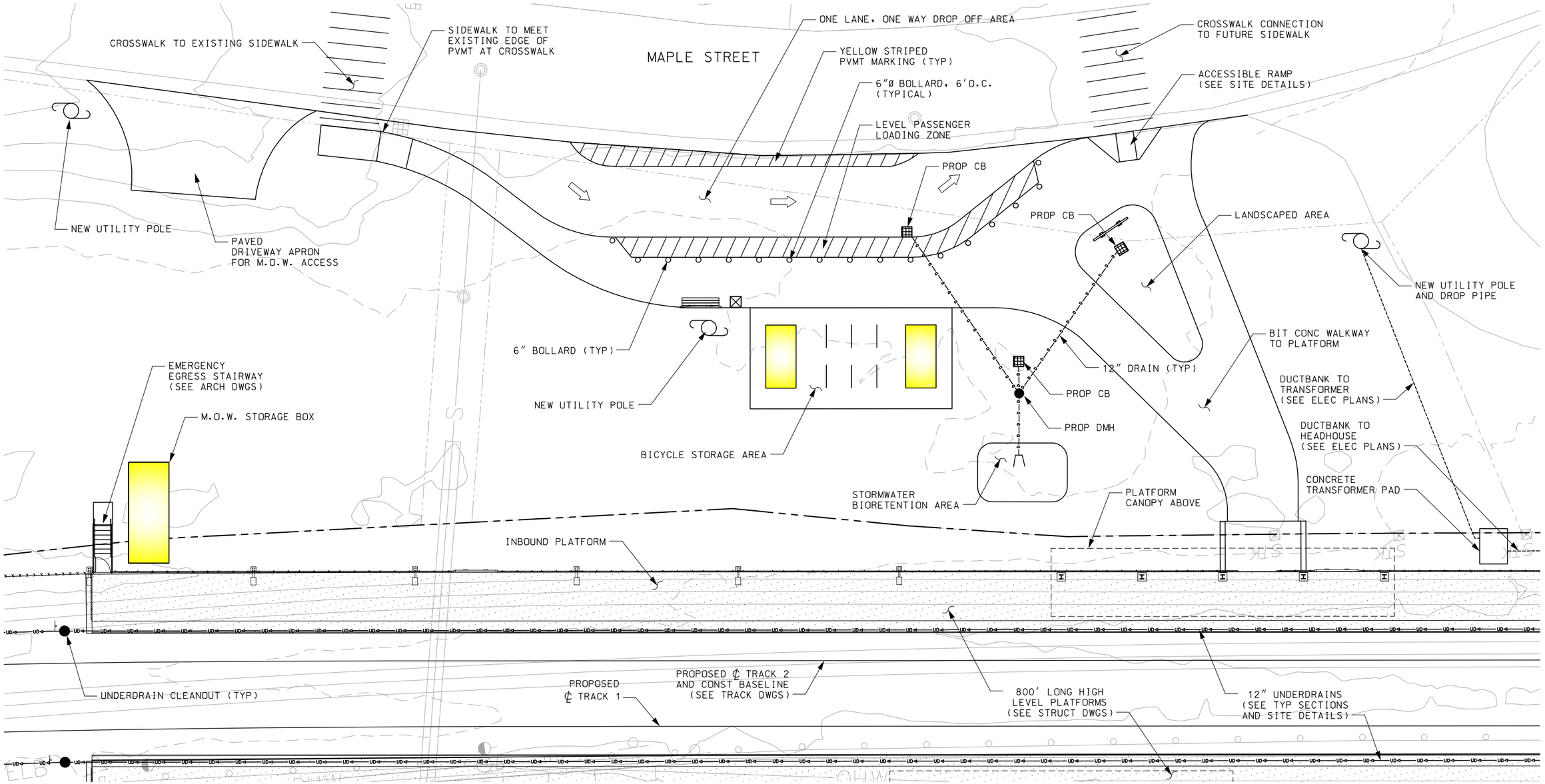

PLAN

NOTES:

1. SEE SHEET G-3 FOR GENERAL NOTES.

LEGEND:

PLATFORM, STAIRS AND ELEVATORS

10 0 10 20

SCALE IN FEET

90% SUBMITTAL
NOT FOR CONSTRUCTION

ISSUE	DATE	DESCRIPTION	BY	CHKD.	APP.

JACOBS
343 CONGRESS STREET
BOSTON, MA 02110
(617) 242-9222

HNTB
300 APOLLO DRIVE
CHELMSFORD, MA 01824
(978) 905-4000

PROJECT MANAGER Date

MASSACHUSETTS BAY TRANSPORTATION AUTHORITY

APPROVED BY:

PROJECT MANAGER Date

MASSACHUSETTS BAY TRANSPORTATION AUTHORITY

FITCHBURG COMMUTER RAIL LINE
IMPROVEMENT PROJECT
CONTRACT NO. G67CN01

SOUTH ACTON STATION
SITE PLAN DETAIL
MAPLE ST. DROP OFF

HORIZ: AS SHOWN	DES. BY	DR. BY	CHK. BY
VERT: NONE	JPB	KMB	JM
DATE: 9/8/11			

PLAN NO. C-13

ISSUE

FILE NAME: P:\MBTA 2008\E2X37800\CAD\700CADD\702STATIONS\South Acton\Civil\90% Design\ C-13 ~ C-15 Detailed Site Plans.dwg
PLOT DATE: Sep 06, 2011 - 5:28pm

EAST TO BOSTON

WEST TO FITCHBURG

TOWN OF ACTON

UNDERDRAIN CLEANOUT (TYP)

PROPOSED ℄ TRACK 1

PROPOSED ℄ TRACK 2 AND CONST BASELINE (SEE TRACK DWGS)

800' LONG HIGH LEVEL PLATFORMS (SEE STRUCT DWGS)

12" UNDERDRAINS (SEE TYP SECTIONS AND SITE DETAILS)

CANOPY ABOVE

WATER LINE CONNECTION

SLOPED RAMP TO PLATFORM

GUARD RAIL

PROP CB

NEW 12" DRAIN LINE

PLATFORM GATE TO EMERGENCY EGRESS STAIRWAY (SEE ARCH DWGS)

MILL & PAVE RAILROAD STREET COMMUTER PARKING LOT (26 SPACES)

TWO (2) ACCESSIBLE PARKING SPACES

PROPOSED DMH

EXISTING UTILITY POLE TO REMAIN

BIKE RACKS

RAILROAD STREET

LIMITS OF PAVEMENT

RELOCATE GUY WIRE AS NEC

SMH
RIM 201.59
INV 184.24

LIMIT OF NEW PAVEMENT

RAILROAD STREET

PLAN

NOTES:

1. SEE SHEET G-3 FOR GENERAL NOTES.

LEGEND:

PLATFORM, STAIRS AND ELEVATORS

10 0 10 20

SCALE IN FEET

90% SUBMITTAL
NOT FOR CONSTRUCTION

ISSUE	DATE	DESCRIPTION	BY	CHKD.	APP.

JACOBS
343 CONGRESS STREET
BOSTON, MA 02110
(617) 242-9222

MASSACHUSETTS BAY TRANSPORTATION AUTHORITY

FITCHBURG COMMUTER RAIL LINE
IMPROVEMENT PROJECT
CONTRACT NO. G67CN01

SOUTH ACTON STATION
SITE PLAN DETAIL
RAILROAD ST. ENTRANCE

HNTB
300 APOLLO DRIVE
CHELMSFORD, MA 01824
(978) 905-4000

PROJECT MANAGER Date

MASSACHUSETTS BAY TRANSPORTATION AUTHORITY

APPROVED BY:

PROJECT MANAGER Date

HORIZ: AS SHOWN	DES. BY	DR. BY	CHK. BY	PLAN NO.	ISSUE
VERT: NONE	JPB	KMB	JM		
DATE: 9/8/11				SHEET C-14	

FILE NAME: P:\MBTA\2008\E22X37800\CAD\700CADD\702STATIONS\South Acton\Civil\90% Design\ C-13 ~ C-15 Detailed Site Plans.dwg
PLOT DATE: Sep. 06, 2011 - 5:29pm

EAST TO BOSTON

WEST TO FITCHBURG

TOWN OF ACTON

WATER METER AND YARD HYDRANT

FOR HEADHOUSE DETAILS SEE STRUCT AND ARCH DWGS

WETLAND BOUNDARY

STAIRS TO OH PED BRIDGE (SEE ARCH DWGS)

ELEVATOR TO OH PED BRIDGE (SEE ARCH DWGS)

RIGHT OF WAY

PLATFORM CANOPY ABOVE

EGRESS RAMP (SEE STRUCT DWGS)

PROPOSED ℄ TRACK 1

PROPOSED ℄ TRACK 2 AND CONST BASELINE (SEE TRACK DWGS)

TRENCH DRAINS AT ENTRANCES (SEE SITE DETAILS)

800' LONG HIGH LEVEL PLATFORMS (SEE STRUCT DWGS)

12" UNDERDRAINS (SEE TYP SECTIONS AND SITE DETAILS)

RELOCATED EX BICYCLE STORAGE UNITS

LOAM & SEED

CONC SW/PLAZA AREA (SEE SITE DETAILS)

BIKE RACKS (TYP)

DROP OFF LANE TO REMAIN

WATER METER AND YARD HYDRANTS

TRENCH DRAINS AT ENTRANCES (SEE SITE DETAILS)

OUTBOUND HEADHOUSE (SEE ARCH. DRAWINGS)

ACCESSIBLE RAMP (SEE SITE DETAILS)

12' W CROSSWALK

ACCESSIBLE PATH OF TRAVEL

BOLLARD (TYP)

TRENCH DRAINS AT ENTRANCES (SEE SITE DETAILS)

FOR HEADHOUSE DETAILS SEE STRUCT AND ARCH DWGS

REMOVE AND RESET EXIST VERT GRAN CURB

BIKE RACKS (TYP)

REMOVE 60' OF EX VERT GRAN CURB TO CONSTRUCT LEVEL PASSENGER LOADING ZONE

REMOVE EX BICYCLE RACKS AND REPLACE W/ EX BICYCLE STORAGE UNITS

BIKE RACKS (TYP)

M.O.W. STORAGE BOX

PLAN

NOTES:

1. SEE SHEET G-3 FOR GENERAL NOTES.
2. FOR HEADHOUSE PLANS AND DETAILS SEE ARCHITECTURAL AND STRUCTURAL DRAWINGS.

LEGEND:

PLATFORM, STAIRS AND ELEVATORS

10 0 10 20

SCALE IN FEET

90% SUBMITTAL
NOT FOR CONSTRUCTION

ISSUE	DATE	DESCRIPTION	BY	CHKD.	APP.

JACOBS 343 CONGRESS STREET BOSTON, MA 02110 (617) 242-9222

MASSACHUSETTS BAY TRANSPORTATION AUTHORITY

FITCHBURG COMMUTER RAIL LINE IMPROVEMENT PROJECT CONTRACT NO. G67CN01

SOUTH ACTON STATION SITE PLAN DETAIL CENTRAL STREET DROP OFF

HNTB 300 APOLLO DRIVE CHELMSFORD, MA 01824 (978) 905-4000

MASSACHUSETTS BAY TRANSPORTATION AUTHORITY

APPROVED BY:

PROJECT MANAGER Date

PROJECT MANAGER Date

HORIZ: AS SHOWN	DES. BY	DR. BY	CHK. BY
VERT: NONE	JPB	KMB	JM
DATE: 9/8/11			

PLAN NO. C-15 ISSUE

SHEET C-15

FILE NAME: P:\MBTA\2008\E2X37800\CAD\700CADD\702STATIONS\South Acton\Civil\90% Design\ C-13 ~ C-15 Detailed Site Plans.dwg
PLOT DATE: Sep 06, 2011 - 5:30pm

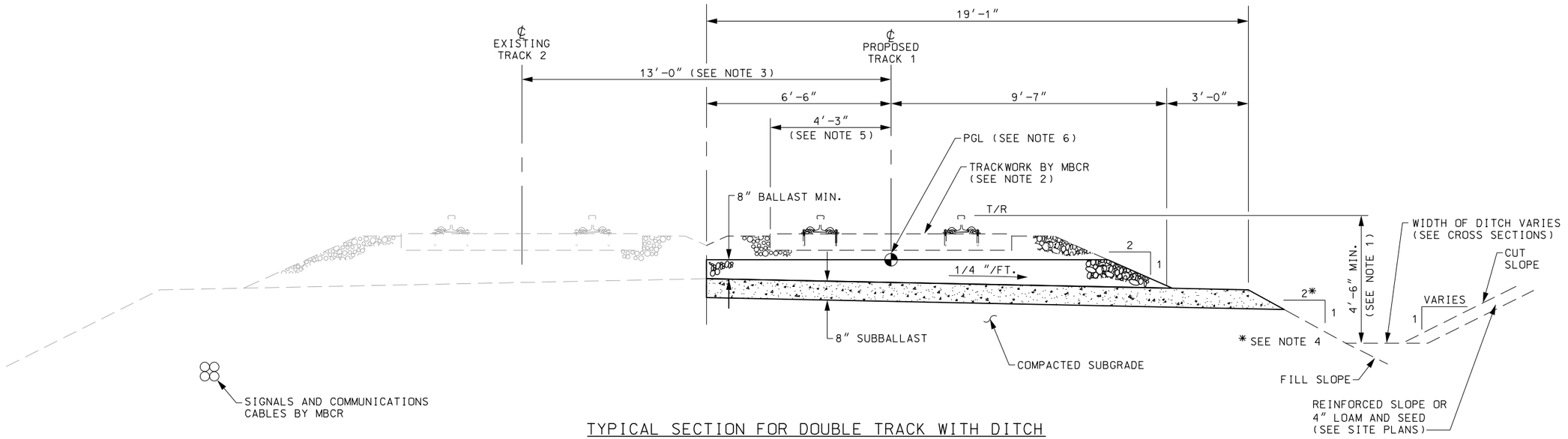

TYPICAL SECTION FOR DOUBLE TRACK WITH DITCH

APPROXIMATE LIMITS: STA. 1338+70 TO 1341+00

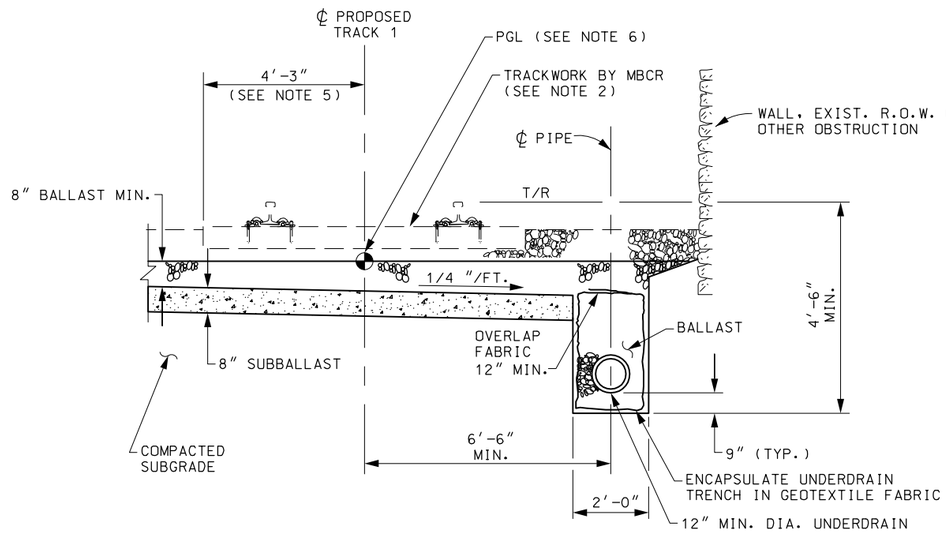

TYPICAL SECTION WITH UNDERDRAIN

APPROXIMATE LIMITS: STA. 1327+70 TO STA. 1330+60

HORIZ. 2 0 2 4

VERT. 2 0 2 4

(SCALE IN FEET)

NOTES:

1. AT LOCATIONS WHERE SUFFICIENT SIDE DITCH IS NOT POSSIBLE AND WHERE INDICATED ON THE PLANS, USE PERFORATED PIPE UNDERDRAIN (12″ MIN. DIA.).
2. TRACK WORK INCLUDING FINAL BALLAST LAYER TO BE PERFORMED BY MBCR FORCE ACCOUNT; COORDINATE WITH MBCR.
3. 13′-0″ TRACK CENTERS SHOWN. ACTUAL TRACK CENTERS VARY. (SEE TRACK GEOMETRY DATA SHEETS FOR MORE INFORMATION.)
4. USE TYPICAL DIMENSIONS AND 2:1 SLOPES WHEN EXISTING CONDITIONS ALLOW UNLESS OTHERWISE INDICATED. REFER TO CROSS-SECTIONS FOR SPECIFIC DETAILS.
5. 8″ MIN. BALLAST DEPTH SHALL BE MEASURED 4′-3″ FROM ℄ OF TRACK 1 TOWARD THE TRACK 2 SIDE.
6. PROPOSED GRADE LINE (PGL) IS DEFINED BY THE TRACK 1 PROFILES SHOWN ON SHEETS T-76 THRU T-84 LESS 19″ (1′-7″). WORK ABOVE THE PGL WILL BE INSTALLED BY MBCR AND INCLUDES THE FINAL BALLAST LAYER, TRACK TIES, RAIL AND OTM.
7. SEE MBTA RAILROAD OPERATIONS BOOK OF STANDARD PLANS, DRAWING NO. 1018 AND 1019 FOR CLEARANCE REQUIREMENTS ALONG CURVED TRACK AND PLATFORMS.

90% SUBMITTAL
NOT FOR CONSTRUCTION

MASSACHUSETTS BAY TRANSPORTATION AUTHORITY

FITCHBURG COMMUTER RAIL LINE IMPROVEMENT PROJECT
CONTRACT NO. G67CN01

SOUTH ACTON STATION
TYPICAL SECTIONS – TRACK BED
SHEET 1 OF 2

ISSUE	DATE	DESCRIPTION	BY	CHKD.	APP.

HNTB 300 APOLLO DRIVE CHELMSFORD, MA 01824 (978) 905-4000

PROJECT MANAGER Date

MASSACHUSETTS BAY TRANSPORTATION AUTHORITY

APPROVED BY:

PROJECT MANAGER Date

JACOBS 343 CONGRESS STREET BOSTON, MA 02110 (617) 242-9222

	DES. BY	DR. BY	CHK. BY
HORIZ: AS SHOWN	JPB	KMB	JM
VERT: AS SHOWN			
DATE: 9/8/11			

PLAN NO.

SHEET C-16

ISSUE

FILE NAME: P:\MBTA\2008\E2X37800\CAD\700CADD\702STATIONS\South Acton\Civil\90% Design\ C-16 & C-17 Typical Sections.dwg
PLOT DATE: Sep 06, 2011 – 5:37pm

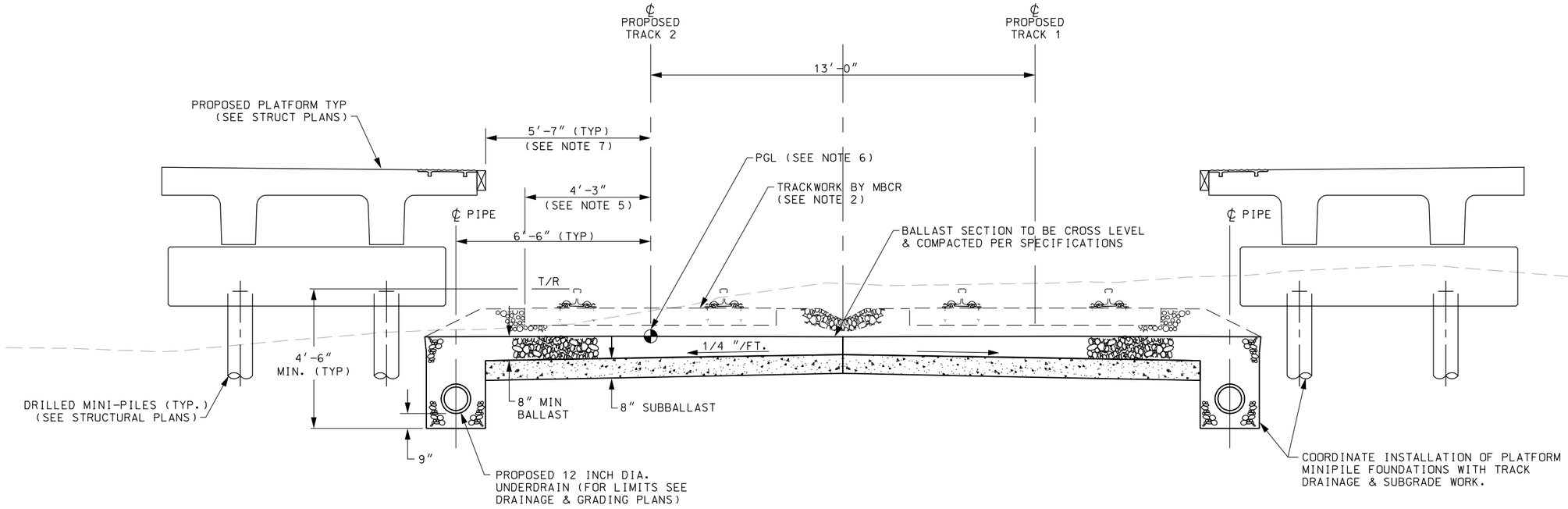

TYPICAL SECTION ALONG PLATFORM

APPROXIMATE LIMITS: STA. 1330+60 TO STA. 1338+60

NOTE:

1. REFER TO TYPICAL SECTIONS SHEET 1 OF 2 FOR NOTES.

90% SUBMITTAL
NOT FOR CONSTRUCTION

HORIZ. 2 0 2 4
VERT. 2 0 2 4
(SCALE IN FEET)

ISSUE	DATE	DESCRIPTION	BY	CHKD.	APP.

PROJECT MANAGER Date

JACOBS
343 CONGRESS STREET
BOSTON, MA 02110
(617) 242-9222

HNTB
300 APOLLO DRIVE
CHELMSFORD, MA 01824
(978) 905-4000

PROJECT MANAGER Date

MASSACHUSETTS BAY TRANSPORTATION AUTHORITY

APPROVED BY:

PROJECT MANAGER Date

MASSACHUSETTS BAY TRANSPORTATION AUTHORITY

FITCHBURG COMMUTER RAIL LINE
IMPROVEMENT PROJECT
CONTRACT NO. G67CN01

SOUTH ACTON STATION
TYPICAL SECTIONS – TRACK BED
SHEET 2 OF 2

HORIZ: AS SHOWN	DES. BY	DR. BY	CHK. BY	PLAN NO.	ISSUE
VERT: AS SHOWN	JPB	KMB	JM		
DATE: 9/8/11				SHEET C-17	

FILE NAME: P:\MBTA\2008\E2X37800\CAD\700CADD\702STATIONS\South Acton\Civil\90% Design\ C-16 & C-17 Typical Sections.dwg
PLOT DATE: Sep 06, 2011 - 5:41pm

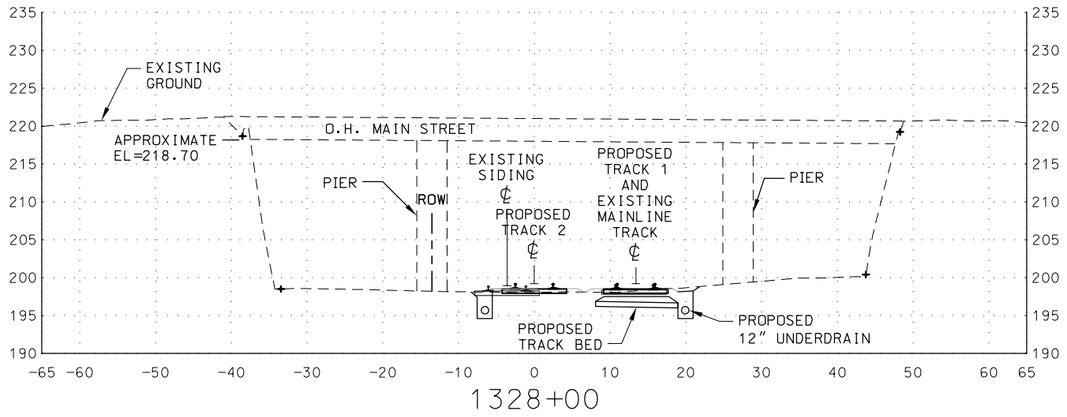

1328+00

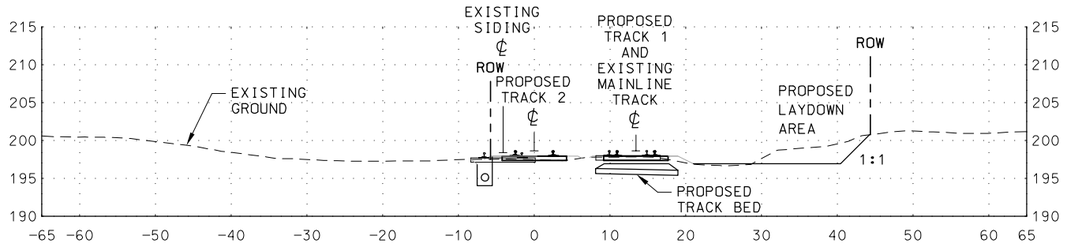

1327+00

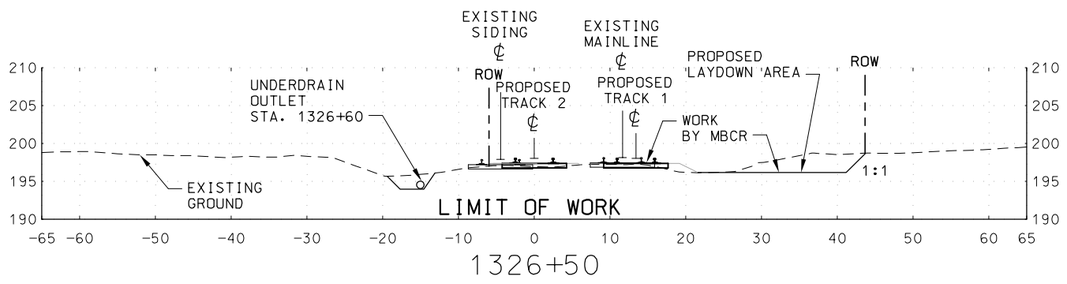

1326+50

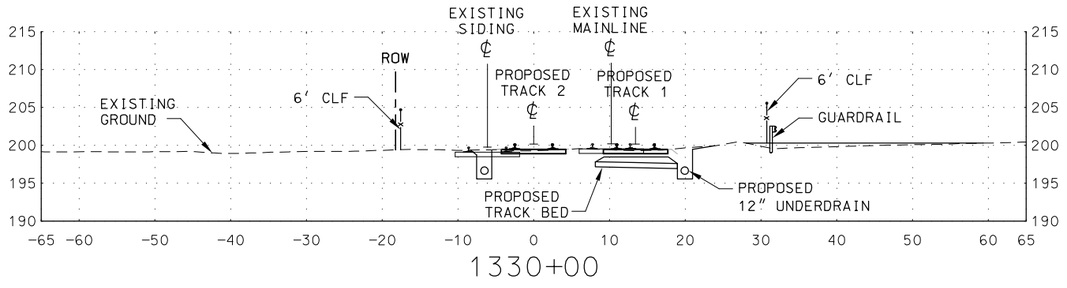

1330+00

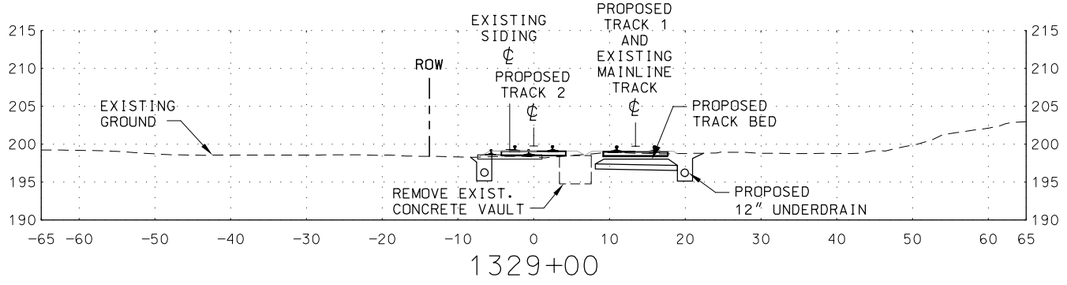

1329+00

LEGEND:

- PROPOSED PROPERTY LINE
- RAILROAD R.O.W.
- WETLAND EDGE

CROSS SECTIONS

NOTES:

1. SEE DEMOLITION PLANS FOR LIMITS OF CLEARING AND GRUBBING.
2. CONTRACTOR IS RESPONSIBLE FOR SUBBALLAST AND INITIAL BALLAST LAYER PER THE TYPICAL TRACK SECTIONS. TRACK WORK, TO INCLUDE RAILS, TIES AND OTM, AND FINAL BALLAST LAYER WILL BE INSTALLED BY MBCR.

90% SUBMITTAL
NOT FOR CONSTRUCTION

HORIZ. / VERT. 10 0 10 20 (SCALE IN FEET)

ISSUE	DATE	DESCRIPTION	BY	CHKD.	APP.

JACOBS 343 CONGRESS STREET BOSTON, MA 02110 (617) 242-9222

MASSACHUSETTS BAY TRANSPORTATION AUTHORITY

FITCHBURG COMMUTER RAIL LINE IMPROVEMENT PROJECT
CONTRACT NO. G67CN01

SOUTH ACTON STATION
CROSS SECTIONS
STA. 1326+50 TO 1330+00

HNTB 300 APOLLO DRIVE CHELMSFORD, MA 01824 (978) 905-4000

PROJECT MANAGER Date

MASSACHUSETTS BAY TRANSPORTATION AUTHORITY
APPROVED BY:
PROJECT MANAGER Date

HORIZ: AS SHOWN	DES. BY	DR. BY	CHK. BY	PLAN NO.	ISSUE
VERT: AS SHOWN	JPB	CWB	JM		
DATE: 9/8/11				SHEET C-20	

FILE NAME: P:\MBTA\2008\E2X37800\CAD\700CADD\702STATIONS\South Acton\Civil\90% Design\ C-20 thru C-28 Cross Sections.dwg
PLOT DATE: Sep 01, 2011 - 2:4 pm

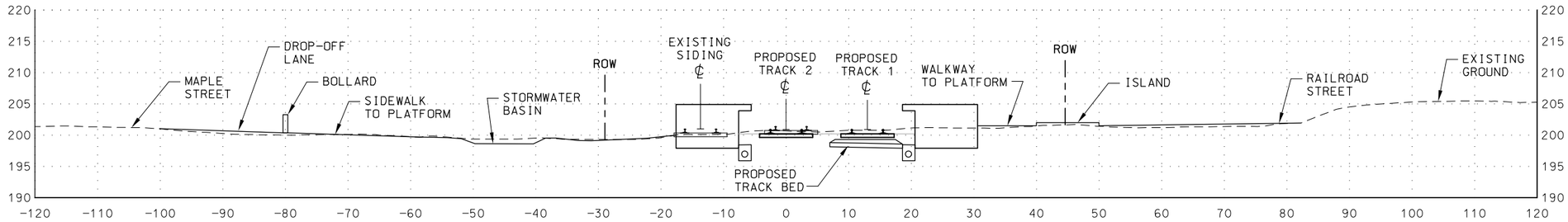

1332+00

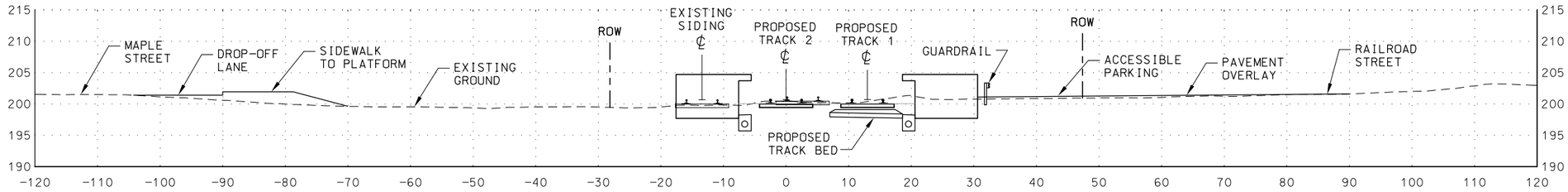

1331+50

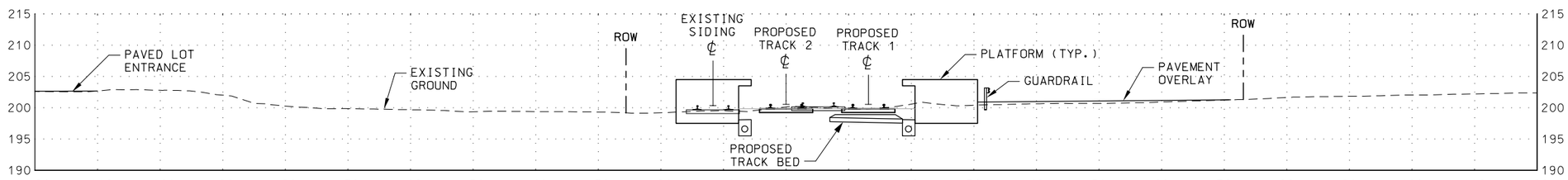

1331+00

LEGEND:

- PROPOSED PROPERTY LINE
- RAILROAD R.O.W.
- WETLAND EDGE

90% SUBMITTAL
NOT FOR CONSTRUCTION

CROSS SECTIONS

NOTES:

1. SEE DEMOLITION PLANS FOR LIMITS OF CLEARING AND GRUBBING.
2. CONTRACTOR IS RESPONSIBLE FOR SUBBALLAST AND INITIAL BALLAST LAYER PER THE TYPICAL TRACK SECTIONS. TRACK WORK, TO INCLUDE RAILS, TIES AND OTM, AND FINAL BALLAST LAYER WILL BE INSTALLED BY MBCR.

HORIZ. VERT. 10 0 10 20 (SCALE IN FEET)

ISSUE	DATE	DESCRIPTION	BY	CHKD.	APP.

JACOBS 343 CONGRESS STREET BOSTON, MA 02110 (617) 242-9222

MASSACHUSETTS BAY TRANSPORTATION AUTHORITY

FITCHBURG COMMUTER RAIL LINE IMPROVEMENT PROJECT CONTRACT NO. G67CN01

SOUTH ACTON STATION
CROSS SECTIONS
STA. 1331+00 TO 1332+00

HNTB 300 APOLLO DRIVE CHELMSFORD, MA 01824 (978) 905-4000

PROJECT MANAGER Date

MASSACHUSETTS BAY TRANSPORTATION AUTHORITY
APPROVED BY:
PROJECT MANAGER Date

HORIZ: AS SHOWN	DES. BY	DR. BY	CHK. BY	PLAN NO.	ISSUE
VERT: AS SHOWN	JPB	CWB	JM		
DATE: 9/8/11				SHEET C-21	

FILE NAME: P:\MBTA\2008\E2X37800\CAD\700CADD\702STATIONS\South Acton\Civil\90% Design\ C-20 thru C-28 Cross Sections.dwg
PLOT DATE: Sep 06, 2011 - 5:45pm

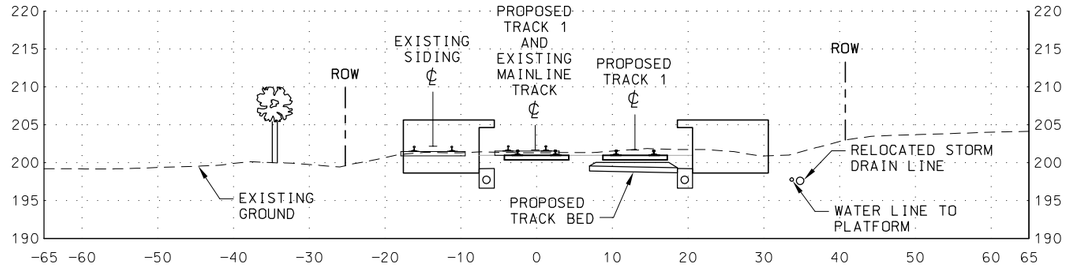

1334+00

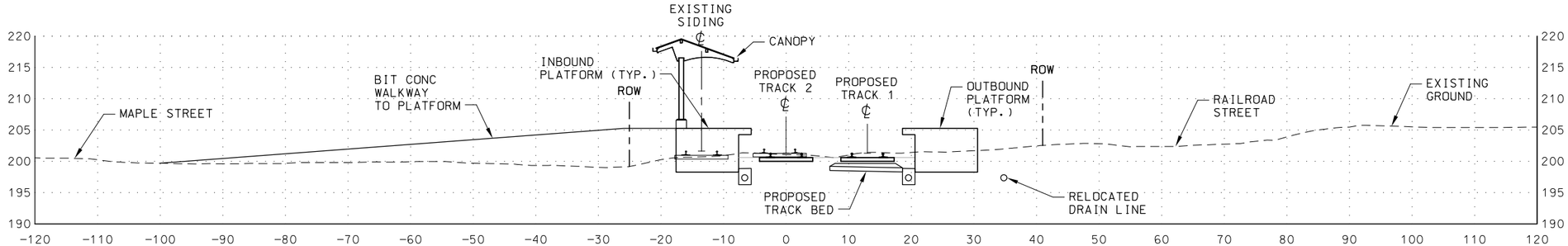

1333+00

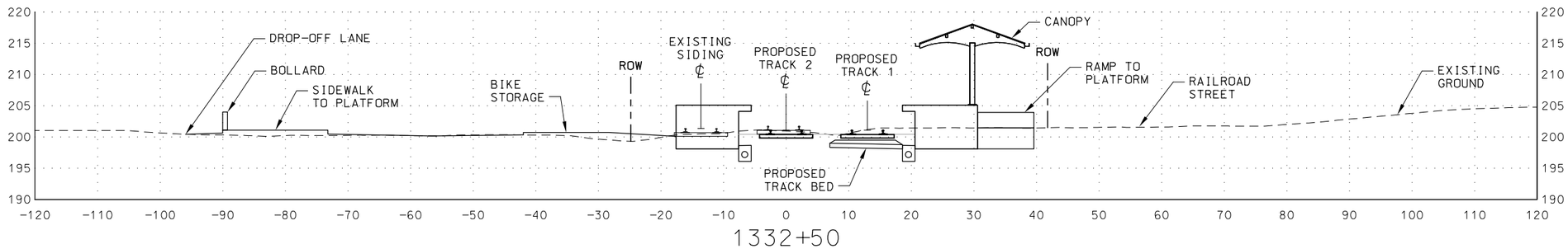

1332+50

LEGEND:

- PROPOSED PROPERTY LINE
- RAILROAD R.O.W.
- WETLAND EDGE

CROSS SECTIONS

NOTES:

1. SEE DEMOLITION PLANS FOR LIMITS OF CLEARING AND GRUBBING.
2. CONTRACTOR IS RESPONSIBLE FOR SUBBALLAST AND INITIAL BALLAST LAYER PER THE TYPICAL TRACK SECTIONS. TRACK WORK, TO INCLUDE RAILS, TIES AND OTM, AND FINAL BALLAST LAYER WILL BE INSTALLED BY MBCR.

HORIZ. 10 0 10 20
VERT. 10 0 10 20
(SCALE IN FEET)

90% SUBMITTAL
NOT FOR CONSTRUCTION

FILE NAME: P:\MBTA\2008\E2X37800\CAD\700CADD\702STATIONS\South Acton\Civil\90% Design\ C-20 thru C-28 Cross Sections.dwg
PLOT DATE: Sep 01, 2011 - 3:29pm

ISSUE	DATE	DESCRIPTION	BY	CHKD.	APP.

JACOBS 343 CONGRESS STREET BOSTON, MA 02110 (617) 242-9222

MASSACHUSETTS BAY TRANSPORTATION AUTHORITY

FITCHBURG COMMUTER RAIL LINE IMPROVEMENT PROJECT CONTRACT NO. G67CN01

SOUTH ACTON STATION
CROSS SECTIONS
STA. 1332+50 TO 1334+00

HNTB 300 APOLLO DRIVE CHELMSFORD, MA 01824 (978) 905-4000

PROJECT MANAGER Date

MASSACHUSETTS BAY TRANSPORTATION AUTHORITY
APPROVED BY:
PROJECT MANAGER Date

HORIZ: AS SHOWN	DES. BY	DR. BY	CHK. BY	PLAN NO.	ISSUE
VERT: AS SHOWN	JPB	CWB	JM		
DATE: 9/8/11				SHEET C-22	

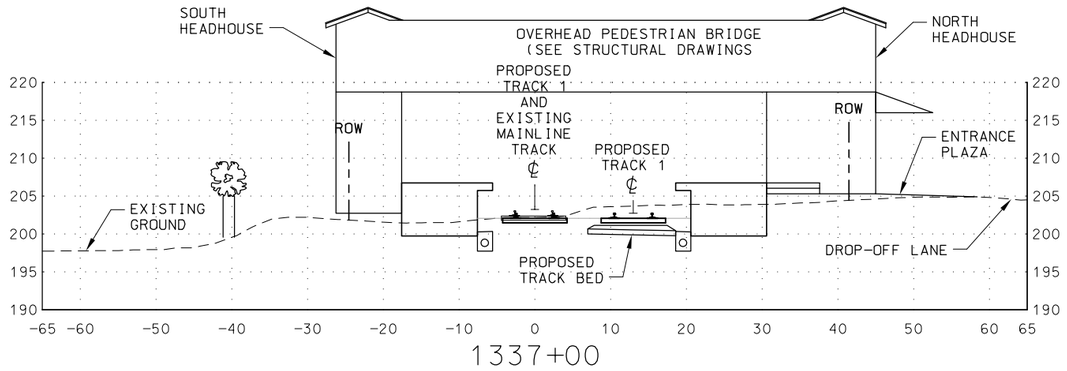

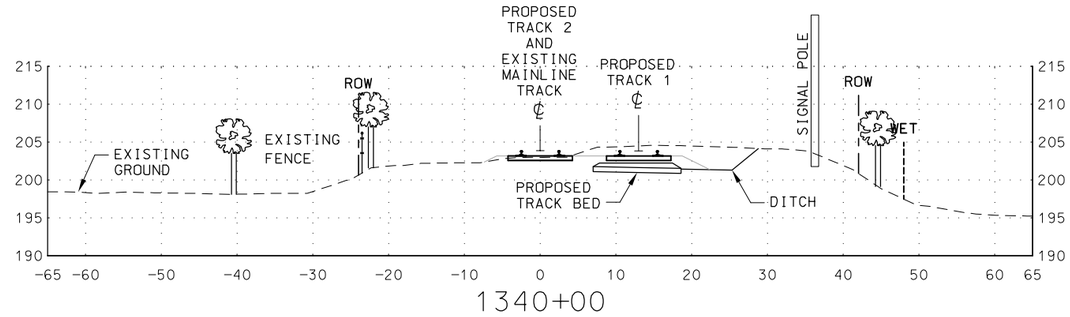

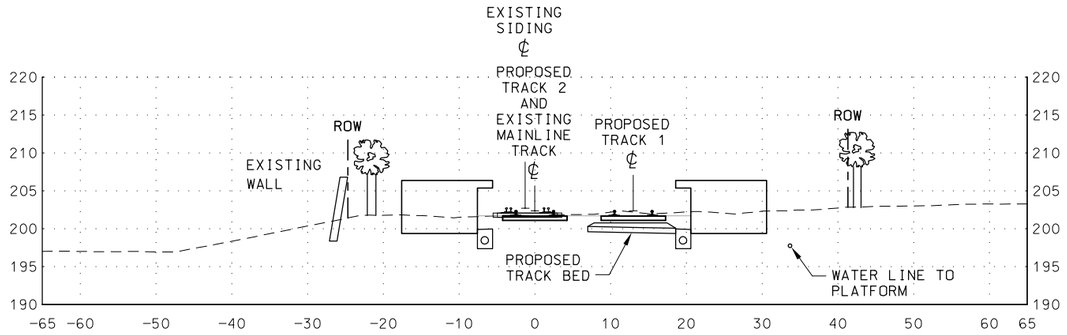

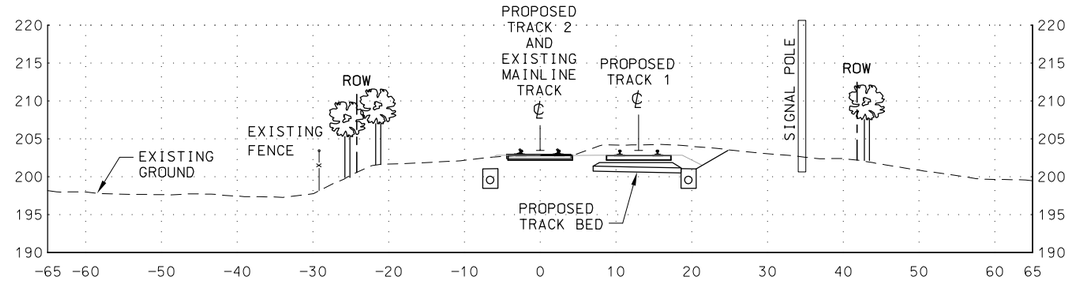

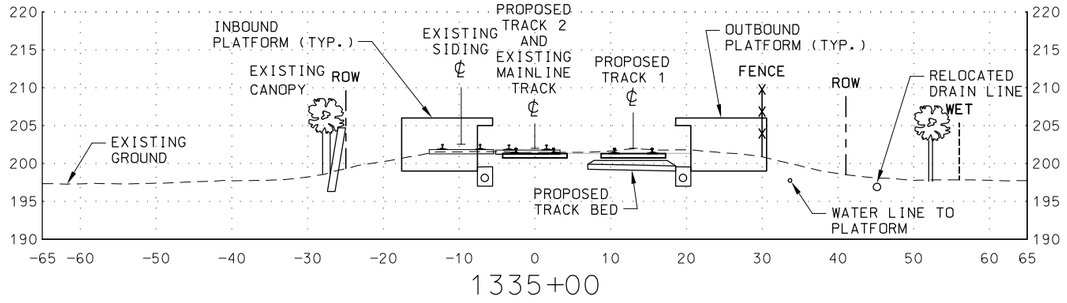

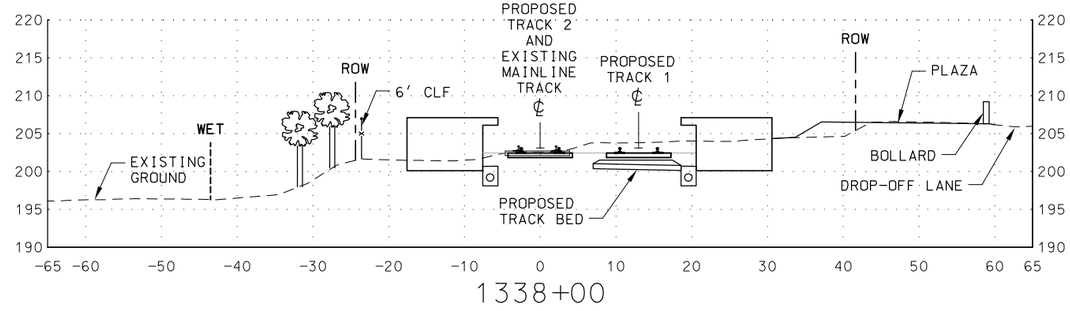

LEGEND:

- PROPOSED PROPERTY LINE
- RAILROAD R.O.W.
- WETLAND EDGE

NOTES:

1. SEE DEMOLITION PLANS FOR LIMITS OF CLEARING AND GRUBBING.
2. CONTRACTOR IS RESPONSIBLE FOR SUBBALLAST AND INITIAL BALLAST LAYER PER THE TYPICAL TRACK SECTIONS. TRACK WORK, TO INCLUDE RAILS, TIES AND OTM, AND FINAL BALLAST LAYER WILL BE INSTALLED BY MBCR.

CROSS SECTIONS

HORIZ. 10 0 10 20
VERT. 10 0 10 20
(SCALE IN FEET)

90% SUBMITTAL
NOT FOR CONSTRUCTION

ISSUE	DATE	DESCRIPTION	BY	CHKD.	APP.

JACOBS 343 CONGRESS STREET BOSTON, MA 02110 (617) 242-9222

MASSACHUSETTS BAY TRANSPORTATION AUTHORITY

FITCHBURG COMMUTER RAIL LINE IMPROVEMENT PROJECT
CONTRACT NO. G67CN01

SOUTH ACTON STATION
CROSS SECTIONS
STA. 1335+00 TO 1340+00

HNTB 300 APOLLO DRIVE CHELMSFORD, MA 01824 (978) 905-4000

PROJECT MANAGER Date

MASSACHUSETTS BAY TRANSPORTATION AUTHORITY
APPROVED BY:
PROJECT MANAGER Date

HORIZ: AS SHOWN	DES. BY	DR. BY	CHK. BY	PLAN NO.	ISSUE
VERT: AS SHOWN	JPB	CWB	JM		
DATE: 9/8/11				SHEET C-23	

FILE NAME: P:\MBTA\2008\E2X37800\CAD\700CADD\702STATIONS\South Acton\Civil\90% Design\ C-20 thru C-28 Cross Sections.dwg
PLOT DATE: Sep 01, 2011 - 3:34pm

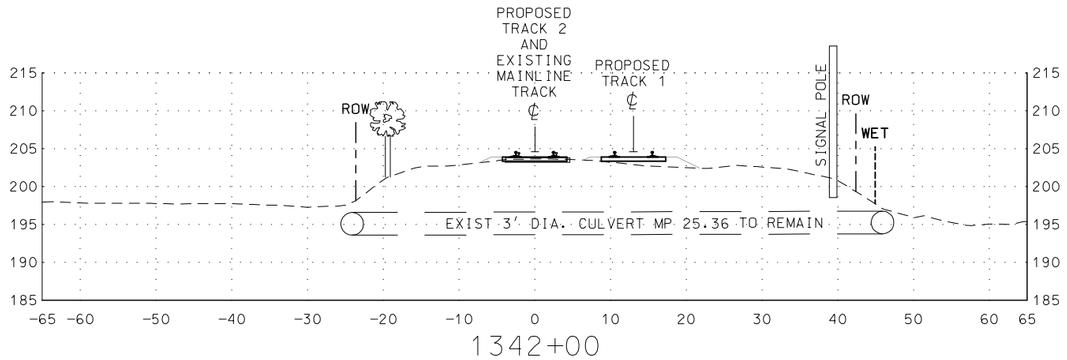

1342+00

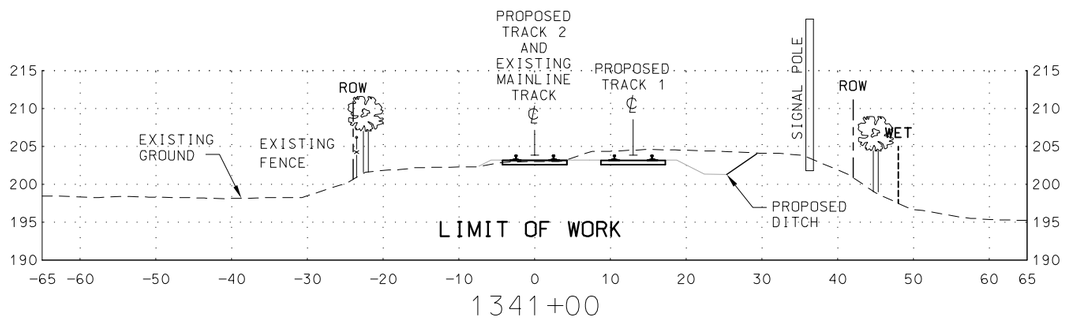

1341+00

CROSS SECTIONS

LEGEND:

- PROPOSED PROPERTY LINE
- RAILROAD R.O.W.
- WETLAND EDGE

NOTES:

1. SEE DEMOLITION PLANS FOR LIMITS OF CLEARING AND GRUBBING.
2. CONTRACTOR IS RESPONSIBLE FOR SUBBALLAST AND INITIAL BALLAST LAYER PER THE TYPICAL TRACK SECTIONS. TRACK WORK, TO INCLUDE RAILS, TIES AND OTM, AND FINAL BALLAST LAYER WILL BE INSTALLED BY MBCR.

90% SUBMITTAL
NOT FOR CONSTRUCTION

HORIZ. 10 0 10 20
VERT. 10 0 10 20
(SCALE IN FEET)

ISSUE	DATE	DESCRIPTION	BY	CHKD.	APP.

JACOBS
343 CONGRESS STREET
BOSTON, MA 02110
(617) 242-9222

HNTB
300 APOLLO DRIVE
CHELMSFORD, MA 01824
(978) 905-4000

PROJECT MANAGER Date

MASSACHUSETTS BAY TRANSPORTATION AUTHORITY

APPROVED BY:

PROJECT MANAGER Date

MASSACHUSETTS BAY TRANSPORTATION AUTHORITY

FITCHBURG COMMUTER RAIL LINE
IMPROVEMENT PROJECT
CONTRACT NO. G67CN01

SOUTH ACTON STATION
CROSS SECTIONS
STA. 1341+00 TO 1342+00

HORIZ: AS SHOWN	DES. BY	DR. BY	CHK. BY	PLAN NO.	ISSUE
VERT: AS SHOWN	JPB	CWB	JM		
DATE: 9/8/11				SHEET C-24	

FILE NAME: P:\MBTA\2008\E2X37800\CAD\700CADD\702STATIONS\South Acton\Civil\90% Design\ C-20 thru C-28 Cross Sections.dwg
PLOT DATE: Aug 05, 2011 - 1:08pm

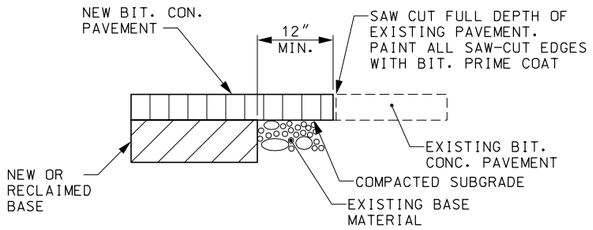

PAVEMENT BUTT JOINT DETAIL

N.T.S.

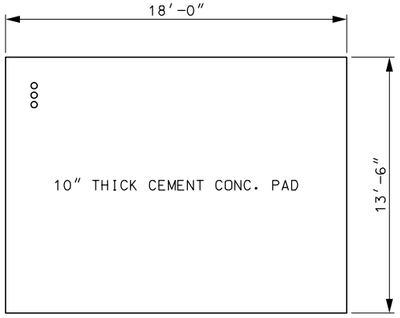

PLAN

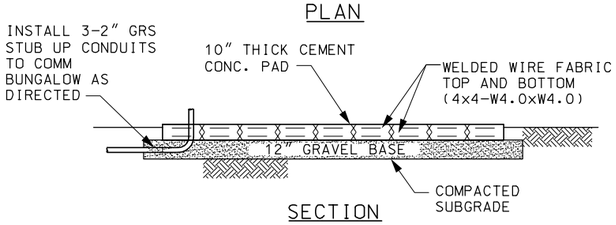

SECTION

CONCRETE PAD FOR FUTURE FARE VENDING MACHINE (FVM)

N.T.S.

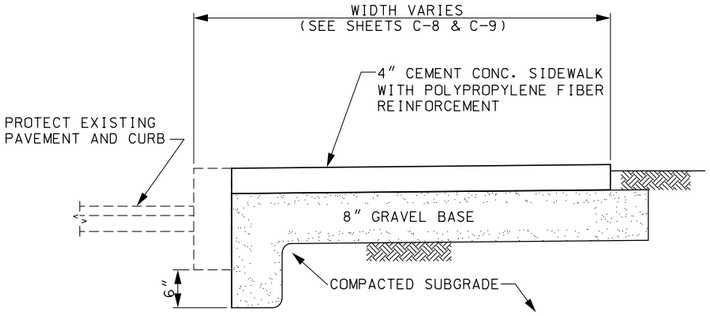

CONCRETE SIDEWALK AND DROP OFF AREA DETAIL

N.T.S.

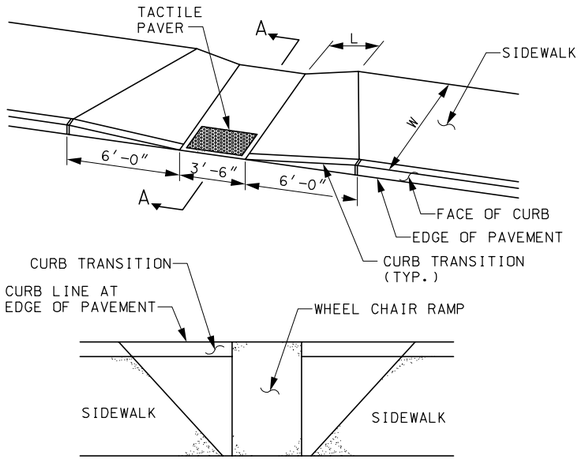

PLAN

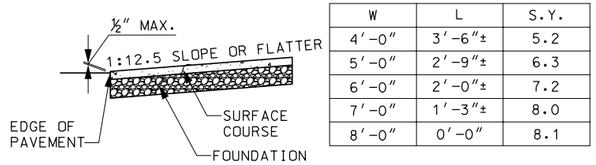

SECTION A-A

W	L	S.Y.
4'-0"	3'-6"±	5.2
5'-0"	2'-9"±	6.3
6'-0"	2'-0"±	7.2
7'-0"	1'-3"±	8.0
8'-0"	0'-0"	8.1

NOTE:
ALL RAMPS TO BE CONSTRUCTED PER THE LATEST AMERICANS WITH DISABILITIES ACT REQUIREMENTS

ACCESSIBLE RAMP DETAIL

N.T.S.

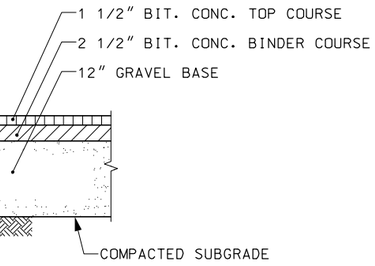

FULL DEPTH PAVEMENT DETAIL FOR PARKING LOTS AND WALKWAYS

N.T.S.

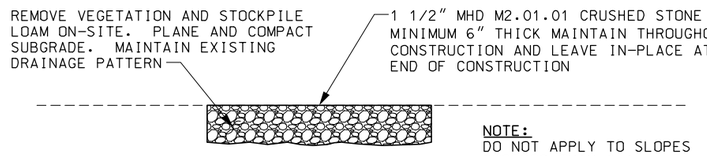

NOTE:
DO NOT APPLY TO SLOPES STEEPER THAN 6:1.

CRUSHED STONE MAT

N.T.S.

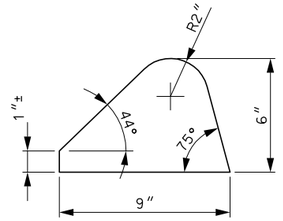

BITUMINOUS CONCRETE CURB - TYPE 2

N.T.S.

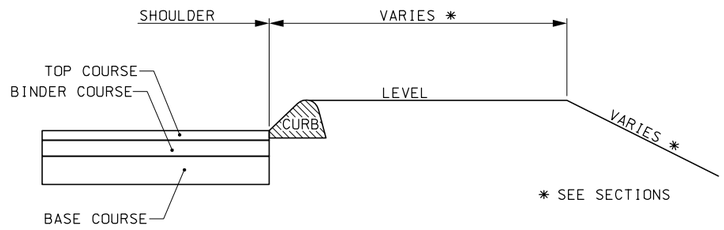

METHOD OF SETTING CURB

N.T.S.

90% SUBMITTAL
NOT FOR CONSTRUCTION

ISSUE	DATE	DESCRIPTION	BY	CHKD.	APP.

PROJECT MANAGER Date

JACOBS 343 CONGRESS STREET BOSTON, MA 02110 (617) 242-9222

HNTB 300 APOLLO DRIVE CHELMSFORD, MA 01824 (978) 905-4000

MASSACHUSETTS BAY TRANSPORTATION AUTHORITY

APPROVED BY:

PROJECT MANAGER Date

MASSACHUSETTS BAY TRANSPORTATION AUTHORITY

FITCHBURG COMMUTER RAIL LINE IMPROVEMENT PROJECT CONTRACT NO. G67CN01

SOUTH ACTON STATION SITE DETAILS SHEET 1 OF 4

HORIZ: N/A	DES. BY	DR. BY	CHK. BY	PLAN NO.	ISSUE
VERT: NONE	JGA	CWB	JM		
DATE: 9/8/11				SHEET C-40	

FILE NAME: P:\MBTA\2008\E2X37800\CAD\700CADD\702STATIONS\South Acton\Civil\90% Design\ C-40 Site Details Sheet 1 of 4.dwg
PLOT DATE: Aug 05, 2011 - 4:58pm

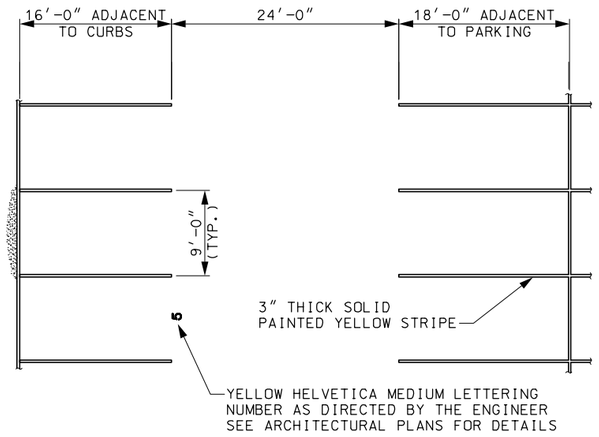

TYPICAL PARKING DETAIL

N.T.S.

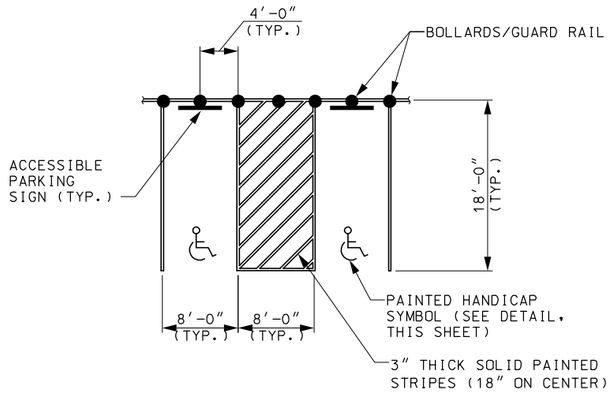

TYPICAL HANDICAP
VAN PARKING STALL DETAIL

N.T.S.

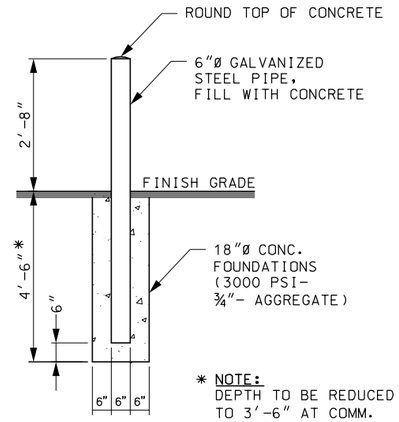

BOLLARD DETAIL

N.T.S.

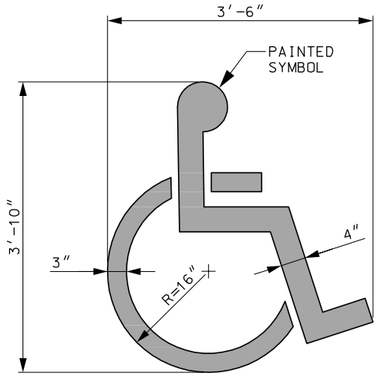

PAINTED ACCESSIBLE
SYMBOL DETAIL

N.T.S.

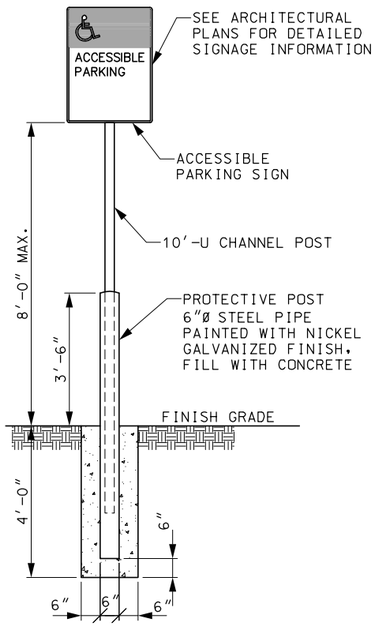

TYPICAL CHANNEL MOUNTING
FOR ACCESSIBLE SIGNS

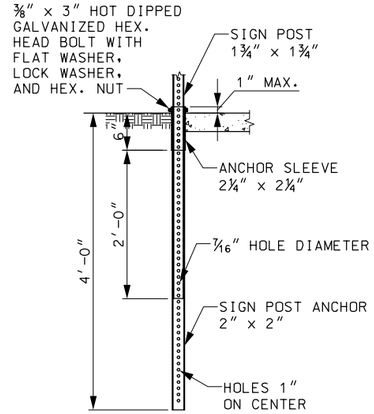

SIGN SIZE	TELESCOPIC POST SIZE
5 S.F. AND UNDER	1 – 1¾″ x 1¾″
OVER 5 S.F. UP TO 10 S.F.	1 – 2″ x 2″
OVER 10 S.F. UP TO 20 S.F.*	2 – 2″ x 2″

* SIGNS WITH A WIDTH OF 4′ AND OVER SHALL REQUIRE 2 POSTS

P-5 POST GENERAL NOTES:

1. BREAKAWAY SIGN SUPPORTS SHALL BE FABRICATED FROM STEEL AND SHALL CONFORM TO MASSACHUSETTS DEPT. OF PUBLIC WORKS STANDARD SPECIFICATIONS FOR HIGHWAYS AND BRIDGES, AND STANDARD DRAWINGS FOR SIGNS AND SUPPORTS (CURRENT EDITIONS).

2. THE STEEL POSTS SHALL CONFORM TO ASTM-A366. THE CROSS SECTION OF THE POST SHALL BE SQUARE TUBE FORMED OF 12 GAUGE (.105″ U.S.S. GRADE) COLD-ROLLED CARBON STEEL SHEETS WHICH HAVE BEEN ZINC COATED (1.25 oz.) CONFORMING TO ASTM-A525, CAREFULLY ROLLED TO SIZE AND WELDED DIRECTLY IN THE CORNER BY HIGH FREQUENCY RESISTANCE WELDING OR EQUAL AND EXTERNALLY SCARFED TO AGREE WITH CORNER RADII. STANDARD OUTSIDE CORNER RADIUS SHALL BE 5/32″ ±1/64″. ALL BOLTS SHALL CONFORM TO ASTM-A307, CLASS A. ALL BOLTS, NUTS AND WASHERS SHALL BE GALVANIZED AS PER ASTM-A153.

METHOD OF INSTALLATION:

(CONCRETE, BITUMINOUS CONCRETE, OR GROUND SURFACES)

1. SIGN POST ANCHOR CAN BE DRIVEN THROUGH BLACK TOP SURFACES WITHOUT FIRST MAKING A HOLE. HOWEVER, IN CONCRETE, BREAKING A HOLE WILL BE NECESSARY. DRIVE SIGN POST ANCHOR TO WITHIN THREE OR FOUR INCHES OF SURFACE.

2. PRE-CUT ANCHOR SLEEVE SO THAT THE HOLES WILL MATCH AND STILL BE FLUSH WITH TOP OF SIGN POST ANCHOR. DRIVE ANCHOR SLEEVE UNTIL HOLES MATCH AS NOTED ABOVE, THEN DRIVE BOTH THE SIGN POST ANCHOR AND ANCHOR AND ANCHOR SLEEVE UNTIL ONE HOLE IS EXPOSED ABOVE GROUND FOR BOLT CONNECTION.

3. INSERT SIGN POST AND BOLT IN PLACE.

NOTE: DRIVING CAPS MUST BE USED TO DRIVE POSTS.

P-5 TELESCOPIC POST DETAIL

N.T.S.

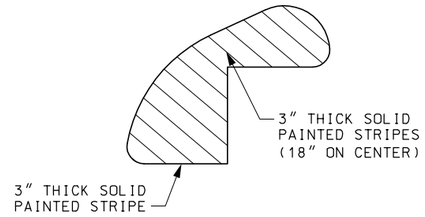

TYPICAL STRIPED ISLAND DETAIL

N.T.S.

90% SUBMITTAL
NOT FOR CONSTRUCTION

MASSACHUSETTS BAY TRANSPORTATION AUTHORITY

FITCHBURG COMMUTER RAIL LINE
IMPROVEMENT PROJECT
CONTRACT NO. G67CN01

SOUTH ACTON STATION
SITE DETAILS
SHEET 2 OF 4

ISSUE	DATE	DESCRIPTION	BY	CHKD.	APP.

HNTB
300 APOLLO DRIVE
CHELMSFORD, MA 01824
(978) 905-4000

PROJECT MANAGER Date

MASSACHUSETTS BAY TRANSPORTATION AUTHORITY

APPROVED BY:

PROJECT MANAGER Date

JACOBS
343 CONGRESS STREET
BOSTON, MA 02110
(617) 242-9222

HORIZ: N/A	DES. BY	DR. BY	CHK. BY	PLAN NO.	ISSUE
VERT: NONE	JPB	CWB	JM		
DATE: 9/8/11				SHEET C-41	

FILE NAME: P:\MBTA\2008\E2X37800\CAD\700CADD\702STATIONS\South Acton\Civil\90% Design\ C-41 Site Details Sheet 2 of 4.dwg
PLOT DATE: Aug 05, 2011 - 4:59pm

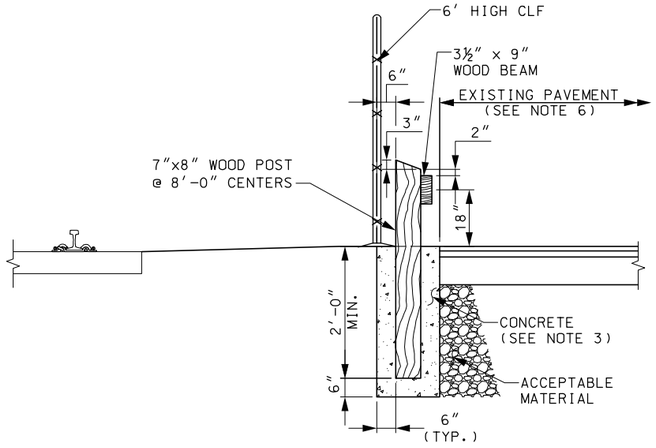

PLACEMENT

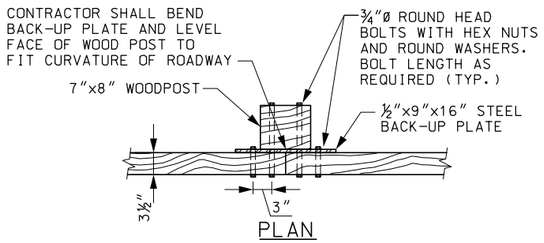

PLAN

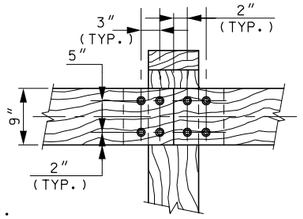

ELEVATION

NOTES:

1. BACKUP PLATE, BOLTS, NUTS, & WASHERS TO BE GALVANIZED.
2. WOOD POSTS AND BEAMS SHALL BE STANDARD ROUGH SAWN AND TO THE SIZE AND LENGTHS SHOWN. POST AND RAILS SHALL BE SOUTHERN YELLOW PINE. ALL WOOD SHALL BE PRESSURE-TREATED WITH PENTACHLOROPHENOL WITH A MINIMUM RETENTION OF 0.60 POUNDS PER CU. FT. OF WOOD OR TREATED IN ACCORDANCE WITH AWDA SPECIFICATION C2.
3. POSTS SHALL BE SET IN 2500 P.S.I. BACKFILL CONCRETE.
4. CONTRACTOR SHALL COORDINATE GUARDRAIL INSTALLATION WITH ENGINEER TO MAINTAIN SUFFICIENT COMMUTER PARKING AT ALL TIMES.
5. SEE SITE PLANS FOR GUARDRAIL LIMITS.
6. CONTRACTOR TO PROTECT EXISTING PAVEMENT DURING INSTALLATION.

WOOD GUARDRAIL
N.T.S.

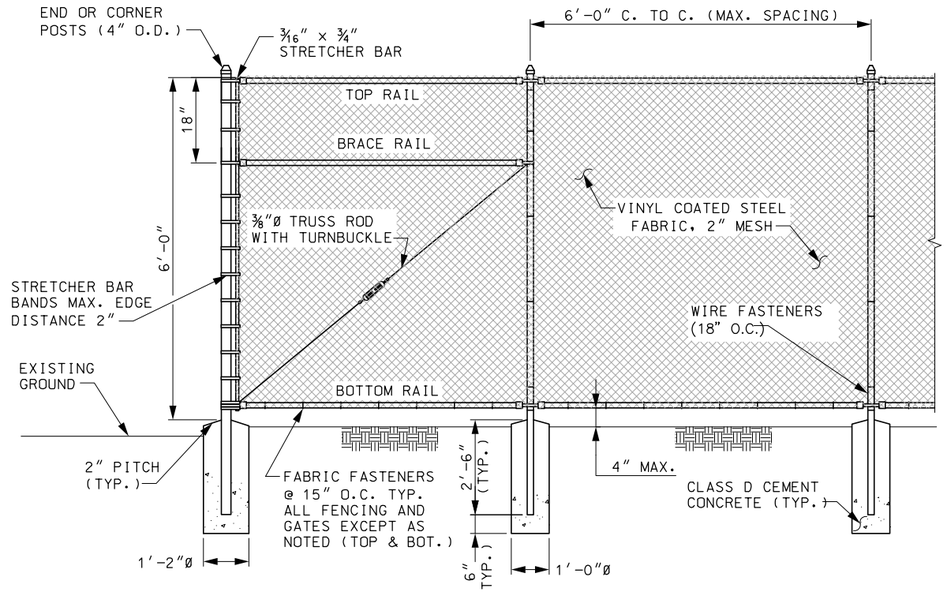

TYPICAL END, CORNER OR BRACE PANEL

TYPICAL INTERMEDIATE PANEL

6' HIGH CHAIN LINK FENCE DETAIL
N.T.S.

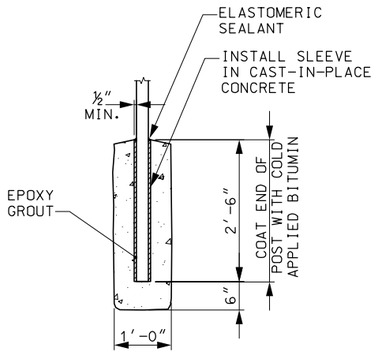

FENCE POST ANCHORED IN CONCRETE
N.T.S.

90% SUBMITTAL
NOT FOR CONSTRUCTION

ISSUE	DATE	DESCRIPTION	BY	CHKD.	APP.

JACOBS
343 CONGRESS STREET
BOSTON, MA 02110
(617) 242-9222

MASSACHUSETTS BAY TRANSPORTATION AUTHORITY

FITCHBURG COMMUTER RAIL LINE
IMPROVEMENT PROJECT
CONTRACT NO. G67CN01

SOUTH ACTON STATION
SITE DETAILS
SHEET 3 OF 4

HNTB
300 APOLLO DRIVE
CHELMSFORD, MA 01824
(978) 905-4000

MASSACHUSETTS BAY TRANSPORTATION AUTHORITY
APPROVED BY:
PROJECT MANAGER Date

PROJECT MANAGER Date

HORIZ: N/A	DES. BY	DR. BY	CHK. BY	PLAN NO.	ISSUE
VERT: NONE	JGA	CWB	JM		
DATE: 9/8/11				SHEET C-42	

FILE NAME: P:\MBTA\2008\E2X37800\CAD\700CADD\702STATIONS\South Acton\Civil\90% Design\ C-42 Site Details Sheet 3 of 4.dwg
PLOT DATE: Aug 05, 2011 - 5:01pm

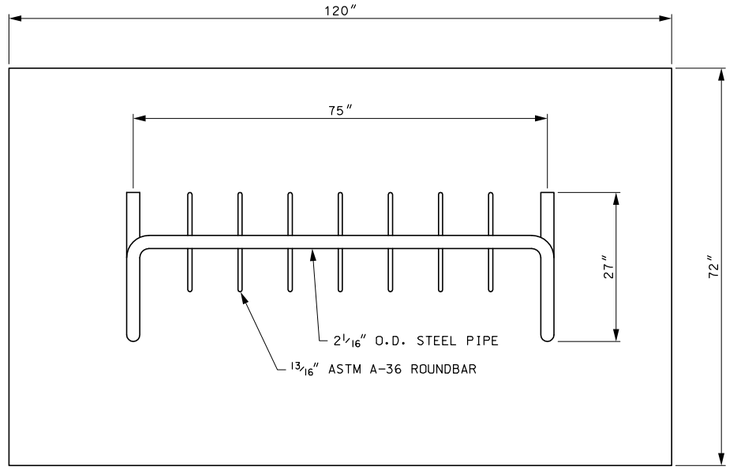

PLAN

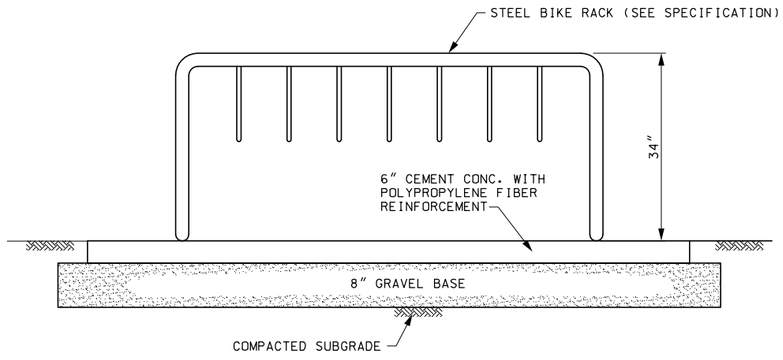

SECTION

STEEL BIKE RACK
N.T.S.

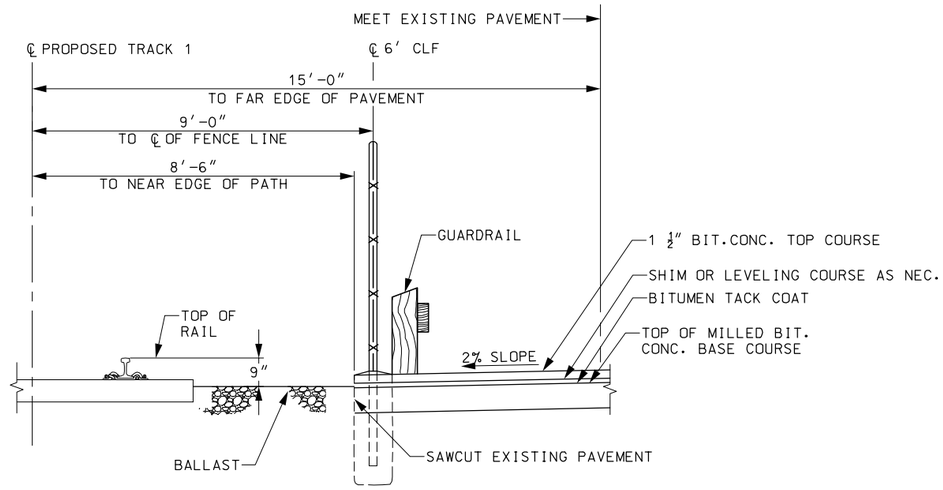

TYPICAL SECTION AT RAILROAD STREET LOT
N.T.S.

90% SUBMITTAL
NOT FOR CONSTRUCTION

FILE NAME: P:\MBTA\2008\E2X37800\CAD\700CADD\702STATIONS\South Acton\Civil\90% Design\ C-43 Site Details Sheet 4 of 4.dwg
PLOT DATE: Aug 05, 2011 - 5:02pm

ISSUE	DATE	DESCRIPTION	BY	CHKD.	APP.

JACOBS
343 CONGRESS STREET
BOSTON, MA 02110
(617) 242-9222

MASSACHUSETTS BAY TRANSPORTATION AUTHORITY

FITCHBURG COMMUTER RAIL LINE
IMPROVEMENT PROJECT
CONTRACT NO. G67CN01

SOUTH ACTON STATION
SITE DETAILS
SHEET 4 OF 4

HNTB
300 APOLLO DRIVE
CHELMSFORD, MA 01824
(978) 905-4000

MASSACHUSETTS BAY TRANSPORTATION AUTHORITY
APPROVED BY:
PROJECT MANAGER Date

PROJECT MANAGER Date

HORIZ: N/A	DES. BY	DR. BY	CHK. BY	PLAN NO.	ISSUE
VERT: NONE	JPB	CWB	JM		
DATE: 9/8/11				SHEET C-43	

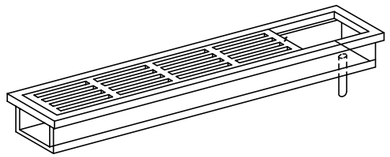

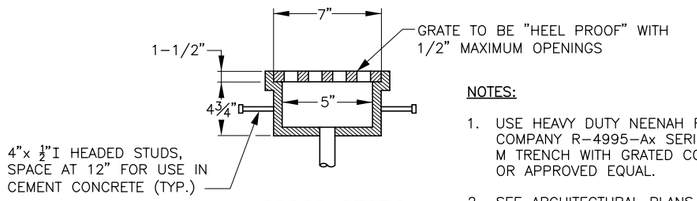

CROSS SECTION

NOTES:

1. USE HEAVY DUTY NEENAH FOUNDRY COMPANY R-4995-Ax SERIES TYPE M TRENCH WITH GRATED COVER, OR APPROVED EQUAL.
2. SEE ARCHITECTURAL PLANS FOR LOCATIONS.

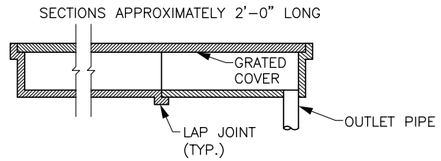

LONGITUDINAL SECTION

TRENCH DRAIN WITH GRATED COVER
N.T.S.

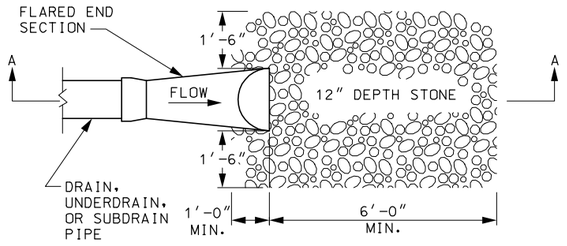

PLAN

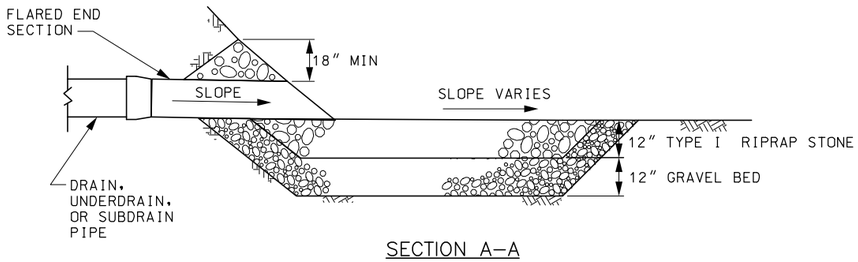

SECTION A-A

FLARED END PIPE RIPRAP DETAIL
N.T.S.

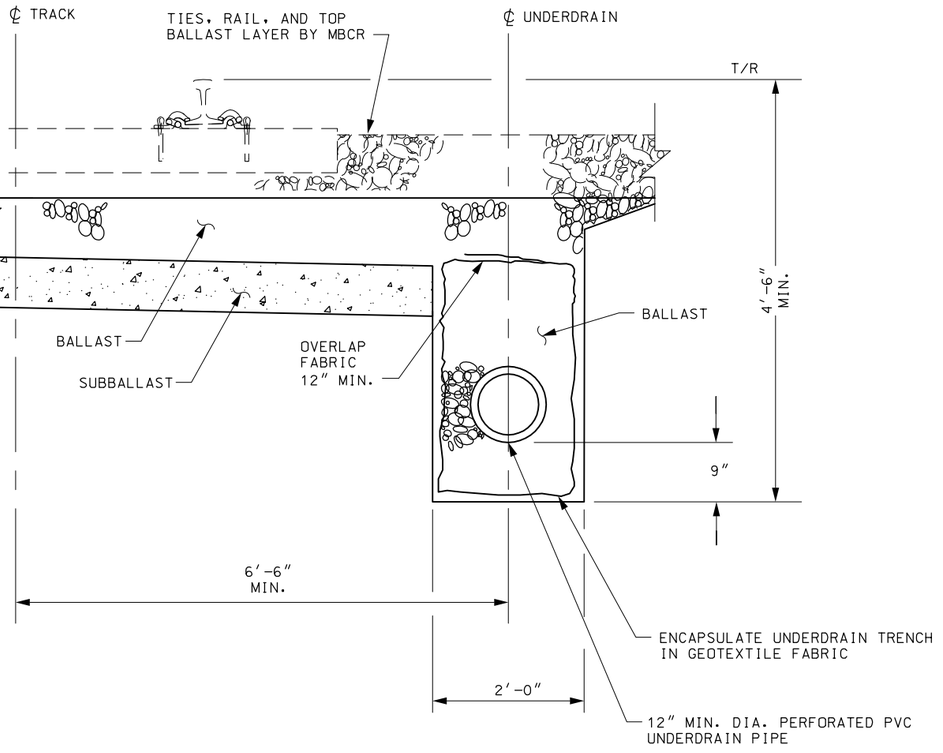

TYPICAL UNDERDRAIN DETAIL
N.T.S.

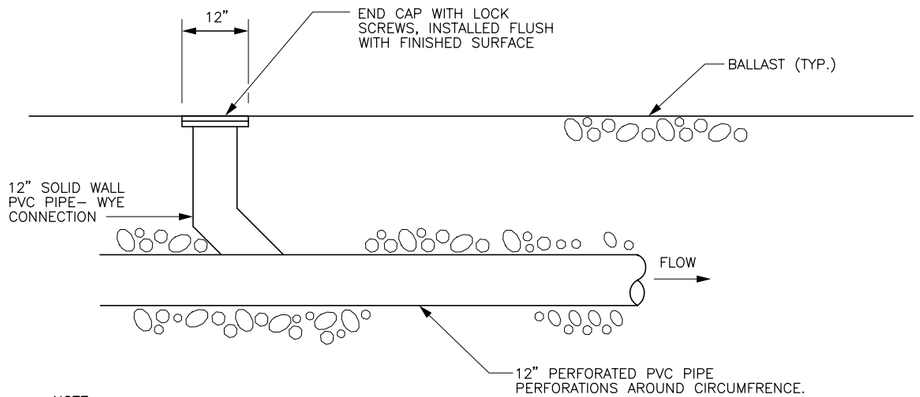

NOTE:

1. CLEAN OUT LOCATIONS SHOWN ON SITE PLANS AND DRAINAGE & GRADING PLANS.

UNDERDRAIN CLEAN OUT DETAIL
N.T.S.

90% SUBMITTAL
NOT FOR CONSTRUCTION

MASSACHUSETTS BAY TRANSPORTATION AUTHORITY
FITCHBURG COMMUTER RAIL LINE IMPROVEMENT PROJECT
CONTRACT NO. G67CN01

SOUTH ACTON STATION DRAINAGE DETAILS SHEET 1 OF 3

ISSUE	DATE	DESCRIPTION	BY	CHKD.	APP.

HNTB
300 APOLLO DRIVE
CHELMSFORD, MA 01824
(978) 905-4000

MASSACHUSETTS BAY TRANSPORTATION AUTHORITY
APPROVED BY:
PROJECT MANAGER Date
PROJECT MANAGER Date

JACOBS
343 CONGRESS STREET
BOSTON, MA 02110
(617) 242-9222

HORIZ: N/A	DES. BY	DR. BY	CHK. BY	PLAN NO.	ISSUE
VERT: NONE	JPB	CWB	JM		
DATE: 9/8/11				SHEET C-45	

FILE NAME: P:\MBTA\2008\E2X37800\CAD\700CADD\702STATIONS\South Acton\Civil\90% Design\ C-45 thru C-47 Drainage Details Sheet.dwg
PLOT DATE: Aug 04, 2011 - 4:14pm

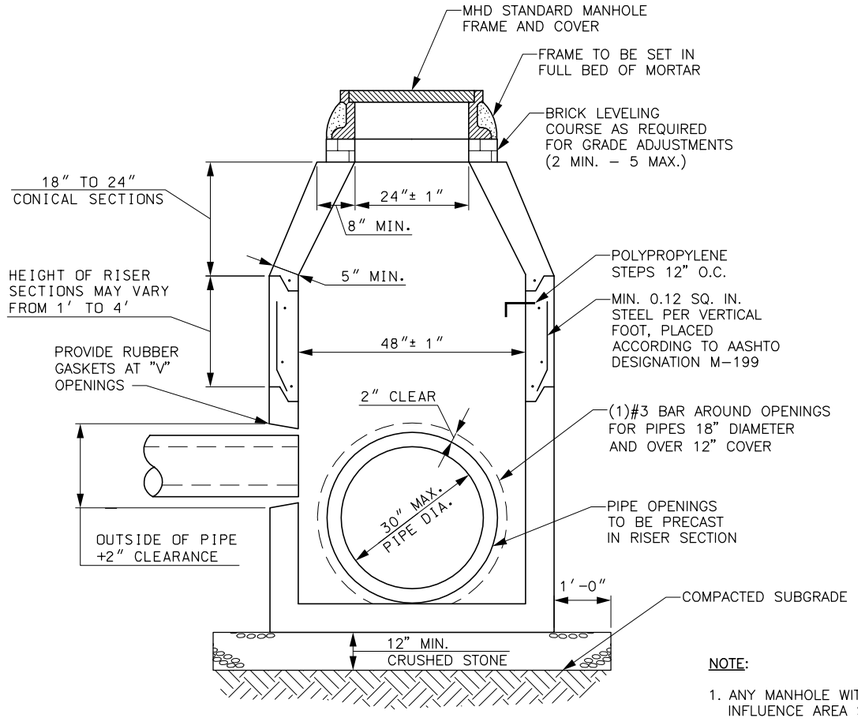

NOTE:

1. ANY MANHOLE WITHIN TRACK INFLUENCE AREA SHALL BE DESIGNED FOR E–80 LOADING.

PRECAST CONCRETE DRAIN MANHOLE

9 FEET OR LESS IN DEPTH
N.T.S.

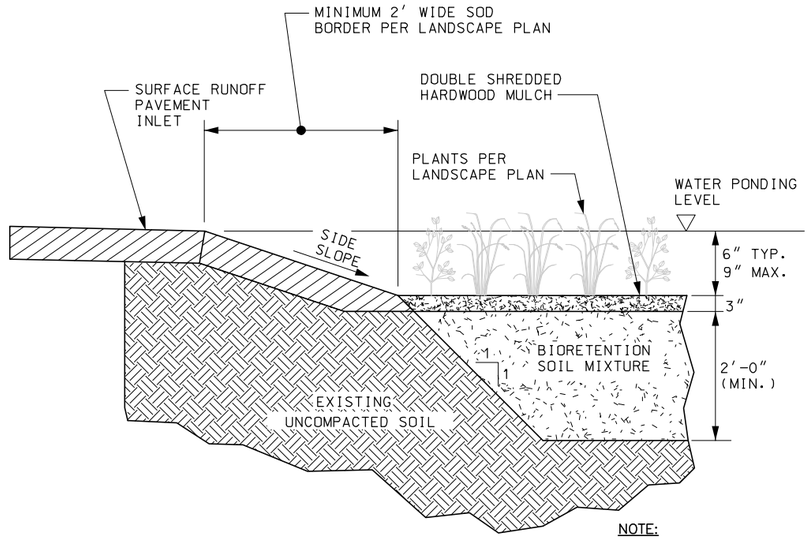

BIORETENTION BASIN

N.T.S.

NOTE:

1. 12" DIAM. PIPES FROM CB'S @ DROP OFF AREA DRAIN INTO BIORETENTION BASIN, SEE SITE PLANS.

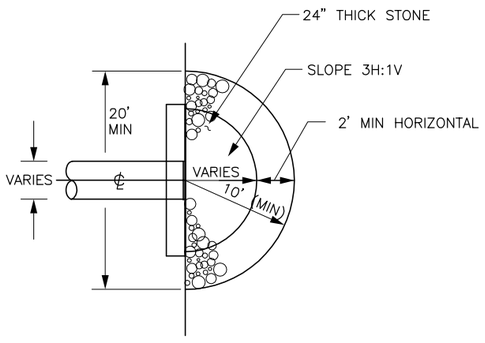

PLAN

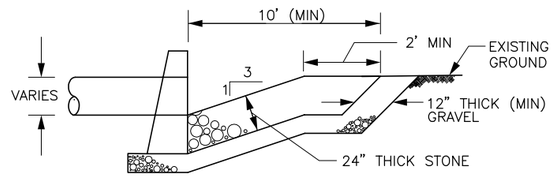

SIDE ELEVATION

RIPRAP INLET PROTECTION

N.T.S.

90% SUBMITTAL
NOT FOR CONSTRUCTION

ISSUE	DATE	DESCRIPTION	BY	CHKD.	APP.

JACOBS
343 CONGRESS STREET
BOSTON, MA 02110
(617) 242-9222

MASSACHUSETTS BAY TRANSPORTATION AUTHORITY

FITCHBURG COMMUTER RAIL LINE
IMPROVEMENT PROJECT
CONTRACT NO. G67CN01

SOUTH ACTON STATION
DRAINAGE DETAILS
SHEET 2 OF 3

HNTB
300 APOLLO DRIVE
CHELMSFORD, MA 01824
(978) 905-4000

PROJECT MANAGER Date

MASSACHUSETTS BAY TRANSPORTATION AUTHORITY
APPROVED BY:
PROJECT MANAGER Date

HORIZ: N/A	DES. BY	DR. BY	CHK. BY	PLAN NO.	ISSUE
VERT: NONE	JPB	CWB	JM		
DATE: 9/8/11				SHEET C–46	

FILE NAME: P:\MBTA\2008\E2X37800\CAD\700CADD\702STATIONS\South Acton\Civil\90% Design\ C–45 thru C–47 Drainage Details Sheet.dwg
PLOT DATE: Sep 01, 2011 – 3:45pm

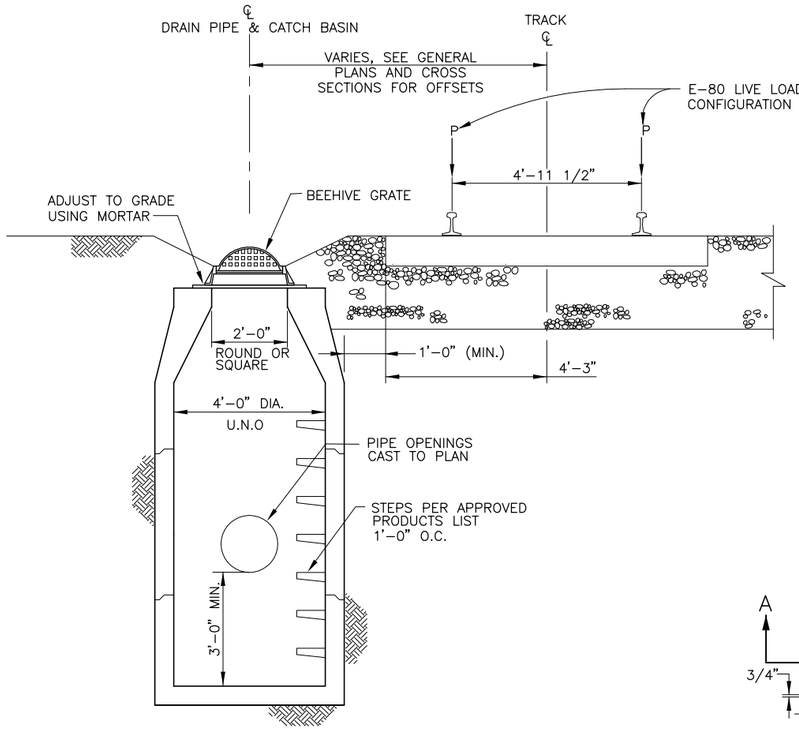

PRECAST CATCH BASIN

NOT TO SCALE

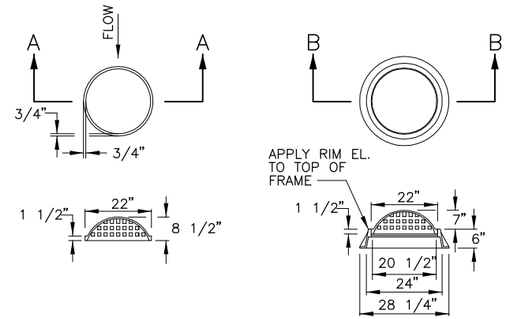

SECTION A–A

NOT TO SCALE

NOTE: MINIMUM WEIGHT – 140 LBS.
MATERIAL – CAST IRON

SECTION B–B

NOT TO SCALE

NOTE: MINIMUM WEIGHT – 285 LBS.
MATERIAL – CAST IRON

BEEHIVE GRATE WITH FRAME

NOT TO SCALE

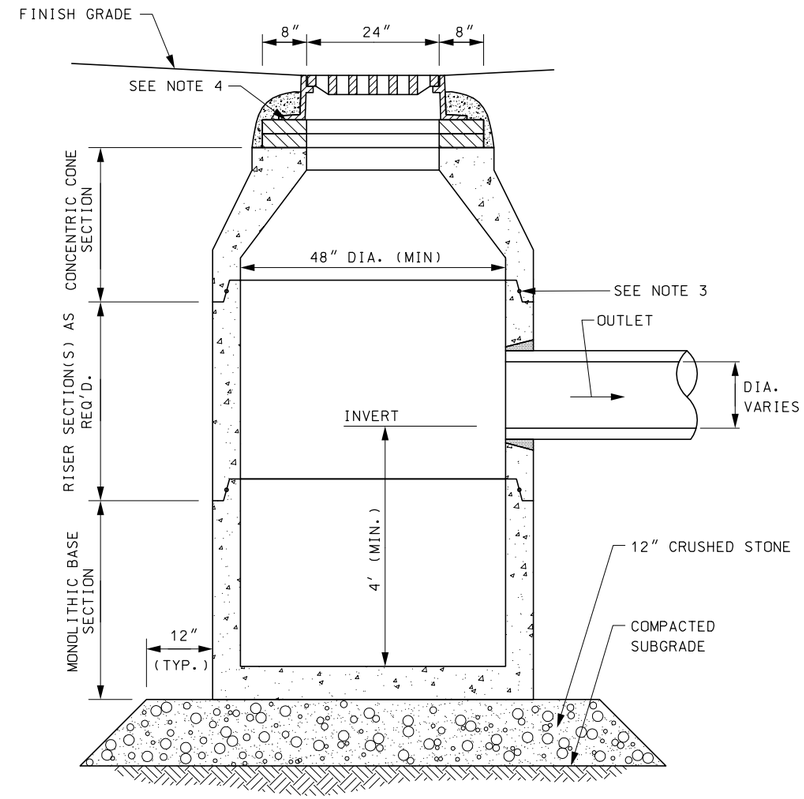

CATCH BASIN (CB)

N.T.S

NOTES:

1. ALL SECTIONS SHALL BE DESIGNED FOR HS–20 LOADING.
2. PROVIDE "V" KNOCKOUTS FOR PIPES WITH 2" MAX. CLEARANCE TO OUTSIDE OF PIPE. MORTAR ALL PIPE CONNECTIONS OR PROVIDE RUBBER GASKETS.
3. JOINT SEALANT BETWEEN PRECAST SECTIONS SHALL BE PREFORMED BUTYL RUBBER.
4. CATCH BASIN FRAME AND GRATE SHALL BE SET IN FULL MORTAR BED. ADJUST TO GRADE WITH CLAY BRICK AND MORTAR (2 BRICK COURSES TYPICALLY, 5 BRICK COURSES MAXIMUM)

90% SUBMITTAL
NOT FOR CONSTRUCTION

MASSACHUSETTS BAY TRANSPORTATION AUTHORITY

FITCHBURG COMMUTER RAIL LINE
IMPROVEMENT PROJECT
CONTRACT NO. G67CN01

SOUTH ACTON STATION DRAINAGE DETAILS SHEET 3 OF 3

ISSUE	DATE	DESCRIPTION	BY	CHKD.	APP.

HNTB
300 APOLLO DRIVE
CHELMSFORD, MA 01824
(978) 905-4000

PROJECT MANAGER Date

MASSACHUSETTS BAY TRANSPORTATION AUTHORITY

APPROVED BY:

PROJECT MANAGER Date

JACOBS
343 CONGRESS STREET
BOSTON, MA 02110
(617) 242-9222

HORIZ: N/A
VERT: NONE
DATE: 9/8/11

DES. BY	DR. BY	CHK. BY
JPB	CWB	JM

PLAN NO.

SHEET C–47

ISSUE

FILE NAME: P:\MBTA\2008\E2X37800\CAD\700CAD0\702STATIONS\South Acton\Civil\90% Design\ C-45 thru C-47 Drainage Details Sheet.dwg
PLOT DATE: Aug 04, 2011 – 4:12pm

CONSTRUCTION STAGING NOTES:

1. SEE RIGHT OF WAY AND PROPERTY PLAN FOR PARCEL OWNERSHIP INFORMATION.

2. THE CONTRACTOR SHALL MINIMIZE CONSTRUCTION-RELATED NOISE AND LIGHT FROM AFFECTING ABUTTER PROPERTIES AND SHALL COMPLY WITH LOCAL AND STATE LAWS REGARDING SUCH.

3. CONSTRUCTION-RELATED VEHICULAR ACCESS TO THE STATION SITE SHALL BE TO THE GREATEST EXTENT POSSIBLE, VIA MAPLE STREET AND STOW STREET. THE PORTION OF MAPLE STREET BETWEEN STOW STREET AND MAIN STREET IS ONE WAY AND WILL REMAIN AS SUCH THROUGHOUT CONSTRUCTION.

4. THE INTERSECTION OF MAIN STREET AND MAPLE STREET HAS POOR DRIVER SITE DISTANCE TRAVELING SOUTHBOUND ON MAIN STREET. THE CONTRACTOR SHALL COORDINATE WITH THE ENGINEER, MASSDOT AND THE TOWN OF ACTON POLICE AND HIGHWAY DEPARTMENTS TO OBTAIN AN APPROVED TRAFFIC CONTROL PLAN DURING CONSTRUCTION. THE PLAN SHALL INCLUDE CONSTRUCTION SIGNAGE OR A TEMPORARY SIGNAL TO PROVIDE ACCESS TO THE SITE FOR ALL CONSTRUCTION RELATED TRAFFIC. SUCH PLAN MAY REQUIRE TRAFFIC OFFICERS AT THE MAPLE AND MAIN STREET INTERSECTION.

5. THE CONTRACTOR SHALL USE, TO THE GREATEST EXTENT POSSIBLE, STATE ROUTE 2 AND 27 AS A HAUL ROUTE TO AND FROM THE STATION SITE AND SHALL GET PRIOR APPROVAL FROM THE TOWN OF ACTON FOR ACCESS ROUTES IN THE STATION AREA, OTHER THAN THOSE MENTIONED ABOVE.

6. THE CONSTRUCTION STAGING PLAN HEREIN IS SUGGESTED FOR BIDDING PURPOSES ONLY. THE CONTRACTOR SHALL SUBMIT A CONSTRUCTION STAGING PLAN FOR PRIOR APPROVAL BY THE ENGINEER. SUCH PLAN SHALL BE COMPLIANT WITH MBTA, TOWN AND STATE REQUIREMENTS AND ADDRESS ALL PROVISIONS OF THE STAGING PLAN. SUCH PLAN SHALL PROVIDE FOR A SAFE AND SECURE SITE AT ALL TIMES THROUGHOUT CONSTRUCTION INCLUDING CONSTRUCTION FENCING, GATES AND SNOW AND ICE MAINTENANCE. THE CONTRACTOR'S PLAN SHALL ALSO ADDRESS TEMPORARY SIGNAGE AND HOW TOWN PARKING, DROP OFF AREAS AND COMMUTER RAIL OPERATIONS AS WELL AS ACCESS TO ABUTTING RESIDENTIAL AND BUSINESS PROPERTIES WILL BE MAINTAINED AT ALL TIMES DURING CONSTRUCTION.

7. CONTRACTOR SHALL MAINTAIN ACCESS TO OR RELOCATE AS NECESSARY TOWN OWNED BIKE LOCKERS FROM MAIN PARKING LOT PLATFORM AREA AS DIRECTED BY THE ENGINEER. CONTRACTOR SHALL PROVIDE TEMPORARY BIKE RACKS DURING CONSTRUCTION CAPABLE OF HOLDING UP TO 30 BIKES. COORDINATE BIKE LOCKER REMOVAL/RELOCATION WITH TOWN ENGINEERING DEPARTMENT.

8. AS REQUIRED THE CONTRACTOR SHALL PROVIDE A SAFE, FREQUENT, CONVENIENT AND CLEAN STATION SHUTTLE SERVICE TO AND FROM A TEMPORARY REMOTE REPLACEMENT PARKING LOT THROUGHOUT CONSTRUCTION. REDUCTION OF STATION PARKING CAPACITY SHALL DETERMINE REMOTE PARKING LOT AND SHUTTLE BUS SIZING AND FREQUENCY. THE CONTRACTOR SHALL PROVIDE AT THE REMOTE REPLACEMENT PARKING LOT A MINIMUM OF A ONE-FOR-ONE PARKING CAPACITY REPLACEMENT FOR EACH SPACE REMOVED FROM OPERATIONS AT THE SOUTH ACTON STATION AND SHALL PROVIDE SUFFICIENT SHUTTLE CAPACITY TO TRANSPORT THE COMMUTER RAIL PATRONS WITHOUT DELAY TO MEET THE SCHEDULED TRAIN ARRIVALS AND DEPARTURES. THE SHUTTLE SERVICE WILL DELIVER THESE REMOTE PARKERS TO THE DROP OFF AREA NEAREST THE OPERATIONAL PLATFORM.

9. CONTRACTOR SHALL COVER OR REMOVE AND STORE ALL PLATFORM AREA SIGNS AFFECTED OR DISTURBED BY THE CONSTRUCTION AS DIRECTED BY THE ENGINEER.

10. THE CONTRACTOR SHALL REUSE (REMOVE & RESET) EXISTING SITE SIGNS AS NECESSARY TO STAGE THE WORK AS APPROVED BY THE ENGINEER. SUCH REUSE SHALL BE DEFINED IN THE CONTRACTORS CONSTRUCTION STAGING PLAN AND APPROVED BY THE ENGINEER.

11. ALL SIGNS AND SITE AMENITIES THAT ARE REMOVED FOR CONSTRUCTION ACTIVITIES AND ARE NOT UTILIZED TO STAGE CONSTRUCTION SHALL BE REMOVED AND SECURELY STORED IN A WEATHER-PROOF FACILITY, IF POSSIBLE. UPON CONSTRUCTION COMPLETION, SIGNS AND AMENITIES NOT REUSED AT THE SITE SHALL BE DELIVERED EITHER TO THE TOWN, TO THE MBTA OR DISCARDED AS APPROVED BY THE ENGINEER.

12. PRIOR TO ANY CLEARING AND GRUBBING OPERATIONS AT AND AROUND THE CONSTRUCTION STAGING AREAS, THE CONTRACTOR SHALL BE GRANTED APPROVAL OF SPECIFIC LIMITS BY THE ENGINEER.

13. REMOVE AND STOCKPILE LOAM FROM AREA OF WORK ONLY AS NEEDED FOR CONSTRUCTION ACTIVITIES AND AS APPROVED BY THE ENGINEER.

14. COORDINATE ALL WORK BY OTHERS (TRACK, SIGNAL AND COMMUNICATIONS IMPROVEMENTS) ADJACENT TO OPERATING TRACKS WITH MBTA RAILROAD OPERATIONS AND MBCR OPERATIONS DEPARTMENTS.

90% SUBMITTAL
NOT FOR CONSTRUCTION

FILE NAME: P:\MBTA\2008\E2X37800\CAD\700CADD\702STATIONS\South Acton\Civil\90% Design\ C-50 Const Staging Notes.dwg
PLOT DATE: Aug 05, 2011 - 5:04pm

ISSUE	DATE	DESCRIPTION	BY	CHKD.	APP.

JACOBS
343 CONGRESS STREET
BOSTON, MA 02110
(617) 242-9222

HNTB
300 APOLLO DRIVE
CHELMSFORD, MA 01824
(978) 905-4000

PROJECT MANAGER Date

MASSACHUSETTS BAY TRANSPORTATION AUTHORITY

APPROVED BY:

PROJECT MANAGER Date

MASSACHUSETTS BAY TRANSPORTATION AUTHORITY

FITCHBURG COMMUTER RAIL LINE
IMPROVEMENT PROJECT
CONTRACT NO. G67CN01

SOUTH ACTON STATION
CONSTRUCTION STAGING NOTES

HORIZ: NONE	DES. BY	DR. BY	CHK. BY	PLAN NO.	ISSUE
VERT: NONE	JPB	KMB	JM		
DATE: 9/8/11				SHEET C-50	

EAST TO BOSTON

WEST TO FITCHBURG

TOWN OF ACTON

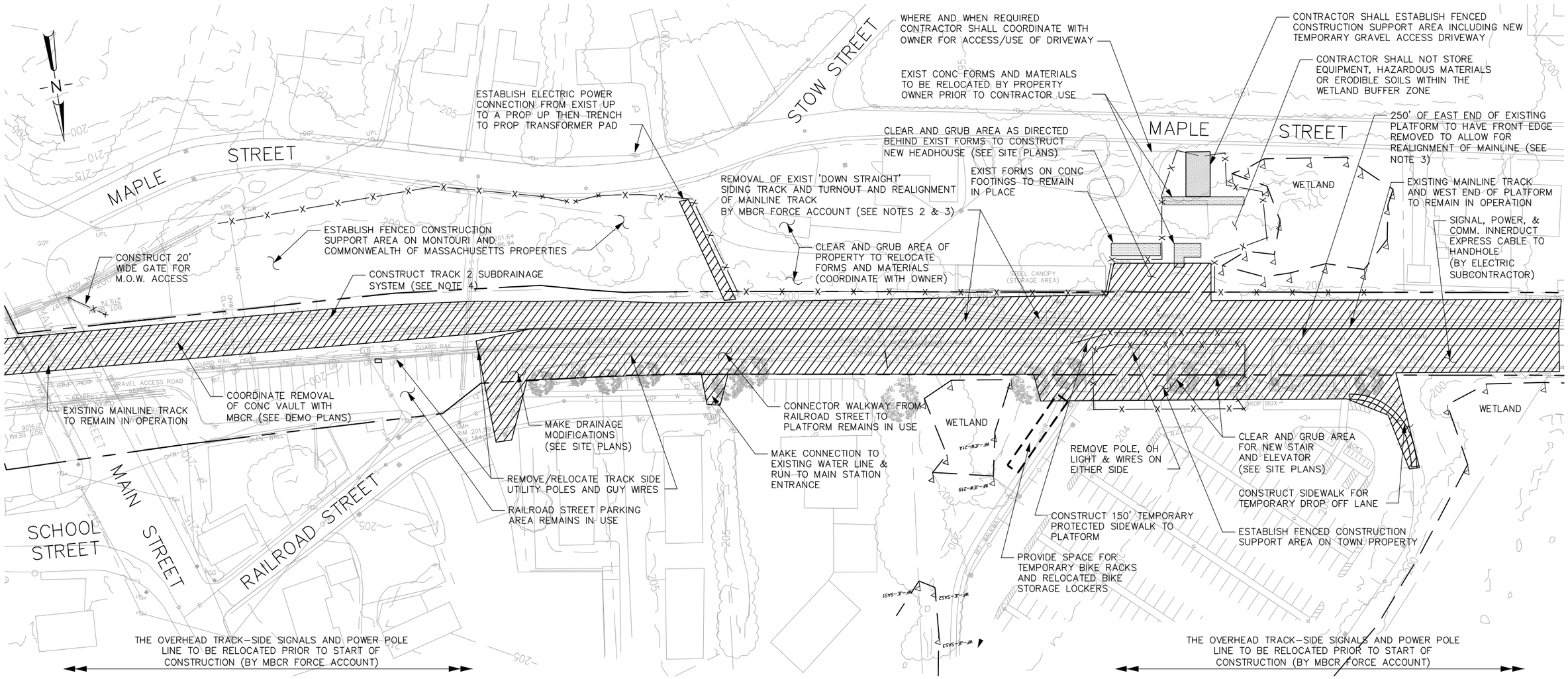

NOTES:

1. FOR CONSTRUCTION STAGING NOTES SEE SHEET C-50.
2. REMOVAL OF THE EXISTING SIDING TRACK BY MBCR FORCE ACCOUNT IS DEPENDENT UPON THE PRIOR CONSTRUCTION AND ACCEPTANCE FOR OPERATION OF THE NEW LITTLETON RUNAROUND SIDING TRACK IN LITTLETON.
3. MAINLINE TRACK TO BE REALIGNED INTO FINAL LOCATION BY MBCR FORCE ACCOUNT. CONTRACTOR SHALL COORDINATE WITH MBCR AS NEC. TO FACILITATE THE TRACK REALIGNMENT INCLUDING PARTIAL REMOVAL OF THE EXIST PLATFORM FACE.
4. UNDERDRAIN ON SOUTHSIDE TO BE INSTALLED ONCE SIDING TRACK IS REMOVED AND MAINLINE TRACK REALIGNMENT IS COMPLETE.
5. CONTRACTOR SHALL COORDINATE WITH PROPERTY OWNERS REGARDING ANY USE OR ACCESS OVER PRIVATE PROPERTY.

90% SUBMITTAL
NOT FOR CONSTRUCTION

PLAN – PHASE 1

APPROXIMATE DURATION – 2 MONTHS

PREPARE CONSTRUCTION SUPPORT AREAS AND TEMPORARY FACILITIES, CLEAR THE SITE, AND RELOCATE & RECONSTRUCT AFFECTED UTILITIES.

LEGEND:

WORK UNDER CONSTRUCTION

HORIZ 40 0 40 80

(SCALE IN FEET)

ISSUE	DATE	DESCRIPTION	BY	CHKD.	APP.

JACOBS 343 CONGRESS STREET BOSTON, MA 02110 (617) 242-9222

MASSACHUSETTS BAY TRANSPORTATION AUTHORITY

FITCHBURG COMMUTER RAIL LINE IMPROVEMENT PROJECT CONTRACT NO. G67CN01

SOUTH ACTON STATION CONSTRUCTION STAGING PLAN PHASE 1

HNTB 300 APOLLO DRIVE CHELMSFORD, MA 01824 (978) 905-4000

PROJECT MANAGER Date

MASSACHUSETTS BAY TRANSPORTATION AUTHORITY

APPROVED BY:

PROJECT MANAGER Date

HORIZ: AS SHOWN	DES. BY	DR. BY	CHK. BY
VERT: NONE	JPB	KMB	JM
DATE: 9/8/11			

PLAN NO. C-51 SHEET

ISSUE

FILE NAME: P:\MBTA\2008\E2X37800\CAD\700CADD\702STATIONS\South Acton\Civil\90% Design\ C-51 Const Staging Plan Phs1.dwg
PLOT DATE: Aug 31, 2011 - 3:32pm

EAST TO BOSTON

WEST TO FITCHBURG

TOWN OF ACTON

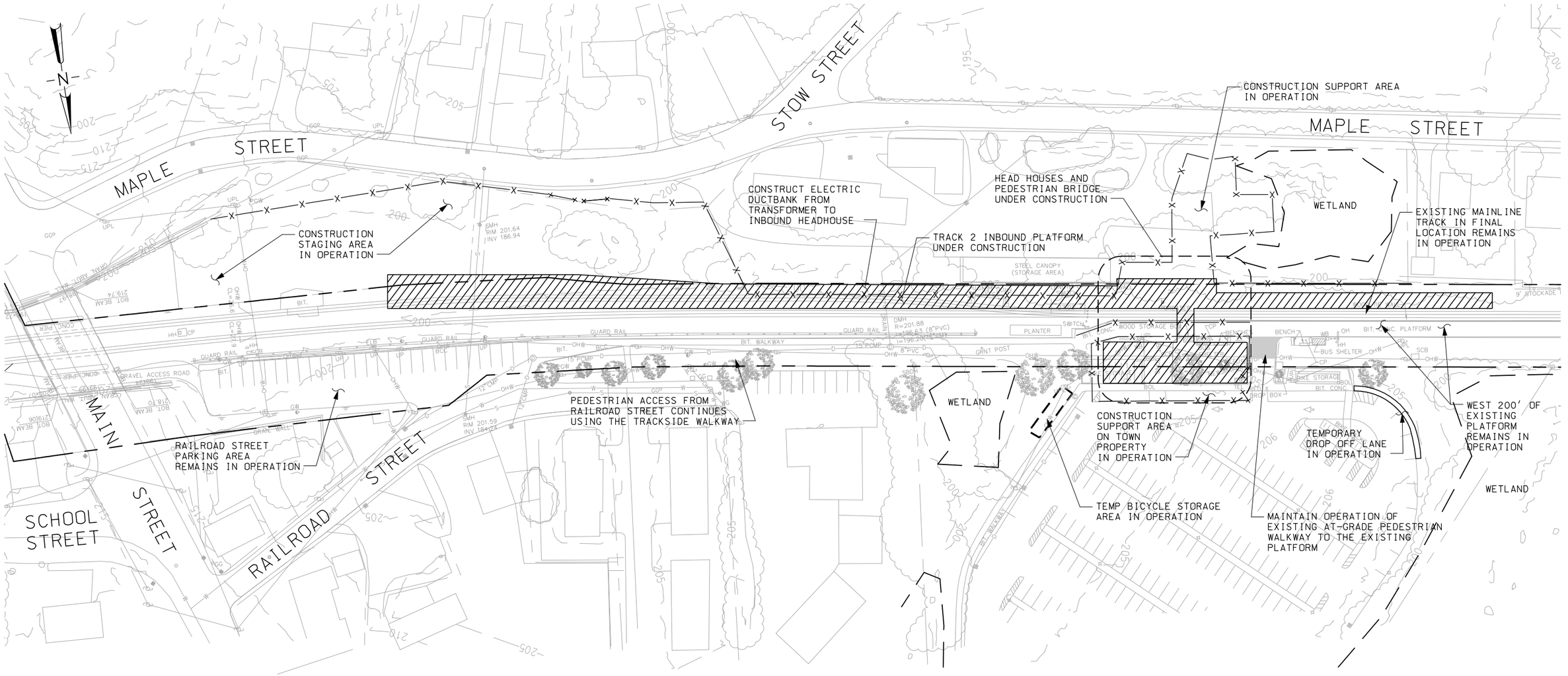

PLAN – PHASE 2

APPROXIMATE DURATION – 9 MONTHS

CONSTRUCT THE INBOUND PLATFORM, BOTH ELEVATOR AND STAIR HEADHOUSES, AND OVERHEAD BRIDGE WHILE EXISTING PLATFORM REMAINS IN OPERATION.

NOTES:

1. FOR CONSTRUCTION STAGING NOTES SEE SHEET C-40.
2. THERE IS NO PEDESTRIAN ACCESS FROM MAPLE STREET. STATION USERS MUST CROSS OVER THE MAIN STREET BRIDGE TO ACCESS THE EXISTING PLATFORM VIA RAILROAD STREET.

LEGEND:

WORK UNDER CONSTRUCTION

HORIZ 40 0 40 80

(SCALE IN FEET)

90% SUBMITTAL
NOT FOR CONSTRUCTION

MASSACHUSETTS BAY TRANSPORTATION AUTHORITY

FITCHBURG COMMUTER RAIL LINE IMPROVEMENT PROJECT
CONTRACT NO. G67CN01

SOUTH ACTON STATION
CONSTRUCTION STAGING PLAN
PHASE 2

ISSUE	DATE	DESCRIPTION	BY	CHKD.	APP.

HNTB 300 APOLLO DRIVE CHELMSFORD, MA 01824 (978) 905-4000

JACOBS 343 CONGRESS STREET BOSTON, MA 02110 (617) 242-9222

MASSACHUSETTS BAY TRANSPORTATION AUTHORITY
APPROVED BY:
PROJECT MANAGER Date
PROJECT MANAGER Date

HORIZ: AS SHOWN	DES. BY	DR. BY	CHK. BY	PLAN NO.	ISSUE
VERT: NONE	JPB	KMB	JM		
DATE: 9/8/11				SHEET C-52	

FILE NAME: P:\MBTA\2008\E2X37800\CAD\700CADD\702STATIONS\South Acton\Civil\90% Design\ C-52 Const Staging Plan Phs2.dwg
PLOT DATE: Aug 30, 2011 - 4:33pm

EAST TO BOSTON

WEST TO FITCHBURG

TOWN OF ACTON

N

MAPLE STREET

STOW STREET

MAPLE STREET

MAIN STREET

SCHOOL STREET

RAILROAD STREET

DROP OFF AREA AND ENTRANCE WALKWAY UNDER CONSTRUCTION

TRACK 2 PLATFORM IN OPERATION

CONSTRUCTION SUPPORT AREA IN OPERATION AS NECESSARY TO RESTORE AREA AND LANDSCAPE

WETLAND

MAIN ENTRANCE & OVERHEAD BRIDGE IN OPERATION

BIDIRECTIONAL TRACK 2 IN OPERATION

RAILROAD ST. PARKING AREA REMAINS IN OPERATION

WALKWAY FROM RAILROAD STREET REMAINS IN USE

WETLAND

AREA OF BIKE RACKS/LOCKERS RECONFIGURED

ACCESS MAIN ENTRANCE FROM ORIGINAL DROP OFF LANE LOCATION

PERMANENT ACCESSIBLE SPACES IN OPERATION AT POINT CLOSEST TO THE MAIN ENTRANCE

WETLAND

WETLAND

REMOVE EXISTING PLATFORM AND AREA AMENITIES AND PREPARE FOR TRACK 1 SUBGRADE & DRAINAGE SYSTEM WORK THROUGH STATION AREA

RELOCATE BIKE STORAGE LOCKERS

CONVERT FORMER ACCESSIBLE SPACES TO (8) REGULAR SPACES

PLAN – PHASE 3

APPROXIMATE DURATION – 1 MONTHS

COMPLETE AND OPEN MAIN ENTRANCE TO NEW INBOUND PLATFORM VIA OVERHEAD BRIDGE, STAIRS, AND ELEVATORS. COMPLETE ACCESS FROM MAPLE STREET.

NOTES:

1. FOR CONSTRUCTION STAGING NOTES SEE SHEET C-50.
2. THERE IS NO PEDESTRIAN ACCESS FROM MAPLE STREET. STATION USERS MUST CROSS OVER THE MAIN STREET BRIDGE TO ACCESS THE EXISTING PLATFORM FROM RAILROAD STREET.
3. A MINIMUM OF 5 ACCESSIBLE SPACES SHALL REMAIN IN OPERATION AT ALL TIMES.

LEGEND:

WORK UNDER CONSTRUCTION

HORIZ 40 0 40 80

(SCALE IN FEET)

90% SUBMITTAL
NOT FOR CONSTRUCTION

ISSUE	DATE	DESCRIPTION	BY	CHKD.	APP.

JACOBS 343 CONGRESS STREET BOSTON, MA 02110 (617) 242-9222

MASSACHUSETTS BAY TRANSPORTATION AUTHORITY

FITCHBURG COMMUTER RAIL LINE IMPROVEMENT PROJECT CONTRACT NO. G67CN01

SOUTH ACTON STATION CONSTRUCTION STAGING PLAN PHASE 3

HNTB 300 APOLLO DRIVE CHELMSFORD, MA 01824 (978) 905-4000

PROJECT MANAGER Date

MASSACHUSETTS BAY TRANSPORTATION AUTHORITY

APPROVED BY:

PROJECT MANAGER Date

HORIZ: AS SHOWN	DES. BY	DR. BY	CHK. BY	PLAN NO.	ISSUE
VERT: NONE	JPB	KMB	JM		
DATE: 9/8/11				SHEET C-53	

FILE NAME: P:\MBTA\2008\E2X37800\CAD\700CADD\702STATIONS\South Acton\Civil\90% Design\ C-53 Const Staging Plan Phs3.dwg
PLOT DATE: Sep 06, 2011 – 6:25pm

EAST TO BOSTON

WEST TO FITCHBURG

TOWN OF ACTON

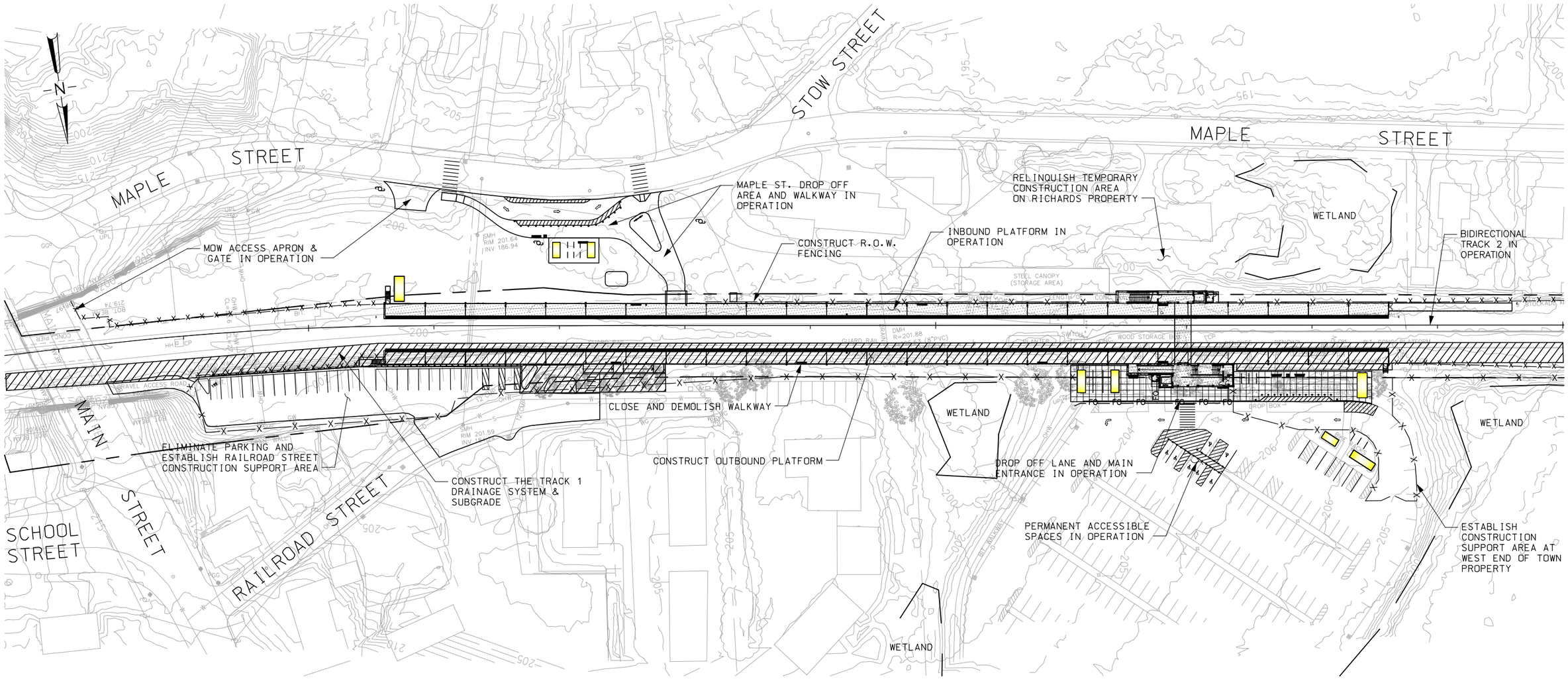

PLAN – PHASE 4

APPROXIMATE DURATION – 4 MONTHS

OPEN MAPLE ST. ENTRANCE. CLOSE RAILROAD STREET LOT AND CONNECTOR WALKWAY AND CONSTRUCT TRACK 1 SUBGRADE, OUTBOUND PLATFORM, WALKWAYS, AND RAMPS.

NOTES:

1. FOR CONSTRUCTION STAGING NOTES SEE SHEET C-50.
2. THERE IS NO PEDESTRIAN ACCESS FROM RAILROAD STREET DURING THIS PHASE. STATION USERS MUST USE THE MAPLE ST. ENTRANCE OR THE PEDESTRIAN BRIDGE AT THE MAIN ENTRANCE VIA THE CENTRAL STREET PARKING LOT TO ACCESS THE NEW INBOUND PLATFORM.

LEGEND:

WORK UNDER CONSTRUCTION

HORIZ 40 0 40 80

(SCALE IN FEET)

90% SUBMITTAL
NOT FOR CONSTRUCTION

ISSUE	DATE	DESCRIPTION	BY	CHKD.	APP.

JACOBS 343 CONGRESS STREET BOSTON, MA 02110 (617) 242-9222

MASSACHUSETTS BAY TRANSPORTATION AUTHORITY

FITCHBURG COMMUTER RAIL LINE IMPROVEMENT PROJECT
CONTRACT NO. G67CN01

SOUTH ACTON STATION
CONSTRUCTION STAGING PLAN
PHASE 4

HNTB 300 APOLLO DRIVE CHELMSFORD, MA 01824 (978) 905-4000

PROJECT MANAGER Date

MASSACHUSETTS BAY TRANSPORTATION AUTHORITY

APPROVED BY:

PROJECT MANAGER Date

HORIZ: AS SHOWN	DES. BY	DR. BY	CHK. BY	PLAN NO.	ISSUE
VERT: NONE	JPB	KMB	JM		
DATE: 9/8/11				SHEET C-54	

FILE NAME: P:\MBTA\2008\E22x37800\CAD\700CADD\702STATIONS\South Acton\Civil\90% Design\ C-54 Const Staging Plan Phs4.dwg
PLOT DATE: Sep 06, 2011 – 6:26pm

EAST TO BOSTON

WEST TO FITCHBURG

TOWN OF ACTON

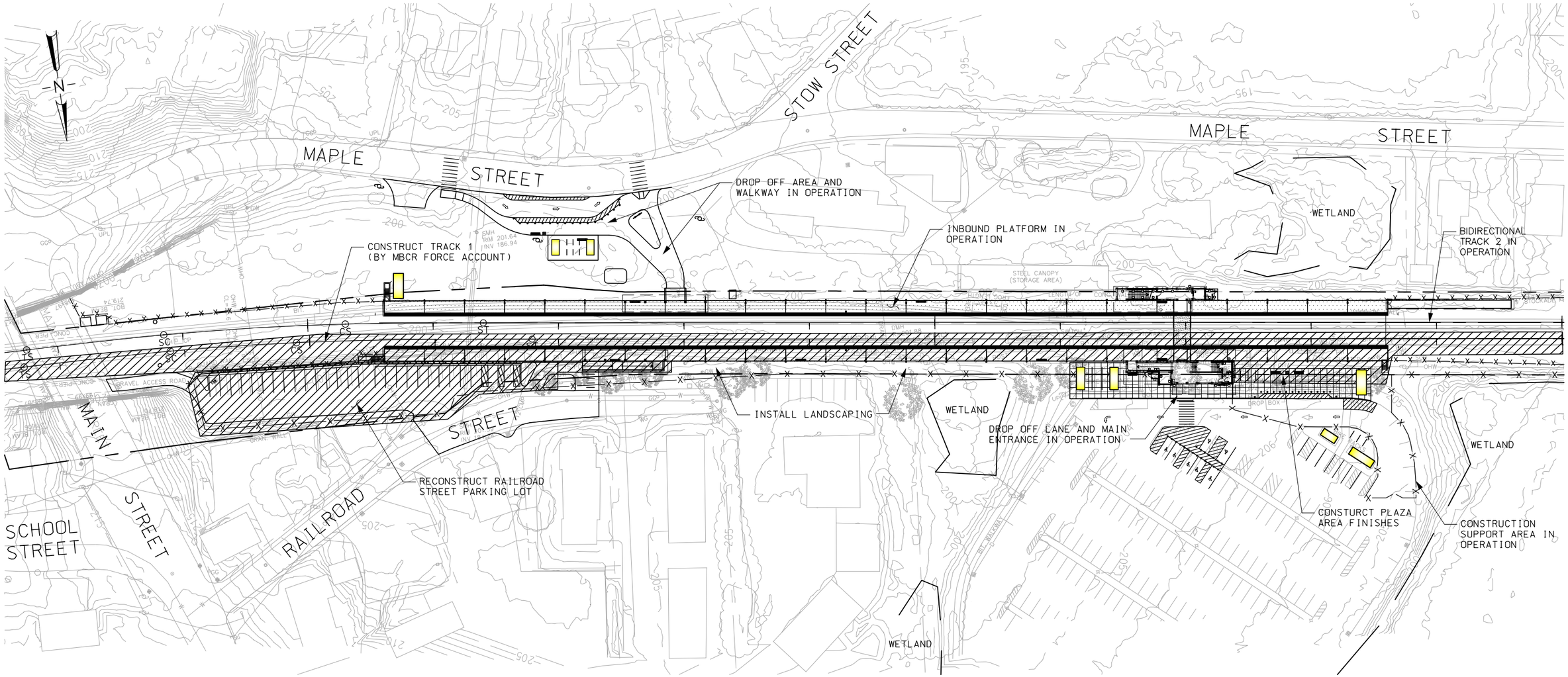

PLAN – PHASE 5

APPROXIMATE DURATION – 1 MONTHS

COMPLETE CONSTRUCTION OF RAILROAD STREET PARKING AREA, TRACK 1 CONSTRUCTION (BY MBCR FORCE ACCOUNT) & PERFORM ALL SYSTEMS TESTING.

NOTES:

1. FOR CONSTRUCTION STAGING NOTES SEE SHEET C-50.
2. PEDESTRIAN ACCESS IS AVAILABLE FROM MAPLE STREET AND THE MAIN PARKING LOT.

LEGEND:

WORK UNDER CONSTRUCTION

HORIZ 40 0 40 80

(SCALE IN FEET)

90% SUBMITTAL
NOT FOR CONSTRUCTION

ISSUE	DATE	DESCRIPTION	BY	CHKD.	APP.

JACOBS
343 CONGRESS STREET
BOSTON, MA 02110
(617) 242-9222

MASSACHUSETTS BAY TRANSPORTATION AUTHORITY

FITCHBURG COMMUTER RAIL LINE IMPROVEMENT PROJECT
CONTRACT NO. G67CN01

SOUTH ACTON STATION CONSTRUCTION STAGING PLAN PHASE 5

HNTB
300 APOLLO DRIVE
CHELMSFORD, MA 01824
(978) 905-4000

PROJECT MANAGER Date

MASSACHUSETTS BAY TRANSPORTATION AUTHORITY

APPROVED BY:

PROJECT MANAGER Date

HORIZ: AS SHOWN	DES. BY	DR. BY	CHK. BY	PLAN NO.	ISSUE
VERT: NONE	JPB	KMB	JM		
DATE: 9/8/11				SHEET C-55	

FILE NAME: P:\MBTA\2008\E2X37800\CAD\700CADD\702STATIONS\South Acton\Civil\90% Design\ C-55 Const Staging Plan Phs5.dwg
PLOT DATE: Sep 06, 2011 - 6:26pm

EAST TO BOSTON

WEST TO FITCHBURG

TOWN OF ACTON

N

MAPLE STREET

STOW STREET

MAPLE STREET DROP OFF AREA AND WALKWAY IN OPERATION

INBOUND PLATFORM IN OPERATION

WETLAND

TRACK 2 IN OPERATION

STEEL CANOPY (STORAGE AREA)

WOOD STORAGE BUILDING

M.O.W. GATE

MAIN STREET

REOPEN THE RAILROAD STREET PARKING LOT

OPEN THE PLATFORM ENTRANCEWAY FROM RAILROAD STREET

OUTBOUND PLATFORM IN OPERATION

WETLAND

DROP OFF LANE AND MAIN ENTRANCE TO BOTH PLATFORMS IN OPERATION

NEW TRACK 1 IN OPERATION

WETLAND

SCHOOL STREET

RAILROAD

RESTORE DROP OFF AND PARKING SPACES TO ORIGINAL CONDITION

WETLAND

PLAN – PHASE 6

APPROXIMATE DURATION – 1 MONTHS

REMOVE ALL CONSTRUCTION RELATED MEASURES AND RESTORE ALL STAGING AND OTHER DISTURBED AREAS TO THEIR ORIGINAL CONDITION.

NOTES:

1. FOR CONSTRUCTION STAGING NOTES SEE SHEET C-50.

LEGEND:

WORK UNDER CONSTRUCTION

HORIZ 40 0 40 80

(SCALE IN FEET)

90% SUBMITTAL
NOT FOR CONSTRUCTION

MASSACHUSETTS BAY TRANSPORTATION AUTHORITY

FITCHBURG COMMUTER RAIL LINE IMPROVEMENT PROJECT
CONTRACT NO. G67CN01

SOUTH ACTON STATION
CONSTRUCTION STAGING PLAN
PHASE 6

ISSUE	DATE	DESCRIPTION	BY	CHKD.	APP.

JACOBS 343 CONGRESS STREET BOSTON, MA 02110 (617) 242-9222

HNTB 300 APOLLO DRIVE CHELMSFORD, MA 01824 (978) 905-4000

PROJECT MANAGER Date

MASSACHUSETTS BAY TRANSPORTATION AUTHORITY

APPROVED BY:

PROJECT MANAGER Date

HORIZ: AS SHOWN	DES. BY	DR. BY	CHK. BY	PLAN NO.	ISSUE
VERT: NONE	JPB	KMB	JM		
DATE: 9/8/11				SHEET C-56	

FILE NAME: P:\MBTA\2008\E22x37800\CAD\700CADD\702STATIONS\South Acton\Civil\90% Design\ C-56 Const Staging Plan Phs6.dwg
PLOT DATE: Sep 06, 2011 – 6:27pm

EAST TO BOSTON

WEST TO FITCHBURG

TOWN OF ACTON

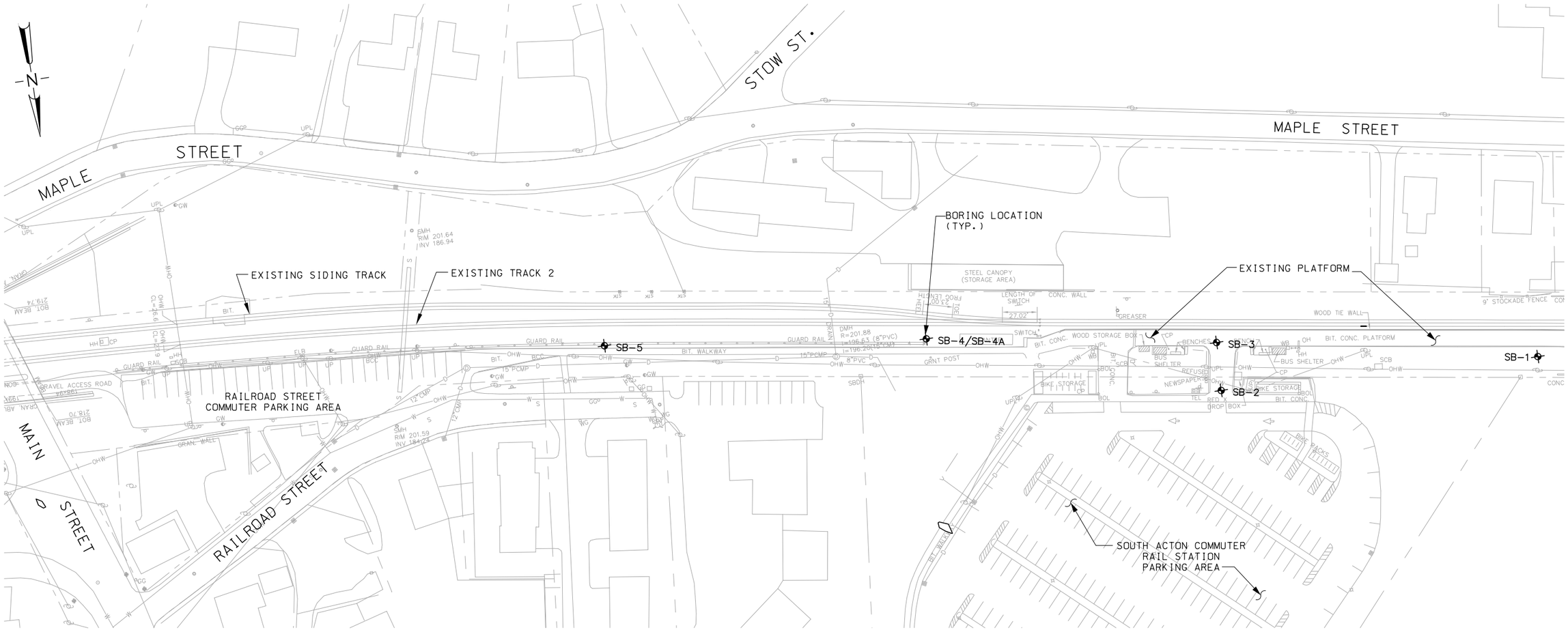

BORING LOCATION PLAN

NOTES:

1. FOR SPECIFIC BORING DATA SEE SHEETS GT-2 AND GT-3.
2. THE INFORMATION SHOWN ON THIS DRAWING CONCERNING TYPE AND LOCATION OF UNDERGROUND UTILITIES IS NOT GUARANTEED TO BE ACCURATE OR ALL INCLUSIVE. THE CONTRACTOR IS RESPONSIBLE FOR MAKING HIS OR HER OWN DETERMINATION AS TO THE TYPE AND LOCATION OF UNDERGROUND UTILITIES AS MAY BE NECESSARY TO AVOID DAMAGES THERETO.

90% SUBMITTAL
NOT FOR CONSTRUCTION

HORIZ. 40 0 40 80
(SCALE IN FEET)

ISSUE	DATE	DESCRIPTION	BY	CHKD.	APP.

JACOBS
343 CONGRESS STREET
BOSTON, MA 02110
(617) 242-9222

HNTB
300 APOLLO DRIVE
CHELMSFORD, MA 01824
(978) 905-4000

PROJECT MANAGER Date

MASSACHUSETTS BAY TRANSPORTATION AUTHORITY

APPROVED BY:

PROJECT MANAGER Date

HORIZ: 1" = 40'	DES. BY	DR. BY	CHK. BY
VERT: NONE	AMB	CWB	JAJ
DATE: 9/8/11			

PLAN NO.

SHEET GT-1

ISSUE

MASSACHUSETTS BAY TRANSPORTATION AUTHORITY

FITCHBURG COMMUTER RAIL LINE
IMPROVEMENT PROJECT
CONTRACT NO. G67CN01

SOUTH ACTON STATION
BORING LOCATION PLAN

FILE NAME: P:\MBTA\2008\E2X37800\CAD\700CADD\702STATIONS\South Acton\Geotech\ GT-1 Boring Location Plan.dwg
PLOT DATE: Aug 05, 2011 - 5:16pm

LOG OF TEST BORING

JACOBS

PROJECT	Fitchburg Line Improvements	BORING NO.	SB-1
LOCATION	South Acton Station		SHEET 1 OF 1
OWNER	Massachusetts Bay Commuter Rail		
JOB NUMBER	E2X37800		

INSPECTOR	A. Barbetta	CONTRACTOR	New Hampshire Boring	DRILLER	D. Dunklee
METHOD OF DRILLING		GROUNDWATER READINGS		DRILL RIG	Diedrich D-90

		DATE/TIME	DEPTH(ft)	REMARKS	SPT HAMMER
0	Wash Boring w/ 4" Casing				140 lb Safety
29	Split Spoon Sample	11/6/2008	3	Upon Completion (In Casing)	
30.4	Spoon Refusal				

ELEVATION	204.6		
DATUM	Datum		
GRID	N	2992854	
COORD	E	667256	
DATE START		11/6/08	
DATE END		11/6/08	

DEPTH (ft)	STRATA SYMBOL	SAMPLE DATA SPT/RQD (%)	SAMPLE NO.	DEPTH (ft)	REC. (in)	ELEV.	FIELD CLASSIFICATION AND REMARKS
0		4 5 6 5	SS-1	0 - 2	4		Well graded sand with gravel (SW): mostly medium to coarse sand, little gravel, trace black slag, brown, wet. (FILL)
5		18 9 10 16	SS-2	4 - 6	2	198.6	Well graded sand with gravel (SW): mostly medium to coarse sand, little gravel, trace black slag, trace silt, brown, wet. (FILL)
10		16 4 4 3	SS-3	9 - 11	6		Well graded sand with gravel (SW): mostly med to coarse sand, little gravel, trace silt, trace organics, brown, wet.
15		20 24 16 16	SS-4	14 - 16	16		Poorly graded sand (SP): mostly coarse sand, trace gravel, trace silt, gray, wet.
20		7 20 14 22	SS-5	19 - 21	14		Well graded sand with gravel (SW): mostly fine to coarse sand, little gravel, trace silt, trace clay, gray, wet.
25		17 25 19 18	SS-6	24 - 26	4		Well graded sand with gravel (SW): mostly fine to coarse sand, little gravel, trace silt, gray, wet.
30		63 73 100/5"	SS-7	29 - 30.4	9	174.1	Well graded sand with gravel (SW): mostly fine to coarse sand, little gravel, trace silt, gray, wet.
35							Bottom of Hole at 30.4'.

Page 1: 0-35 feet. Each subsequent page displays 40 feet.

COHESIVE SOIL		NON-COHESIVE SOIL		RELATIVE PROPORTIONS OF SOIL COMPONENTS	
BLOWS/FT	CONSISTENCY	BLOWS/FT	DENSITY		
0 - 2	VERY SOFT	0 - 4	VERY LOOSE	< 10%	TRACE
3 - 4	SOFT	5 - 10	LOOSE	15 - 25%	LITTLE
5 - 8	MEDIUM STIFF	11 - 30	MEDIUM DENSE	30 - 45%	SOME
9 - 15	STIFF	31 - 50	DENSE	50 - 100%	MOSTLY
16 - 30	VERY STIFF	51 +	VERY DENSE		
30 +	HARD				

LEGEND: Auger Sample (AS); Rock Core (RC) and RQD (%) REC (%); Split-Spoon Sample (SS) and Blow Counts per 6" REC (in); Undisturbed (U)-Shelby Tube, (P)-Piston; Jar Sample (JS); Bag Sample (B)

BORING NO. SB-1

LOG OF TEST BORING

JACOBS

PROJECT	Fitchburg Line Improvements	BORING NO.	SB-2
LOCATION	South Acton Station		SHEET 1 OF 1
OWNER	Massachusetts Bay Commuter Rail		
JOB NUMBER	E2X37800		

INSPECTOR	A. Barbetta	CONTRACTOR	New Hampshire Boring	DRILLER	D. Dunklee
METHOD OF DRILLING		GROUNDWATER READINGS		DRILL RIG	Diedrich D-90

		DATE/TIME	DEPTH(ft)	REMARKS	SPT HAMMER
0	Wash Boring w/ 4" Casing				140 lb Safety
13.5	Spoon Refusal	11/7/2008	4	Upon Completion (In Casing)	

ELEVATION	205.0		
DATUM	Datum		
GRID	N	2992845	
COORD	E	667502	
DATE START		11/7/08	
DATE END		11/7/08	

DEPTH (ft)	STRATA SYMBOL	SAMPLE DATA SPT/RQD (%)	SAMPLE NO.	DEPTH (ft)	REC. (in)	ELEV.	FIELD CLASSIFICATION AND REMARKS
0		8 9 13 16	SS-1	0.33 - 2.33	8		Well graded sand with gravel (SW): mostly med to coarse sand, little gravel, brown, wet. (FILL)
5		15 15 9 9	SS-2	4 - 6	14	199.0	Well graded sand with gravel (SW): mostly med to coarse sand, little gravel, trace silt, brown, wet. (FILL)
10		47 44 45 85	SS-3	9 - 11	12		Well graded sand with gravel (SW): mostly med to coarse sand, little gravel, trace silt, dark brown, wet. (Weathered rock fragments in SPT shoe.) -Casing and rotary bit refusal at 13.5'. Probable Bedrock.
15						191.5	Bottom of Hole at 13.5'.
20							
25							
30							
35							

Page 1: 0-35 feet. Each subsequent page displays 40 feet.

COHESIVE SOIL		NON-COHESIVE SOIL		RELATIVE PROPORTIONS OF SOIL COMPONENTS	
BLOWS/FT	CONSISTENCY	BLOWS/FT	DENSITY		
0 - 2	VERY SOFT	0 - 4	VERY LOOSE	< 10%	TRACE
3 - 4	SOFT	5 - 10	LOOSE	15 - 25%	LITTLE
5 - 8	MEDIUM STIFF	11 - 30	MEDIUM DENSE	30 - 45%	SOME
9 - 15	STIFF	31 - 50	DENSE	50 - 100%	MOSTLY
16 - 30	VERY STIFF	51 +	VERY DENSE		
30 +	HARD				

LEGEND: Auger Sample (AS); Rock Core (RC) and RQD (%) REC (%); Split-Spoon Sample (SS) and Blow Counts per 6" REC (in); Undisturbed (U)-Shelby Tube, (P)-Piston; Jar Sample (JS); Bag Sample (B)

BORING NO. SB-2

LOG OF TEST BORING

JACOBS

PROJECT	Fitchburg Line Improvements	BORING NO.	SB-3
LOCATION	South Acton Station		SHEET 1 OF 1
OWNER	Massachusetts Bay Commuter Rail		
JOB NUMBER	E2X37800		

INSPECTOR	A. Barbetta	CONTRACTOR	New Hampshire Boring	DRILLER	D. Dunklee
METHOD OF DRILLING		GROUNDWATER READINGS		DRILL RIG	Diedrich D-90

		DATE/TIME	DEPTH(ft)	REMARKS	SPT HAMMER
0	Wash Boring w/ 4" Casing				140 lb Safety
17	Spoon Refusal	11/10/2008	3	Upon Completion (In Casing)	

ELEVATION	204.1		
DATUM	Datum		
GRID	N	2992808	
COORD	E	667500	
DATE START		11/10/08	
DATE END		11/10/08	

DEPTH (ft)	STRATA SYMBOL	SAMPLE DATA SPT/RQD (%)	SAMPLE NO.	DEPTH (ft)	REC. (in)	ELEV.	FIELD CLASSIFICATION AND REMARKS
0		4 9 10 10	SS-1	0 - 2	17		Well graded sand with gravel (SW): mostly med to coarse sand, little gravel, brown, moist. (FILL)
5		13 9 7 16	SS-2	4 - 6	13	198.1	Well graded sand (SW): mostly med to coarse sand, trace gravel, trace silt, brown/black, wet. (FILL)
10		82 40 29 44	SS-3	9 - 11	15		9-9.2' Well graded gravel (GW): mostly med to coarse gravel. 9.2-10.3' Well graded sand (SW): mostly fine to med sand, trace gravel, trace silt, brown, wet.
15		100/4"	SS-4	14 - 14.3	2		-Weathered rock fragments. Spoon refusal at 14.5'. -Casing and rotary bit refusal at 17'. (Probable Bedrock)
20						187.1	Bottom of Hole at 17'.
25							
30							
35							

Page 1: 0-35 feet. Each subsequent page displays 40 feet.

COHESIVE SOIL		NON-COHESIVE SOIL		RELATIVE PROPORTIONS OF SOIL COMPONENTS	
BLOWS/FT	CONSISTENCY	BLOWS/FT	DENSITY		
0 - 2	VERY SOFT	0 - 4	VERY LOOSE	< 10%	TRACE
3 - 4	SOFT	5 - 10	LOOSE	15 - 25%	LITTLE
5 - 8	MEDIUM STIFF	11 - 30	MEDIUM DENSE	30 - 45%	SOME
9 - 15	STIFF	31 - 50	DENSE	50 - 100%	MOSTLY
16 - 30	VERY STIFF	51 +	VERY DENSE		
30 +	HARD				

LEGEND: Auger Sample (AS); Rock Core (RC) and RQD (%) REC (%); Split-Spoon Sample (SS) and Blow Counts per 6" REC (in); Undisturbed (U)-Shelby Tube, (P)-Piston; Jar Sample (JS); Bag Sample (B)

BORING NO. SB-3

NOTES:

1. BORINGS WERE DRILLED BY NEW HAMPSHIRE BORING INC. IN NOVEMBER 2008.
2. INFORMATION ON EACH BORING LOG IS A COMPILATION OF SUBSURFACE CONDITIONS AND SOIL CLASSIFICATIONS OBTAINED FROM SAMPLES RECOVERED DURING THE FIELD EXPLORATION PROGRAM. SOIL LAYERS HAVE BEEN INTERPRETED BY COMMONLY ACCEPTED GEOTECHNICAL PROCEDURES.
3. REFER TO BORING LOCATION PLAN FOR LOCATIONS OF BORINGS.
4. GROUND SURFACE ELEVATIONS AND LOCATIONS OF BORINGS WERE SURVEYED BY ASEC CORPORATION. ALL VERTICAL CONTROL AND ELEVATIONS ARE BASED ON N.A.V.D. 88.
5. GROUNDWATER LEVELS WERE MEASURED IN THE TEST BORINGS USING A WEIGHTED TAPE AT THE COMPLETION OF DRILLING. THE DATA INDICATED THAT GROUNDWATER LEVELS RANGED FROM APPROXIMATE EL. 201.5 FT TO 198.0 FT. WATER LEVELS RECORDED DURING DRILLING OR AFTER COMPLETION OF THE BORING SHOULD BE CONSIDERED APPROXIMATE AND REFER ONLY TO THE TIMES AND PLACES INDICATED. WATER LEVELS MAY VARY WITH THE CHANGE IN SEASONAL CONDITIONS OR CONSTRUCTION ACTIVITY.
6. THE STANDARD PENETRATION TEST WAS PERFORMED BY DRIVING A 2.0-INCH OUTSIDE DIAMETER, 1.375-INCH INSIDE DIAMETER SPLIT BARREL SAMPLER INTO UNDISTURBED SOIL BY MEANS OF A 140-POUND WEIGHT FALLING FREELY THROUGH A VERTICAL DISTANCE OF 30 INCHES. THE SAMPLER IS NORMALLY DRIVEN THREE OR FOUR SUCCESSIVE 6-INCH INCREMENTS. THE NUMBER OF BLOWS FOR EACH 6-INCH INCREMENT IS NOTED. THE PENETRATION IS NOTED WHENEVER THE PENETRATION INCREMENT VARIES FROM THE STANDARD 6-INCH INCREMENT. THE TOTAL NUMBER OF BLOWS REQUIRED FOR THE FINAL OR MIDDLE 12 INCHES OF PENETRATION IS THE STANDARD PENETRATION RESISTANCE (N) (ASTM D1586).
7. THE SUBSURFACE INFORMATION SHOWN ON THIS DRAWING WAS OBTAINED FOR DESIGN PURPOSES AND MAY NOT BE AN ADEQUATE REPRESENTATION OF ACTUAL CONDITIONS FOR PROJECT CONSTRUCTION. INFORMATION SHOWN, INCLUDING WATER LEVELS, REPRESENTS EXISTING CONDITIONS AT THE SPECIFIC BORING LOCATIONS AT THE TIME THE BORINGS WERE MADE. ALL RISKS RESULTING FROM USE OR INTERPRETATION OF THE SUBSURFACE DATA SHOWN SHALL BE BORNE BY THE CONTRACTOR.
8. SEE SHEET GT-3 FOR BORING LOGS SHEET 2 OF 2.

90% SUBMITTAL
NOT FOR CONSTRUCTION

ISSUE	DATE	DESCRIPTION	BY	CHKD.	APP.

JACOBS 343 CONGRESS STREET BOSTON, MA 02110 (617) 242-9222

MASSACHUSETTS BAY TRANSPORTATION AUTHORITY

FITCHBURG COMMUTER RAIL LINE
IMPROVEMENT PROJECT
CONTRACT NO. G67CN01

SOUTH ACTON STATION
BORING LOGS
SHEET 1 OF 2

HNTB 300 APOLLO DRIVE CHELMSFORD, MA 01824 (978) 905-4000

PROJECT MANAGER Date

MASSACHUSETTS BAY TRANSPORTATION AUTHORITY

APPROVED BY:

PROJECT MANAGER Date

HORIZ: NONE	DES. BY	DR. BY	CHK. BY	PLAN NO.	ISSUE
VERT: NONE	AMB	CWB	JAJ		
DATE: 9/8/11				SHEET GT-2	

FILE NAME: P:\MBTA\2008\E2X37800\CAD\700CADD\702STATIONS\South Acton\Geotech\ GT-2 Boring Logs.dwg
PLOT DATE: Aug 05, 2011 - 5:17pm

LOG OF TEST BORING

JACOBS

PROJECT	Fitchburg Line Improvements	BORING NO.	SB-4
LOCATION	South Acton Station		SHEET 1 OF 1
OWNER	Massachusetts Bay Commuter Rail		
JOB NUMBER	E2X37800		

INSPECTOR	A. Barbetta	CONTRACTOR	New Hampshire Boring	DRILLER	D. Dunklee
METHOD OF DRILLING		GROUNDWATER READINGS		DRILL RIG	Diedrich D-90
0 Wash Boring w/ 4" Casing		DATE/TIME	DEPTH(ft) / REMARKS	SPT HAMMER	140 lb Safety
14 Rollerbit Refusal		11/6/2008	3.5 / Upon Completion (In Casing)		

ELEVATION	201.5		
DATUM	Datum		
GRID	N	2992773	
COORD	E	667722	
DATE START	11/6/08		
DATE END	11/6/08		

DEPTH (ft)	STRATA SYMBOL	SAMPLE DATA SPT/RQD (%)	SAMPLE NO.	DEPTH (ft)	REC. (in)	ELEV.	FIELD CLASSIFICATION AND REMARKS
0						197.5	
5		15 14 13 12	SS-1	4 - 6	14		Well graded sand with gravel (SW): mostly med to coarse sand, little gravel, brown, moist.
10		12 17 22 31	SS-2	9 - 11	18		Well graded sand with gravel (SW): mostly med to coarse sand, little gravel, trace silt, wet.
15						187.5	- Rollerbit refusal at 14'. Relocated to SB-4A. Bottom of Hole at 14'.
20							
25							
30							
35							

Page 1: 0-35 feet. Each subsequent page displays 40 feet.

COHESIVE SOIL		NON-COHESIVE SOIL		RELATIVE PROPORTIONS OF SOIL COMPONENTS	
BLOWS/FT	CONSISTENCY	BLOWS/FT	DENSITY		
0 - 2	VERY SOFT	0 - 4	VERY LOOSE	< 10%	TRACE
3 - 4	SOFT	5 - 10	LOOSE	15 - 25%	LITTLE
5 - 8	MEDIUM STIFF	11 - 30	MEDIUM DENSE	30 - 45%	SOME
9 - 15	STIFF	31 - 50	DENSE	50 - 100%	MOSTLY
16 - 30	VERY STIFF	51 +	VERY DENSE		
30 +	HARD				

LEGEND: Auger Sample (AS); Rock Core (RC) and RQD (%) REC (%); Split-Spoon Sample (SS) and Blow Counts per 6" REC (in); Undisturbed (U)-Shelby Tube, (P)-Piston; Jar Sample (JS); Bag Sample (B)

BORING NO. SB-4

LOG OF TEST BORING

JACOBS

PROJECT	Fitchburg Line Improvements	BORING NO.	SB-4A
LOCATION	South Acton Station		SHEET 1 OF 1
OWNER	Massachusetts Bay Commuter Rail		
JOB NUMBER	E2X37800		

INSPECTOR	A. Barbetta	CONTRACTOR	New Hampshire Boring	DRILLER	D. Dunklee
METHOD OF DRILLING		GROUNDWATER READINGS		DRILL RIG	Diedrich D-90
0 Wash Boring w/ 4" Casing		DATE/TIME	DEPTH(ft) / REMARKS	SPT HAMMER	140 lb Safety
16 NX Rock Core		11/6/2008	3.5 / Upon Completion (In Casing)		
21 Terminated					

ELEVATION	201.5		
DATUM	Datum		
GRID	N	2992773	
COORD	E	667723	
DATE START	11/6/08		
DATE END	11/6/08		

DEPTH (ft)	STRATA SYMBOL	SAMPLE DATA SPT/RQD (%)	SAMPLE NO.	DEPTH (ft)	REC. (in)	ELEV.	FIELD CLASSIFICATION AND REMARKS
0						197.5	
5							
10							
15		13 26 100/5"	SS-3	14 - 15.4	8		Well graded sand with gravel (SW): mostly fine to med sand, little gravel, trace silt, gray, wet. (Rock fragments in shoe.)
		RQD=55	RC-1	16 - 21	50	185.5	Light gray GNEISS, coarse grained, hard, quartz intrusion, highly fractured, sediment in seams, moderate weathering, close joints, poor-fair condition.
20						180.5	Bottom of Hole at 21'.
25							
30							
35							

Page 1: 0-35 feet. Each subsequent page displays 40 feet.

COHESIVE SOIL		NON-COHESIVE SOIL		RELATIVE PROPORTIONS OF SOIL COMPONENTS	
BLOWS/FT	CONSISTENCY	BLOWS/FT	DENSITY		
0 - 2	VERY SOFT	0 - 4	VERY LOOSE	< 10%	TRACE
3 - 4	SOFT	5 - 10	LOOSE	15 - 25%	LITTLE
5 - 8	MEDIUM STIFF	11 - 30	MEDIUM DENSE	30 - 45%	SOME
9 - 15	STIFF	31 - 50	DENSE	50 - 100%	MOSTLY
16 - 30	VERY STIFF	51 +	VERY DENSE		
30 +	HARD				

LEGEND: Auger Sample (AS); Rock Core (RC) and RQD (%) REC (%); Split-Spoon Sample (SS) and Blow Counts per 6" REC (in); Undisturbed (U)-Shelby Tube, (P)-Piston; Jar Sample (JS); Bag Sample (B)

BORING NO. SB-4A

LOG OF TEST BORING

JACOBS

PROJECT	Fitchburg Line Improvements	BORING NO.	SB-5
LOCATION	South Acton Station		SHEET 1 OF 1
OWNER	Massachusetts Bay Commuter Rail		
JOB NUMBER	E2X37800		

INSPECTOR	A. Barbetta	CONTRACTOR	New Hampshire Boring	DRILLER	D. Dunklee
METHOD OF DRILLING		GROUNDWATER READINGS		DRILL RIG	Diedrich D-90
0 Wash Boring w/ 4" Casing		DATE/TIME	DEPTH(ft) / REMARKS	SPT HAMMER	140 lb Safety
5 NX Rock Core		11/7/2008	3.5 / Upon Completion (In Casing)		
10 Terminated					

ELEVATION	201.4		
DATUM	Datum		
GRID	N	2992743	
COORD	E	667969	
DATE START	11/7/08		
DATE END	11/7/08		

DEPTH (ft)	STRATA SYMBOL	SAMPLE DATA SPT/RQD (%)	SAMPLE NO.	DEPTH (ft)	REC. (in)	ELEV.	FIELD CLASSIFICATION AND REMARKS
0		5 10 11 9	SS-1	0 - 2			Well graded gravel with sand (GW): mostly gravel (ballast), some med to coarse sand, trace silt, moist. (FILL)
5		100/6"	SS-2	4 - 4.5			Well graded sand with gravel (SW): mostly coarse sand, some gravel, trace black slag, trace silt, wet. (FILL) (Spoon refusal at 4.5')
		RQD=50	RC-1	5 - 10	60	196.4	Gray/dark gray GNEISS, medium to coarse grained, severe weathering, highly fractured, poor condition.
10						191.4	Bottom of Hole at 10'.
15							
20							
25							
30							
35							

Page 1: 0-35 feet. Each subsequent page displays 40 feet.

COHESIVE SOIL		NON-COHESIVE SOIL		RELATIVE PROPORTIONS OF SOIL COMPONENTS	
BLOWS/FT	CONSISTENCY	BLOWS/FT	DENSITY		
0 - 2	VERY SOFT	0 - 4	VERY LOOSE	< 10%	TRACE
3 - 4	SOFT	5 - 10	LOOSE	15 - 25%	LITTLE
5 - 8	MEDIUM STIFF	11 - 30	MEDIUM DENSE	30 - 45%	SOME
9 - 15	STIFF	31 - 50	DENSE	50 - 100%	MOSTLY
16 - 30	VERY STIFF	51 +	VERY DENSE		
30 +	HARD				

LEGEND: Auger Sample (AS); Rock Core (RC) and RQD (%) REC (%); Split-Spoon Sample (SS) and Blow Counts per 6" REC (in); Undisturbed (U)-Shelby Tube, (P)-Piston; Jar Sample (JS); Bag Sample (B)

BORING NO. SB-5

NOTE:

1. SEE SHEET GT-2 FOR DETAILED NOTES.

90% SUBMITTAL
NOT FOR CONSTRUCTION

ISSUE	DATE	DESCRIPTION	BY	CHKD.	APP.

JACOBS
343 CONGRESS STREET
BOSTON, MA 02110
(617) 242-9222

MASSACHUSETTS BAY TRANSPORTATION AUTHORITY

FITCHBURG COMMUTER RAIL LINE
IMPROVEMENT PROJECT
CONTRACT NO. G67CN01

SOUTH ACTON STATION
BORING LOGS
SHEET 2 OF 2

HNTB
300 APOLLO DRIVE
CHELMSFORD, MA 01824
(978) 905-4000

PROJECT MANAGER Date

MASSACHUSETTS BAY TRANSPORTATION AUTHORITY
APPROVED BY:
PROJECT MANAGER Date

HORIZ: NONE	DES. BY	DR. BY	CHK. BY	PLAN NO.	ISSUE
VERT: NONE	AMB	CWB	JAJ		
DATE: 9/8/11				SHEET GT-3	

FILE NAME: P:\MBTA\2008\E2X37800\CAD\700CADD\702STATIONS\South Acton\Geotech\ GT-3 Boring Logs.dwg
PLOT DATE: Aug 05, 2011 - 5:17pm

SYMBOLS

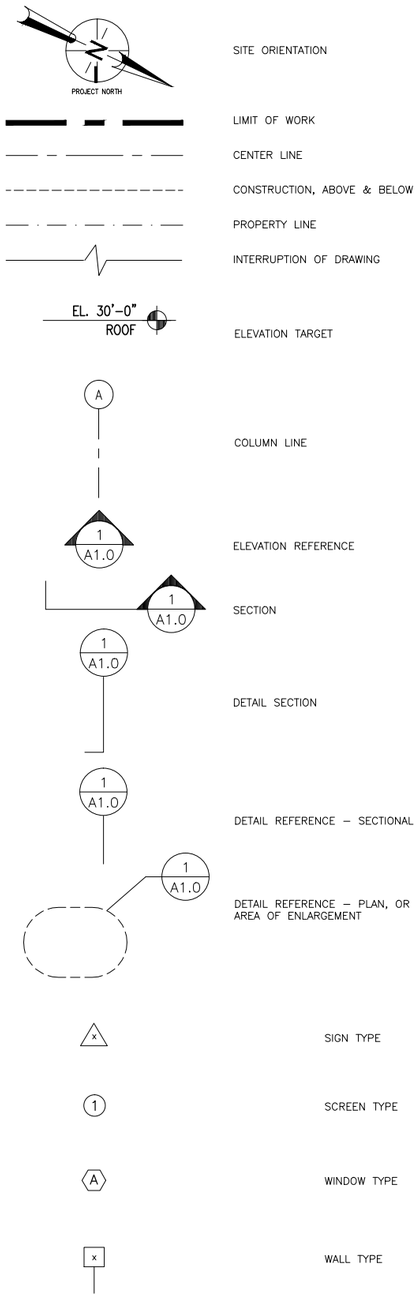

ARCHITECTURAL STEEL NOTES

1. ALL EXTERIOR EXPOSED STEEL TO BE FABRICATED AS "ARCHITECTURALLY" EXPOSED STRUCTURAL STEEL CONFORMING TO ALL REQUIREMENTS OF THAT SPECIFICATION IN THE AISC MANUAL OF STEEL CONSTRUCTION. SECTION 10 CODE OF STANDARD PRACTICE (INCLUDING STRUCTURAL STEEL).
2. ALL EXTERIOR EXPOSED STEEL SHALL BE HOT DIP NICKEL GALVANIZED PER SPECIFICATION SECTION 05041.
3. ALL ARCHITECTURAL STEEL CONNECTIONS SHALL BE DESIGNED WITH THE FIELD ADJUSTABILITY TO ALLOW SPECIFIED TOLERANCES TO BE ACHIEVED.
4. ALL WELDS IN ARCHITECTURAL STEEL SHALL BE SMOOTH AND CONTINUOUS.
5. THE INTENTION OF THESE DOCUMENTS IS TO ELIMINATE ANY AND ALL FIELD WELDING AFFECTING FINISHED, EXPOSED SURFACES. NO BURNING OF ARCHITECTURAL STEEL SHALL BE ALLOWED WITHOUT PRIOR APPROVAL OF THE ENGINEER.
6. ALL ARCHITECTURAL STEEL SHALL BE FABRICATED WATER TIGHT AND ALL STEEL TO STEEL JOINTS SHALL BE SEALED AS INDICATED.
7. ALL REQUIRED VENT AND DRAIN HOLES FOR GALVANIZING SHALL BE SHOWN ON SHOP DRAWINGS FOR APPROVAL.
8. GUARDRAIL IS 2" OD SCHEDULE 40 STEEL PIPE.
9. HANDRAIL IS 1–1/2" OD SCHEDULE 40 STEEL PIPE.
10. ALL GUARDRAILS WITH STEEL SUPPORT BOLTED TO VERTICAL F.B. POSTS INCLUDE 2" X 1/2" F.B. FRAME WITH 1/2" PICKETS, EXCEPT WHERE SPECIFICALLY EXCLUDED. HANDRAILS ARE REQUIRED CONTINUOUSLY ALONG BOTH SIDES OF RAMPS AND STAIRS.
11. OTHER THAN HANDRAILS AND EGRESS STAIR ELEMENTS (INCLUDINIG TREADS, RISERS, STRINGERS, LANDINGS AND RELATED DETAILS, BUT NOT GUARD FENCE) SHALL BE SHOP PAINTED UNLESS SPECIFICALLY NOTED OTHERWISE.
12. REFER TO STRUCTURAL DRAWINGS FOR ADDITIONAL DETAILS.
13. UNO ALL ARCHITECTURAL STEEL SHALL BE GALVANIZED AFTER FABRICATION AND SHOP PAINTED.

GENERAL NOTES

1. CONTRACTOR SHALL FIELD VERIFY ALL CONDITIONS AND DIMENSIONS AND IMMEDIATELY REPORT DISCREPANCIES TO THE ENGINEER.
2. LIMIT OF WORK LINES MAY BE LOCATED ON PRIVATE OR MUNICIPAL PROPERTY. CONTRACTOR SHALL OBTAIN NECESSARY CONSTRUCTION EASEMENTS TO PERFORM WORK IN THOSE AREAS AND SHALL RESTORE THOSE AREAS TO THEIR ORIGINAL CONDITION.
3. PAVED AREAS SHALL BE PITCHED A MINIMUM 1/8" PER FOOT TO PROVIDE POSITIVE DRAINAGE WITHOUT PUDDLING.
4. THE CONTRACTOR SHALL MINIMIZE THE REMOVAL OF PAVEMENT IN AREAS NOT INTENDED TO BE REMOVED, BUT ADJACENT TO NEW CONSTRUCTION; SUCH AS EXISTING PARKING AREAS OR ROADWAYS. EXISTING PAVEMENT TO REMAIN SHALL BE SAWCUT AT THE EDGE WHERE NEW MATERIAL IS TO MEET TO FORM A CLEAN STRAIGHT JOINT.
5. EXISTING OR NEW PAVEMENT STRIPES WILL BE REPAINTED WHERE DAMAGED BY CONSTRUCTION AS DIRECTED BY THE ENGINEER.
6. ALL EXTERIOR EXPOSED VERTICAL AND NEAR VERTICAL CONCRETE SURFACES SHALL RECEIVE A CLEAR ANTI–GRAFFITI AND PROTECTIVE SEALER, AS SPECIFIED.
7. ALL EXTERIOR EXPOSED TO VIEW HORIZONTAL, VERTICAL AND SLOPED CONCRETE SURFACES SHALL RECEIVE PENETRATING CONCRETE SEALER AS SPECIFIED.
8. ALL PRECAST CONCRETE IS ARCHITECTURAL PRECAST. REFER TO STRUCTURAL DRAWINGS FOR REINFORCING, CONNECTIONS, AND BEARING.
9. ALL STEEL IS ARCHITECTURAL EXPOSED STEEL AS DEFINED BY AISC. REFER TO STRUCTURAL DRAWINGS FOR WELDS, BOLTS, CONNECTIONS, AND SIZES.
10. THE CONTRACTOR SHALL EXAMINE THE DOCUMENTS TO VERIFY DIMENSIONS AND LOCATIONS OF STRUCTURAL, ELECTRICAL, LANDSCAPE AND CIVIL DISCIPLINES WHICH MAY NOT BE SHOWN ON ARCHITECTURAL DRAWINGS.
11. THE CONTRACTOR SHALL COORDINATE THE PLANS AND SPECIFICATIONS OF ALL DISCIPLINES AND WORKING DRAWINGS OF EACH TRADE TO DETERMINE THE CORRECT LOCATIONS OF ALL EMBEDDED ITEMS: CONDUITS, SLEEVES, ANCHOR BOLTS, INSERTS, REGLET RECESSES, AND OPENINGS.
12. DESIGN AND CONSTRUCTION OF ALL WORK SHALL CONFORM TO CURRENT EDITION OF THE FOLLOWING:

    MBTA STANDARD SPECIFICATIONS INCLUDING SPECIAL PROVISIONS
    MASSACHUSETTS BUILDING CODE, 780 CMR EIGHTH EDITION
    AMERICANS WITH DISABILITIES ACT (A.D.A.)
    UNIFORM FEDERAL ACCESSIBILITY STANDARDS (UFAS)
    MASSACHUSETTS ARCHITECTURAL ACCESS BOARD RULES AND REGULATIONS

    IN CASE OF CONFLICT BETWEEN THE CODES, STANDARDS, REGULATIONS, SPECIFICATIONS, GENERAL NOTES AND/OR MANUFACTURER'S REQUIREMENTS, USE THE MOST STRINGENT PROVISIONS.

13. ALL EXPOSED CAST IN PLACE CONCRETE TO HAVE ARCHITECTURAL FINISH.

90% SUBMITTAL
NOT FOR CONSTRUCTION

MASSACHUSETTS BAY TRANSPORTATION AUTHORITY
FITCHBURG COMMUTER RAIL LINE
IMPROVEMENT PROJECT
CONTRACT NO. G67PS01

SOUTH ACTON STATION
GENERAL NOTES
SYMBOLS

ISSUE	DATE	DESCRIPTION	BY	CHKD.	APP.

HNTB
300 APOLLO DRIVE
CHELMSFORD, MA 01824
(978) 905–4000

PROJECT MANAGER Date

MASSACHUSETTS BAY TRANSPORTATION AUTHORITY
APPROVED BY:
PROJECT MANAGER Date

Lozano, Baskin, and Associates, Inc.
Architecture•Urban Design•City Planning
205 Mt. Auburn St. Watertown, MA 02472

HORIZ: N/A	DES. BY	DR. BY	CHK. BY	PLAN NO. 169481	ISSUE
VERT: N/A	MB DW	DW	MB		
DATE: 09/08/11				SHEET A–0.1	

FILE NAME: W:\DwgFiles\0814 Fitchburg Main Line\0814.01_So. Acton Station\7.0 Design Development\60% Submission\7.1 Dwg\ 00 A–ABREV.dwg
PLOT DATE: Sep 02, 2011 – 8:08am

ABBREVIATIONS

A	ALGEBRAIC DIFFERENCE OF GRADES
AB	ANCHOR BOLT
ABAN	ABANDON, ABANDONED
ABUT	ABUTMENT
AC	ASPHALTIC CONCRETE
ADD	ADDENDUM
ADDL	ADDITIONAL
ADT	AVERAGE DAILY TRAFFIC
ALUM	ALUMINUM
ALT	ALTERNATE, ALTERNATIVE
APP	APPROVED
APPROX	APPROXIMATE
ARCH	ARCHITECTURAL
ARMJT	ARMORED JOINT
AUX	AUXILIARY
AVE	AVENUE
AVG	AVERAGE
AWG	AMERICAN WIRE GAUGE
B&B	BALLED AND BURLAPPED
BIT	BITUMINOUS
BIT CONC	BITUMINOUS CONCRETE
BL OR ℄	BASE LINE
BLDG	BUILDING
BMA	BITUMINOUS MACADAM
BO	BY OTHERS
BOC	BOTTOM OF CURB
BOD	BOTTOM OF DITCH
BOF	BOTTOM OF FOOTING
BOS	BOTTOM OF STEEL
BOT	BOTTOM BEARING
BRG	BEARING
C	CELSIUS (DEGREE), STEEL CHANNEL
CAT	CATENARY
CB	CATCH BASIN
CBCI	CATCH BASIN WITH CURB INLET
CEM	CEMENT
CF	CUBIC FEET
CFM	CUBIC FEET PER MINUTE
CFS	CUBIC FEET PER SECOND
CG	CONTAINER GROWN
CI	CAST IRON
CIP	CAST IRON PIPE
CIP CONC	CAST–IN–PLACE CONCRETE
CIT	CHANGE IN TYPE
CIV	CIVIL
CJ	CONTROL JOINT
CL	CLASS
C	CENTERLINE
CLD	CEMENT LINED DUCT, CONCRETE LOADING DOCK
CLDIP	CEMENT LINED DUCTILE IRON PIPE
CLF	CHAIN LINK FENCE
CMP	CORRUGATED METAL PIPE
CMU	CONCRETE MASONRY UNIT
CO	CLEAN–OUT, COUNTY
COL	COLUMN
COMM	COMMUNICATIONS
COMM/SIH	COMMUNICATION CENTER/ SIGNAL INSTALLATION HOUSE
CONC	CONCRETE
COND	CONDUIT
CONN	CONNECTOR, CONNECTION
CONST	CONSTRUCT, CONSTRUCTION
CONT	CONTINUE(D), CONTINUATION
CSO	COMBINED SEWER OVERFLOW
CSP	CORRUGATED STEEL PIPE
C TO C	CENTER TO CENTER
CTE	CONNECT TO EXISTING
CTR	CENTER
CULV	CULVERT
CY	CUBIC YARD
DCBCI	DOUBLE CATCH BASIN WITH CURB INLET
D	DIRECTIONAL PERCENTAGE OF DESIGN HOURLY VOLUME, DEGREE OF CURVE, DRAIN
DC	DIRECT CURRENT
DCB	DOUBLE CATCH BASIN
DDHV	DIRECTIONAL DESIGN HOURLY VOLUME
DELTA	DEGREE OF CURVE
DEMO	DEMOLITION
DEPT	DEPARTMENT
DHV	DESIGN HOURLY VOLUME
DI	DROP INLET
DIA OR ⌀	DIAMETER
DIAG	DIAGONAL, DIAGRAM
DIAPH	DIAPHRAGM
DIM	DIMENSION
DIP	DUCTILE IRON PIPE
DL	DEAD LOAD
DMH	DRAIN MANHOLE
DN	DOWN
DO	DITTO
DWG	DRAWING
DW	DRIVEWAY
E	EAST
EA	EACH
EB	ELECTRIC BOX
EBD	EASTBOUND
EF	EACH FACE
EGL	ENERGY GRADE LINE
EHH	ELECTRIC HANDHOLE
EJ	EXPANSION JOINT
EL	ELEVATION
ELBR	ELDERBERRY
ELEC	ELECTRICAL
EMH	ELECTRIC MANHOLE
ENGR	ENGINEER
ENT	ENTRANCE
EP	EDGE OF PAVEMENT
EQ	EQUAL
ES	EACH SIDE
EST	ESTIMATE
EXC	EXCAVATION
EXIST	EXISTING
EXP	EXPANSION
EXT	EXTERIOR, EXTERNAL
EW	EACH WAY
F	FAHRENHEIT (DEGREE)
FA	FIRE ALARM, FEDERAL AID
FB	FLOOR BEAM, FLAT BAR
FC	FIBER CONDUIT
FCM	FRACTURE CRITICAL MEMBER
F&C	FRAME AND COVER
FD	FIBER DUCT
FDN	FOUNDATION
FDR	FLOOR DRAIN
FF	FAR FACE
FG	FIBERGLASS
F&G	FRAME AND GRATE
FIN	FINISH
FL	FLOW LINE
FLR	FLOOR
FM	FORCE MAIN
FS	FIRE SIGNAL, FEDERAL SPECIFICATIONS
FSP	FIRE STANDPIPE
FT	FOOT, FEET
FTG	FOOTING
FVT	FIELD SHEAR VANE TEST
GA	GAUGE
GALV	GALVANIZED
GEN	GENERAL
GEOTECH	GEOTECHNICAL
GG	GAS GATE
GI	GUTTER INLET
GICI	GUTTER INLET WITH CURB INLET
GM	GAS METER
GP	GUARD POST
GRAN	GRANITE
GV	GAS VALVE
HC	ACCESSIBLE
HDWL	HEADWALL
HGL	HYDRAULIC GRADE LINE
HH	HANDHOLE
HI	HEIGHT OF INSTRUMENT
HMA	HOT MIX ASPHALT
HORIZ	HORIZONTAL
HP	HIGH POINT, HORSEPOWER, H–PILE
HSB	HIGH STRENGTH BOLT
HSS	HOLLOW STEEL SECTION
HT	HIGH TENSION, HEIGHT
HYD	HYDRANT
ID	INSIDE DIAMETER, IDENTIFICATION
IN	INCH
INT	INTERIOR, INTERNAL
INV	INVERT
IP	IRON PIPE
IR	IRON ROD
IT	INTERSECTION OF SLOPES OR PROFILE GRADE LINES
JCT	JUNCTION
JT	JOINT
K	RATIO OF DESIGN HOURLY VOLUME TO AVERAGE DAILY TRAFFIC, KIPS, RATE OF CHANGE OF VERTICAL CURVE
L	LENGTH
LAT	LATERAL
LB(S)	POUND(S)
LDSCP	LANDSCAPING
LF	LINEAR FEET
LL	LIVE LOAD
LOC	LOCATION, LOCAL
LP	LOW POINT, LIGHT POLE
LS	LOW SERVICE WATER
LT	LEFT
MASS	MASSACHUSETTS
MAX	MAXIMUM
MBTA	MASSACHUSETTS BAY TRANSPORTATION AUTHORITY
MC	METAL COVER
M/E	MECHANICAL AND ELECTRICAL
MECH	MECHANICAL
MG	METAL GRATE, MEGA GRAM
MH	MANHOLE
MHB	MASSACHUSETTS HIGHWAY BOUND
MHD	MASSACHUSETTS HIGHWAY DEPARTMENT
MHW	MEAN HIGH WATER
MIN	MINIMUM
MISC	MISCELLANEOUS
MKG	MARKING
MLW	MEAN LOW WATER
MPH	MILES PER HOUR
MSE	MECHANICALLY STABILIZED EARTH
MSL	MEAN SEA LEVEL
N	NORTH
NA	NOT ACCESSIBLE
N/A	NOT APPLICABLE
NAD	NORTH AMERICAN DATUM
NBD	NORTHBOUND
NF	NEAR FACE
N/F	NOW OR FORMERLY
NGVD	NATIONAL GEODETIC VERTICAL DATUM
NIC	NOT IN CONTRACT
NJB	NEW JERSEY BARRIER
NO OR #	NUMBER
NPT	NATIONAL PIPE THREAD
NPV	NO PIPES VISIBLE
NS	NEAR SIDE
NTS	NOT TO SCALE
OC	ON CENTER
OD	OUTSIDE DIAMETER
OG	ORIGINAL GROUND
OHW	OVERHEAD WIRES
OPP	OPPOSITE
OW	OBSERVATION WELL
PB	PULL BOX
PC	POINT OF CURVATURE
PCC	POINT OF COMPOUND CURVATURE
PCCP	PRESTRESSED CONCRETE CYLINDER PIPE
PCF	POUNDS PER CUBIC FOOT
PE	POLYETHYLENE, PROFESSIONAL ENGINEER
PERF	PERFORATED
PERM	PERMANENT
PGL	PROFILE GRADE LINE
PI	POINT OF INTERSECTION OF TANGENTS
PIV	POST INDICATOR VALVE
PJT	PARAFFIN JOINT
PKG	PARKING
PL	PLATE
ℙ	PROPERTY LINE
PM	PARKING METER
PPC	PRECAST PRESTRESSED CONCRETE
PPM	PARTS PER MILLION
PRC	POINT OF REVERSE CURVATURE
PREL	PRELIMINARY
PRIV	PRIVATE
PROJ	PROJECT
PROP	PROPOSED
PS	POLICE SIGNAL, PUMPING STATION (W/SYMBOL)
PSF	POUNDS PER SQUARE FOOT
PSI	POUNDS PER SQUARE INCH
PT	POINT, POINT OF TANGENCY
PVC	POLYVINYL CHLORIDE, POINT OF VERTICAL CURVATURE
PVI	POINT OF VERTICAL INTERSECTION
PVMT	PAVEMENT
PVT	POINT OF VERTICAL TANGENCY
PWW	PAVED WATER WAY
QTY	QUANTITY
RAD, R	RADIUS
RC	REINFORCED CONCRETE
RCB	REINFORCED CONCRETE BOX CULVERT
RCP	REINFORCED CONCRETE PIPE
RD	ROAD
RDWY	ROADWAY
REC	RECORD
REINF	REINFORCE, REINFORCING, REINFORCEMENT
REL	RELOCATE, RELOCATED
REM	REMOVE
REQD	REQUIRED
RET	RETAIN, RETAINING
REV	REVISION, REVISED
RGS	RIGID GALVANIZED STEEL
RMDL	REMODEL
ROW	RIGHT–OF–WAY
RRP	RIPRAP
R&R	REMOVE AND RESET
R&S	REMOVE AND STACK
RT	RIGHT
RTE	ROUTE
S	SOUTH, SLOPE, SIGN SANITARY
SB	SPECIAL BORROW, STONE BOUND
SBC	STONE BOX CULVERT
SBD	SOUTHBOUND
SCPR	SCUPPER
SD	STANDARD DRAWING, STORM DRAIN
SE	SUPER ELEVATION
SF	SQUARE FEET
SH	SHEET
SHLD	SHOULDER
SHLL	STATE HIGHWAY LAYOUT LINE
SHLO	STATE HIGHWAY LAYOUT
SI	SQUARE INCH
SIM	SIMILAR
SIP	STAY–IN–PLACE FORMS
SK	SKETCH, SKEW, SHEAR KEY
SL	SURVEY LINE
SMH	SEWER MANHOLE
SP	STEEL PIPE OR STATIC PRESSURE
SPEC(S)	SPECIFICATION(S)
SPT	STANDARD PENETRATION TEST
SQ	SQUARE
SS	SANITARY SEWER, STAINLESS STEEL
SSMH	SANITARY SEWER MANHOLE
SST	STAINLESS STEEL
ST	STEAM, STREET
STA	STATION
STD	STANDARD
STL	STEEL
SUB	SUBMITTED, SUBSTRUCTURE
SURF	SURFACE, SURFACING
SW	SIDEWALK
SWR	SIDEWALK RAMP
SY	SQUARE YARD
SYM	SYMMETRICAL
T	PERCENTAGE OF TRUCKS, TON, TANGENT
TAN	TANGENT
T&B	TOP & BOTTOM
TBR	TO BE RELOCATED
TCB	TRAFFIC CONTROL BOX
TEL	TELEPHONE
TEMP	TEMPERATURE, TEMPORARY
THRU	THROUGH
TMH	TELEPHONE MANHOLE
TOC	TOP OF CONCRETE, TOP OF CURB
TOF	TOP OF FOOTING
TOG	TOP OF GRATE
TOP	TOP OF PIPE
TOPO	TOPOGRAPHY
TOR	TOP OF RAIL
TOS	TOP OF STEEL
TOW	TOP OF WALL
TP	TURNING POINT
TR SIG COND	TRAFFIC SIGNAL CONDUIT
TRANS	TRANSITION
TRD	TREAD
TRWY	TRAVELED WAY
TS	TRAFFIC SIGNAL, TUBE STEEL
TSC	TRAFFIC SURVEILLANCE AND CONTROL
TTY	TEXT TELEPHONE
TV	TELEVISION (CABLE)
TVM	TICKET VENDING MACHINE
TVMH	TELEVISION MANHOLE (CABLE)
TVP	TOP OF VERTICAL PIPE
TYP	TYPICAL
UD	UNDERDRAIN
UP	UTILITY POLE
ULT	ULTIMATE
UNO	UNLESS NOTED OTHERWISE
UTIL	UTILITIES
VAR	VARIES, VARIABLE
VCP	VITRIFIED CLAY PIPE
VERT	VERTICAL
VG	VARIABLE GRAVEL
VM	VALVE METER
VMS	VARIABLE MESSAGE SIGN
VOL	VOLUME
W	WEST, WATER, WIDE FLANGE STEEL
w/	WITH
WBD	WESTBOUND
WE	WATER ELEVATION
WG	WATER GATE
WIP	WROUGHT IRON PIPE
WM	WATER METER, WATER MAIN
WMH	WATER MANHOLE
w/o	WITHOUT
WP	WOOD POST, WORKING POINT, WATERPROOF(ING)
WPM	WATERPROOFING MEMBRANE
WS	WATERSTOP
WT	WIDE FLANGE STEEL CUT
WSP	WELDED STEEL PIPE
WV	WATER VALVE
WWF	WELDED WIRE FABRIC
WCR	WHEELCHAIR RAMP
WQS	WATER QUALITY STRUCTURE
X–SECT	CROSS–SECTION
YD	YARD
YR	YEAR

90% SUBMITTAL
NOT FOR CONSTRUCTION

MASSACHUSETTS BAY TRANSPORTATION AUTHORITY

FITCHBURG COMMUTER RAIL LINE
IMPROVEMENT PROJECT
CONTRACT NO. G67PS01

SOUTH ACTON STATION
ABBREVIATIONS

ISSUE	DATE	DESCRIPTION	BY	CHKD.	APP.

PROJECT MANAGER Date

HNTB
300 APOLLO DRIVE
CHELMSFORD, MA 01824
(978) 905–4000

MASSACHUSETTS BAY TRANSPORTATION AUTHORITY
APPROVED BY:
PROJECT MANAGER Date

Lozano, Baskin, and Associates, Inc.
Architecture•Urban Design•City Planning
205 Mt. Auburn St. Watertown, MA 02472

	DES. BY	DR. BY	CHK. BY
HORIZ: N/A	MB	DW	MB
VERT: N/A	DW		
DATE: 09/08/11			

PLAN NO. 169482
SHEET A–0.2
ISSUE

FILE NAME: W:\DwgFiles\0814 Fitchburg Main Line\0814.01_So. Acton Station\7.0 Design Development\60% Submission\7.1 Dwg\ 00 A–ABREV.dwg
PLOT DATE: Sep 02, 2011 – 8:08am

EAST TO BOSTON

WEST TO FITCHBURG

TOWN OF ACTON

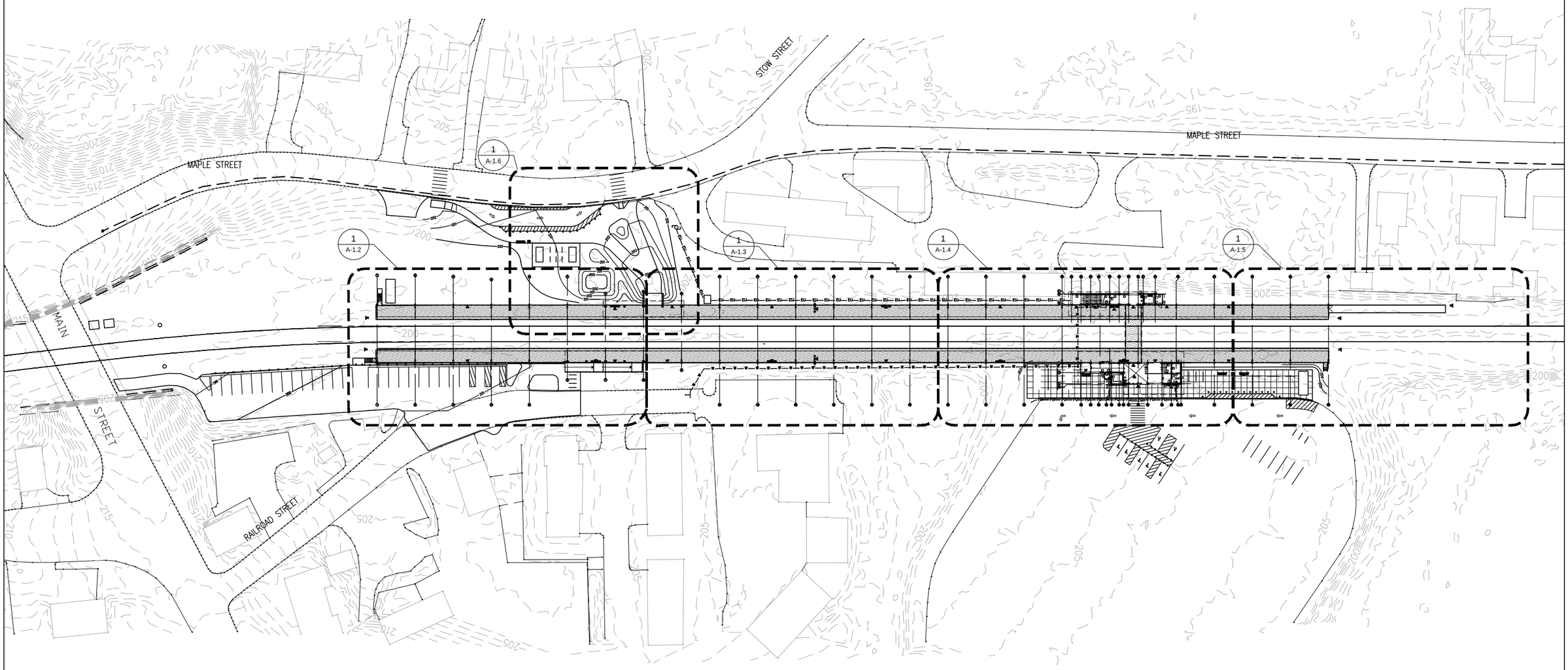

1 SITE PLAN
1:500

PROJECT NORTH

0 250 500 1000

SCALE: 1:500

90% SUBMITTAL
NOT FOR CONSTRUCTION

FILE NAME: C:\Documents and Settings\Mackintosh LBA\Local settings\Temp\AcPublish_1604\ 00 A-SP0001.dwg
PLOT DATE: Sep 02, 2011 - 8:09am

ISSUE	DATE	DESCRIPTION	BY	CHKD.	APP.

MASSACHUSETTS BAY TRANSPORTATION AUTHORITY

FITCHBURG COMMUTER RAIL LINE
IMPROVEMENT PROJECT
CONTRACT NO. G67PS01

SOUTH ACTON STATION
SITE KEY PLAN

HNTB
300 APOLLO DRIVE
CHELMSFORD, MA 01824
(978) 905-4000

Lozano, Baskin, and Associates, Inc.
Architecture • Urban Design • City Planning
205 Mt. Auburn St. Watertown, MA 02472

MASSACHUSETTS BAY TRANSPORTATION AUTHORITY
APPROVED BY:

PROJECT MANAGER Date

PROJECT MANAGER Date

HORIZ: N/A	DES. BY	DR. BY	CHK. BY	PLAN NO.	ISSUE
VERT: N/A	MB DW	DW	MB		
DATE: 09/08/11				SHEET A-1.1	

EAST TO BOSTON

WEST TO FITCHBURG

TOWN OF ACTON

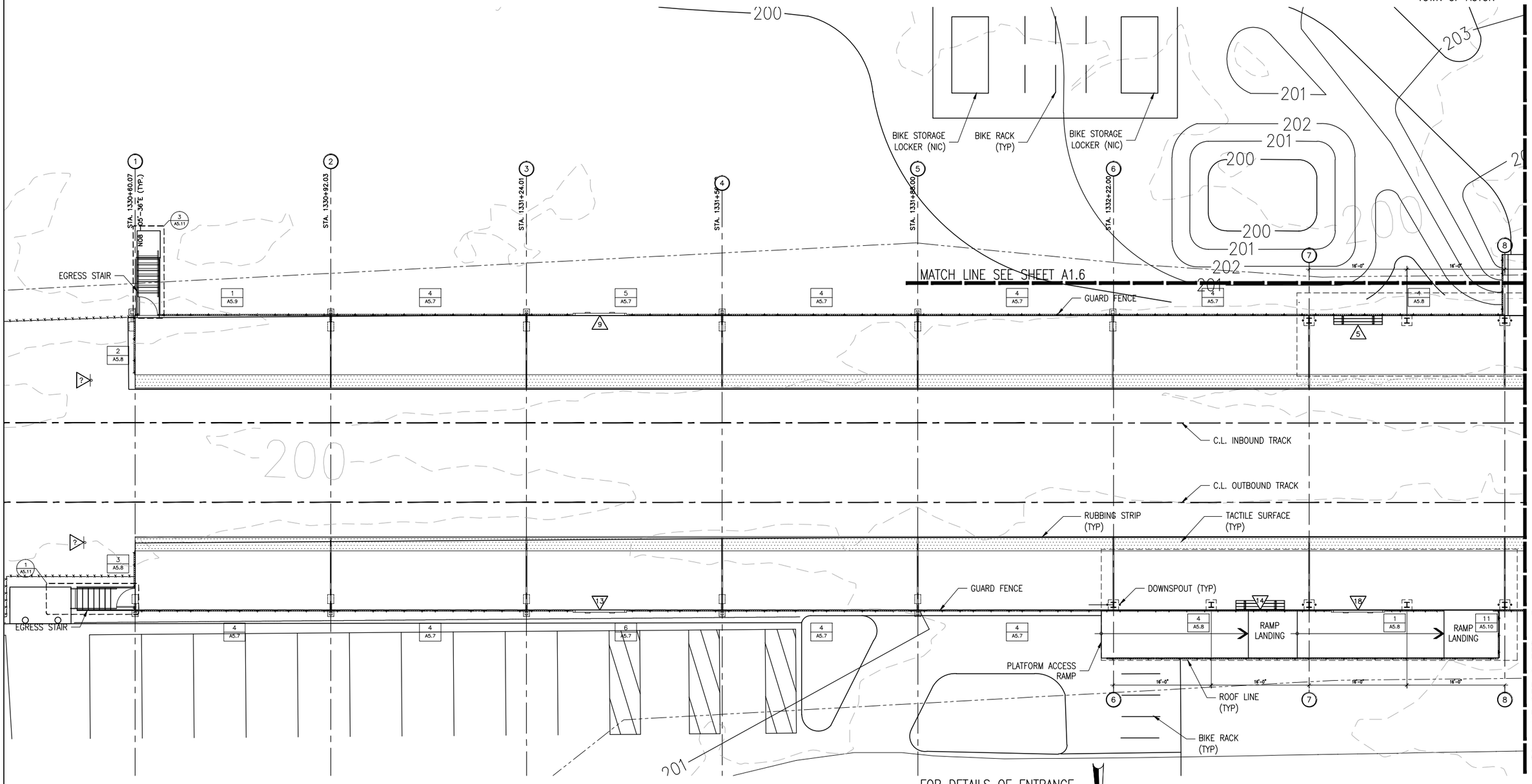

1 ENLARGED SITE PLAN
1/8"=1'-0"

FOR DETAILS OF ENTRANCE AREA SEE SHEET C-14

PROJECT NORTH

SCALE: 1/4"=1'-0"

90% SUBMITTAL
NOT FOR CONSTRUCTION

MASSACHUSETTS BAY TRANSPORTATION AUTHORITY

FITCHBURG COMMUTER RAIL LINE
IMPROVEMENT PROJECT
CONTRACT NO. G67PS01

SOUTH ACTON STATION ENLARGED SITE PLAN

ISSUE	DATE	DESCRIPTION	BY	CHKD.	APP.

HNTB
300 APOLLO DRIVE
CHELMSFORD, MA 01824
(978) 905-4000

MASSACHUSETTS BAY TRANSPORTATION AUTHORITY
APPROVED BY:
PROJECT MANAGER Date

Lozano, Baskin, and Associates, Inc.
Architecture•Urban Design•City Planning
205 Mt. Auburn St. Watertown, MA 02472

	DES. BY	DR. BY	CHK. BY	
HORIZ: N/A	MB	DW	MB	PLAN NO.
VERT: N/A				ISSUE
DATE: 09/08/11				SHEET A-1.2

FILE NAME: C:\Documents and Settings\Mackintosh LBA\local settings\temp\AcPublish_2040\ 00 A-SP0002.dwg
PLOT DATE: Sep 07, 2011 - 9:35am

EAST TO BOSTON

WEST TO FITCHBURG

TOWN OF ACTON

STA. 1333+48.00

STA. 1333+80.00

STA. 1334+12.00

STA. 1334+44.00

STA. 1334+76.00

STA. 1335+08.00

PLATFORM ACCESS WALKWAY

DOWNSPOUT

ROOF LINE (TYP)

GUARD FENCE

C.L. INBOUND TRACK

C.L. OUTBOUND TRACK

RUBBING STRIP (TYP)

TACTILE SURFACE (TYP)

GUARD FENCE

MATCH LINE SEE SHEET A1.2

MATCH LINE SEE SHEET A1.4

1 ENLARGED SITE PLAN
1/8"=1'-0"

PROJECT NORTH

SCALE: 1/4"=1'-0"

90% SUBMITTAL
NOT FOR CONSTRUCTION

FILE NAME: C:\Documents and Settings\Mackintosh LBA\Local settings\Temp\AcPublish_1604\ 00 A-SP0002.dwg
PLOT DATE: Sep 02, 2011 - 8:09am

ISSUE	DATE	DESCRIPTION	BY	CHKD.	APP.

Lozano, Baskin, and Associates, Inc.
Architecture • Urban Design • City Planning
205 Mt. Auburn St. Watertown, MA 02472

MASSACHUSETTS BAY TRANSPORTATION AUTHORITY

FITCHBURG COMMUTER RAIL LINE
IMPROVEMENT PROJECT
CONTRACT NO. G67PS01

SOUTH ACTON STATION
ENLARGED
SITE PLAN

HNTB
300 APOLLO DRIVE,
CHELMSFORD, MA 01824
(978) 905-4000

MASSACHUSETTS BAY TRANSPORTATION AUTHORITY

APPROVED BY:

PROJECT MANAGER Date

PROJECT MANAGER Date

	DES. BY	DR. BY	CHK. BY
HORIZ: N/A	MB	DW	MB
VERT: N/A	DW		
DATE: 09/08/11			

PLAN NO.

SHEET A-1.3

ISSUE

EAST TO BOSTON

WEST TO FITCHBURG

TOWN OF ACTON

STA. 1335+40.00 | STA. 1335+72.00 | STA. 1336+04.00 | STA. 1336+36.00 | STA. 1336+68.00 | STA. 1337+00.00 | STA. 1337+32.00 | STA. 1337+64.00

GUARD FENCE

C.L. INBOUND TRACK

C.L. OUTBOUND TRACK

C.L. INBOUND TRACK

C.L. OUTBOUND TRACK

LINE OF BRIDGE ABOVE (TYP)

RUBBING STRIP (TYP)

TACTILE SURFACE (TYP)

GUARD FENCE

BIKE STORAGE LOCKER (NIC)

BIKE RACK (TYP)

BIKE STORAGE LOCKER (NIC)

SIGN

ROOF LINE (TYP)

BIKE RACK (TYP)

MATCH LINE SEE SHEET A1.3

MATCH LINE SEE SHEET A1.5

FOR DETAILS OF DROP OFF AREA SEE SHEET C-15

1 ENLARGED SITE PLAN
1/8"=1'-0"

PROJECT NORTH

SCALE: 1/4"=1'-0"

90% SUBMITTAL
NOT FOR CONSTRUCTION

FILE NAME: C:\Documents and Settings\Mackintosh LBA\local settings\temp\AcPublish_2040\ 00 A-SP0002.dwg
PLOT DATE: Sep 07, 2011 - 9:35am

MASSACHUSETTS BAY TRANSPORTATION AUTHORITY

FITCHBURG COMMUTER RAIL LINE
IMPROVEMENT PROJECT
CONTRACT NO. G67PS01

SOUTH ACTON STATION ENLARGED SITE PLAN

ISSUE	DATE	DESCRIPTION	BY	CHKD.	APP.

HNTB
300 APOLLO DRIVE
CHELMSFORD, MA 01824
(978) 905-4000

PROJECT MANAGER Date

MASSACHUSETTS BAY TRANSPORTATION AUTHORITY

APPROVED BY:

PROJECT MANAGER Date

Lozano, Baskin, and Associates, Inc.
Architecture • Urban Design • City Planning
205 Mt. Auburn St. Watertown, MA 02472

HORIZ: N/A	DES. BY	DR. BY	CHK. BY	PLAN NO.	ISSUE
VERT: N/A	MB DW	DW	MB		
DATE: 09/08/11				SHEET A-1.4	

EAST TO BOSTON

WEST TO FITCHBURG

TOWN OF ACTON

STA. 1337+96.00 (24)

STA. 1338+28.00 (25)

STA. 1338+60.00 (26)

5 A5.7 — GUARD FENCE

4 A5.7

4 A5.7

5 A5.11

9

2 A5.9

7

EGRESS WALKWAY

EGRESS WALKWAY GUARD FENCE

C.L. INBOUND TRACK

C.L. OUTBOUND TRACK

RUBBING STRIP (TYP)

TACTILE SURFACE (TYP)

7

2 A5.8

14

6 A5.7 — GUARD FENCE

4 A5.7

1 A5.9

TRASH RECEPTICAL

BIKE STORAGE LOCKER (NIC)

EGRESS STAIR

2 A5.11

5

BENCH/WINDSCREEN

204

205

MATCH LINE SEE SHEET A1.4

FOR DETAILS OF DROP OFF AREA SEE SHEET C-15

1 ENLARGED SITE PLAN
1/8"=1'-0"

PROJECT NORTH

0 4 8 16

SCALE: 1/4"=1'-0"

90% SUBMITTAL
NOT FOR CONSTRUCTION

FILE NAME: C:\Documents and Settings\Mackintosh LBA\local settings\temp\AcPublish_2040\ 00 A-SP0002.dwg
PLOT DATE: Sep 07, 2011 - 9:35am

ISSUE	DATE	DESCRIPTION	BY	CHKD.	APP.

Lozano, Baskin, and Associates, Inc.
Architecture • Urban Design • City Planning
205 Mt. Auburn St. Watertown, MA 02472

HNTB
300 APOLLO DRIVE
CHELMSFORD, MA 01824
(978) 905-4000

PROJECT MANAGER Date

MASSACHUSETTS BAY TRANSPORTATION AUTHORITY

APPROVED BY:

PROJECT MANAGER Date

MASSACHUSETTS BAY TRANSPORTATION AUTHORITY

FITCHBURG COMMUTER RAIL LINE
IMPROVEMENT PROJECT
CONTRACT NO. G67PS01

SOUTH ACTON STATION ENLARGED SITE PLAN

HORIZ: N/A	DES. BY	DR. BY	CHK. BY	PLAN NO.	ISSUE
VERT: N/A	MB DW	DW	MB		
DATE: 09/08/11				SHEET A-1.5	

EAST TO BOSTON

WEST TO FITCHBURG

TOWN OF ACTON

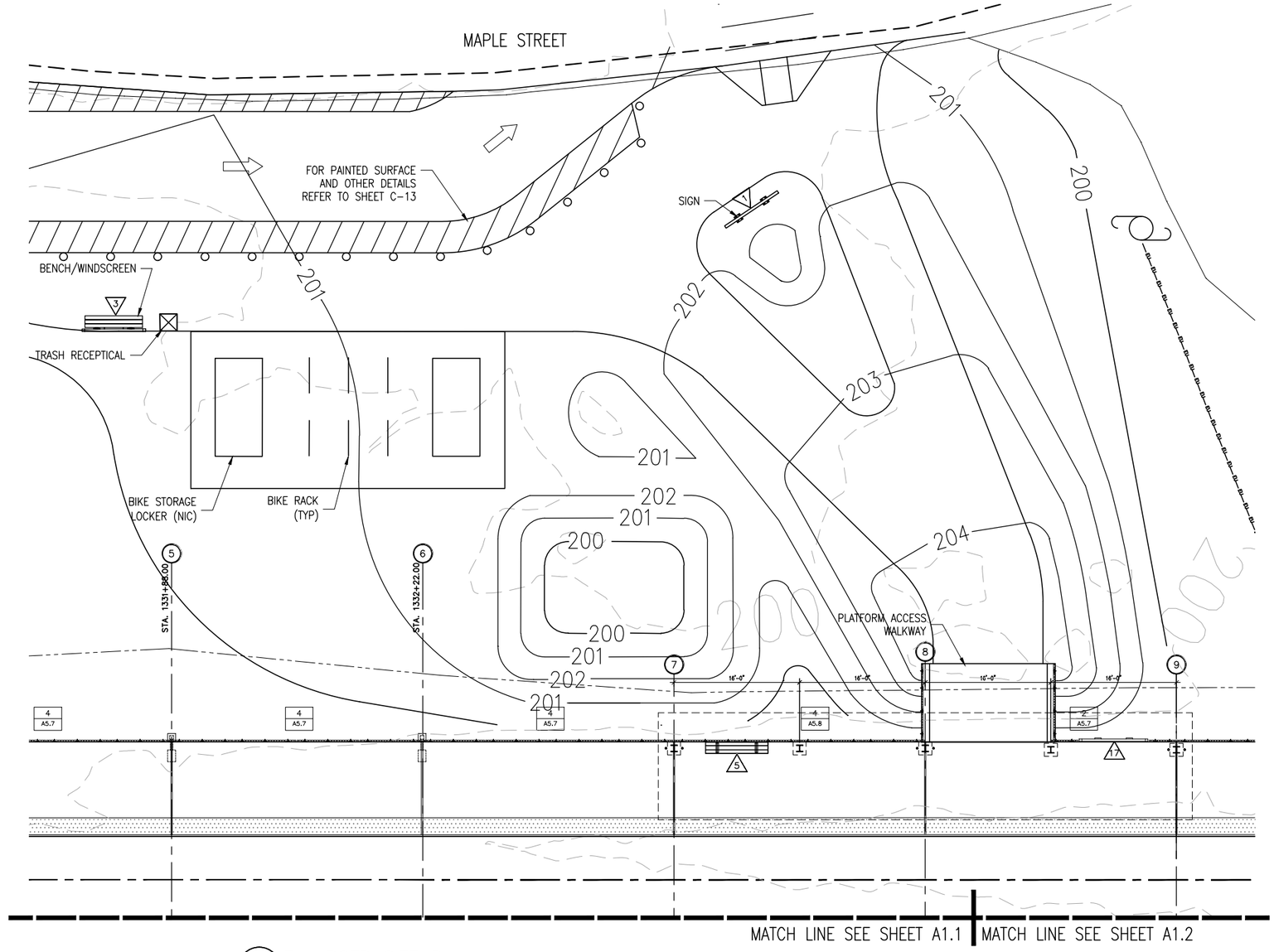

1 ENLARGED SITE PLAN
1/8"=1'-0"

PROJECT NORTH

0 4 8 16

SCALE: 1/4"=1'-0"

90% SUBMITTAL
NOT FOR CONSTRUCTION

MASSACHUSETTS BAY TRANSPORTATION AUTHORITY

FITCHBURG COMMUTER RAIL LINE
IMPROVEMENT PROJECT
CONTRACT NO. G67PS01

SOUTH ACTON STATION
ENLARGED
SITE PLAN

ISSUE	DATE	DESCRIPTION	BY	CHKD.	APP.

HNTB
300 APOLLO DRIVE
CHELMSFORD, MA 01824
(978) 905-4000

MASSACHUSETTS BAY TRANSPORTATION AUTHORITY
APPROVED BY:
PROJECT MANAGER Date

PROJECT MANAGER Date

Lozano, Baskin, and Associates, Inc.
Architecture•Urban Design•City Planning
205 Mt. Auburn St. Watertown, MA 02472

HORIZ: N/A
VERT: N/A
DATE: 09/08/11

DES. BY	DR. BY	CHK. BY
MB DW	DW	MB

PLAN NO.
SHEET A-1.6
ISSUE

FILE NAME: C:\Documents and Settings\Mackintosh LBA\local settings\temp\AcPublish_2040\ 00 A-SP0002.dwg
PLOT DATE: Sep 07, 2011 - 9:36am

EAST TO BOSTON

MATCH LINE SEE SHEET A2.2

WEST TO FITCHBURG

TOWN OF ACTON

℄ OUTBOUND TRACK 1

1 A3.2

LINE OF BRIDGE ABOVE

WOOD RUBBING STRIP

TACTILE WARNING STRIP

ROOF LINE ABOVE

LIGHT FIXTURE ABOVE

PROTECTIVE SCREEN SYSTEM (TYP THIS WALL)

PLATFORM GUARD FENCE

RAMP HANDRAIL EACH SIDE

PLATFORM

PLATFORM

STAIR HANDRAIL

PLATFORM GUARD FENCE

PROTECTIVE SCREEN SYSTEM

RAMP LANDING AT PLATFORM LEVEL ◆206.47

1 A-4.1

8'-0"

UP ◆205.25

LOBBY

STAIR HANDRAIL (TYP)

FLOOR DRAIN

STAIR LANDING AT PLATFORM LEVEL

UP ◆206.64

UP 206.69

MBTA ELECT. ROOM

METAL CLADDING (TYP)

2X2 STEEL TUBE FRAMING (TYP)

8" CMU WALL

DOWNSPOUT (TYP)

PROTECTIVE SCREEN (TYP THIS WALL)

ELEV MACH RM

PIT LADDER

ELEV. ○ Kone Min. Shaft Clearance

CMU WALL

STAIR GUARD FENCE AND HANDRAIL

◆205.25

ACCESS PANEL

UP

2'-7"

COMM ROOM

FLOOR DRAIN

HSS 4X4 (TYP AT ELEV. MACH ROOM)

BIKE RACK (TYP)

HSS COLUMN (TYP) SEE STRUCTURAL DRAWINGS

ROOF LINE ABOVE

STEEL WINDOW SYSTEM (TYP AT ELEVATOR SHAFT)

◆205.25 ◆205.25

PROTECTIVE SCREEN SYSTEM

BIKE RACKS (TYP)

16'-0" 8'-0" 8'-0" 8'-0" 6'-4" 4'-0" 4'-0" 8'-0" 8'-0" 12'-0" 8'-0" 4'-0" 4'-0"

19 19.2 19.3 20 20.1 20.2 20.3 20.4 20.6 21 21.3 21.5 21.6 22 22.1

CURB LINE (TYP) SEE SITE PLAN SHEET C-15

FOR 12'-0" CROSSWALK AND OTHER DROP OFF AREA DETAILS SEE SITE PLAN SHEET C-15

1 A3.1

1 PLAN DETAIL
1/4" = 1'-0"

PROJECT NORTH

0 2 4 8

SCALE: 1/4" = 1'-0"

90% SUBMITTAL
NOT FOR CONSTRUCTION

ISSUE	DATE	DESCRIPTION	BY	CHKD.	APP.

Lozano, Baskin, and Associates, Inc.
Architecture•Urban Design•City Planning
205 Mt. Auburn St. Watertown, MA 02472

MASSACHUSETTS BAY TRANSPORTATION AUTHORITY

FITCHBURG COMMUTER RAIL LINE
IMPROVEMENT PROJECT
CONTRACT NO. G67PS01

SOUTH ACTON STATION
FIRST FLOOR PLAN
OUTBOUND HEAD HOUSE

HNTB
300 APOLLO DRIVE
CHELMSFORD, MA 01824
(978) 905-4000

MASSACHUSETTS BAY TRANSPORTATION AUTHORITY
APPROVED BY:
PROJECT MANAGER Date

HORIZ: N/A	DES. BY	DR. BY	CHK. BY	PLAN NO.	ISSUE
VERT: N/A	MB DW	DW	MB		
DATE: 09/08/11				SHEET A-2.1	

FILE NAME: C:\Documents and Settings\Mackintosh LBA\local settings\temp\AcPublish_2040\ 01 A-FP0001 w elevator revision.dwg
PLOT DATE: Sep 07, 2011 - 9:50am

EAST TO BOSTON

WEST TO FITCHBURG

TOWN OF ACTON

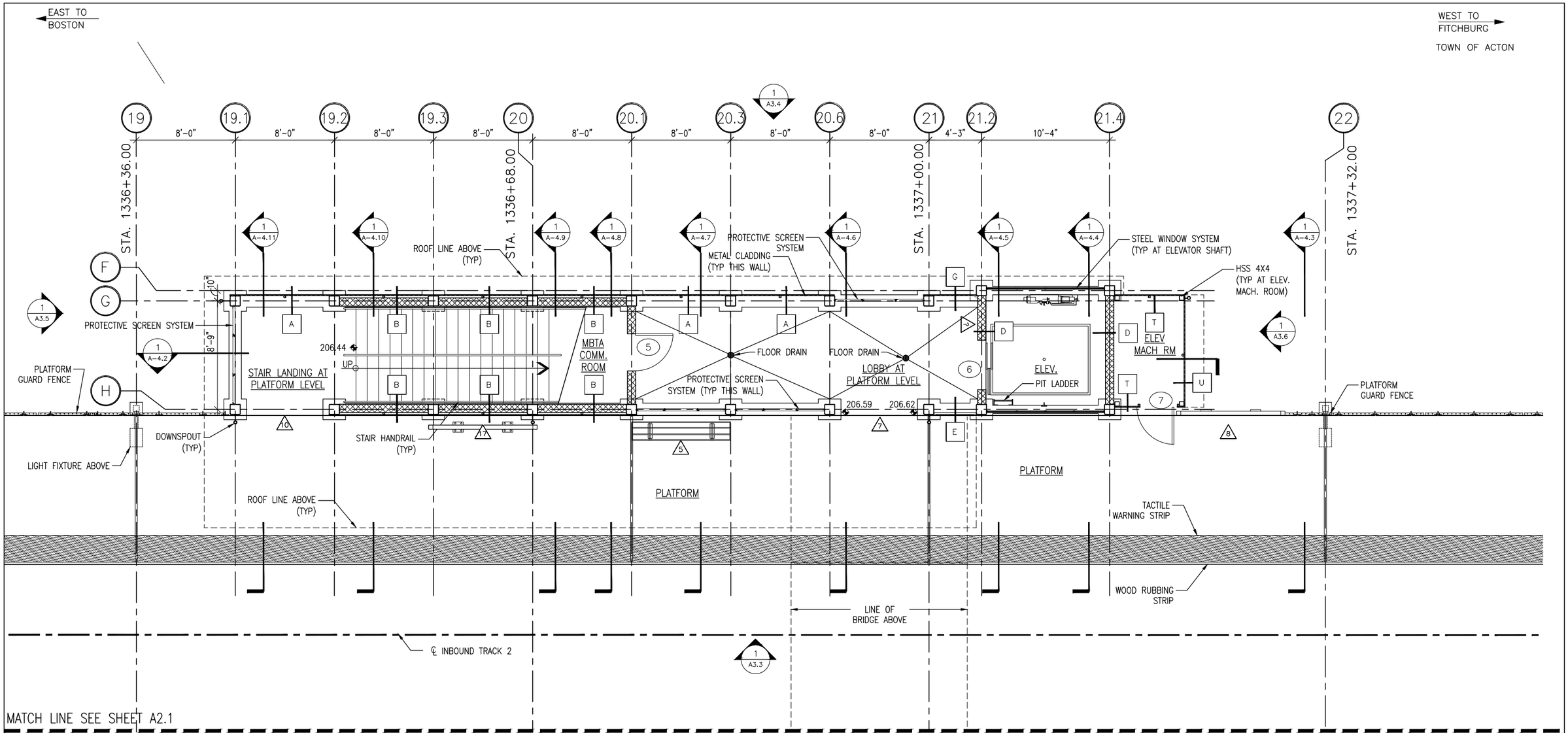

MATCH LINE SEE SHEET A2.1

1 PLAN DETAIL
1/4" = 1'-0"

PROJECT NORTH

0 2 4 8

SCALE: 1/4" = 1'-0"

90% SUBMITTAL
NOT FOR CONSTRUCTION

ISSUE	DATE	DESCRIPTION	BY	CHKD.	APP.

Lozano, Baskin, and Associates, Inc.
Architecture•Urban Design•City Planning
205 Mt. Auburn St. Watertown, MA 02472

MASSACHUSETTS BAY TRANSPORTATION AUTHORITY

FITCHBURG COMMUTER RAIL LINE
IMPROVEMENT PROJECT
CONTRACT NO. G67PS01

SOUTH ACTON STATION
FIRST FLOOR PLAN
INBOUND HEAD HOUSE

HNTB
300 APOLLO DRIVE
CHELMSFORD, MA 01824
(978) 905-4000

PROJECT MANAGER Date

MASSACHUSETTS BAY TRANSPORTATION AUTHORITY

APPROVED BY:

PROJECT MANAGER Date

HORIZ: N/A	DES. BY	DR. BY	CHK. BY	PLAN NO.	ISSUE
VERT: N/A	MB	DW	MB		
DATE: 09/08/11	DW			SHEET A-2.2	

FILE NAME: C:\Documents and Settings\Mackintosh LBA\local settings\temp\AcPublish_1500\ 01 A-FP0001 w elevator revision.dwg
PLOT DATE: Sep 02, 2011 - 10:45am

EAST TO BOSTON

WEST TO FITCHBURG

TOWN OF ACTON

MATCH LINE SEE SHEET A2.4

℄ OUTBOUND TRACK 1

1 A3.2

5

STEEL WINDOW SYSTEM (TYP AT BRIDGE AND BRIDGE ENDS)

PROTECTIVE SCREEN (TYP AT BRIDGE AND BRIDGE ENDS)

EDGE OF PLATFORM BELOW

HP LP HP

BRIDGE (224.43')

HP LP

STEEL WINDOW SYSTEM METAL CLADDING (TYP)

LP

J

P

GUARD FENCE

STAIR LANDING AT PLATFORM LEVEL BELOW

212.48

UP

STAIR HANDRAIL (TYP)

1 A-4.1

K

UP

M

UPPER LOBBY

STAIR LANDING

METAL ROOF BELOW (TYP)

HP

ELEV.

9

UP

UP

1 A3.5

STAIR HANDRAIL (TYP)

217.15

212.48

224.43

STAIR LANDING

1 A3.6

D

?

L

M

LP HP LP

K

N

LP

1 A-4.11

1 A-4.10

1 A-4.9

1 A-4.8

1 A-4.7

STEEL WINDOW SYSTEM (TYP AT ELEVATOR SHAFT)

HP LP HP LP

1 A-4.6

1 A-4.5

1 A-4.4

1 A-4.3

STEEL WINDOW SYSTEM METAL CLADDING (TYP) 12'-0"

8'-0" 8'-0" 2'-3" 8'-0" 2'-3" 8'-0" 4'-0" 4'-0"

19 19.2 19.3 20 20.1 20.2 20.3 20.4 20.6 21 21.3 21.5 21.6 22 22.1

1 A3.1

1 PLAN DETAIL
1/4" = 1'-0"

N

PROJECT NORTH

0 2 4 8

SCALE: 1/4" = 1'-0"

90% SUBMITTAL
NOT FOR CONSTRUCTION

ISSUE	DATE	DESCRIPTION	BY	CHKD.	APP.

Lozano, Baskin, and Associates, Inc.
Architecture•Urban Design•City Planning
205 Mt. Auburn St. Watertown, MA 02472

MASSACHUSETTS BAY TRANSPORTATION AUTHORITY

FITCHBURG COMMUTER RAIL LINE
IMPROVEMENT PROJECT
CONTRACT NO. G67PS01

SOUTH ACTON STATION
SECOND FLOOR PLAN
OUTBOUND HEAD HOUSE

HNTB
300 APOLLO DRIVE
CHELMSFORD, MA 01824
(978) 905-4000

MASSACHUSETTS BAY TRANSPORTATION AUTHORITY

APPROVED BY:

PROJECT MANAGER Date

PROJECT MANAGER Date

HORIZ: N/A	DES. BY	DR. BY	CHK. BY	PLAN NO.	ISSUE
VERT: N/A	MB DW	DW	MB		
DATE: 09/08/11				SHEET A-2.3	

FILE NAME: C:\Documents and Settings\Mackintosh LBA\local settings\temp\AcPublish_1500\ 01 A-FP0001 w elevator revision.dwg
PLOT DATE: Sep 02, 2011 - 10:43am

EAST TO BOSTON

WEST TO FITCHBURG

TOWN OF ACTON

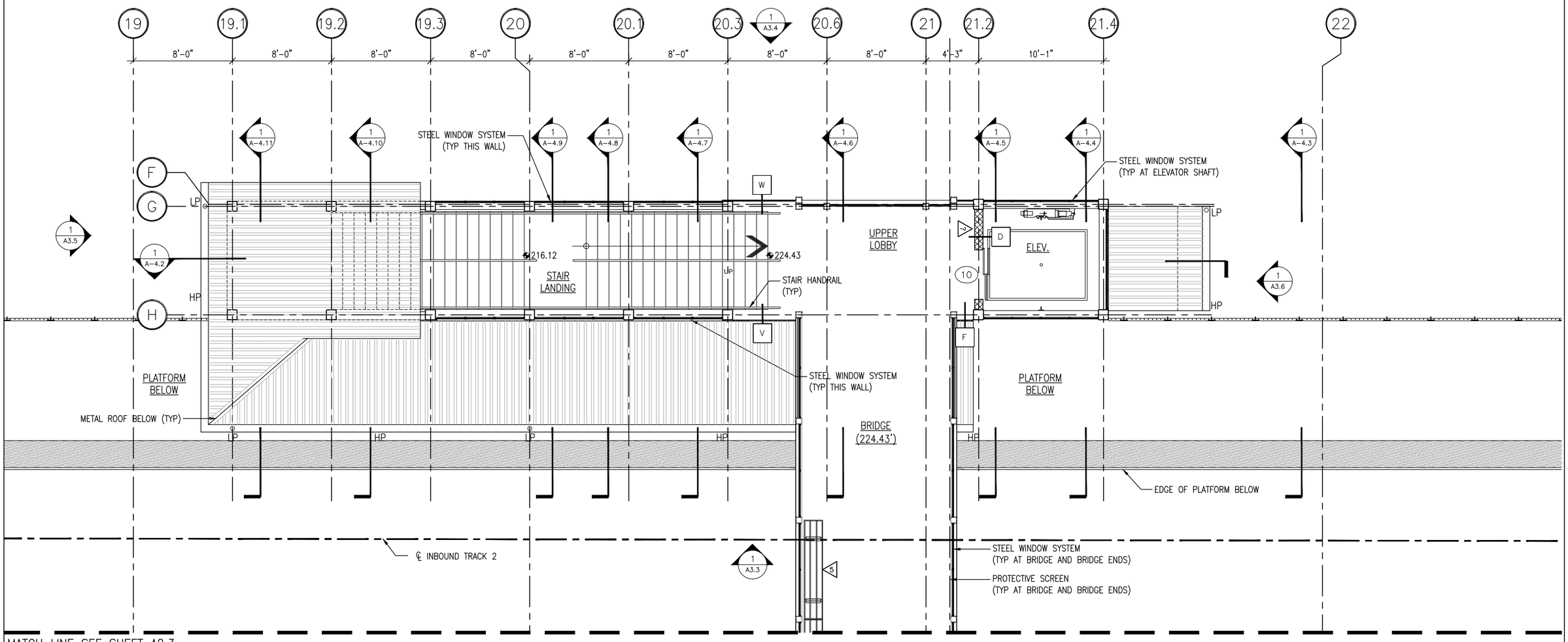

MATCH LINE SEE SHEET A2.3

1 PLAN DETAIL
1/4" = 1'-0"

PROJECT NORTH

SCALE: 1/4" = 1'-0"

90% SUBMITTAL
NOT FOR CONSTRUCTION

FILE NAME: C:\Documents and Settings\Mackintosh LBA\Local settings\temp\AcPublish_1500\ 01 A-FP0001 w elevator revision.dwg
PLOT DATE: Sep 02, 2011 - 10:43am

ISSUE	DATE	DESCRIPTION	BY	CHKD.	APP.

Lozano, Baskin, and Associates, Inc.
Architecture • Urban Design • City Planning
205 Mt. Auburn St. Watertown, MA 02472

HNTB
300 APOLLO DRIVE
CHELMSFORD, MA 01824
(978) 905-4000

PROJECT MANAGER Date

MASSACHUSETTS BAY TRANSPORTATION AUTHORITY

APPROVED BY:

PROJECT MANAGER Date

MASSACHUSETTS BAY TRANSPORTATION AUTHORITY

FITCHBURG COMMUTER RAIL LINE
IMPROVEMENT PROJECT
CONTRACT NO. G67PS01

SOUTH ACTON STATION
SECOND FLOOR PLAN
INBOUND HEAD HOUSE

HORIZ: N/A	DES. BY	DR. BY	CHK. BY	PLAN NO.	ISSUE
VERT: N/A	MB DW	DW	MB		
DATE: 09/08/11				SHEET A-2.4	

EAST TO BOSTON

WEST TO FITCHBURG

TOWN OF ACTON

MATCH LINE SEE SHEET A2.6

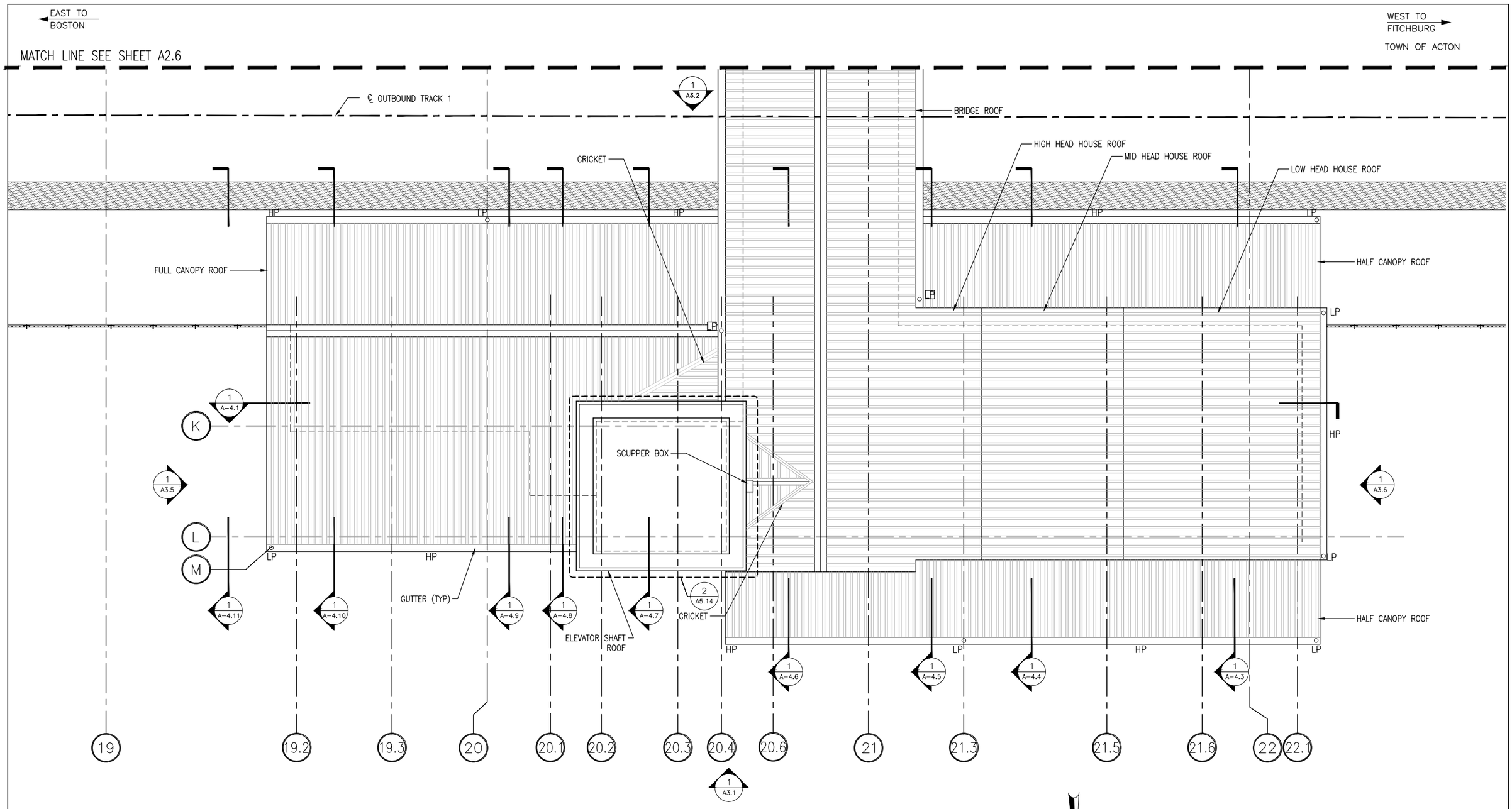

1 ROOF PLAN
1/4" = 1'-0"

PROJECT NORTH

0 2 4 8

SCALE: 1/4" = 1'-0"

90% SUBMITTAL
NOT FOR CONSTRUCTION

ISSUE	DATE	DESCRIPTION	BY	CH'KD.	APP.

PROJECT MANAGER Date

Lozano, Baskin, and Associates, Inc.
Architecture•Urban Design•City Planning
205 Mt. Auburn St. Watertown, MA 02472

HNTB
300 APOLLO DRIVE
CHELMSFORD, MA 01824
(978) 905-4000

MASSACHUSETTS BAY TRANSPORTATION AUTHORITY

APPROVED BY:

PROJECT MANAGER Date

MASSACHUSETTS BAY TRANSPORTATION AUTHORITY

FITCHBURG COMMUTER RAIL LINE
IMPROVEMENT PROJECT
CONTRACT NO. G67PS01

SOUTH ACTON STATION
ROOF PLAN
OUTBOUND HEAD HOUSE

HORIZ: N/A	DES. BY	DR. BY	CHK. BY	PLAN NO.	ISSUE
VERT: N/A	MB DW	DW	MB		
DATE: 09/08/11				SHEET A-2.5	

FILE NAME: C:\Documents and Settings\Mackintosh LBA\local settings\temp\AcPublish_1500\ 01 A-FP0001 w elevator revision.dwg
PLOT DATE: Sep 02, 2011 - 10:44am

EAST TO BOSTON

WEST TO FITCHBURG

TOWN OF ACTON

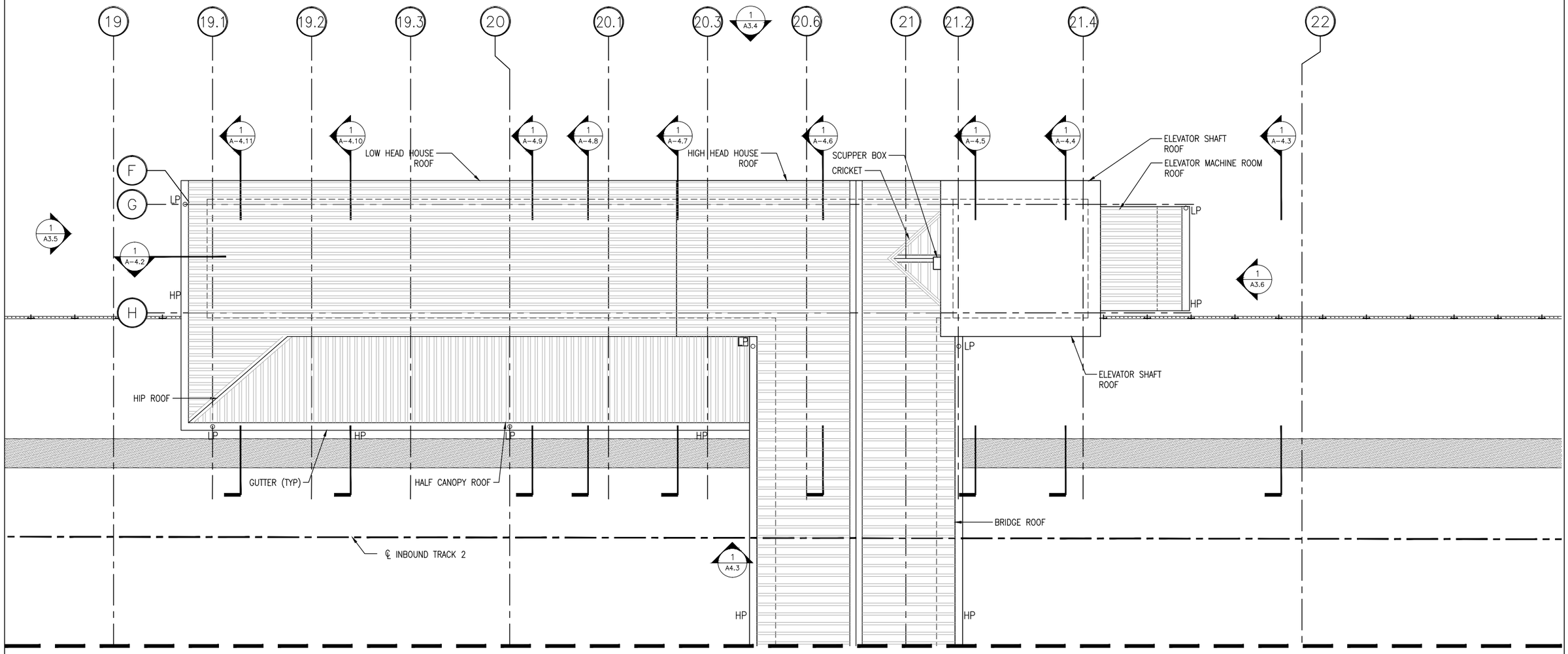

MATCH LINE SEE SHEET A2.5

1 ROOF PLAN
1/4" = 1'-0"

PROJECT NORTH

SCALE: 1/4" = 1'-0"

90% SUBMITTAL
NOT FOR CONSTRUCTION

FILE NAME: C:\Documents and Settings\Mackintosh LBA\local settings\temp\AcPublish_1500\ 01 A-FP0001 w elevator revision.dwg
PLOT DATE: Sep 02, 2011 - 10:44am

ISSUE	DATE	DESCRIPTION	BY	CHKD.	APP.

Lozano, Baskin, and Associates, Inc.
Architecture • Urban Design • City Planning
205 Mt. Auburn St. Watertown, MA 02472

MASSACHUSETTS BAY TRANSPORTATION AUTHORITY

FITCHBURG COMMUTER RAIL LINE
IMPROVEMENT PROJECT
CONTRACT NO. G67PS01

SOUTH ACTON STATION
ROOF PLAN
INBOUND HEAD HOUSE

HNTB
300 APOLLO DRIVE
CHELMSFORD, MA 01824
(978) 905-4000

PROJECT MANAGER Date

MASSACHUSETTS BAY TRANSPORTATION AUTHORITY
APPROVED BY:
PROJECT MANAGER Date

HORIZ: N/A	DES. BY	DR. BY	CHK. BY	PLAN NO.	ISSUE
VERT: N/A	MB DW	DW	MB		
DATE: 09/08/11				SHEET A-2.6	

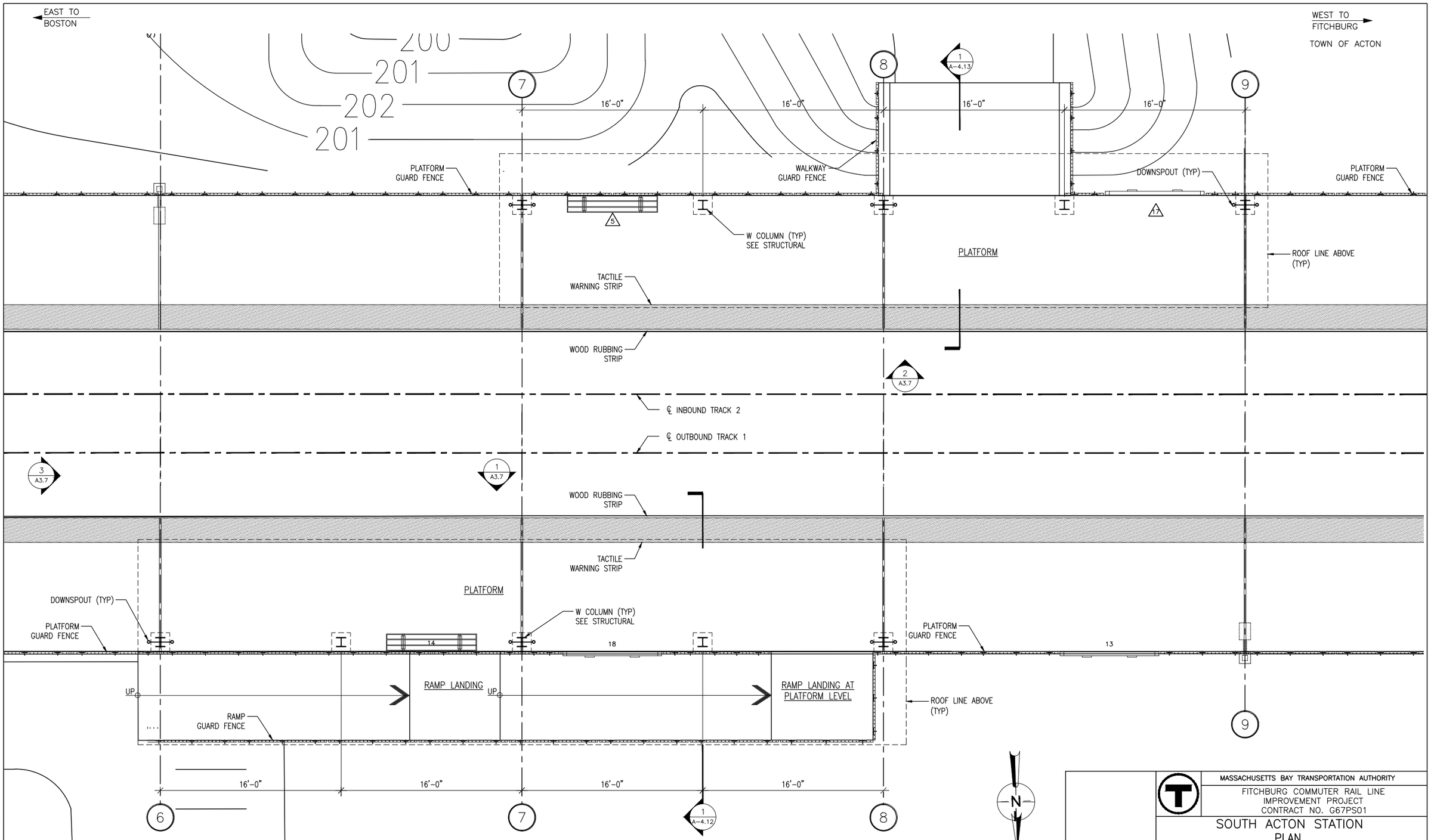

1 PLAN
1/4" = 1'-0"

90% SUBMITTAL
NOT FOR CONSTRUCTION

PROJECT NORTH

0 2 4 8
SCALE: 1/4" = 1'-0"

ISSUE	DATE	DESCRIPTION	BY	CHKD.	APP.

PROJECT MANAGER Date

PROJECT MANAGER Date

Lozano, Baskin, and Associates, Inc.
Architecture•Urban Design•City Planning
205 Mt. Auburn St. Watertown, MA 02472

MASSACHUSETTS BAY TRANSPORTATION AUTHORITY

FITCHBURG COMMUTER RAIL LINE
IMPROVEMENT PROJECT
CONTRACT NO. G67PS01

SOUTH ACTON STATION
PLAN
PLATFORM CANOPY

HNTB
300 APOLLO DRIVE
CHELMSFORD, MA 01824
(978) 905-4000

MASSACHUSETTS BAY TRANSPORTATION AUTHORITY
APPROVED BY:

HORIZ: N/A	DES. BY	DR. BY	CHK. BY	PLAN NO.	ISSUE
VERT: N/A	MB DW	DW	MB		
DATE: 09/08/11				SHEET A-2.7	

FILE NAME: C:\Documents and Settings\Mackintosh LBA\local settings\temp\AcPublish_1500\ 01 A-FP0001 w elevator revision.dwg
PLOT DATE: Sep 02, 2011 - 10:44am

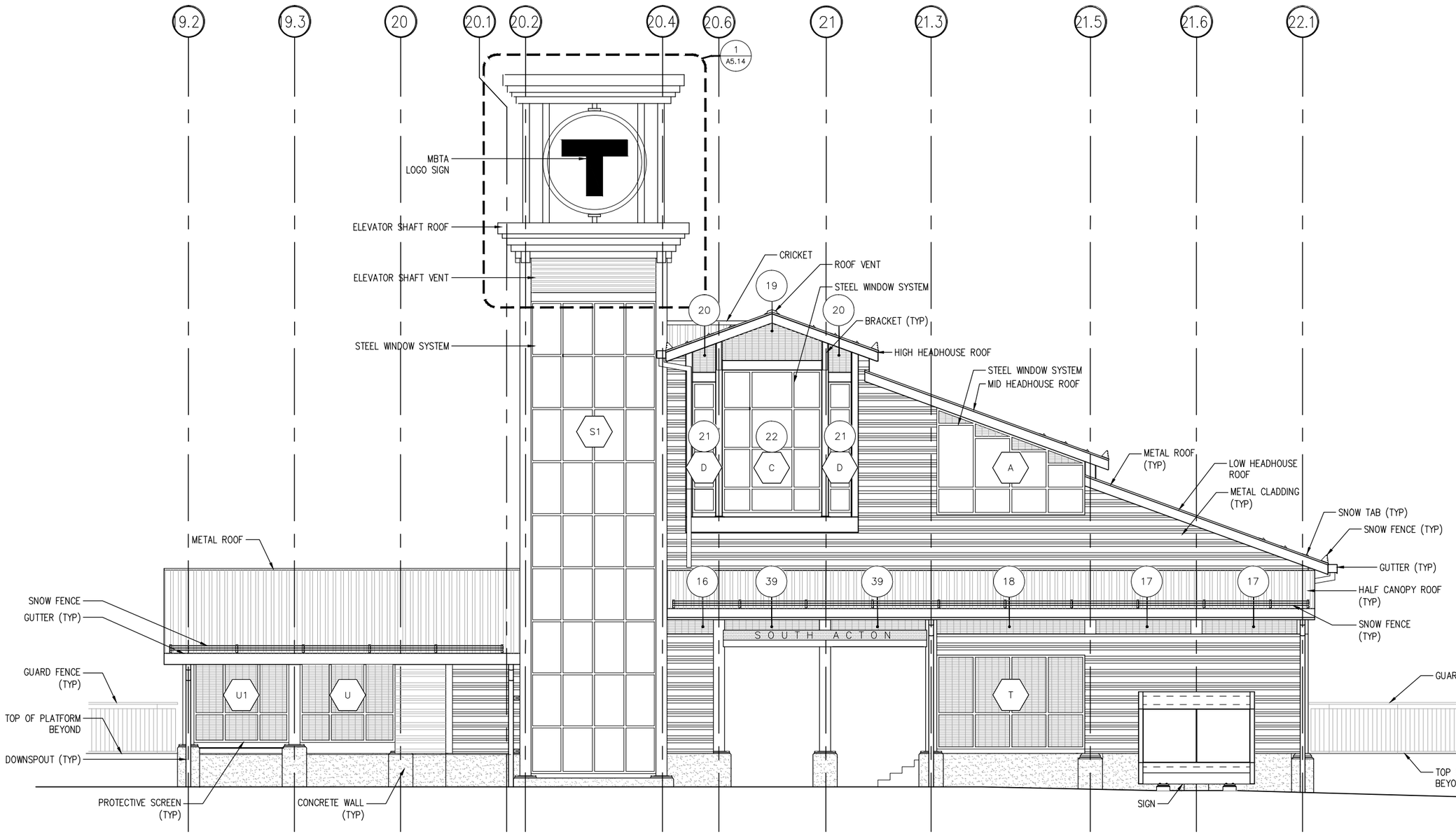

1 ELEVATION
1/4" = 1'-0"

0 2 4 8
SCALE: 1/4" = 1'-0"

90% SUBMITTAL
NOT FOR CONSTRUCTION

FILE NAME: C:\Documents and Settings\Mackintosh LBA\local settings\temp\AcPublish_1500\ 02 A-EL0001.dwg
PLOT DATE: Sep 02, 2011 - 10:44am

MASSACHUSETTS BAY TRANSPORTATION AUTHORITY
FITCHBURG COMMUTER RAIL LINE
IMPROVEMENT PROJECT
CONTRACT NO. G67PS01

SOUTH ACTON STATION
NORTH ELEVATION
OUTBOUND HEAD HOUSE

ISSUE	DATE	DESCRIPTION	BY	CHKD.	APP.

HNTB
300 APOLLO DRIVE
CHELMSFORD, MA 01824
(978) 905-4000

Lozano, Baskin, and Associates, Inc.
Architecture•Urban Design•City Planning
205 Mt. Auburn St. Watertown, MA 02472

MASSACHUSETTS BAY TRANSPORTATION AUTHORITY
APPROVED BY:
PROJECT MANAGER Date
PROJECT MANAGER Date

HORIZ: N/A	DES. BY	DR. BY	CHK. BY	PLAN NO.	ISSUE
VERT: N/A	MB DW	DW	MB		
DATE: 09/08/11				SHEET A-3.1	

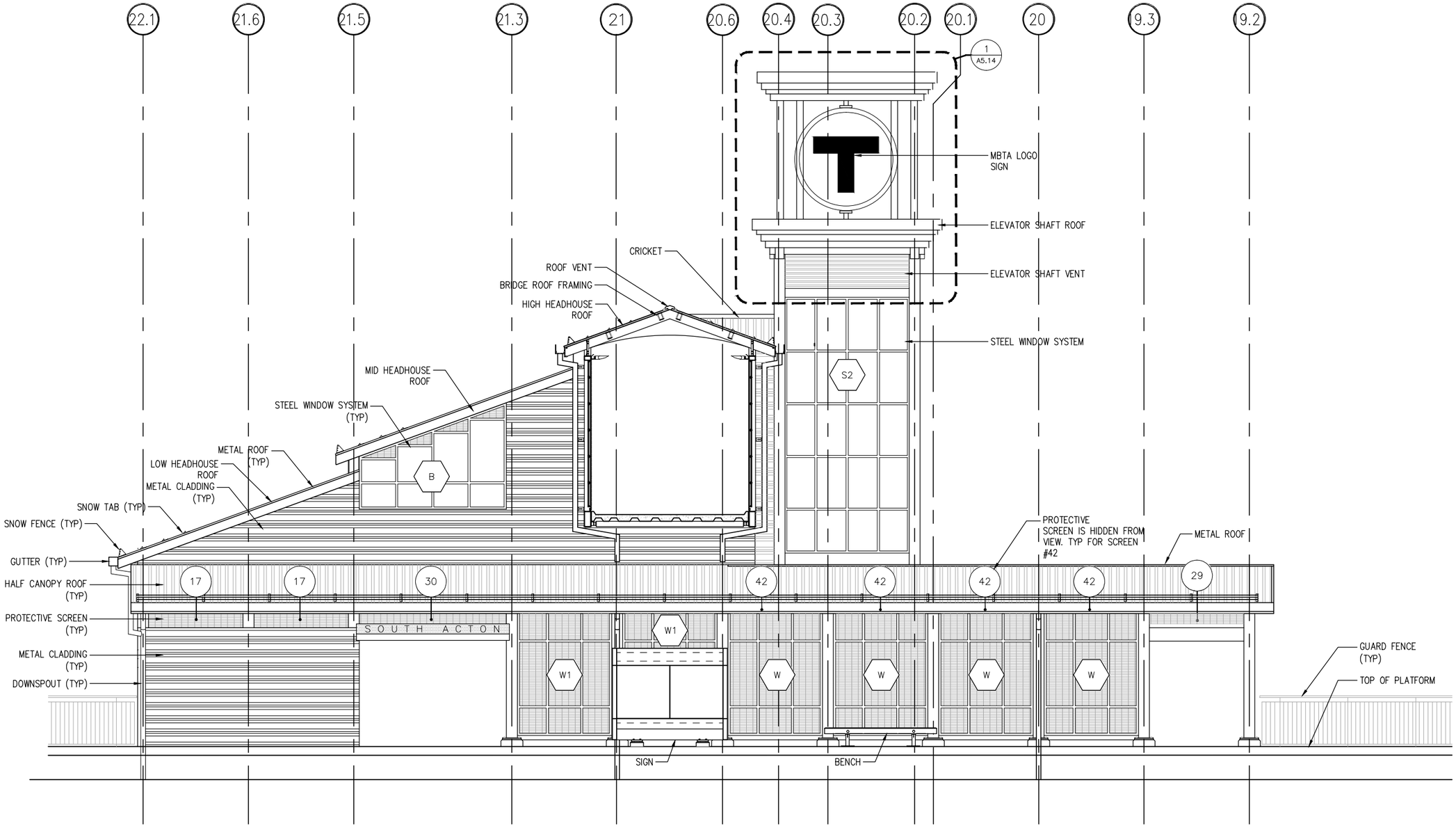

1 ELEVATION
1/4" = 1'-0"

0 2 4 8
SCALE: 1/4" = 1'-0"

90% SUBMITTAL
NOT FOR CONSTRUCTION

FILE NAME: C:\Documents and Settings\Mackintosh LBA\local settings\temp\AcPublish_1500\ 02 A-EL0001.dwg
PLOT DATE: Sep 02, 2011 - 10:44am

ISSUE	DATE	DESCRIPTION	BY	CHKD.	APP.

Lozano, Baskin, and Associates, Inc.
Architecture • Urban Design • City Planning
205 Mt. Auburn St. Watertown, MA 02472

MASSACHUSETTS BAY TRANSPORTATION AUTHORITY

FITCHBURG COMMUTER RAIL LINE
IMPROVEMENT PROJECT
CONTRACT NO. G67PS01

SOUTH ACTON STATION
SOUTH ELEVATION
OUTBOUND HEAD HOUSE

HNTB
300 APOLLO DRIVE
CHELMSFORD, MA 01824
(978) 905-4000

PROJECT MANAGER Date

MASSACHUSETTS BAY TRANSPORTATION AUTHORITY
APPROVED BY:
PROJECT MANAGER Date

HORIZ: N/A	DES. BY	DR. BY	CHK. BY	PLAN NO.	ISSUE
VERT: N/A	MB DW	DW	MB		
DATE: 09/08/11				SHEET A-3.2	

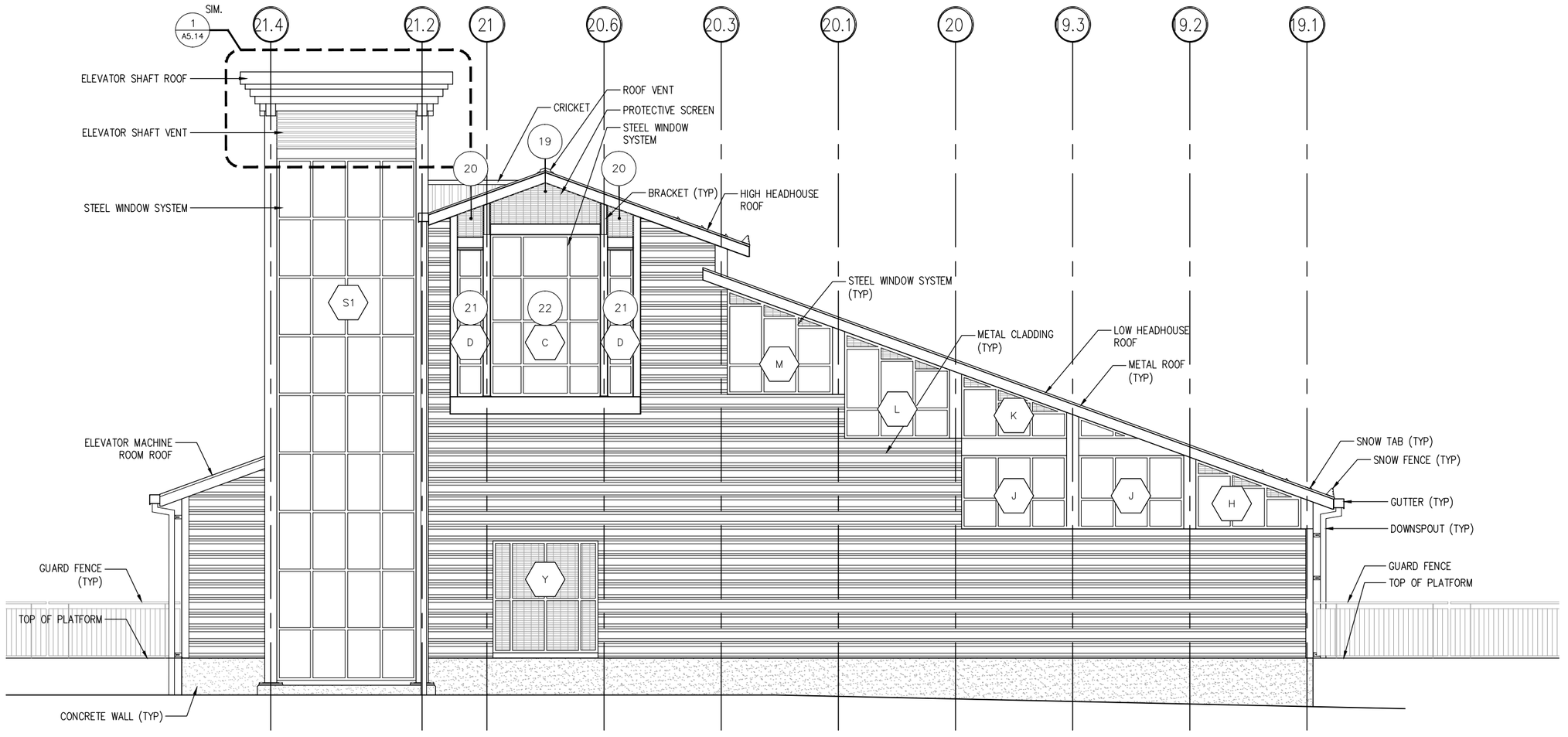

1 ELEVATION
1/4" = 1'-0"

0 2 4 8
SCALE: 1/4" = 1'-0"

90% SUBMITTAL
NOT FOR CONSTRUCTION

ISSUE	DATE	DESCRIPTION	BY	CHKD.	APP.

Lozano, Baskin, and Associates, Inc.
Architecture • Urban Design • City Planning
205 Mt. Auburn St. Watertown, MA 02472

MASSACHUSETTS BAY TRANSPORTATION AUTHORITY

FITCHBURG COMMUTER RAIL LINE
IMPROVEMENT PROJECT
CONTRACT NO. G67PS01

SOUTH ACTON STATION
SOUTH ELEVATION
INBOUND HEAD HOUSE

HNTB
300 APOLLO DRIVE
CHELMSFORD, MA 01824
(978) 905-4000

PROJECT MANAGER Date

MASSACHUSETTS BAY TRANSPORTATION AUTHORITY
APPROVED BY:
PROJECT MANAGER Date

HORIZ: N/A	DES. BY	DR. BY	CHK. BY	PLAN NO.	ISSUE
VERT: N/A	MB DW	DW	MB		
DATE: 09/08/11				SHEET A-3.4	

FILE NAME: C:\Documents and Settings\Mackintosh LBA\local settings\temp\AcPublish_1500\ 02 A-EL0001.dwg
PLOT DATE: Sep 02, 2011 - 10:44am

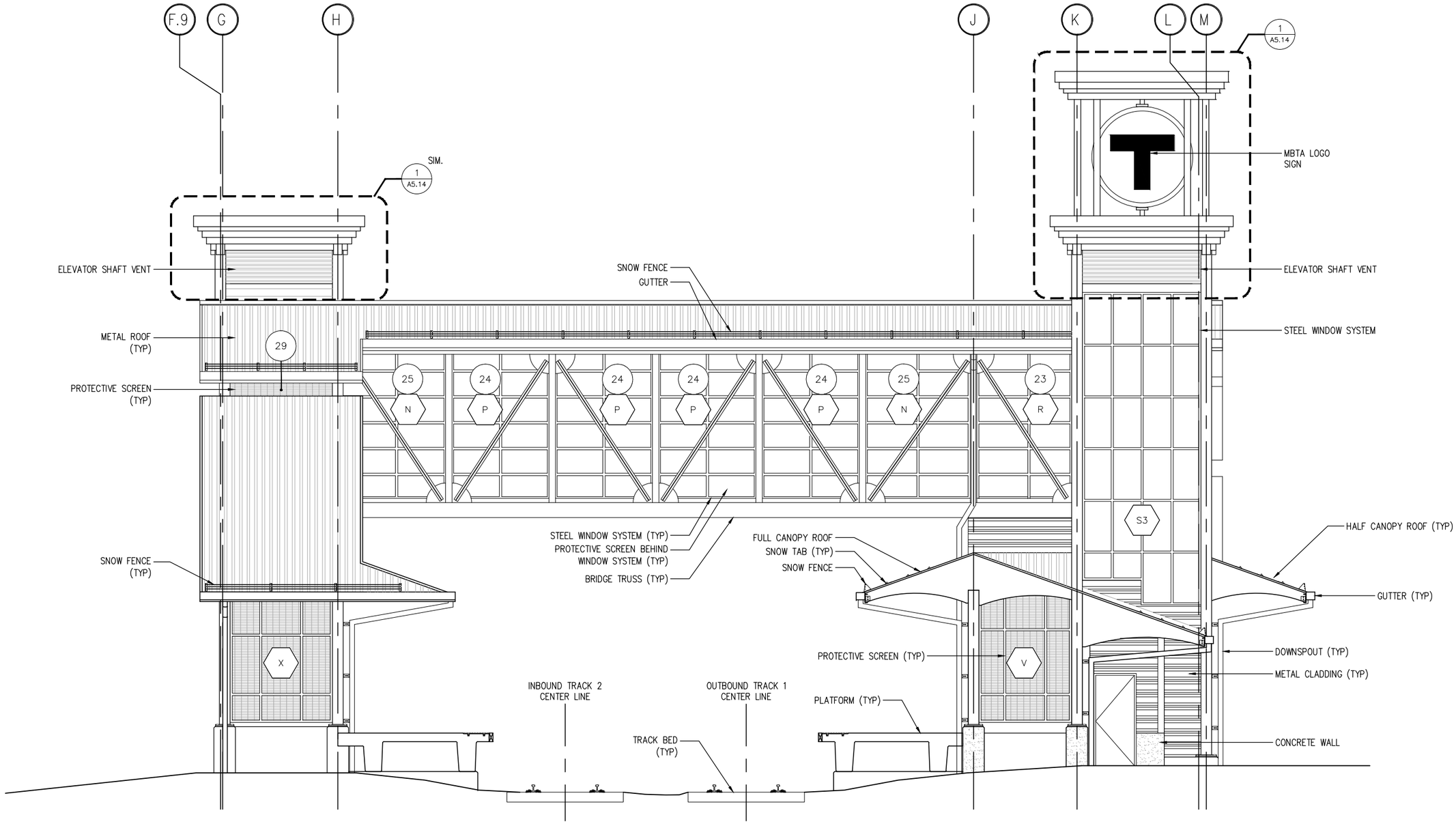

1 ELEVATION
1/4" = 1'-0"

0 2 4 8
SCALE: 1/4" = 1'-0"

90% SUBMITTAL
NOT FOR CONSTRUCTION

ISSUE	DATE	DESCRIPTION	BY	CHKD.	APP.

Lozano, Baskin, and Associates, Inc.
Architecture•Urban Design•City Planning
205 Mt. Auburn St. Watertown, MA 02472

HNTB
300 APOLLO DRIVE
CHELMSFORD, MA 01824
(978) 905-4000

PROJECT MANAGER Date

MASSACHUSETTS BAY TRANSPORTATION AUTHORITY

APPROVED BY:

PROJECT MANAGER Date

MASSACHUSETTS BAY TRANSPORTATION AUTHORITY

FITCHBURG COMMUTER RAIL LINE
IMPROVEMENT PROJECT
CONTRACT NO. G67PS01

SOUTH ACTON STATION
EAST ELEVATION

HORIZ: N/A	DES. BY	DR. BY	CHK. BY	PLAN NO.	ISSUE
VERT: N/A	MB DW	DW	MB		
DATE: 09/08/11				SHEET A-3.5	

FILE NAME: C:\Documents and Settings\Mackintosh LBA\local settings\temp\AcPublish_1500\ 02 A-EL0001.dwg
PLOT DATE: Sep 02, 2011 - 10:44am

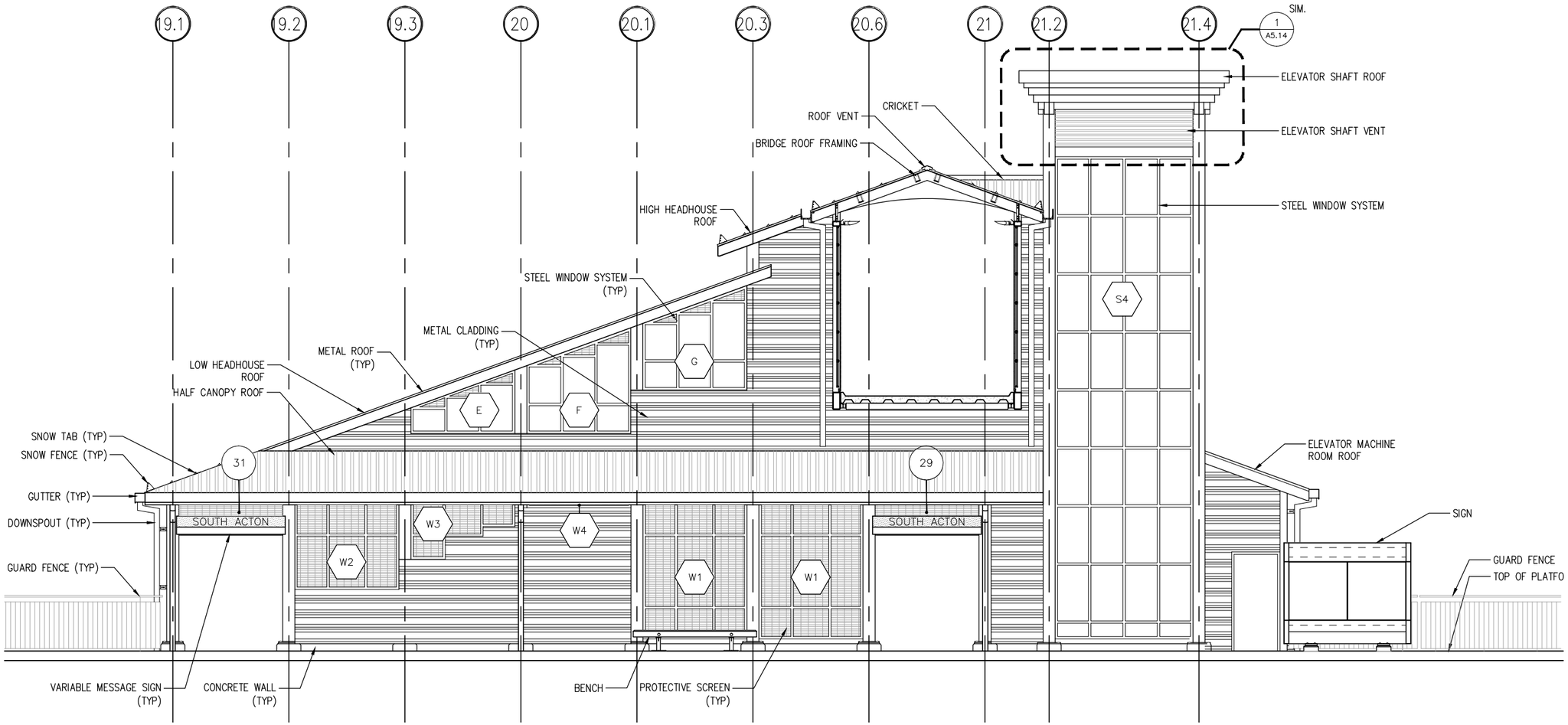

1 ELEVATION
1/4" = 1'-0"

0 2 4 8
SCALE: 1/4" = 1'-0"

90% SUBMITTAL
NOT FOR CONSTRUCTION

ISSUE	DATE	DESCRIPTION	BY	CHKD.	APP.

Lozano, Baskin, and Associates, Inc.
Architecture • Urban Design • City Planning
205 Mt. Auburn St. Watertown, MA 02472

MASSACHUSETTS BAY TRANSPORTATION AUTHORITY

FITCHBURG COMMUTER RAIL LINE
IMPROVEMENT PROJECT
CONTRACT NO. G67PS01

SOUTH ACTON STATION
NORTH ELEVATION
INBOUND HEAD HOUSE

HNTB
300 APOLLO DRIVE
CHELMSFORD, MA 01824
(978) 905-4000

PROJECT MANAGER Date

MASSACHUSETTS BAY TRANSPORTATION AUTHORITY
APPROVED BY:
PROJECT MANAGER Date

HORIZ: N/A	DES. BY	DR. BY	CHK. BY	PLAN NO.	ISSUE
VERT: N/A	MB	DW	MB		
DATE: 09/08/11	DW			SHEET A-3.3	

FILE NAME: C:\Documents and Settings\Mackintosh LBA\local settings\temp\AcPublish_1500\ 02 A-EL0001.dwg
PLOT DATE: Sep 02, 2011 - 10:44am

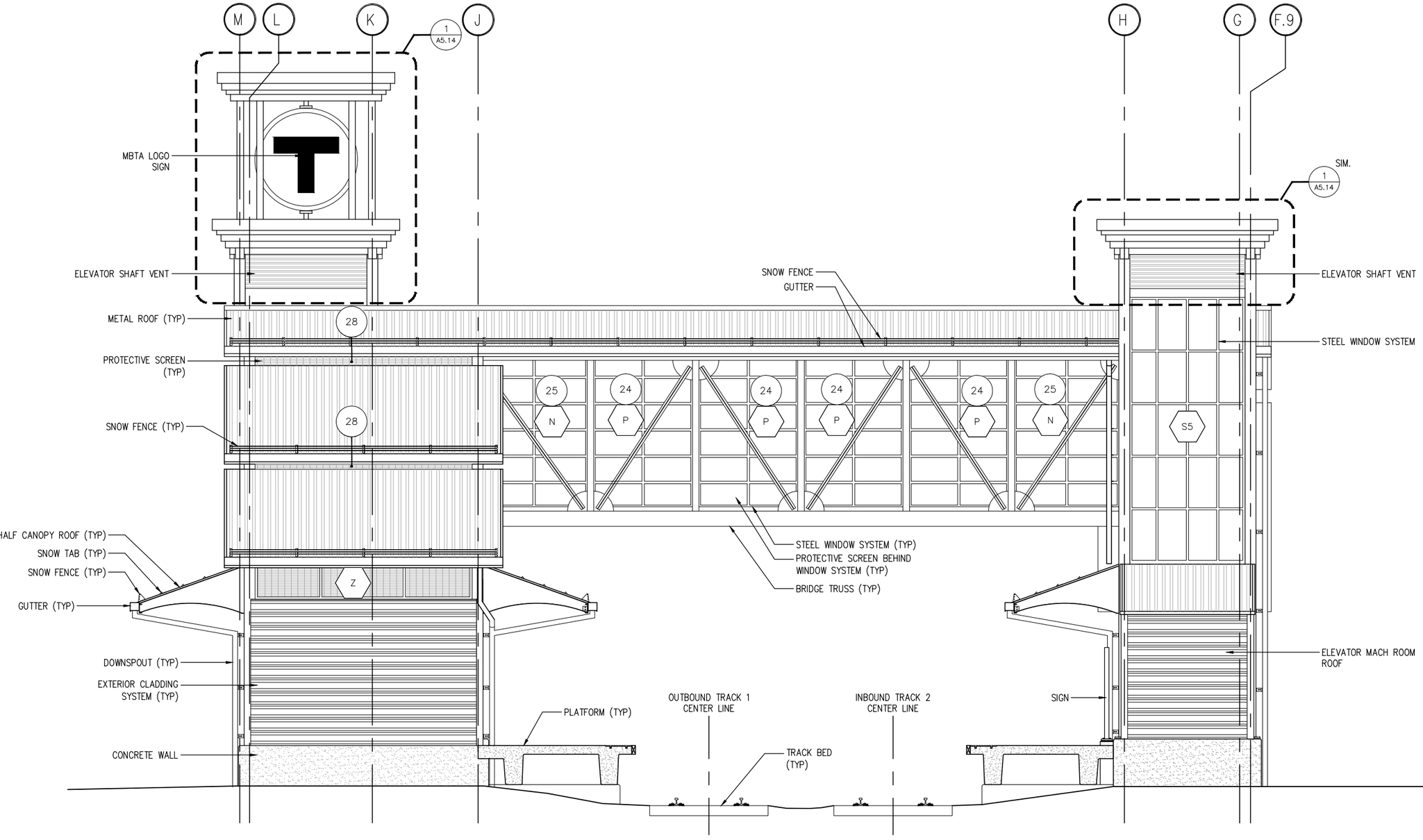

1 ELEVATION
1/4" = 1'-0"

0 2 4 8
SCALE: 1/4" = 1'-0"

90% SUBMITTAL
NOT FOR CONSTRUCTION

ISSUE	DATE	DESCRIPTION	BY	CHKD.	APP.

Lozano, Baskin, and Associates, Inc.
Architecture • Urban Design • City Planning
205 Mt. Auburn St. Watertown, MA 02472

HNTB
300 APOLLO DRIVE
CHELMSFORD, MA 01824
(978) 905-4000

PROJECT MANAGER Date

MASSACHUSETTS BAY TRANSPORTATION AUTHORITY

APPROVED BY:

PROJECT MANAGER Date

MASSACHUSETTS BAY TRANSPORTATION AUTHORITY

FITCHBURG COMMUTER RAIL LINE
IMPROVEMENT PROJECT
CONTRACT NO. G67PS01

SOUTH ACTON STATION
WEST ELEVATION

HORIZ: N/A	DES. BY	DR. BY	CHK. BY	PLAN NO.	ISSUE
VERT: N/A	MB DW	DW	MB		
DATE: 09/08/11				SHEET A-3.6	

FILE NAME: C:\Documents and Settings\Mackintosh LBA\local settings\temp\AcPublish_1500\ 02 A-EL0001.dwg
PLOT DATE: Sep 02, 2011 - 10:44am

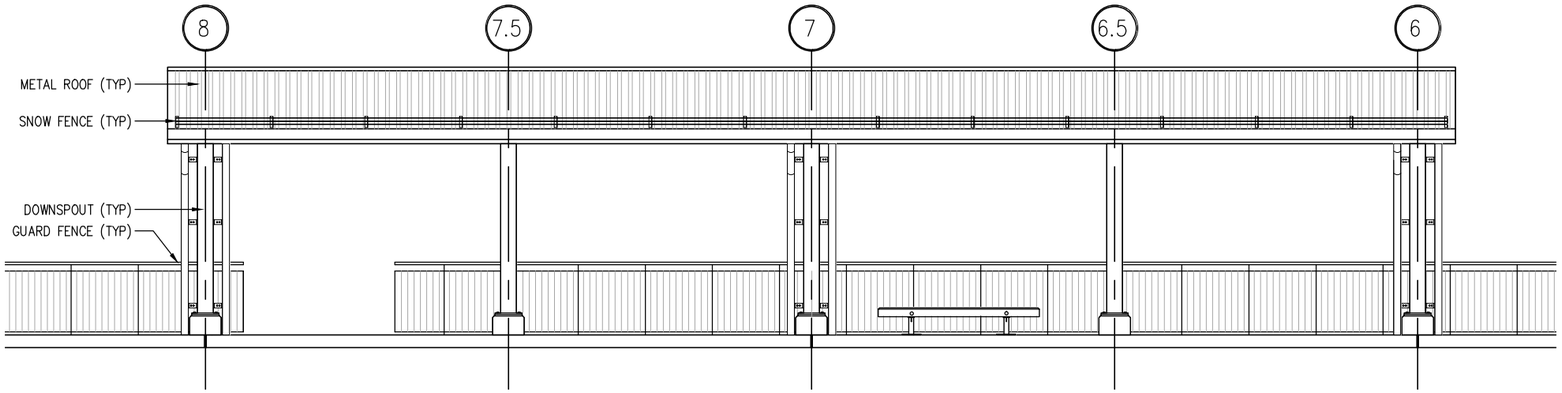

1 ELEVATION
1/4" = 1'-0"

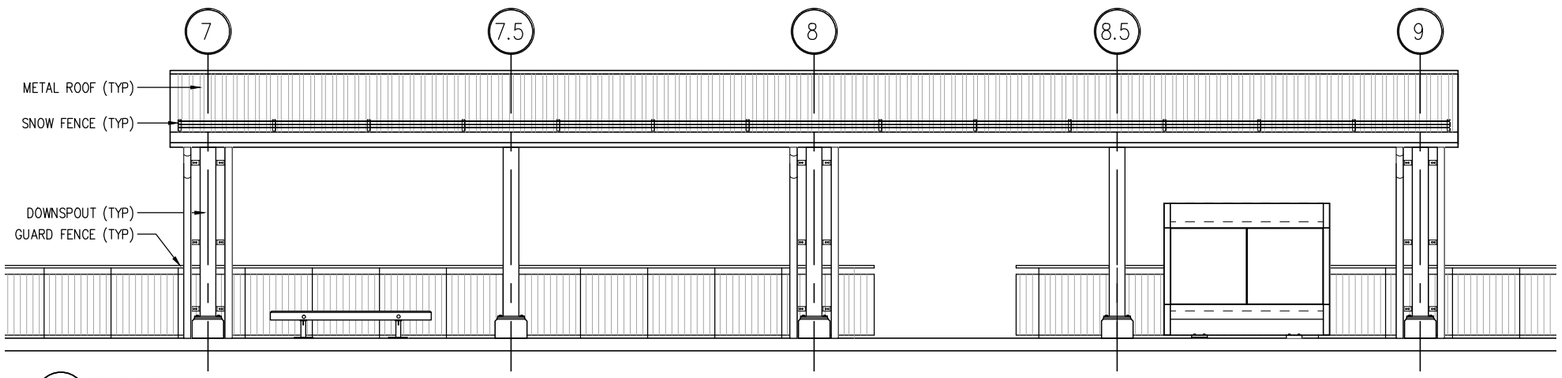

2 ELEVATION
1/4" = 1'-0"

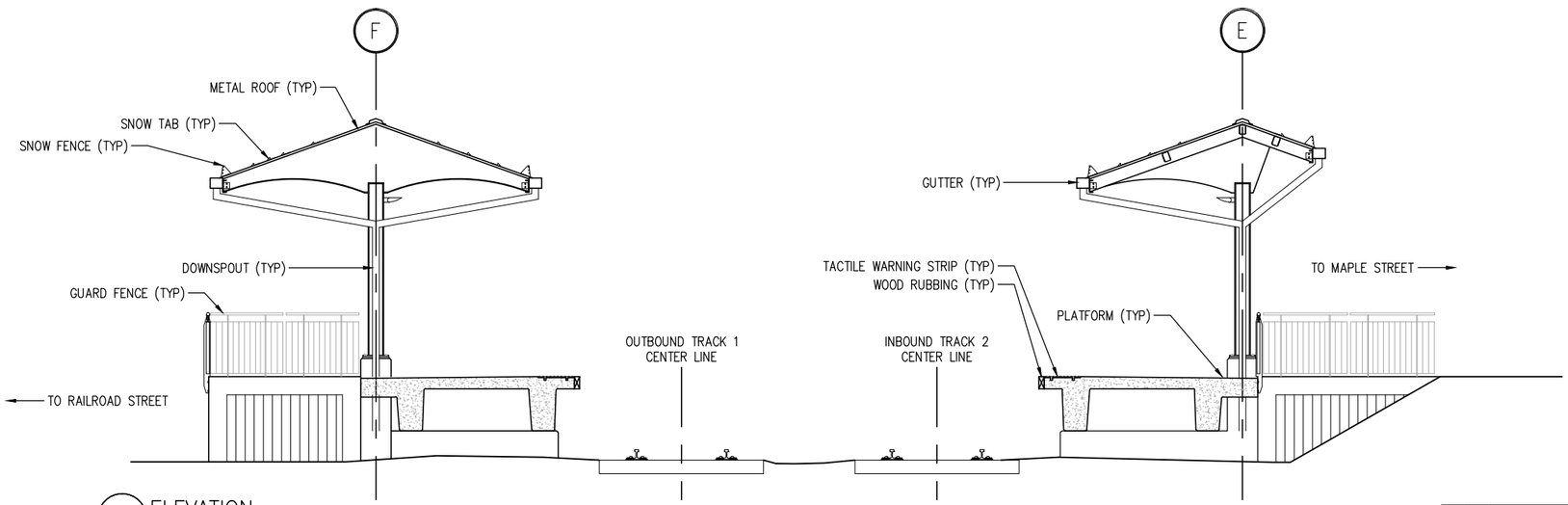

3 ELEVATION
1/4" = 1'-0"

0 2 4 8
SCALE: 1/4" = 1'-0"

90% SUBMITTAL
NOT FOR CONSTRUCTION

FILE NAME: C:\Documents and Settings\Mackintosh LBA\local settings\temp\AcPublish_1500\ 02 A-EL0001.dwg
PLOT DATE: Sep 02, 2011 - 10:44am

ISSUE	DATE	DESCRIPTION	BY	CHKD.	APP.

PROJECT MANAGER Date

Lozano, Baskin, and Associates, Inc.
Architecture•Urban Design•City Planning
205 Mt. Auburn St. Watertown, MA 02472

MASSACHUSETTS BAY TRANSPORTATION AUTHORITY

FITCHBURG COMMUTER RAIL LINE
IMPROVEMENT PROJECT
CONTRACT NO. G67PS01

SOUTH ACTON STATION
ELEVATION
PLATFORM CANOPIES

HNTB
300 APOLLO DRIVE
CHELMSFORD, MA 01824
(978) 905-4000

MASSACHUSETTS BAY TRANSPORTATION AUTHORITY
APPROVED BY:
PROJECT MANAGER Date

HORIZ: N/A	DES. BY	DR. BY	CHK. BY
VERT: N/A	MB DW	DW	MB
DATE: 09/08/11			

PLAN NO.
SHEET A-3.7
ISSUE

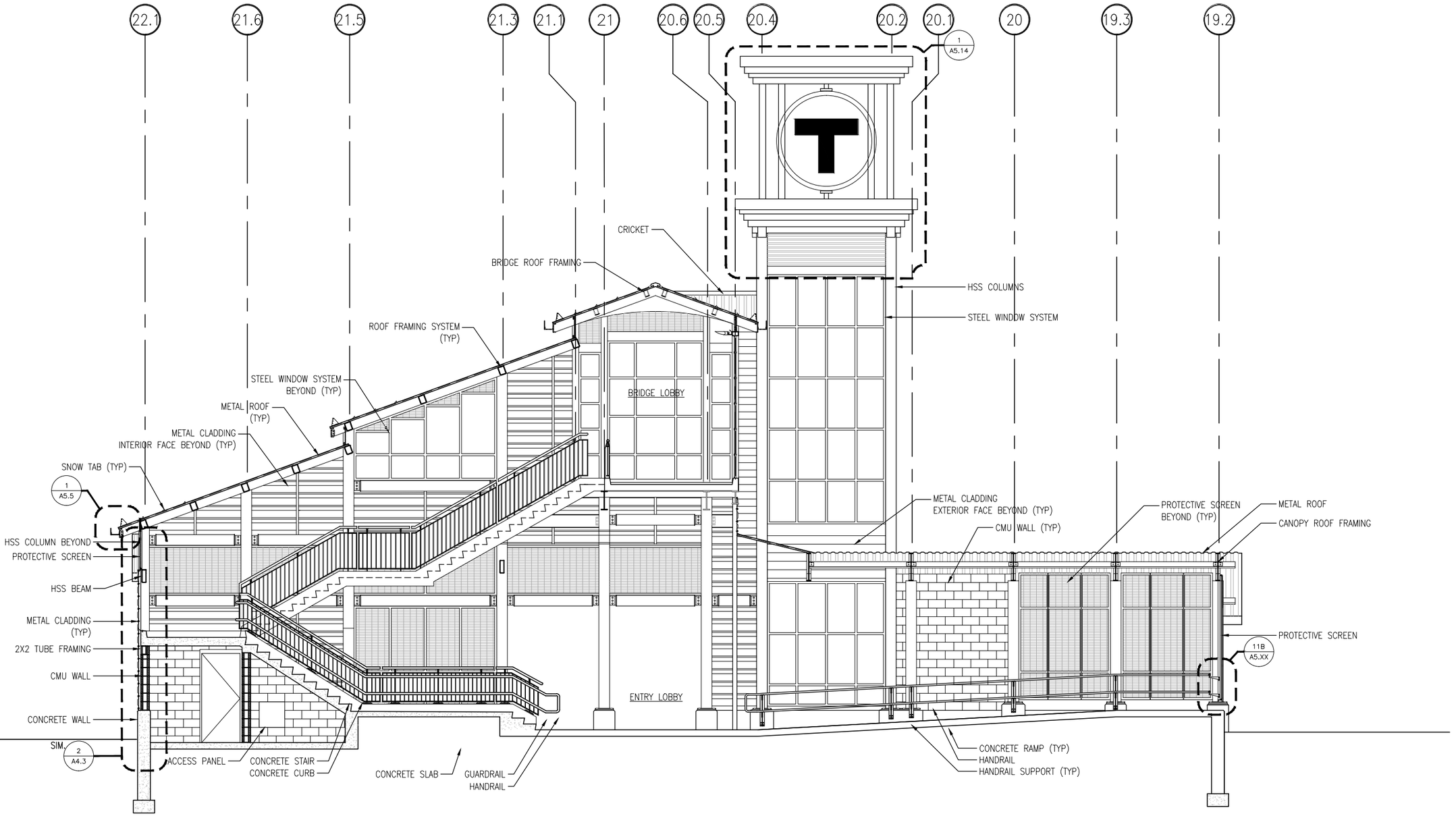

1 SECTION
1/4" = 1'-0"

0 2 4 8
SCALE: 1/4" = 1'-0"

90% SUBMITTAL
NOT FOR CONSTRUCTION

FILE NAME: C:\Documents and Settings\Mackintosh LBA\local settings\temp\AcPublish_1604\ 03 A-SE0001.dwg
PLOT DATE: Sep 02, 2011 - 8:17am

MASSACHUSETTS BAY TRANSPORTATION AUTHORITY

FITCHBURG COMMUTER RAIL LINE
IMPROVEMENT PROJECT
CONTRACT NO. G67PS01

SOUTH ACTON STATION
BUILDING SECTIONS
OUTBOUND HEAD HOUSE

ISSUE	DATE	DESCRIPTION	BY	CHKD.	APP.

HNTB
300 APOLLO DRIVE
CHELMSFORD, MA 01824
(978) 905-4000

PROJECT MANAGER Date

MASSACHUSETTS BAY TRANSPORTATION AUTHORITY
APPROVED BY:
PROJECT MANAGER Date

Lozano, Baskin, and Associates, Inc.
Architecture•Urban Design•City Planning
205 Mt. Auburn St. Watertown, MA 02472

HORIZ: N/A	DES. BY	DR. BY	CHK. BY	PLAN NO.	ISSUE
VERT: N/A	MB DW	DW	MB		
DATE: 09/08/11				SHEET A-4.1	

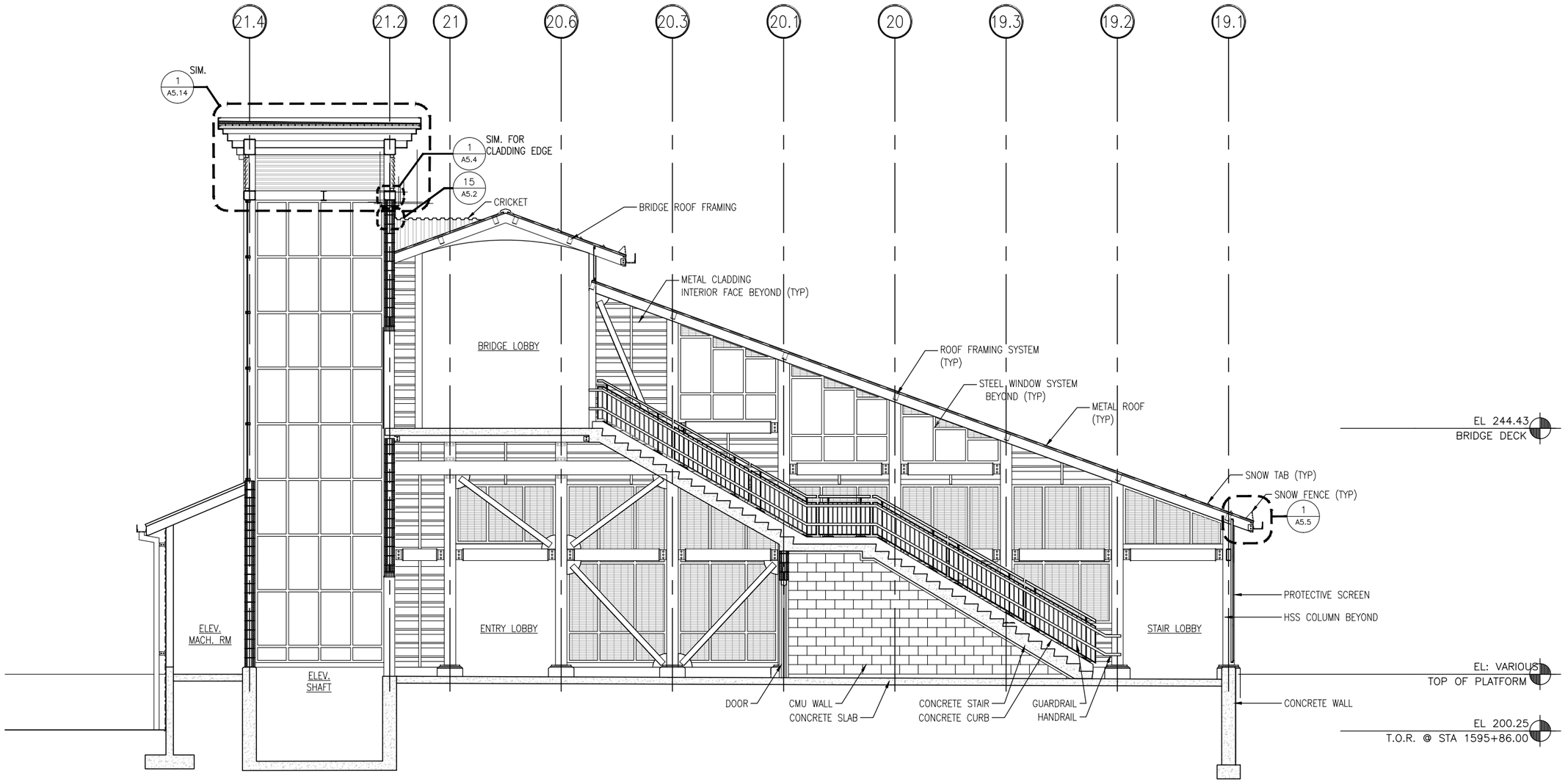

1 SECTION
1/4" = 1'-0"

0 2 4 8
SCALE: 1/4" = 1'-0"

90% SUBMITTAL
NOT FOR CONSTRUCTION

FILE NAME: C:\Documents and Settings\Mackintosh LBA\Local Settings\Temp\AcPublish_1604\ 03 A-SE0001.dwg
PLOT DATE: Sep 02, 2011 - 8:17am

MASSACHUSETTS BAY TRANSPORTATION AUTHORITY
FITCHBURG COMMUTER RAIL LINE
IMPROVEMENT PROJECT
CONTRACT NO. G67PS01

SOUTH ACTON STATION
BUILDING SECTIONS
INBOUND HEAD HOUSE

ISSUE	DATE	DESCRIPTION	BY	CHKD.	APP.

HNTB
300 APOLLO DRIVE
CHELMSFORD, MA 01824
(978) 905-4000

PROJECT MANAGER Date

MASSACHUSETTS BAY TRANSPORTATION AUTHORITY
APPROVED BY:
PROJECT MANAGER Date

Lozano, Baskin, and Associates, Inc.
Architecture•Urban Design•City Planning
205 Mt. Auburn St. Watertown, MA 02472

HORIZ: N/A	DES. BY	DR. BY	CHK. BY	PLAN NO.	ISSUE
VERT: N/A	MB	DW	MB		
DATE: 09/08/11	DW			SHEET A-4.2	

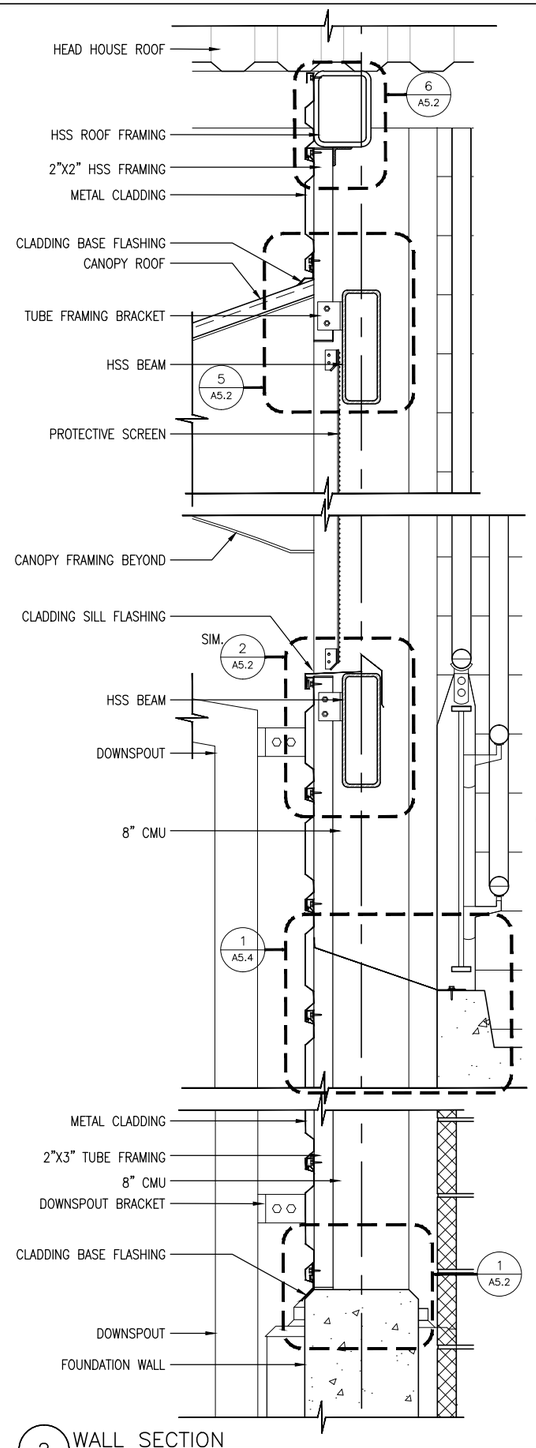

2 WALL SECTION
1-1/2" = 1'-0"

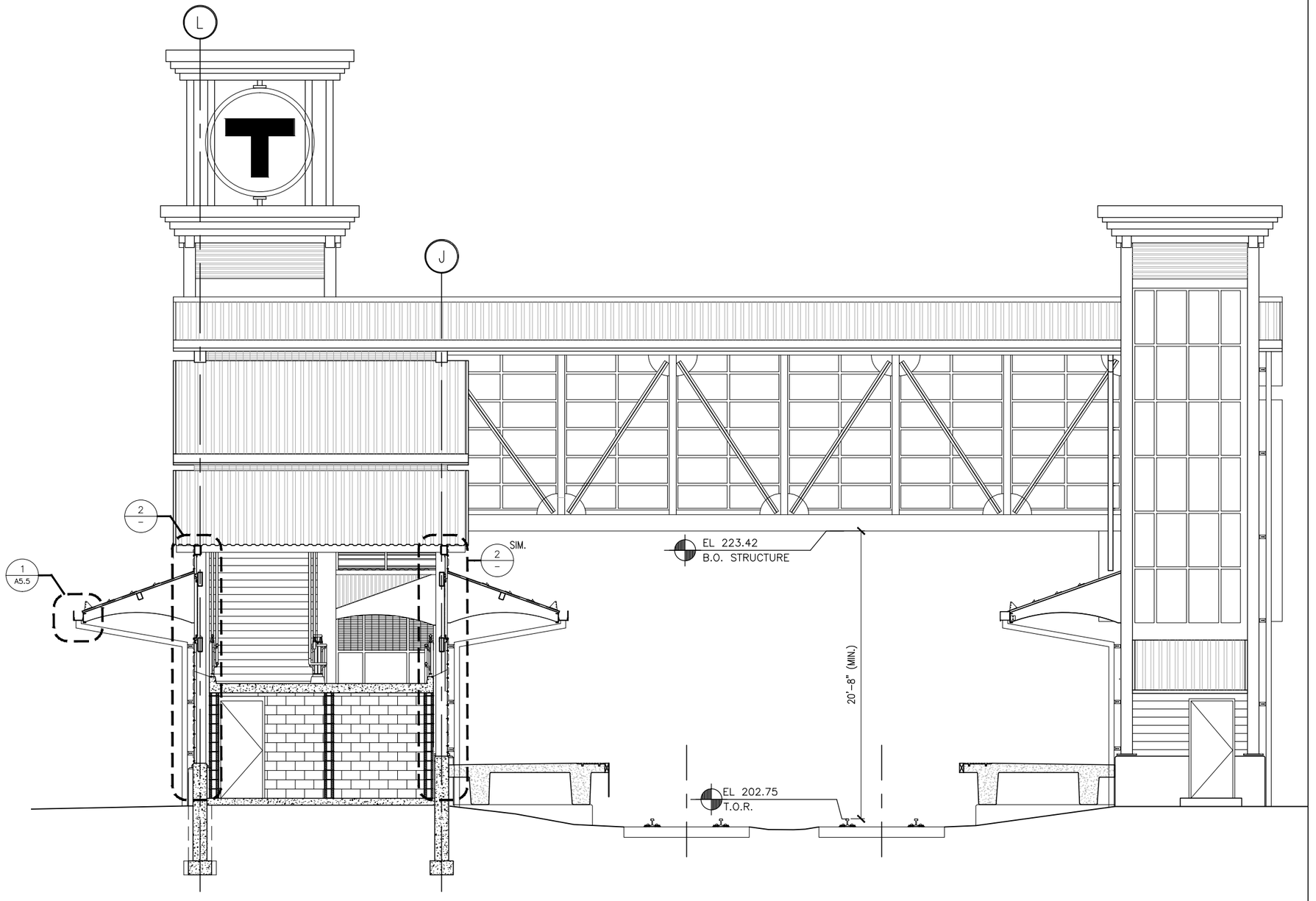

1 SECTION
1/4" = 1'-0"

90% SUBMITTAL
NOT FOR CONSTRUCTION

0 2' 4' 8'
SCALE: 1/4" = 1'-0"

0 4" 8" 1'-4"
SCALE: 1 1/2" = 1'-0"

MASSACHUSETTS BAY TRANSPORTATION AUTHORITY
FITCHBURG COMMUTER RAIL LINE
IMPROVEMENT PROJECT
CONTRACT NO. G67PS01

SOUTH ACTON STATION
BUILDING SECTIONS
HEAD HOUSES

ISSUE	DATE	DESCRIPTION	BY	CHKD.	APP.

HNTB
300 APOLLO DRIVE
CHELMSFORD, MA 01824
(978) 905-4000

PROJECT MANAGER Date

MASSACHUSETTS BAY TRANSPORTATION AUTHORITY
APPROVED BY:
PROJECT MANAGER Date

Lozano, Baskin, and Associates, Inc.
Architecture•Urban Design•City Planning
205 Mt. Auburn St. Watertown, MA 02472

HORIZ: N/A	DES. BY	DR. BY	CHK. BY	PLAN NO.	ISSUE
VERT: N/A	MB DW	DW	MB		
DATE: 09/08/11				SHEET A-4.3	

FILE NAME: C:\Documents and Settings\Mackintosh LBA\local settings\temp\AcPublish_1604\ 03 A-SE0001.dwg
PLOT DATE: Sep 02, 2011 - 8:17am

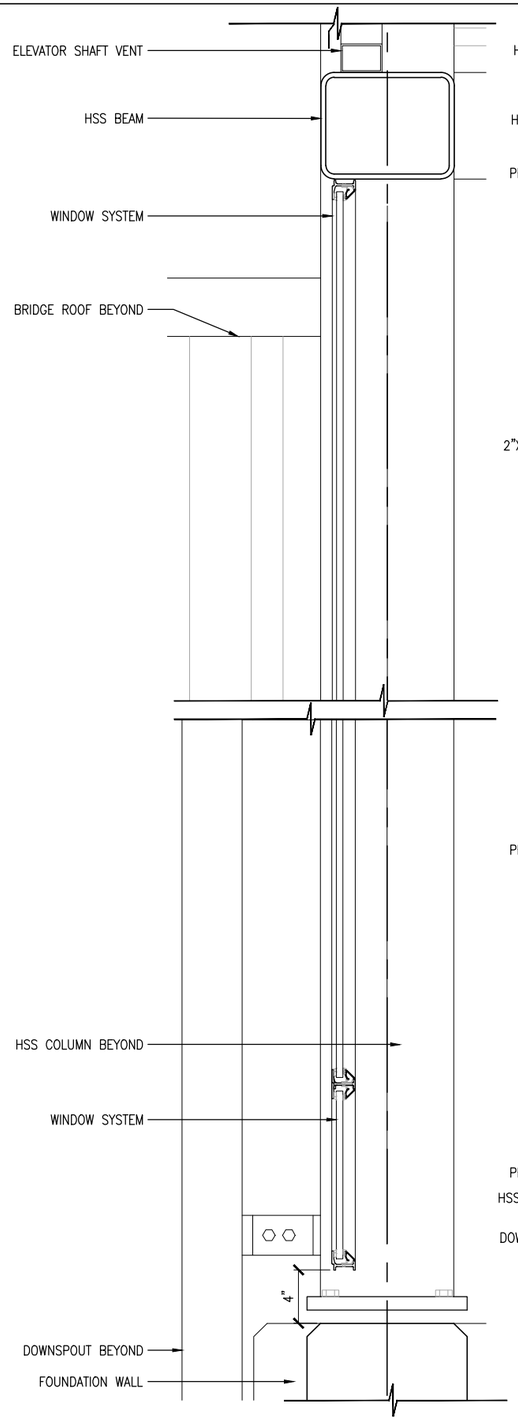

3 WALL SECTION
1-1/2" = 1'-0"

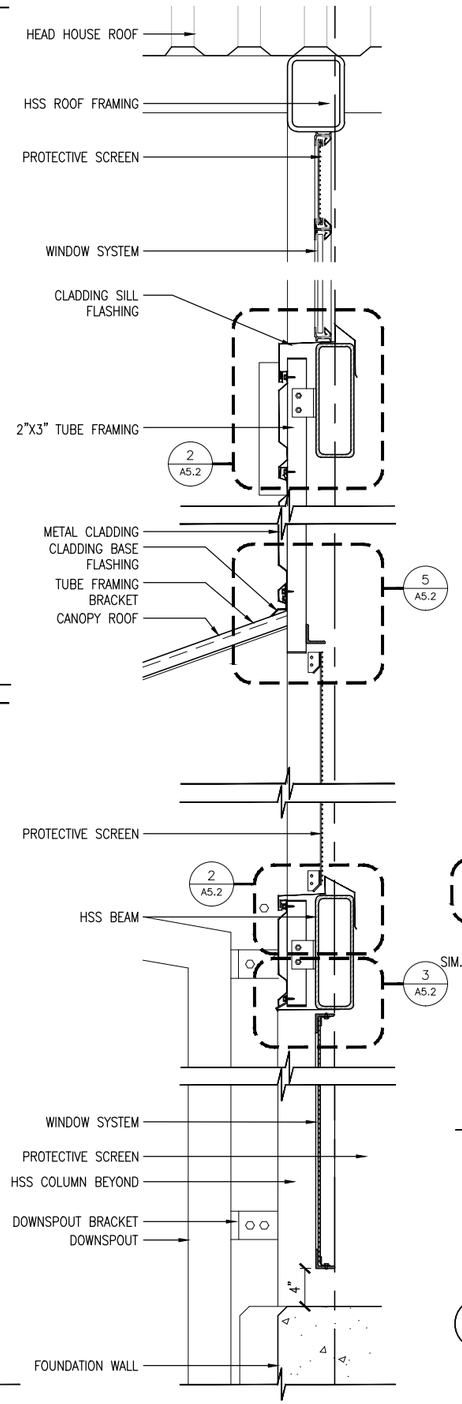

2 WALL SECTION
1-1/2" = 1'-0"

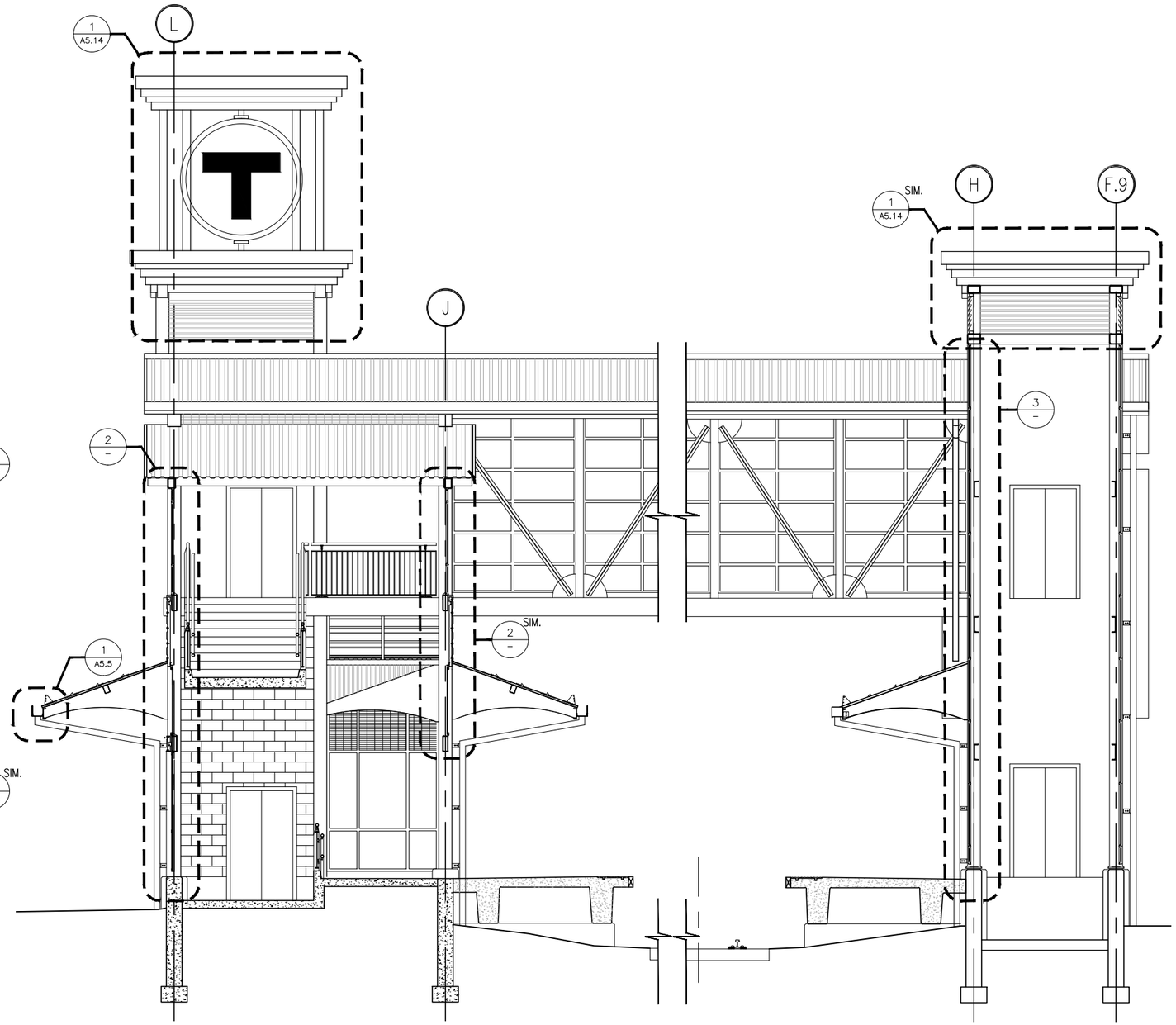

1 SECTION
1/4" = 1'-0"

0 2' 4' 8'
SCALE: 1/4" = 1'-0"

0 4" 8" 1'-4"
SCALE: 1 1/2" = 1'-0"

90% SUBMITTAL
NOT FOR CONSTRUCTION

ISSUE	DATE	DESCRIPTION	BY	CHKD.	APP.

Lozano, Baskin, and Associates, Inc.
Architecture•Urban Design•City Planning
205 Mt. Auburn St. Watertown, MA 02472

MASSACHUSETTS BAY TRANSPORTATION AUTHORITY

FITCHBURG COMMUTER RAIL LINE
IMPROVEMENT PROJECT
CONTRACT NO. G67PS01

SOUTH ACTON STATION
BUILDING SECTIONS
HEAD HOUSES

HNTB
300 APOLLO DRIVE
CHELMSFORD, MA 01824
(978) 905-4000

PROJECT MANAGER Date

MASSACHUSETTS BAY TRANSPORTATION AUTHORITY
APPROVED BY:
PROJECT MANAGER Date

HORIZ: N/A	DES. BY	DR. BY	CHK. BY	PLAN NO.	ISSUE
VERT: N/A	MB DW	DW	MB		
DATE: 09/08/11				SHEET A-4.4	

FILE NAME: C:\Documents and Settings\Mackintosh LBA\Local settings\temp\AcPublish_1604\ 03 A-SE0001.dwg
PLOT DATE: Sep 02, 2011 - 8:17am

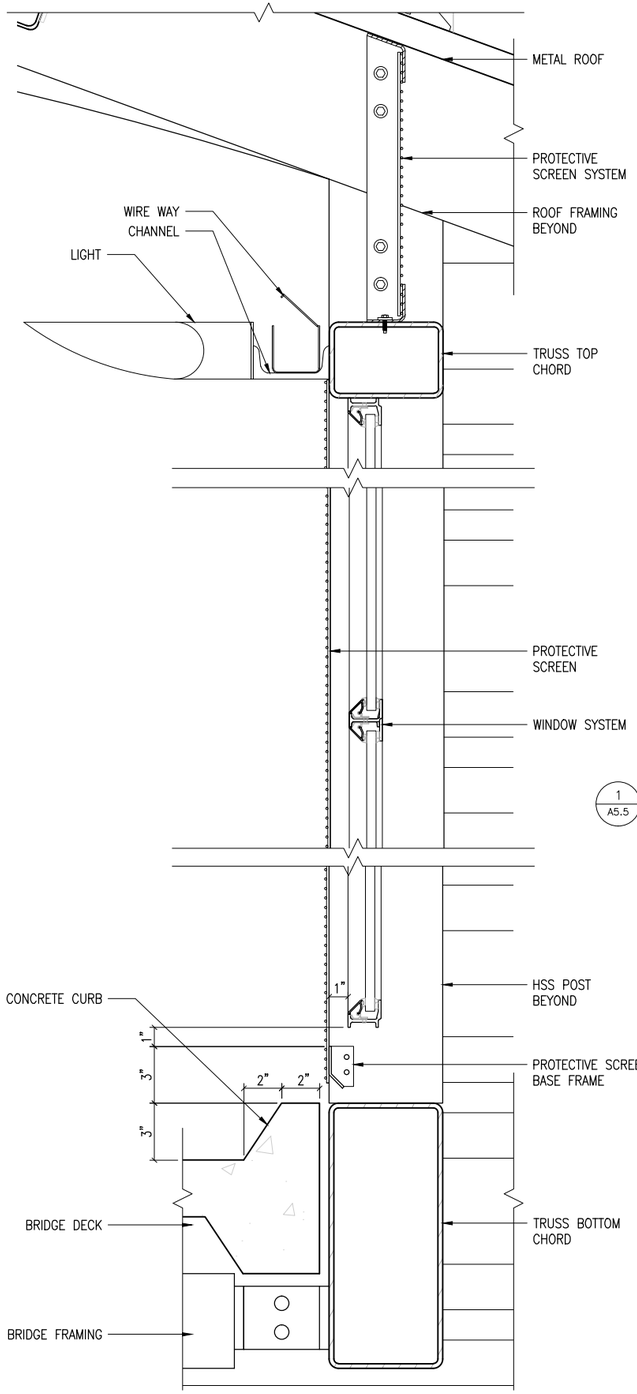

2 TYPICAL WALL SECTION: BRIDGE
3" = 1'-0"

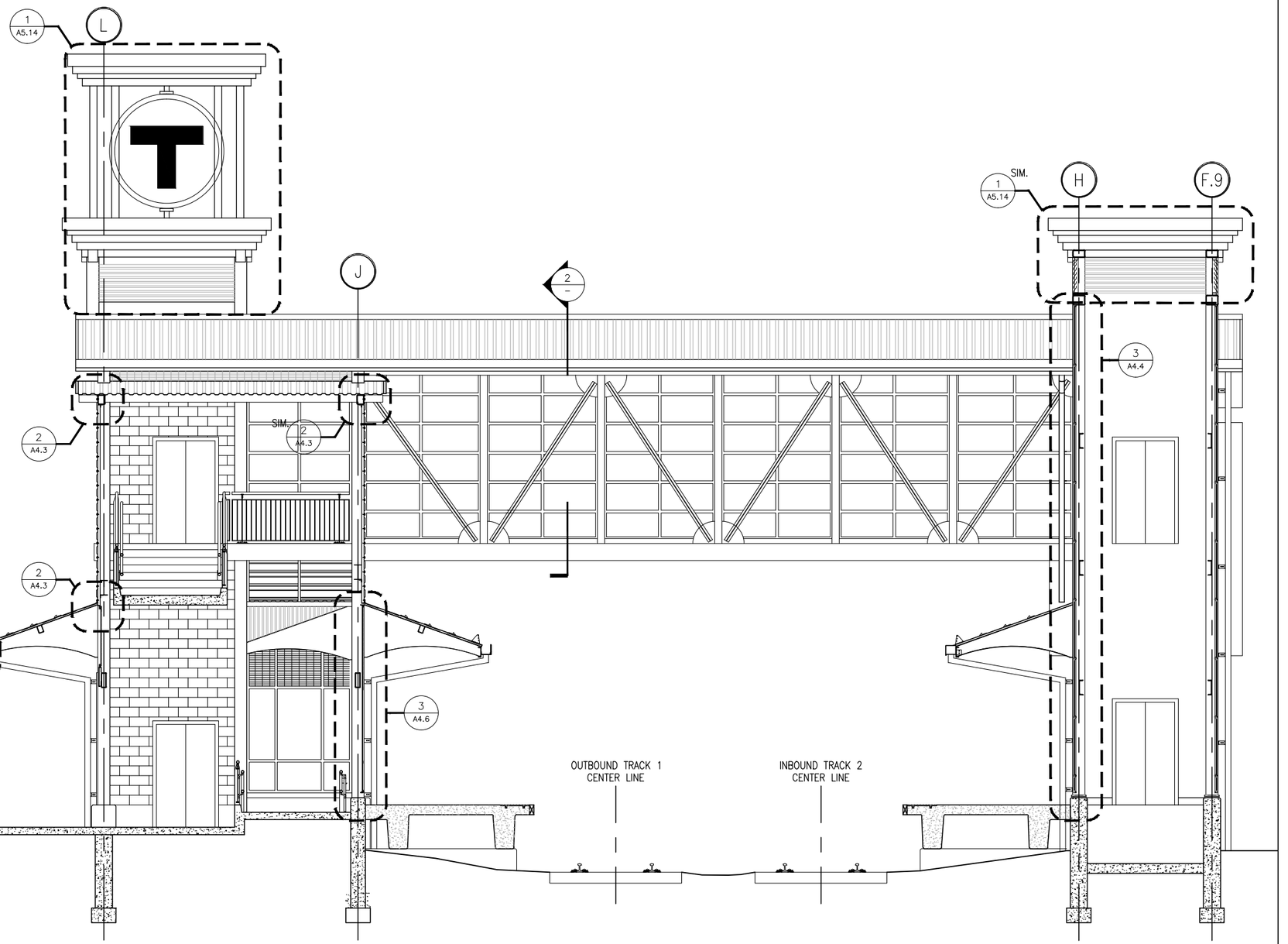

1 SECTION
1/4" = 1'-0"

0 2' 4' 8'
SCALE: 1/4" = 1'-0"

0 2" 4" 8"
SCALE: 3" = 1'-0"

90% SUBMITTAL
NOT FOR CONSTRUCTION

FILE NAME: C:\Documents and Settings\Mackintosh LBA\local settings\temp\AcPublish_1604\ 03 A-SE0001.dwg
PLOT DATE: Sep 02, 2011 - 8:17am

MASSACHUSETTS BAY TRANSPORTATION AUTHORITY

FITCHBURG COMMUTER RAIL LINE
IMPROVEMENT PROJECT
CONTRACT NO. G67PS01

SOUTH ACTON STATION
BUILDING SECTIONS
HEAD HOUSES

ISSUE	DATE	DESCRIPTION	BY	CHKD.	APP.

HNTB
300 APOLLO DRIVE
CHELMSFORD, MA 01824
(978) 905-4000

Lozano, Baskin, and Associates, Inc.
Architecture • Urban Design • City Planning
205 Mt. Auburn St. Watertown, MA 02472

MASSACHUSETTS BAY TRANSPORTATION AUTHORITY
APPROVED BY:

PROJECT MANAGER Date
PROJECT MANAGER Date

HORIZ: N/A	DES. BY	DR. BY	CHK. BY	PLAN NO.	ISSUE
VERT: N/A	MB DW	DW	MB		
DATE: 09/08/11				SHEET A-4.5	

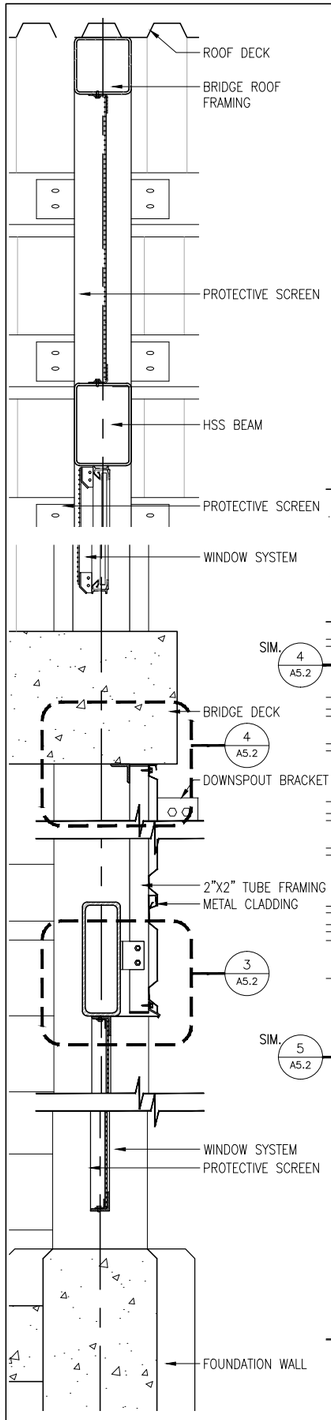

4 WALL SECTION
1-1/2" = 1'-0"

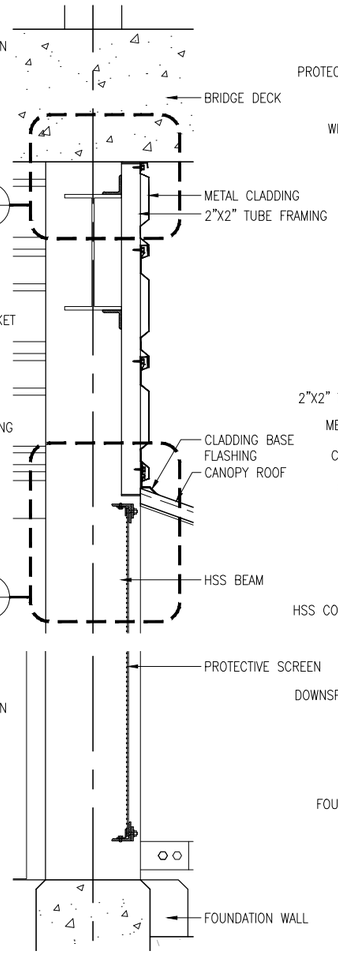

3 WALL SECTION
1-1/2" = 1'-0"

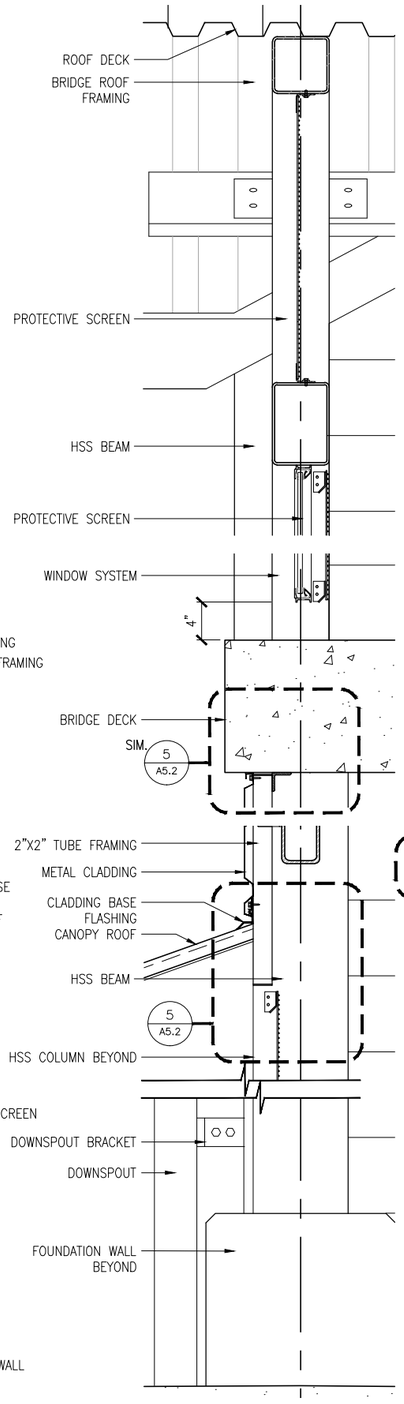

2 WALL SECTION
1-1/2" = 1'-0"

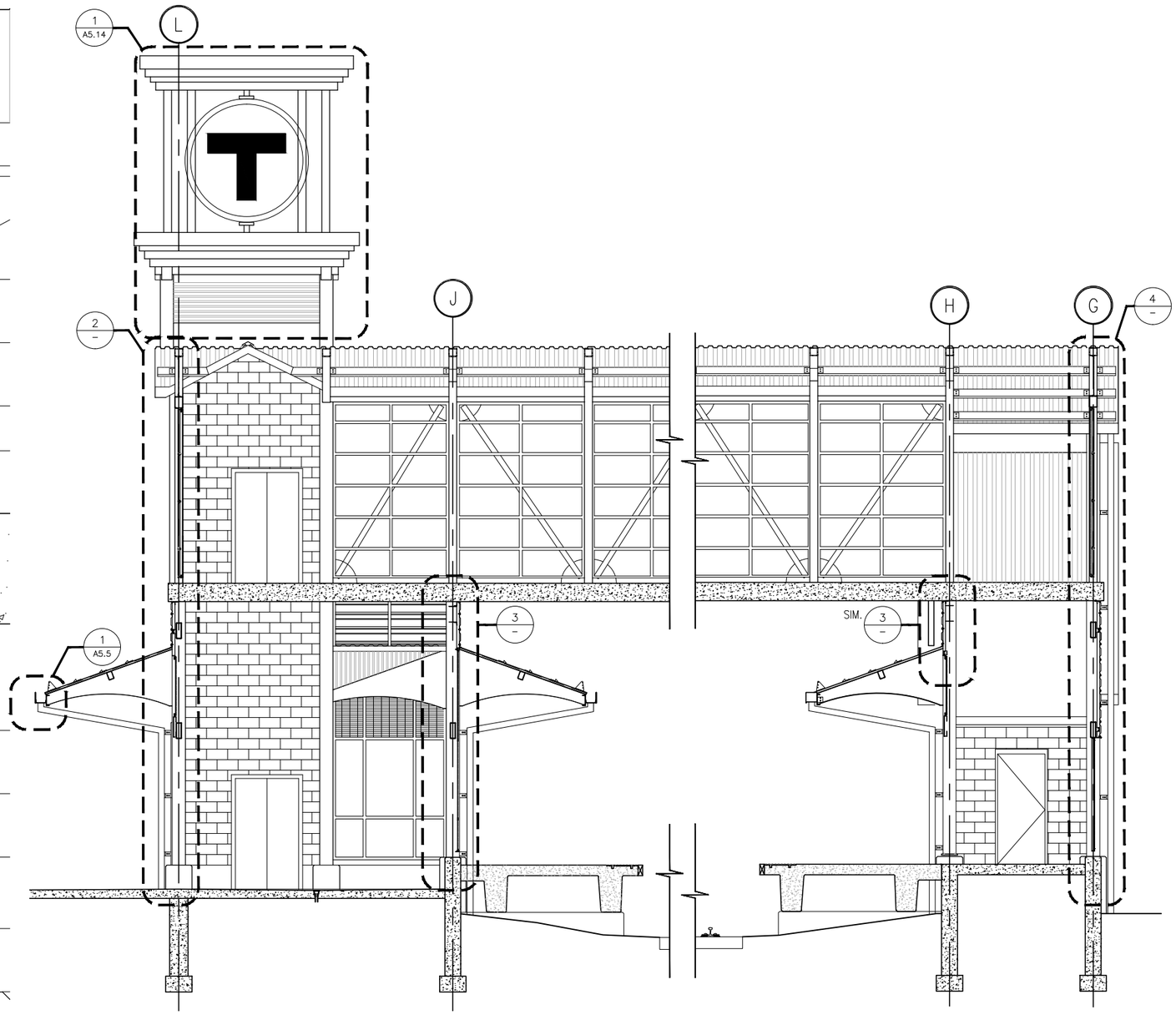

1 SECTION
1/4" = 1'-0"

0 2' 4' 8'
SCALE: 1/4" = 1'-0"

0 4" 8" 1'-4"
SCALE: 1 1/2" = 1'-0"

90% SUBMITTAL
NOT FOR CONSTRUCTION

ISSUE	DATE	DESCRIPTION	BY	CHKD.	APP.

PROJECT MANAGER Date

Lozano, Baskin, and Associates, Inc.
Architecture•Urban Design•City Planning
205 Mt. Auburn St. Watertown, MA 02472

MASSACHUSETTS BAY TRANSPORTATION AUTHORITY

FITCHBURG COMMUTER RAIL LINE
IMPROVEMENT PROJECT
CONTRACT NO. G67PS01

SOUTH ACTON STATION
BUILDING SECTIONS
HEAD HOUSES

HNTB
300 APOLLO DRIVE
CHELMSFORD, MA 01824
(978) 905-4000

MASSACHUSETTS BAY TRANSPORTATION AUTHORITY
APPROVED BY:
PROJECT MANAGER Date

HORIZ: N/A	DES. BY	DR. BY	CHK. BY
VERT: N/A	MB	DW	MB
DATE: 09/08/11	DW		

PLAN NO.
SHEET A-4.6
ISSUE

FILE NAME: C:\Documents and Settings\Mackintosh LBA\local settings\temp\AcPublish_1604\ 03 A-SE0001.dwg
PLOT DATE: Sep 02, 2011 - 8:17am

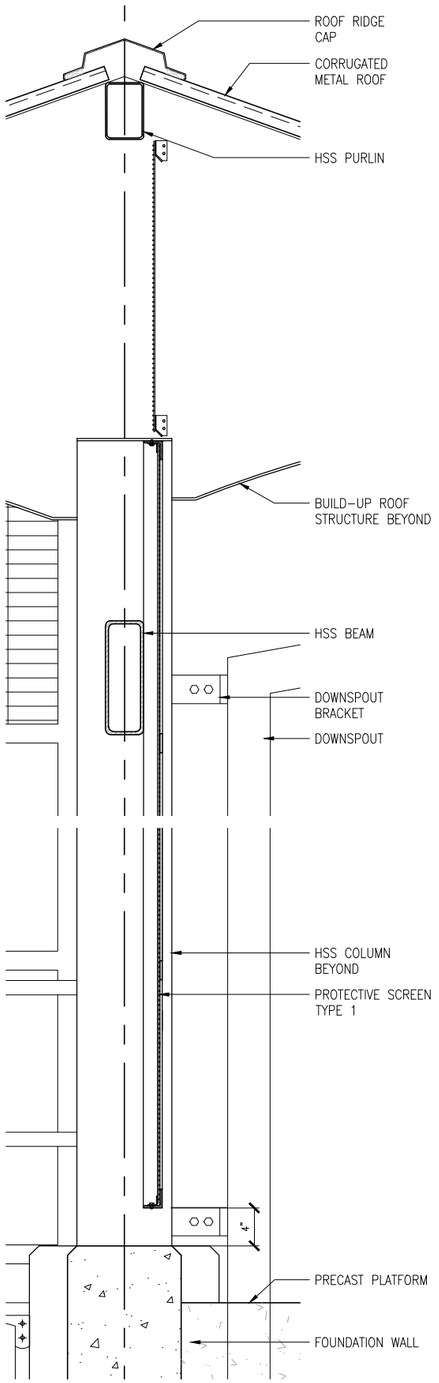

3 WALL SECTION
1-1/2" = 1'-0"

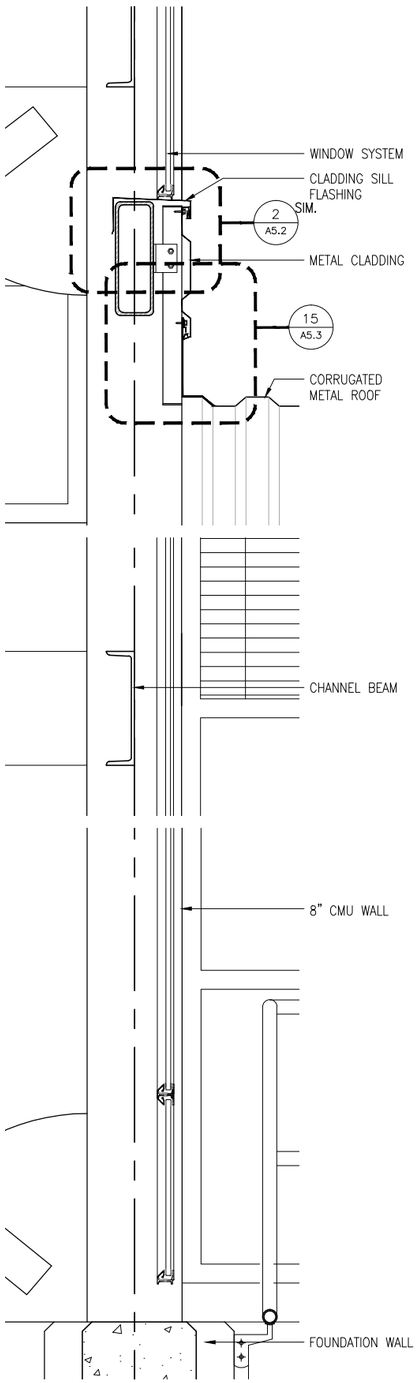

3 WALL SECTION
1-1/2" = 1'-0"

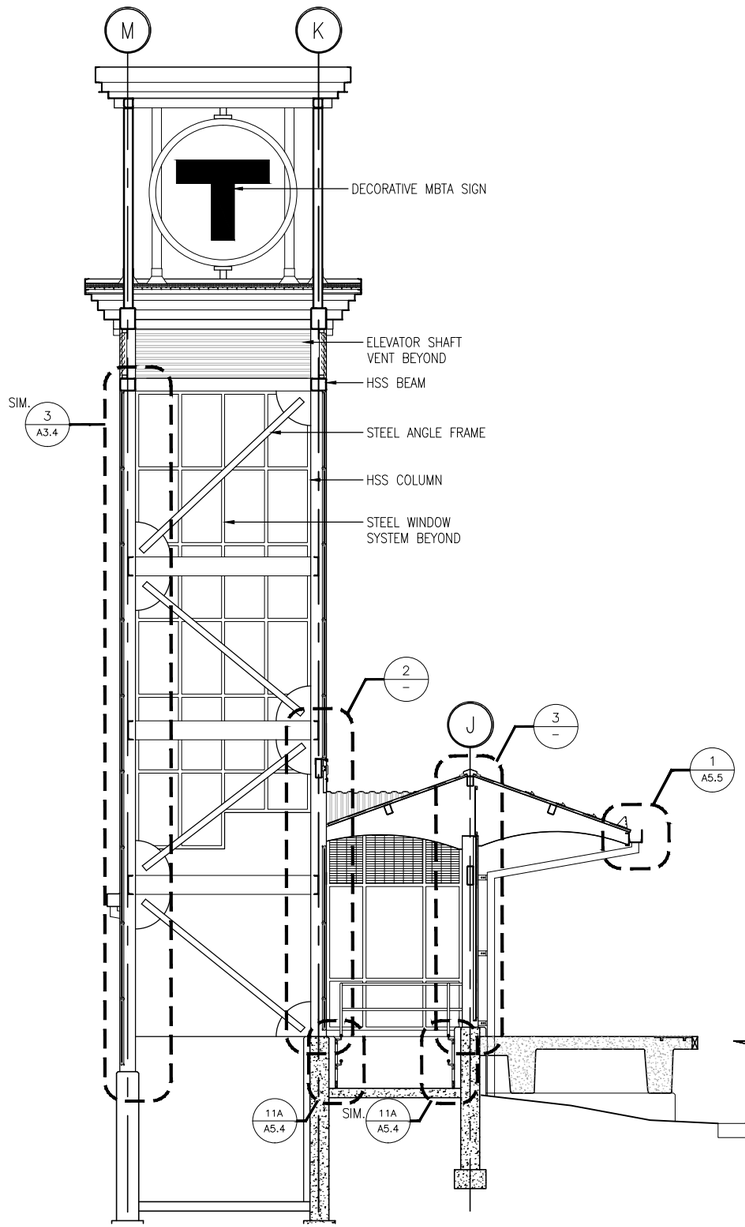

1 SECTION
1/4" = 1'-0"

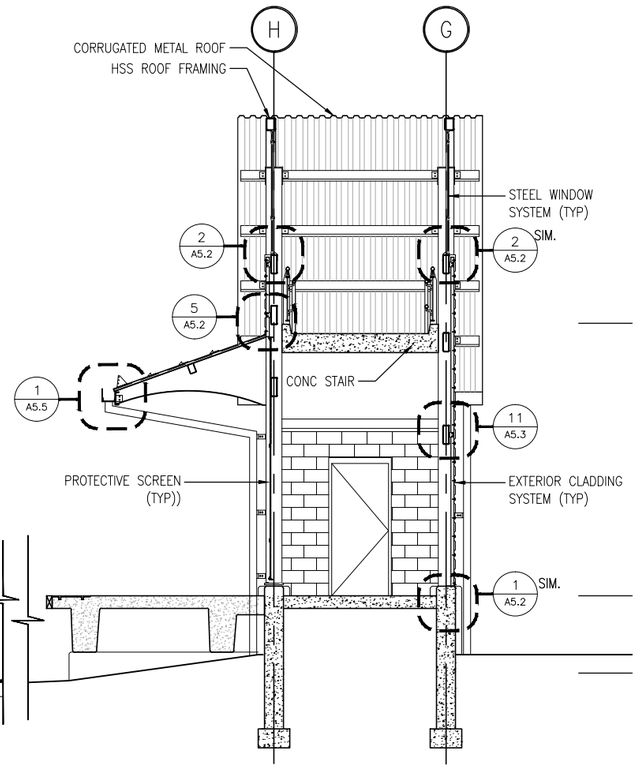

90% SUBMITTAL
NOT FOR CONSTRUCTION

SCALE: 1/4" = 1'-0"

SCALE: 1 1/2" = 1'-0"

ISSUE	DATE	DESCRIPTION	BY	CHKD.	APP.

Lozano, Baskin, and Associates, Inc.
Architecture•Urban Design•City Planning
205 Mt. Auburn St. Watertown, MA 02472

MASSACHUSETTS BAY TRANSPORTATION AUTHORITY

FITCHBURG COMMUTER RAIL LINE
IMPROVEMENT PROJECT
CONTRACT NO. G67PS01

SOUTH ACTON STATION
BUILDING SECTIONS
HEAD HOUSES

HNTB
300 APOLLO DRIVE
CHELMSFORD, MA 01824
(978) 905-4000

PROJECT MANAGER Date

MASSACHUSETTS BAY TRANSPORTATION AUTHORITY
APPROVED BY:
PROJECT MANAGER Date

HORIZ: N/A	DES. BY	DR. BY	CHK. BY	PLAN NO.	ISSUE
VERT: N/A	MB DW	DW	MB		
DATE: 09/08/11				SHEET A-4.7	

FILE NAME: C:\Documents and Settings\Mackintosh LBA\Local settings\Temp\AcPublish_1604\ 03 A-SE0001.dwg
PLOT DATE: Sep 02, 2011 - 8:17am

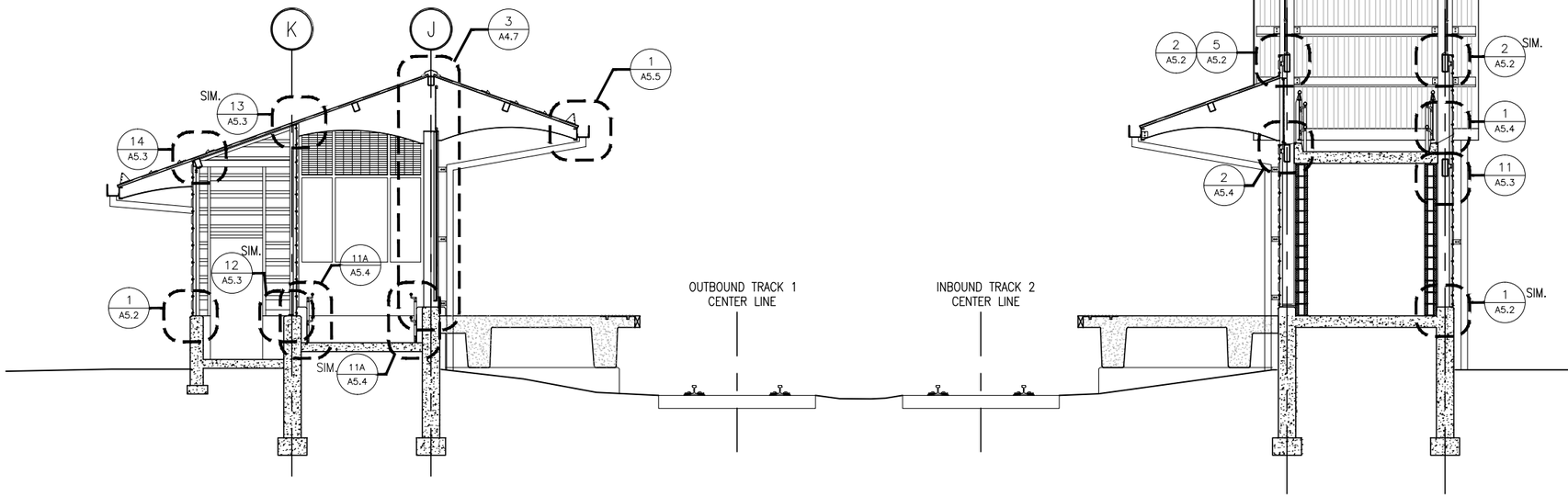

1 SECTION
1/4" = 1'-0"

0 2 4 8

SCALE: 1/4" = 1'-0"

90% SUBMITTAL
NOT FOR CONSTRUCTION

FILE NAME: C:\Documents and Settings\Mackintosh LBA\local settings\temp\AcPublish_1604\ 03 A-SE0001.dwg
PLOT DATE: Sep 02, 2011 - 8:17am

ISSUE	DATE	DESCRIPTION	BY	CHKD.	APP.

MASSACHUSETTS BAY TRANSPORTATION AUTHORITY

FITCHBURG COMMUTER RAIL LINE
IMPROVEMENT PROJECT
CONTRACT NO. G67PS01

SOUTH ACTON STATION
BUILDING SECTIONS
HEAD HOUSES

HNTB
300 APOLLO DRIVE
CHELMSFORD, MA 01824
(978) 905-4000

Lozano, Baskin, and Associates, Inc.
Architecture•Urban Design•City Planning
205 Mt. Auburn St. Watertown, MA 02472

MASSACHUSETTS BAY TRANSPORTATION AUTHORITY
APPROVED BY:
PROJECT MANAGER Date
PROJECT MANAGER Date

HORIZ: N/A	DES. BY	DR. BY	CHK. BY	PLAN NO.	ISSUE
VERT: N/A	MB DW	DW	MB		
DATE: 09/08/11				SHEET A-4.8	

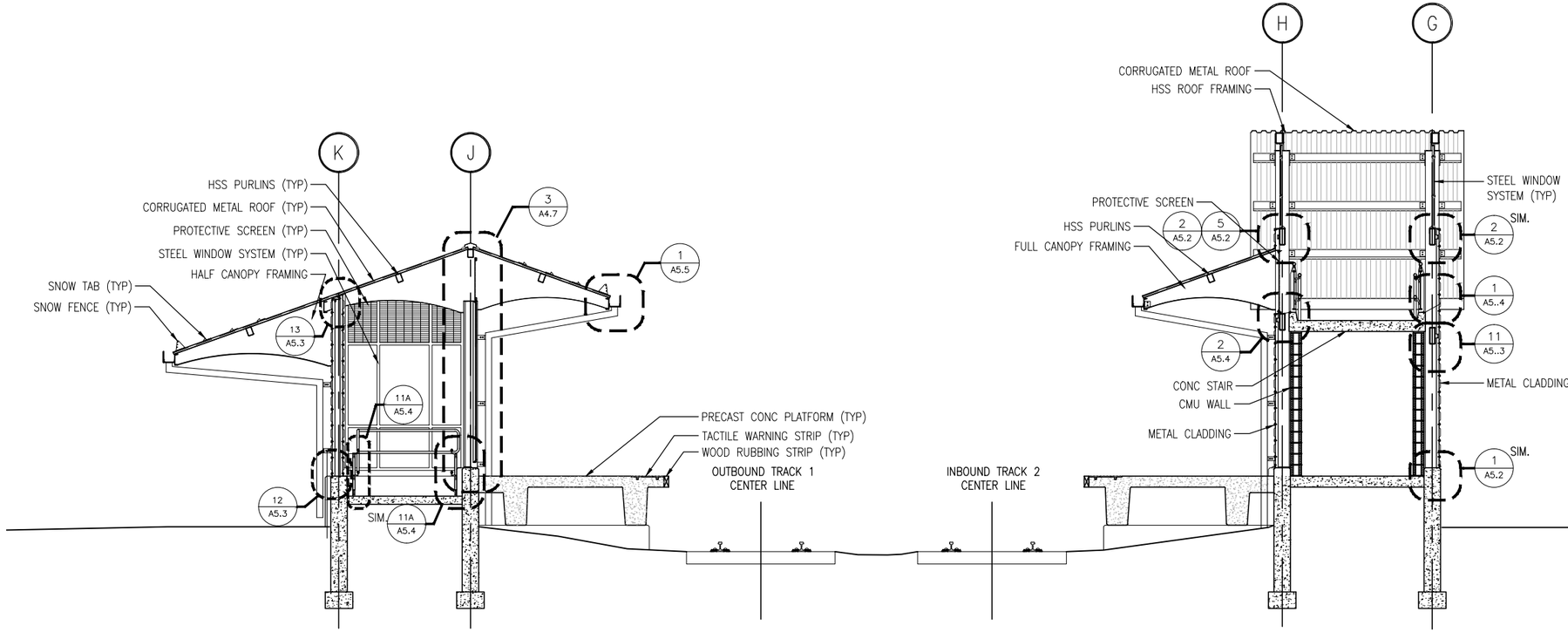

1 SECTION
1/4" = 1'-0"

0 2 4 8
SCALE: 1/4" = 1'-0"

90% SUBMITTAL
NOT FOR CONSTRUCTION

FILE NAME: C:\Documents and Settings\Mackintosh LBA\local settings\temp\AcPublish_1604\ 03 A-SE0001.dwg
PLOT DATE: Sep 02, 2011 - 8:17am

ISSUE	DATE	DESCRIPTION	BY	CHKD.	APP.

MASSACHUSETTS BAY TRANSPORTATION AUTHORITY

FITCHBURG COMMUTER RAIL LINE
IMPROVEMENT PROJECT
CONTRACT NO. G67PS01

SOUTH ACTON STATION
BUILDING SECTIONS
HEAD HOUSES

HNTB
300 APOLLO DRIVE
CHELMSFORD, MA 01824
(978) 905-4000

Lozano, Baskin, and Associates, Inc.
Architecture•Urban Design•City Planning
205 Mt. Auburn St. Watertown, MA 02472

MASSACHUSETTS BAY TRANSPORTATION AUTHORITY
APPROVED BY:

PROJECT MANAGER Date
PROJECT MANAGER Date

HORIZ: N/A	DES. BY	DR. BY	CHK. BY	PLAN NO.	ISSUE
VERT: N/A	MB	DW	MB		
DATE: 09/08/11	DW			SHEET A-4.9	

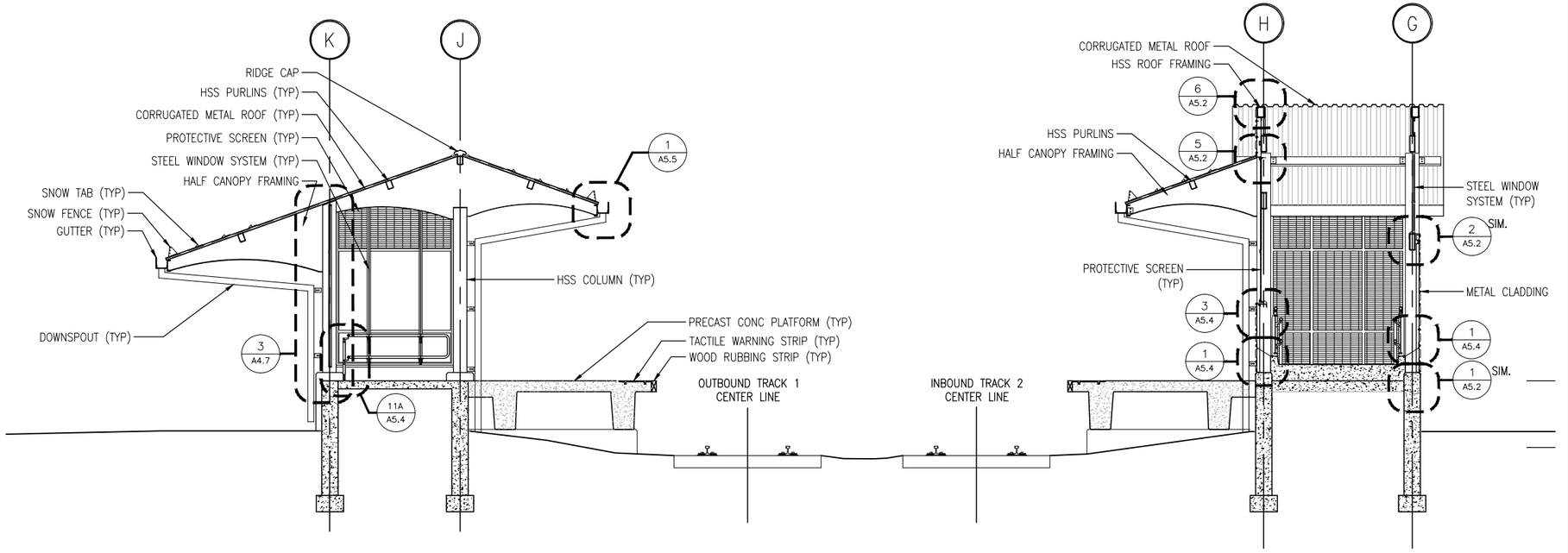

1 SECTION
1/4" = 1'-0"

0 2 4 8
SCALE: 1/4" = 1'-0"

90% SUBMITTAL
NOT FOR CONSTRUCTION

FILE NAME: C:\Documents and Settings\Mackintosh LBA\Local Settings\Temp\AcPublish_1604\ 03 A-SE0001.dwg
PLOT DATE: Sep 02, 2011 - 8:18am

MASSACHUSETTS BAY TRANSPORTATION AUTHORITY

FITCHBURG COMMUTER RAIL LINE
IMPROVEMENT PROJECT
CONTRACT NO. G67PS01

SOUTH ACTON STATION
BUILDING SECTIONS
HEAD HOUSES

ISSUE	DATE	DESCRIPTION	BY	CHKD.	APP.

HNTB
300 APOLLO DRIVE
CHELMSFORD, MA 01824
(978) 905-4000

PROJECT MANAGER Date

MASSACHUSETTS BAY TRANSPORTATION AUTHORITY
APPROVED BY:
PROJECT MANAGER Date

Lozano, Baskin, and Associates, Inc.
Architecture•Urban Design•City Planning
205 Mt. Auburn St. Watertown, MA 02472

HORIZ: N/A	DES. BY	DR. BY	CHK. BY	PLAN NO.	ISSUE
VERT: N/A	MB	DW	MB		
DATE: 09/08/11	DW			SHEET A-4.10	

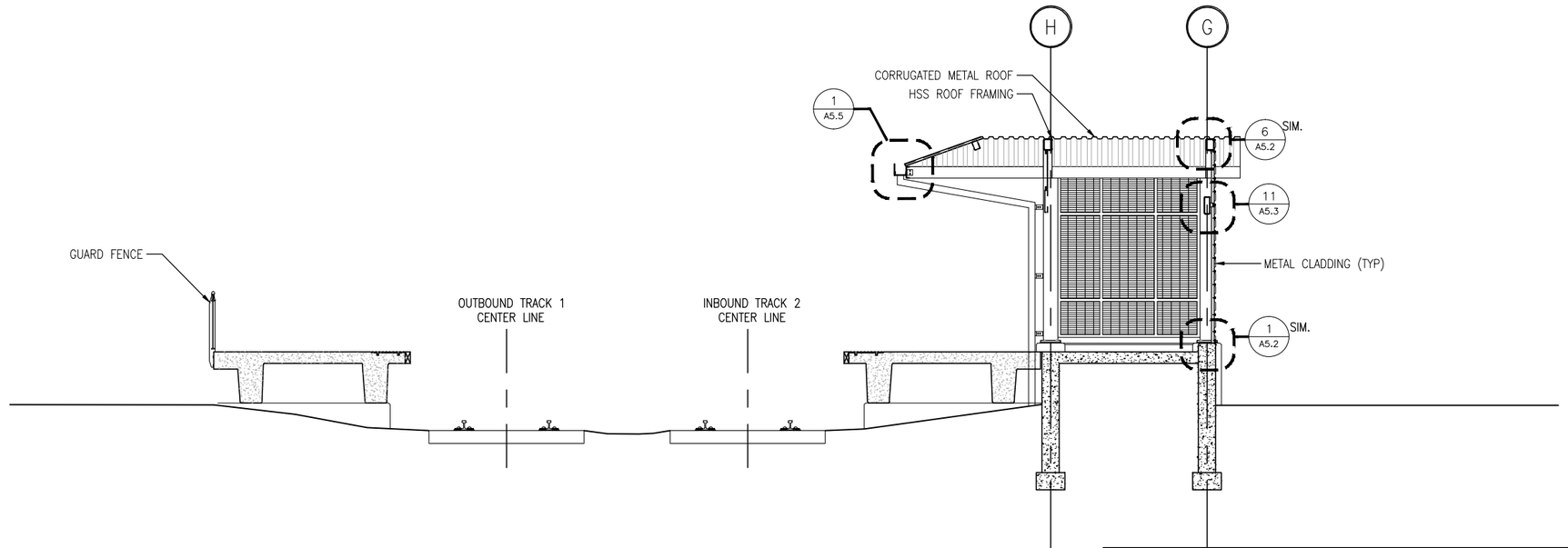

1 SECTION
1/4" = 1'-0"

0 2 4 8
SCALE: 1/4" = 1'-0"

90% SUBMITTAL
NOT FOR CONSTRUCTION

FILE NAME: C:\Documents and Settings\Mackintosh LBA\local settings\temp\AcPublish_1604\ 03 A-SE0001.dwg
PLOT DATE: Sep 02, 2011 - 8:18am

ISSUE	DATE	DESCRIPTION	BY	CHKD.	APP.

Lozano, Baskin, and Associates, Inc.
Architecture•Urban Design•City Planning
205 Mt. Auburn St. Watertown, MA 02472

MASSACHUSETTS BAY TRANSPORTATION AUTHORITY

FITCHBURG COMMUTER RAIL LINE
IMPROVEMENT PROJECT
CONTRACT NO. G67PS01

SOUTH ACTON STATION
BUILDING SECTIONS
HEAD HOUSES

HNTB
300 APOLLO DRIVE
CHELMSFORD, MA 01824
(978) 905-4000

PROJECT MANAGER Date

MASSACHUSETTS BAY TRANSPORTATION AUTHORITY
APPROVED BY:
PROJECT MANAGER Date

HORIZ: N/A	DES. BY	DR. BY	CHK. BY	PLAN NO.	ISSUE
VERT: N/A	MB	DW	MB		
DATE: 09/08/11	DW			SHEET A-4.11	

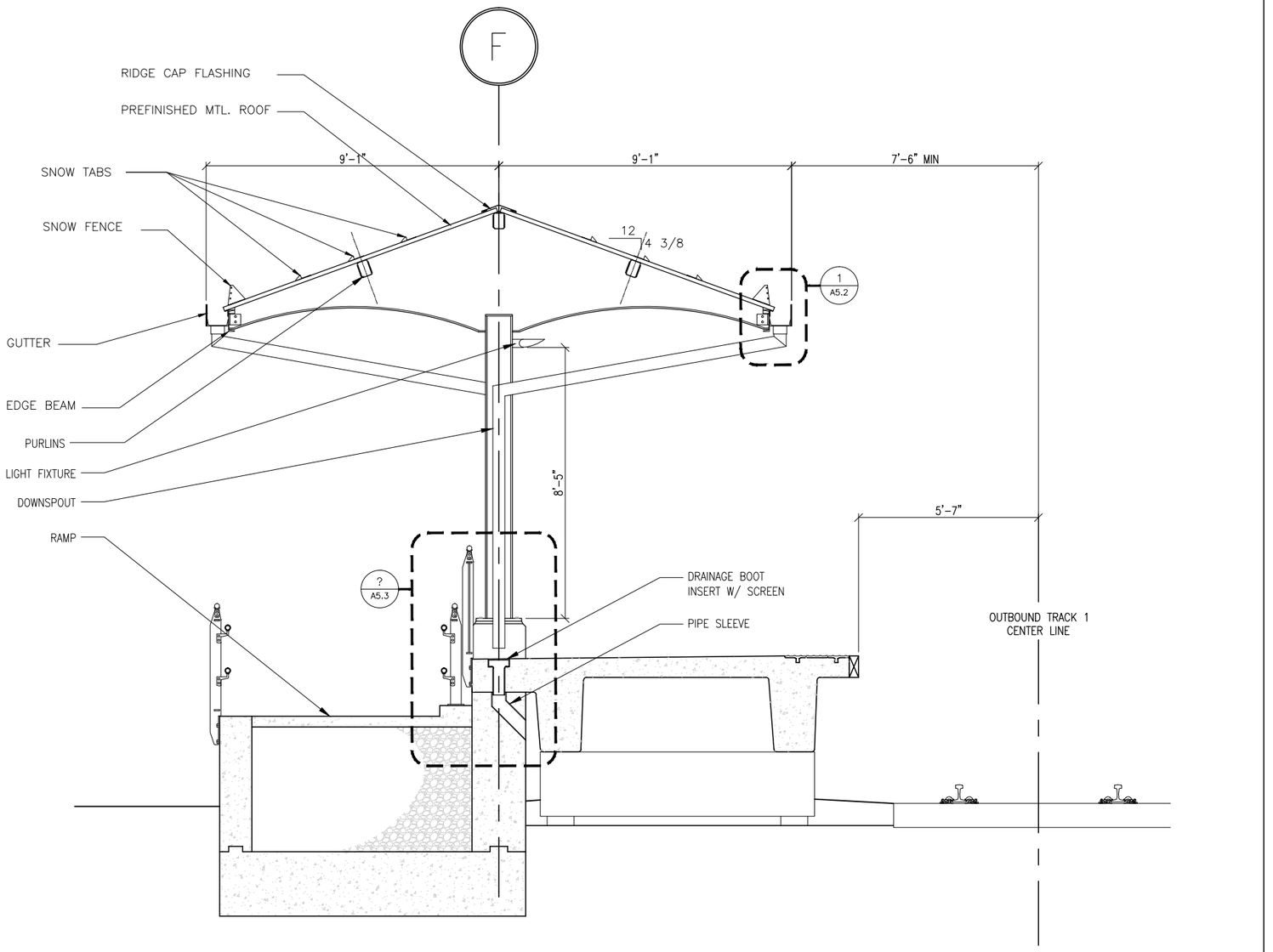

1 SECTION
1/2" = 1'-0"

0 1 2 4
SCALE: 1/2" = 1'-0"

90% SUBMITTAL
NOT FOR CONSTRUCTION

FILE NAME: C:\Documents and Settings\Mackintosh LBA\Local Settings\Temp\AcPublish_1604\03 A-SE0001.dwg
PLOT DATE: Sep 02, 2011 - 8:18am

MASSACHUSETTS BAY TRANSPORTATION AUTHORITY
FITCHBURG COMMUTER RAIL LINE
IMPROVEMENT PROJECT
CONTRACT NO. G67PS01

SOUTH ACTON STATION
OUTBOUND CANOPY
SECTION

ISSUE	DATE	DESCRIPTION	BY	CHKD.	APP.

HNTB
300 APOLLO DRIVE
CHELMSFORD, MA 01824
(978) 905-4000

Lozano, Baskin, and Associates, Inc.
Architecture • Urban Design • City Planning
205 Mt. Auburn St. Watertown, MA 02472

MASSACHUSETTS BAY TRANSPORTATION AUTHORITY
APPROVED BY:

PROJECT MANAGER Date
PROJECT MANAGER Date

HORIZ: N/A	DES. BY	DR. BY	CHK. BY	PLAN NO.	ISSUE
VERT: N/A	MB	DW	MB		
DATE: 09/08/11	DW			SHEET A-4.12	

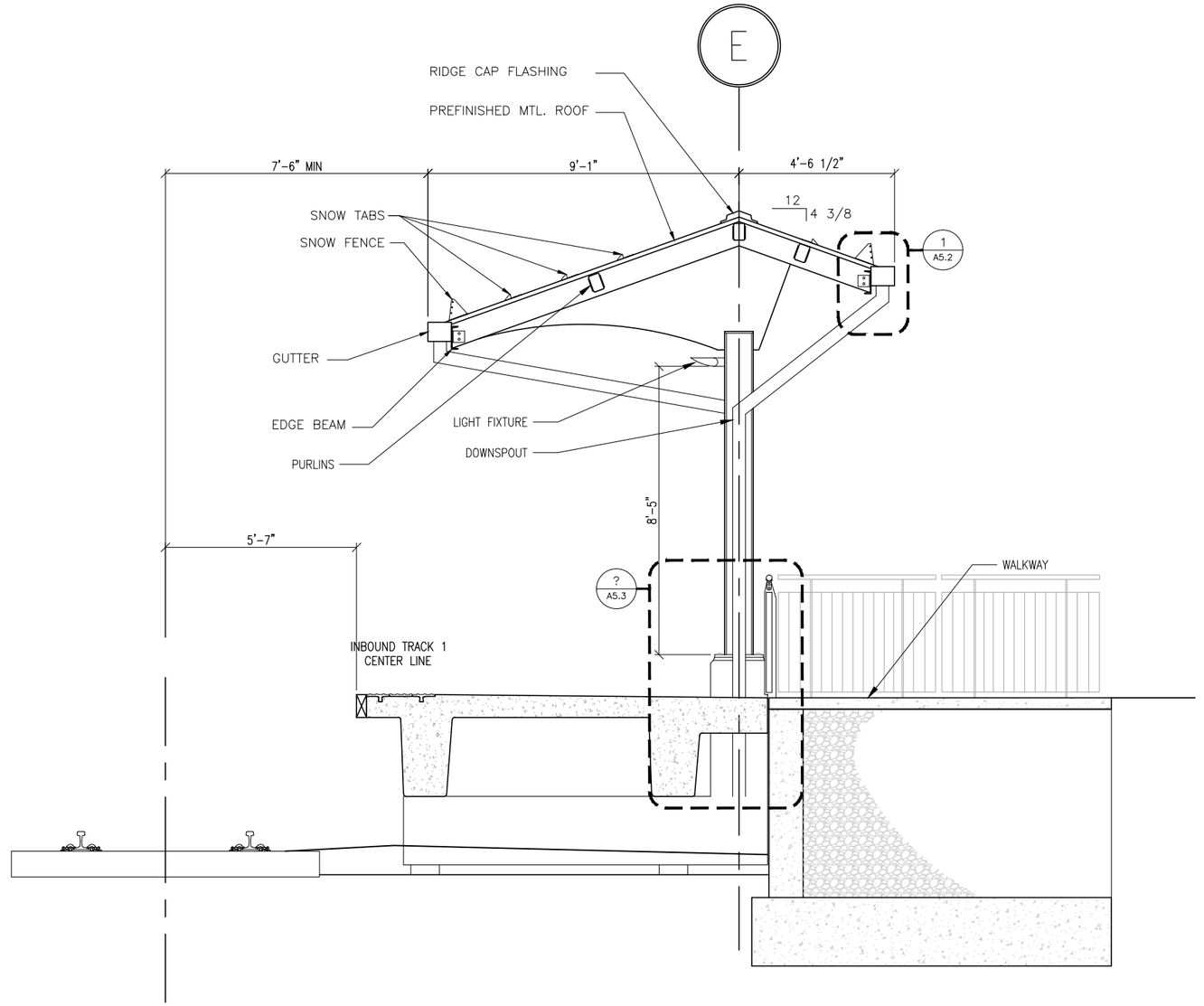

1 SECTION
1/2" = 1'-0"

0 1 2 4
SCALE: 1/2" = 1'-0"

90% SUBMITTAL
NOT FOR CONSTRUCTION

FILE NAME: C:\Documents and Settings\Mackintosh LBA\local settings\temp\AcPublish_2040\ 03 A-SE0001.dwg
PLOT DATE: Sep 07, 2011 - 10:19am

MASSACHUSETTS BAY TRANSPORTATION AUTHORITY
FITCHBURG COMMUTER RAIL LINE
IMPROVEMENT PROJECT
CONTRACT NO. G67PS01

SOUTH ACTON STATION
INBOUND CANOPY
SECTION

ISSUE	DATE	DESCRIPTION	BY	CHKD.	APP.

HNTB
300 APOLLO DRIVE
CHELMSFORD, MA 01824
(978) 905-4000

Lozano, Baskin, and Associates, Inc.
Architecture • Urban Design • City Planning
205 Mt. Auburn St. Watertown, MA 02472

MASSACHUSETTS BAY TRANSPORTATION AUTHORITY
APPROVED BY:
PROJECT MANAGER Date
PROJECT MANAGER Date

HORIZ: N/A	DES. BY	DR. BY	CHK. BY	PLAN NO.	ISSUE
VERT: N/A	MB	DW	MB		
DATE: 09/08/11	DW			SHEET A-4.13	

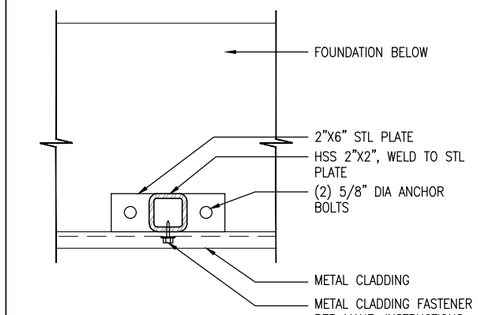

1 DETAIL: METAL CLADDING SUPPORT
3" = 1'-0"

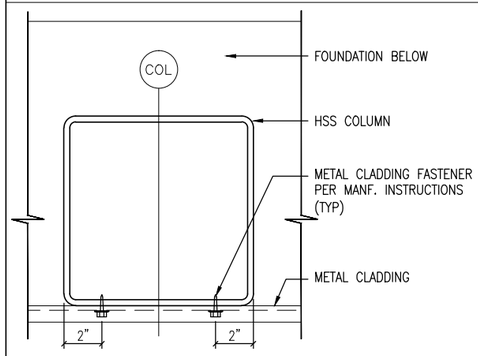

2 DETAIL: METAL CLADDING @ COL.
3" = 1'-0"

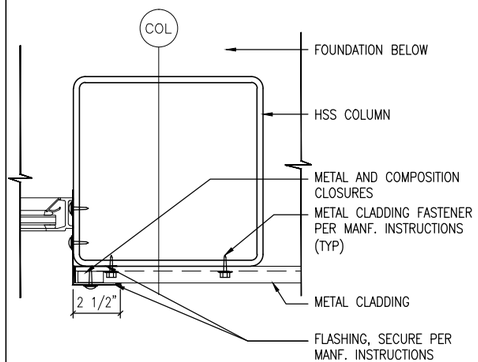

3 DETAIL:METAL CLADDING CLOSURE
3" = 1'-0"

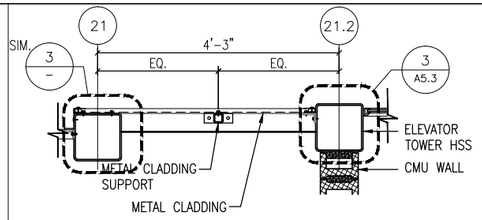

G WALL TYPE: EXTERIOR
3/4"=1'-0"

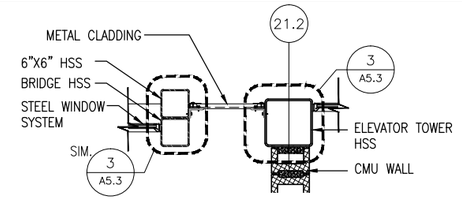

H WALL TYPE: EXTERIOR
3/4"=1'-0"

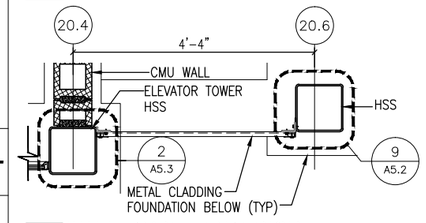

J WALL TYPE: EXTERIOR
3/4"=1'-0"

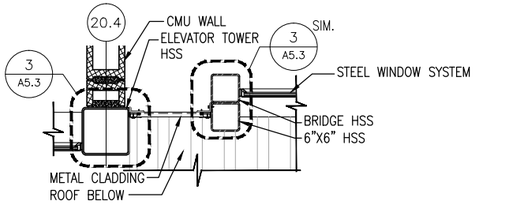

K WALL TYPE: EXTERIOR
3/4"=1'-0"

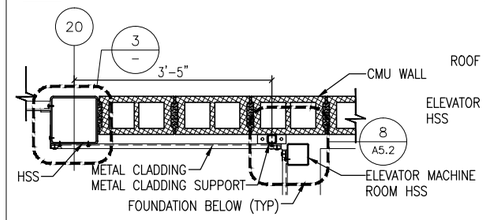

L WALL TYPE: EXTERIOR
3/4"=1'-0"

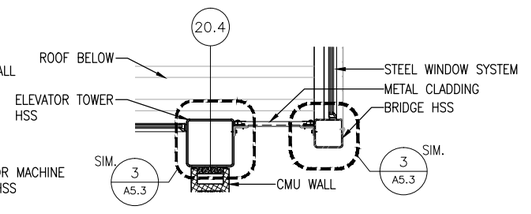

M WALL TYPE: EXTERIOR
3/4"=1'-0"

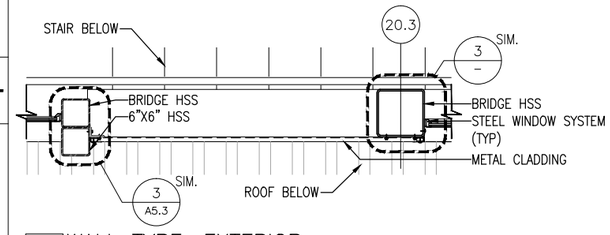

N WALL TYPE: EXTERIOR
3/4"=1'-0"

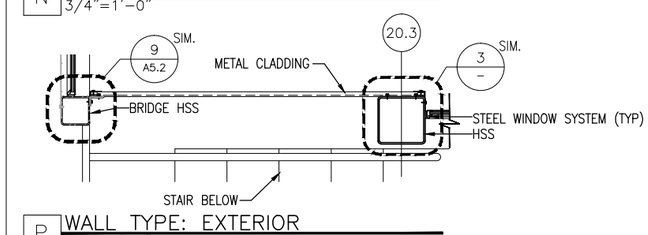

P WALL TYPE: EXTERIOR
3/4"=1'-0"

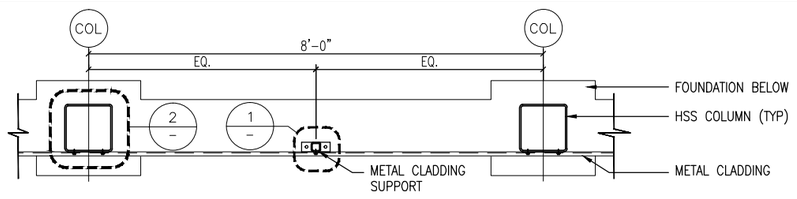

A WALL TYPE: EXTERIOR
3/4"=1'-0"

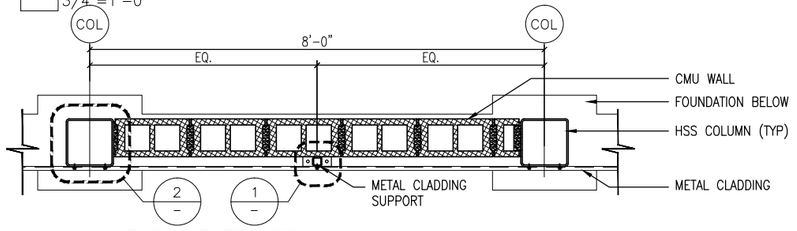

B WALL TYPE: EXTERIOR
3/4"=1'-0"

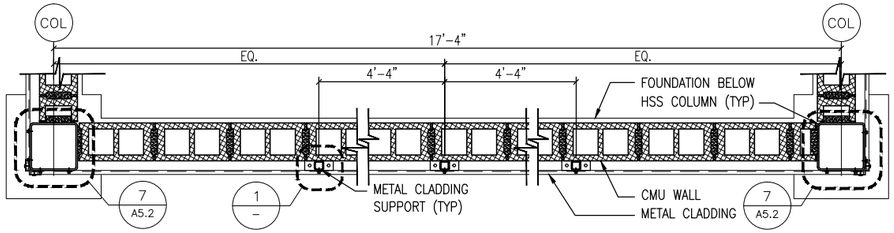

C WALL TYPE: EXTERIOR
3/4"=1'-0"

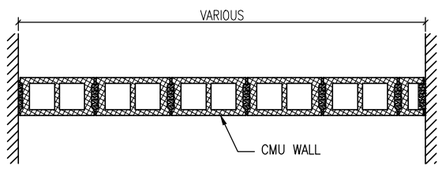

D WALL TYPE: INTERIOR
3/4"=1'-0"

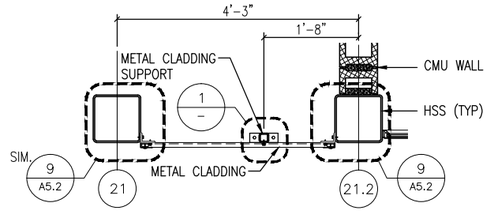

E WALL TYPE: EXTERIOR
3/4"=1'-0"

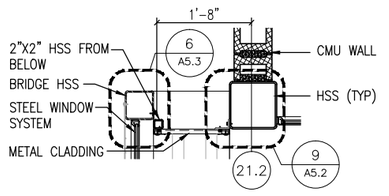

F WALL TYPE: EXTERIOR
3/4"=1'-0"

0 4" 8" 1'-4"
SCALE: 3/4" = 1'-0"

0 1" 2" 4"
SCALE: 3" = 1'-0"

90% SUBMITTAL
NOT FOR CONSTRUCTION

ISSUE	DATE	DESCRIPTION	BY	CHKD.	APP.

Lozano, Baskin, and Associates, Inc.
Architecture•Urban Design•City Planning
205 Mt. Auburn St. Watertown, MA 02472

MASSACHUSETTS BAY TRANSPORTATION AUTHORITY

FITCHBURG COMMUTER RAIL LINE
IMPROVEMENT PROJECT
CONTRACT NO. G67PS01

SOUTH ACTON STATION
DETAILS
WALL SYSTEMS

HNTB
300 APOLLO DRIVE
CHELMSFORD, MA 01824
(978) 905-4000

PROJECT MANAGER Date

MASSACHUSETTS BAY TRANSPORTATION AUTHORITY
APPROVED BY:
PROJECT MANAGER Date

HORIZ: N/A	DES. BY	DR. BY	CHK. BY	PLAN NO.	ISSUE
VERT: N/A	MB DW	DW	MB		
DATE: 09/08/11				SHEET A-5.1	

FILE NAME: C:\Documents and Settings\Mackintosh LBA\local settings\temp\AcPublish_1604\ 04 A-DE0001.dwg
PLOT DATE: Sep 02, 2011 - 8:18am

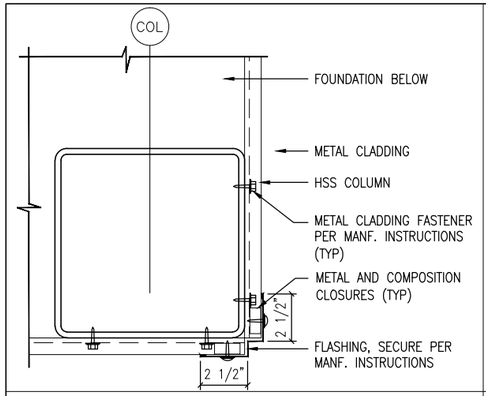

7 DETAIL: METAL CLADDING CORNER
3" = 1'-0"

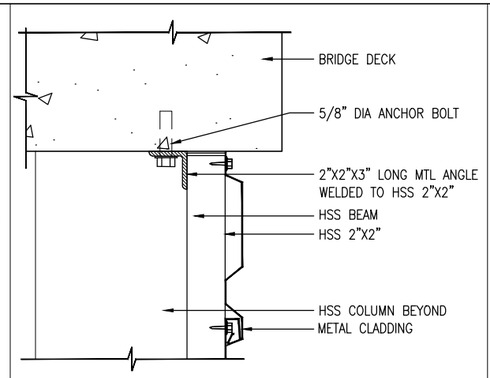

4 DETAIL:METAL CLADDING @ BRIDGE
3" = 1'-0"

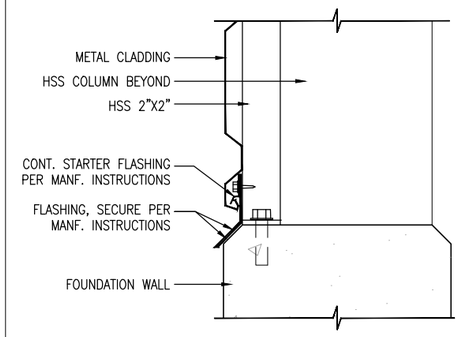

1 DETAIL:METAL CLADDING @ BASE
3" = 1'-0"

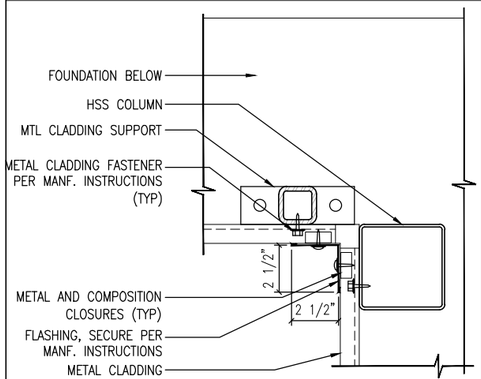

8 DETAIL: METAL CLADDING CORNER
3" = 1'-0"

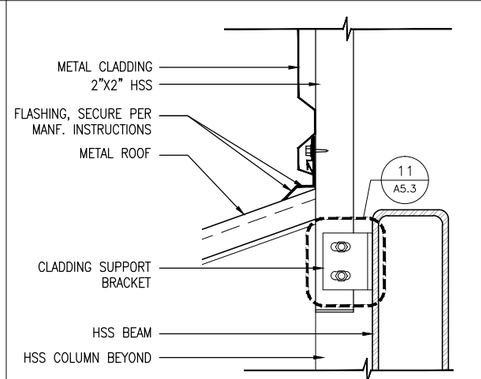

5 DETAIL:METAL CLADDING @ CANOPY
3" = 1'-0"

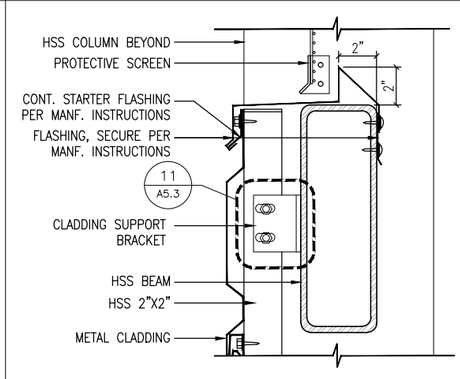

2 DETAIL:METAL CLADDING @ SILL
3" = 1'-0"

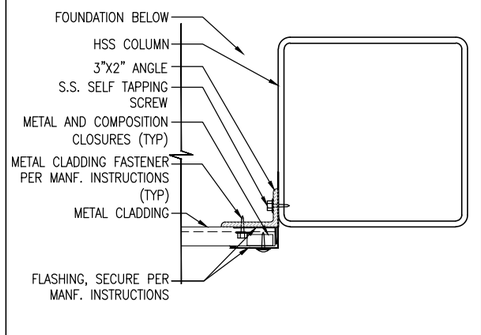

9 DETAIL: METAL CLADDING @ HSS COL
3" = 1'-0"

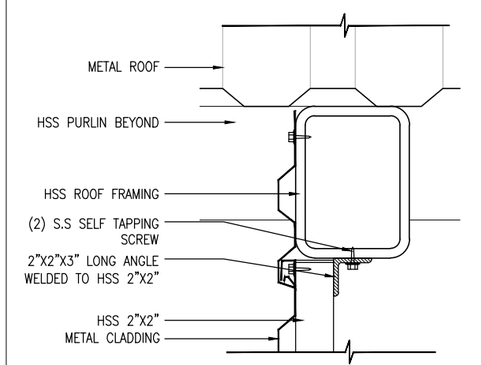

6 DETAIL:METAL CLADDING @ ROOF
3" = 1'-0"

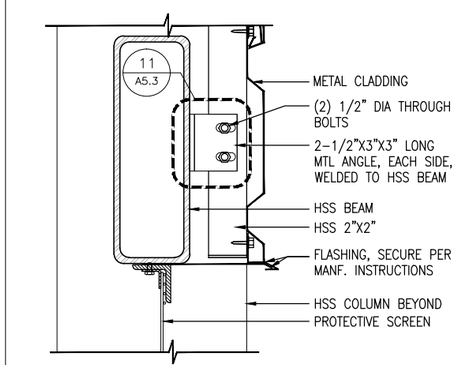

3 DETAIL:METAL CLADDING @ HEAD
3" = 1'-0"

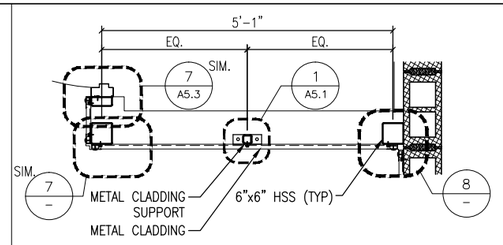

R WALL TYPE: EXTERIOR
3/4"=1'-0"

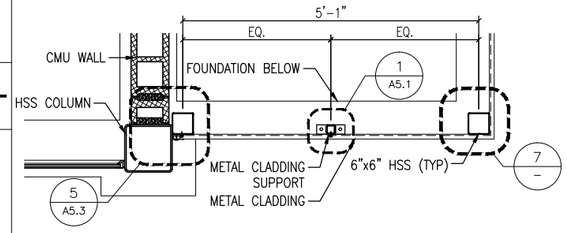

T WALL TYPE: EXTERIOR
3/4"=1'-0"

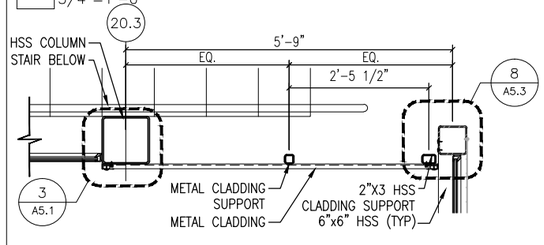

V WALL TYPE: EXTERIOR
3/4"=1'-0"

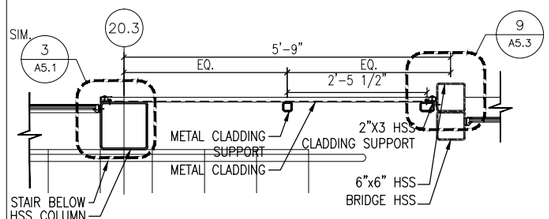

W WALL TYPE: EXTERIOR
3/4"=1'-0"

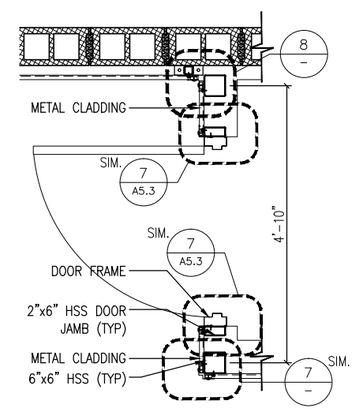

S WALL TYPE: EXTERIOR
3/4"=1'-0"

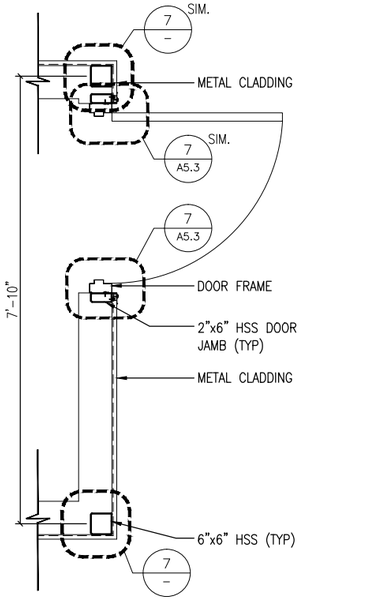

U WALL TYPE: EXTERIOR
3/4"=1'-0"

0 4" 8" 1'-4"
SCALE: 3/4" = 1'-0"

0 1" 2" 4"
SCALE: 3" = 1'-0"

90% SUBMITTAL
NOT FOR CONSTRUCTION

ISSUE	DATE	DESCRIPTION	BY	CHKD.	APP.

Lozano, Baskin, and Associates, Inc.
Architecture•Urban Design•City Planning
205 Mt. Auburn St. Watertown, MA 02472

HNTB
300 APOLLO DRIVE
CHELMSFORD, MA 01824
(978) 905-4000

MASSACHUSETTS BAY TRANSPORTATION AUTHORITY

FITCHBURG COMMUTER RAIL LINE
IMPROVEMENT PROJECT
CONTRACT NO. G67PS01

SOUTH ACTON STATION
DETAILS
WALL SYSTEMS

MASSACHUSETTS BAY TRANSPORTATION AUTHORITY
APPROVED BY:

PROJECT MANAGER Date

PROJECT MANAGER Date

HORIZ: N/A	DES. BY	DR. BY	CHK. BY	PLAN NO.	ISSUE
VERT: N/A	MB DW	DW	MB		
DATE: 09/08/11				SHEET A-5.2	

FILE NAME: C:\Documents and Settings\Mackintosh LBA\local settings\temp\AcPublish_1604\ 04 A-DE0001.dwg
PLOT DATE: Sep 02, 2011 - 8:18am

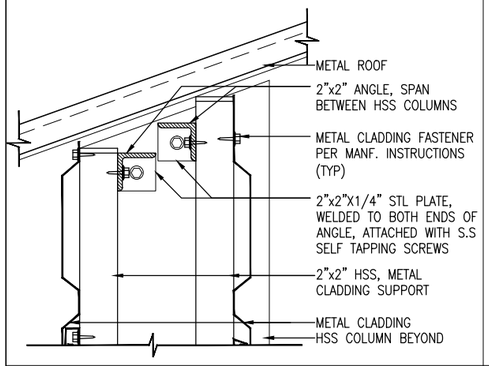

13 DETAIL: METAL CLADDING @ ROOF
3" = 1'-0"

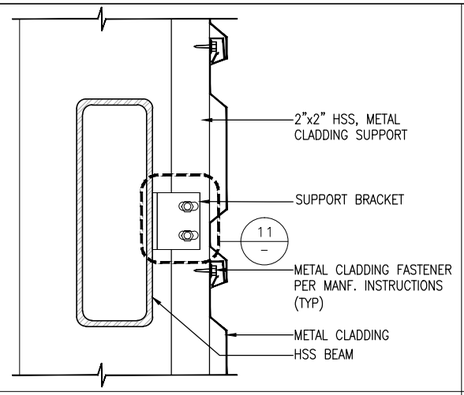

10 DETAIL: METAL CLADDING SUPPORT
3" = 1'-0"

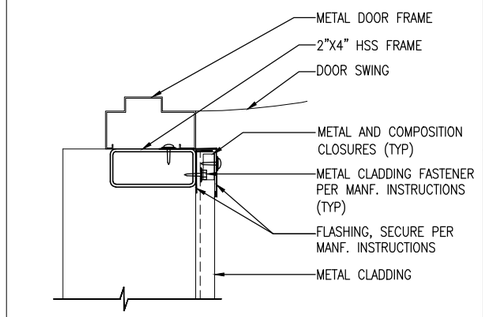

7 DETAIL: METAL CLADDING @ DOOR
3" = 1'-0"

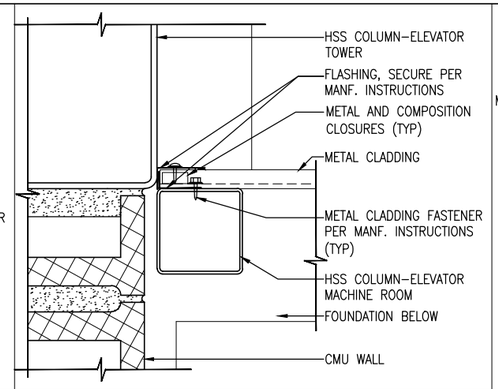

4 DETAIL: METAL CLADDING @ HSS COL
3" = 1'-0"

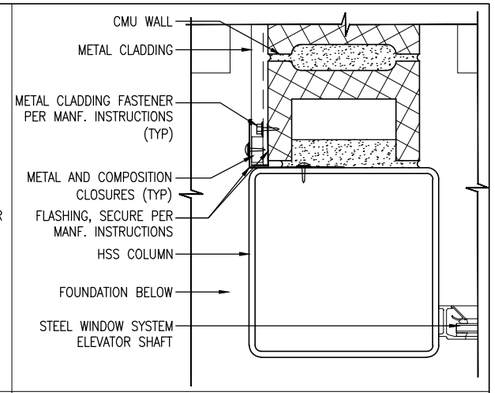

1 DETAIL: METAL CLADDING @ HSS COL
3" = 1'-0"

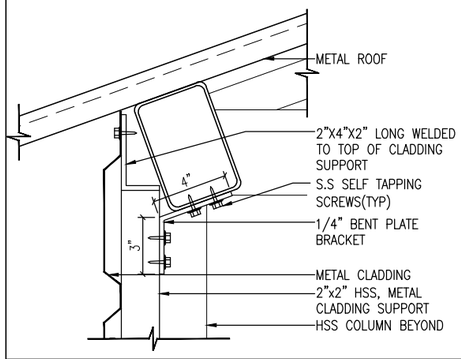

14 DETAIL: METAL CLADDING @ ROOF
3" = 1'-0"

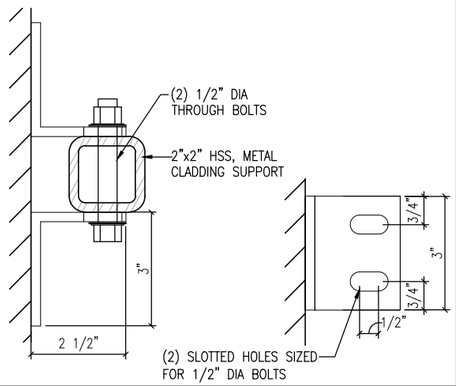

11 DETAIL: SUPPORT BRACKET
3" = 1'-0"

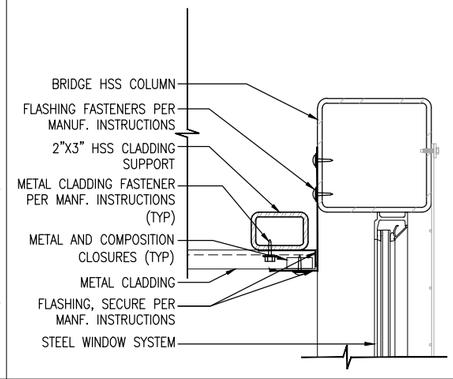

8 DETAIL: METAL CLADDING @ BRIDGE
3" = 1'-0"

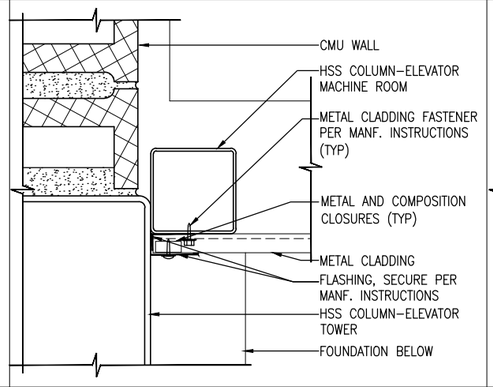

5 DETAIL: METAL CLADDING @ HSS COL
3" = 1'-0"

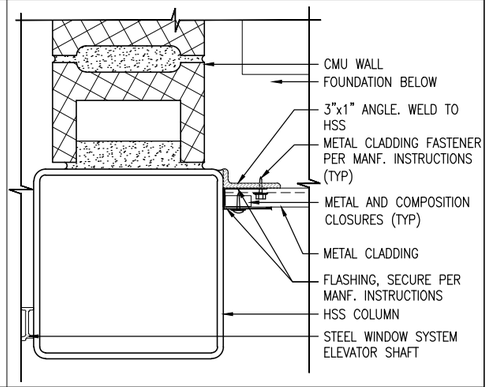

2 DETAIL: METAL CLADDING @ HSS COL
3" = 1'-0"

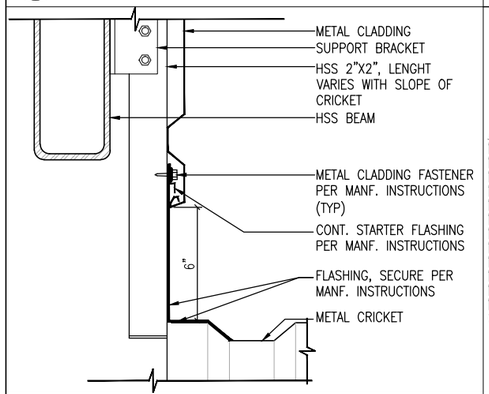

15 DETAIL: METAL CLADDING @ CRICKET
3" = 1'-0"

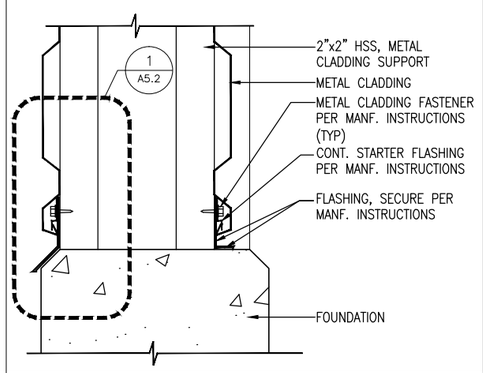

12 DETAIL: METAL CLADDING @ BASE
3" = 1'-0"

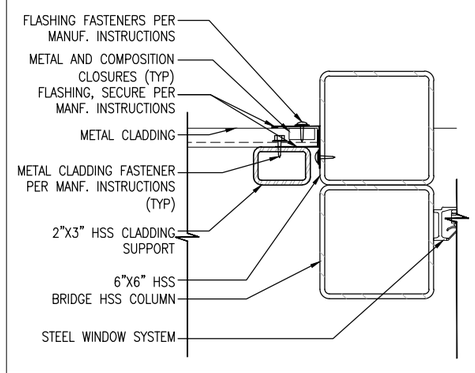

9 DETAIL: METAL CLADDING @ BRIDGE
3" = 1'-0"

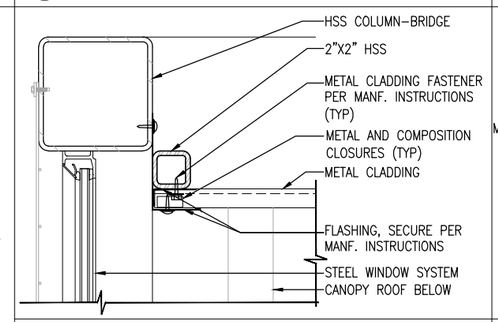

6 DETAIL: METAL CLADDING @ BRIDGE
3" = 1'-0"

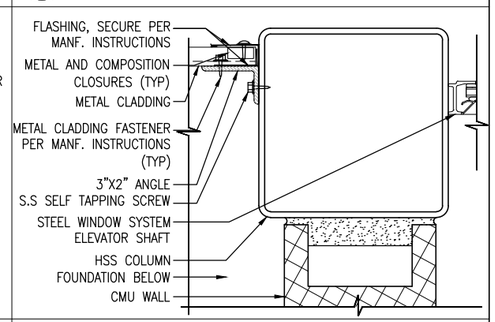

3 DETAIL: METAL CLADDING @ HSS COL
3" = 1'-0"

FILE NAME: C:\Documents and Settings\Mackintosh LBA\local settings\temp\AcPublish_1604\ 04 A-DE0001.dwg
PLOT DATE: Sep 02, 2011 - 8:18am

90% SUBMITTAL
NOT FOR CONSTRUCTION

0 1" 2" 4"
SCALE: 3" = 1'-0"

MASSACHUSETTS BAY TRANSPORTATION AUTHORITY
FITCHBURG COMMUTER RAIL LINE IMPROVEMENT PROJECT
CONTRACT NO. G67PS01

SOUTH ACTON STATION
DETAILS
WALL SYSTEMS

ISSUE	DATE	DESCRIPTION	BY	CHKD.	APP.

HNTB 300 APOLLO DRIVE CHELMSFORD, MA 01824 (978) 905-4000

Lozano, Baskin, and Associates, Inc.
Architecture • Urban Design • City Planning
205 Mt. Auburn St. Watertown, MA 02472

MASSACHUSETTS BAY TRANSPORTATION AUTHORITY
APPROVED BY:
PROJECT MANAGER Date
PROJECT MANAGER Date

HORIZ: N/A	DES. BY	DR. BY	CHK. BY	PLAN NO.	ISSUE
VERT: N/A	MB	DW	MB		
DATE: 09/08/11	DW			SHEET A-5.3	

FLEXIBLE STEP FLASHING NOTE:
WRAP FLASHING AROUND 2X2 HSS POST, 10X10 HSS COLUMNS, 4X10 HSS BEAMS AND PROFILE OF METAL CLADDING TO PROVIDE WATER TIGHT SEAL BETWEEN WALL SYSTEM COMPONENTS AND METAL FLASHING.

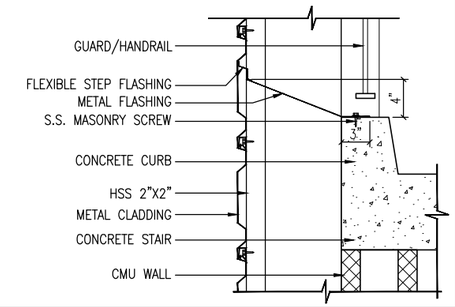

4 DETAIL: FLASHING AT STAIR LANDING
1 1/2" = 1'-0"

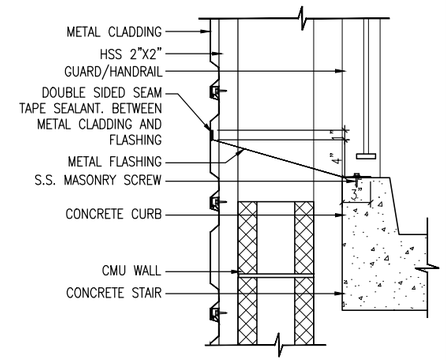

1 DETAIL: FLASHING AT STAIR LANDING
1 1/2" = 1'-0"

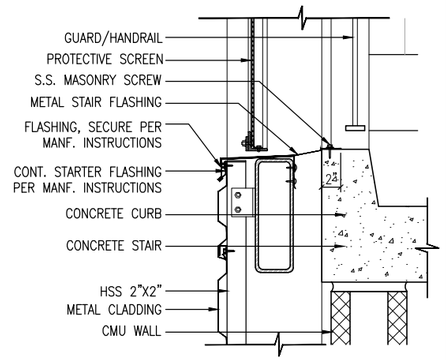

2 DETAIL: FLASHING AT STAIR LANDING
1 1/2" = 1'-0"

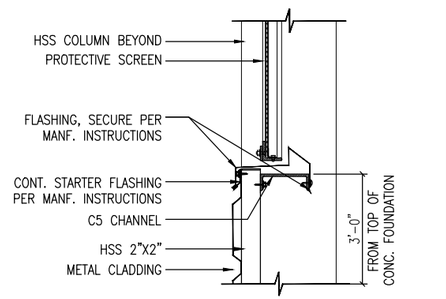

3 DETAIL: FLASHING AT SCREEN BASE
1 1/2" = 1'-0"

0 4" 8" 1'-4"
SCALE: 1 1/2" = 1'-0"

90% SUBMITTAL
NOT FOR CONSTRUCTION

ISSUE	DATE	DESCRIPTION	BY	CHKD.	APP.

MASSACHUSETTS BAY TRANSPORTATION AUTHORITY

FITCHBURG COMMUTER RAIL LINE
IMPROVEMENT PROJECT
CONTRACT NO. G67PS01

SOUTH ACTON STATION
DETAILS

Lozano, Baskin, and Associates, Inc.
Architecture•Urban Design•City Planning
205 Mt. Auburn St. Watertown, MA 02472

HNTB
300 APOLLO DRIVE
CHELMSFORD, MA 01824
(978) 905-4000

PROJECT MANAGER Date

MASSACHUSETTS BAY TRANSPORTATION AUTHORITY
APPROVED BY:
PROJECT MANAGER Date

HORIZ: N/A	DES. BY	DR. BY	CHK. BY	PLAN NO.	ISSUE
VERT: N/A	MB DW	DW	MB		
DATE: 09/08/11				SHEET A-5.4	

FILE NAME: C:\Documents and Settings\Mackintosh LBA\local settings\temp\AcPublish_1604\ 04 A-DE0001.dwg
PLOT DATE: Sep 02, 2011 - 8:18am

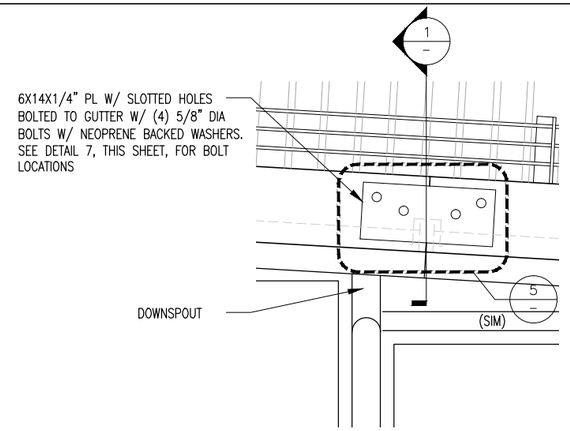

8 ELEVATION: RAMP GUTTER AT JOINT
1 1/2" = 1'-0"

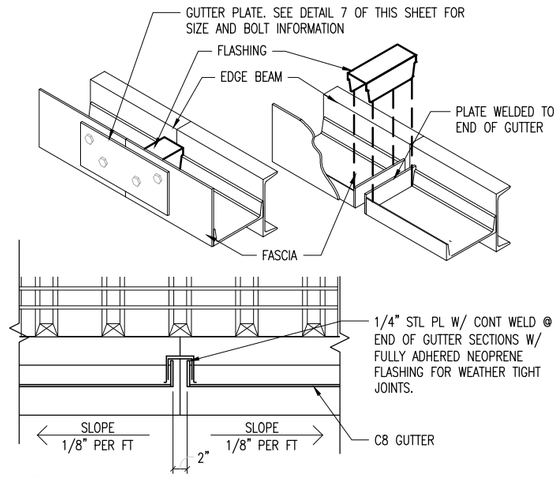

5 SECTION: CANOPY GUTTER AT HIGH POINT
3" = 1'-0"

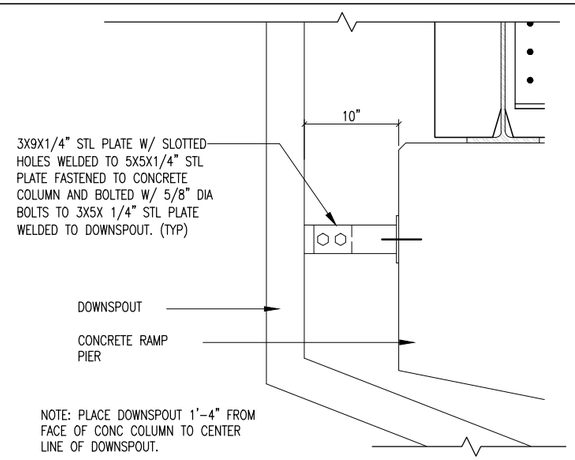

3 DETAIL: DOWNSPOUT AT CONCRETE PIER
1 1/2" = 1'-0"

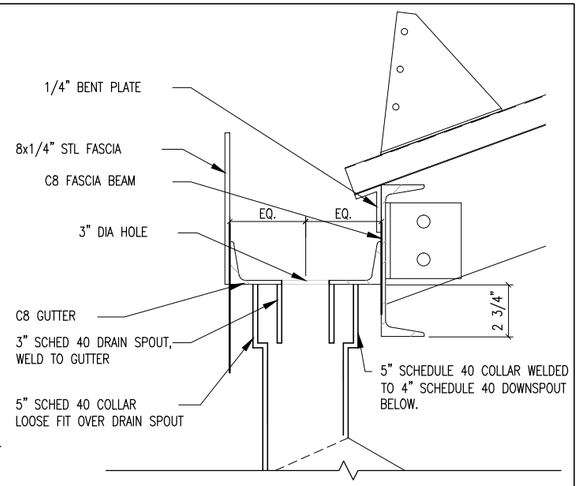

1 DETAIL: GUTTER/DOWNSPOUT
3" = 1'-0"

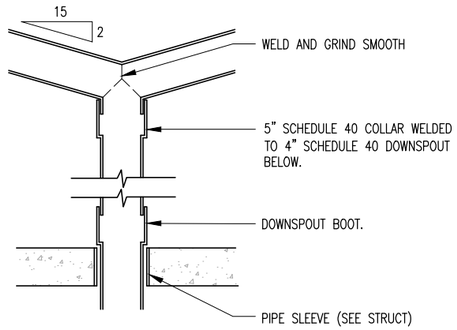

9 ELEVATION: DOWNSPOUT
1 1/2" = 1'-0"

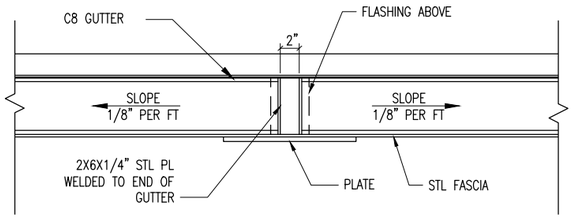

6 PLAN: CANOPY GUTTER AT HIGH POINT
NTS

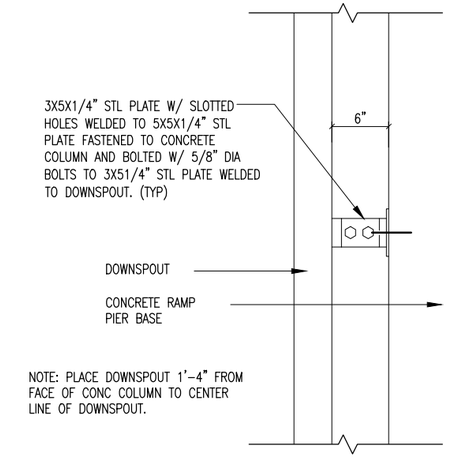

4 DETAIL: DOWNSPOUT AT CONCRETE PIER
1 1/2" = 1'-0"

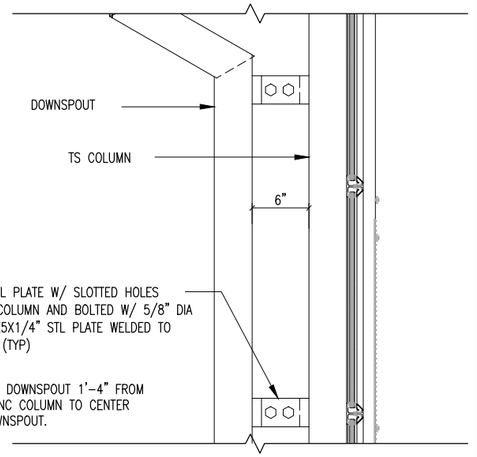

2 DETAIL: DOWNSPOUT AT HSS COLUMN
1 1/2"" = 1'-0"

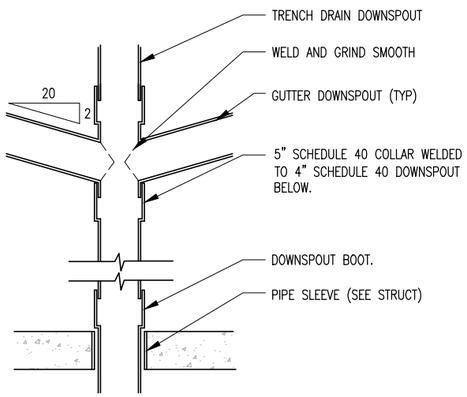

10 ELEVATION: DOWNSPOUT
1 1/2" = 1'-0"

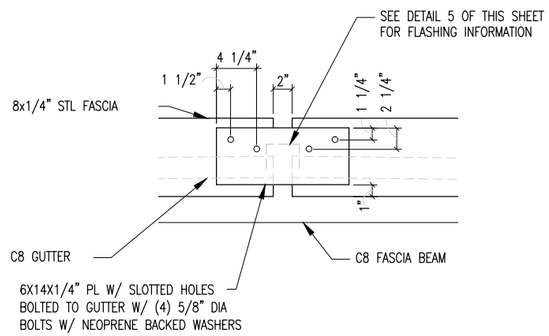

7 ELEVATION: CANOPY GUTTER AT HIGH POINT
1 1/2" = 1'-0"

0 2" 4" 8"
SCALE: 1 1/2" = 1'-0"

0 1" 2" 4"
SCALE: 3" = 1'-0"

90% SUBMITTAL
NOT FOR CONSTRUCTION

FILE NAME: C:\Documents and Settings\Mackintosh LBA\local settings\temp\AcPublish_1604\ 04 A-DE0001.dwg
PLOT DATE: Sep 02, 2011 - 8:18am

MASSACHUSETTS BAY TRANSPORTATION AUTHORITY
FITCHBURG COMMUTER RAIL LINE IMPROVEMENT PROJECT
CONTRACT NO. G67PS01

SOUTH ACTON STATION
DETAILS
DOWNSPOUTS AND GUTTERS

ISSUE	DATE	DESCRIPTION	BY	CHKD.	APP.

PROJECT MANAGER Date

HNTB 300 APOLLO DRIVE CHELMSFORD, MA 01824 (978) 905-4000

MASSACHUSETTS BAY TRANSPORTATION AUTHORITY
APPROVED BY:
PROJECT MANAGER Date

Lozano, Baskin, and Associates, Inc.
Architecture•Urban Design•City Planning
205 Mt. Auburn St. Watertown, MA 02472

HORIZ: N/A	DES. BY	DR. BY	CHK. BY	PLAN NO.	ISSUE
VERT: N/A	MB DW	DW	MB		
DATE: 09/08/11				SHEET A-5.5	

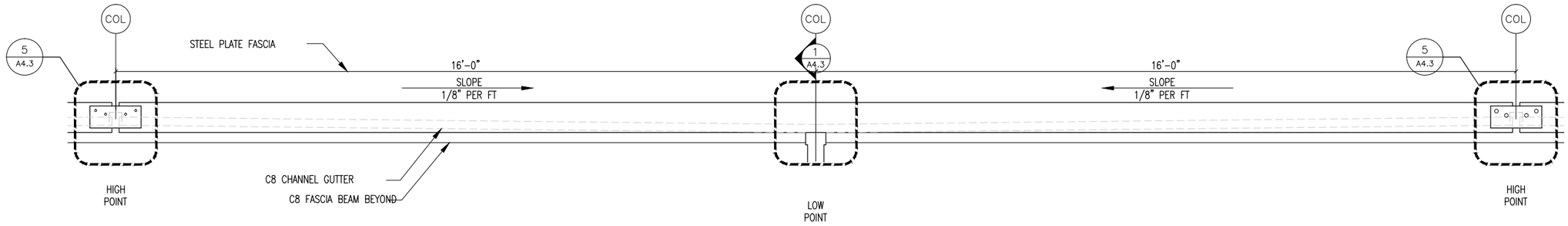

1 DETAIL: TYPICAL CANOPY GUTTER MODULE
3/4" = 1'-0"

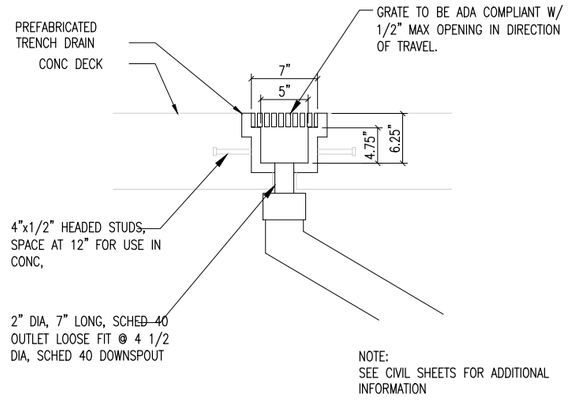

NOTE:
SEE CIVIL SHEETS FOR ADDITIONAL INFORMATION

6 TRENCH DRAIN
1 1/2" = 1'-0"

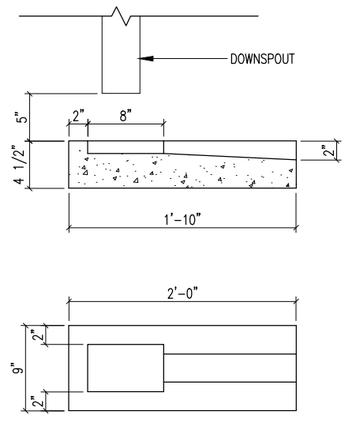

4 DETAIL: SPLASH BLOCK
1 1/2" = 1'-0"

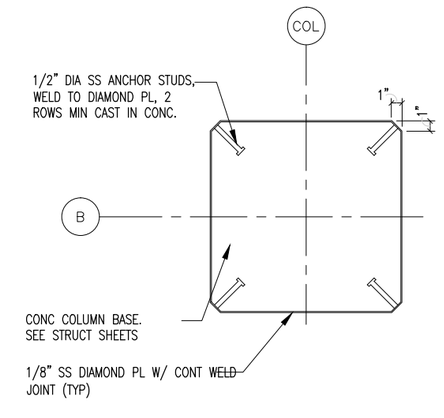

3 DETAIL: COLUMN BASE
1 1/2" = 1'-0"

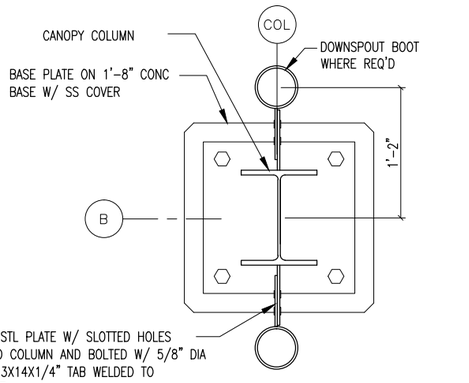

2 DETAIL: DOWNSPOUT CONNECTION AT CANOPY
1 1/2" = 1'-0"

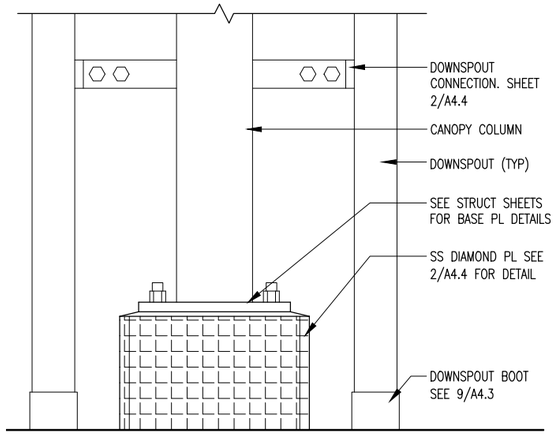

5 DETAIL: COLUMN/DOWNSPOUTS AT CANOPY
1 1/2" = 1'-0"

0 4" 8" 1'-4"
SCALE: 3/4" = 1'-0"

0 2" 4" 8"
SCALE: 1 1/2" = 1'-0"

90% SUBMITTAL
NOT FOR CONSTRUCTION

FILE NAME: C:\Documents and Settings\Mackintosh LBA\local settings\temp\AcPublish_1604\ 04 A-DE0001.dwg
PLOT DATE: Sep 02, 2011 - 8:18am

ISSUE	DATE	DESCRIPTION	BY	CHKD.	APP.

MASSACHUSETTS BAY TRANSPORTATION AUTHORITY

FITCHBURG COMMUTER RAIL LINE
IMPROVEMENT PROJECT
CONTRACT NO. G67PS01

SOUTH ACTON STATION
DETAILS
MISCELLANEOUS

HNTB
300 APOLLO DRIVE
CHELMSFORD, MA 01824
(978) 905-4000

Lozano, Baskin, and Associates, Inc.
Architecture•Urban Design•City Planning
205 Mt. Auburn St. Watertown, MA 02472

MASSACHUSETTS BAY TRANSPORTATION AUTHORITY
APPROVED BY:

PROJECT MANAGER Date
PROJECT MANAGER Date

HORIZ: N/A	DES. BY	DR. BY	CHK. BY	PLAN NO.	ISSUE
VERT: N/A	MB DW	DW	MB		
DATE: 09/08/11				SHEET A-5.6	

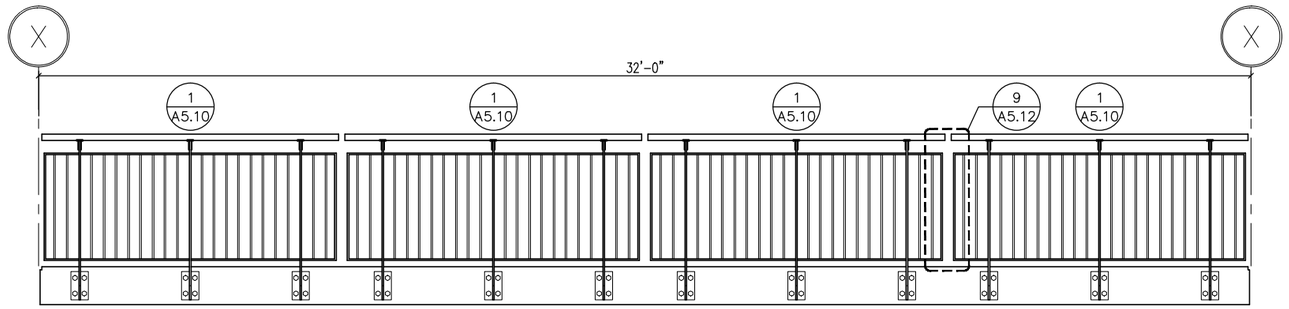

4 TYPICAL GUARD FENCE COMPONANT
1/2" = 1'-0"

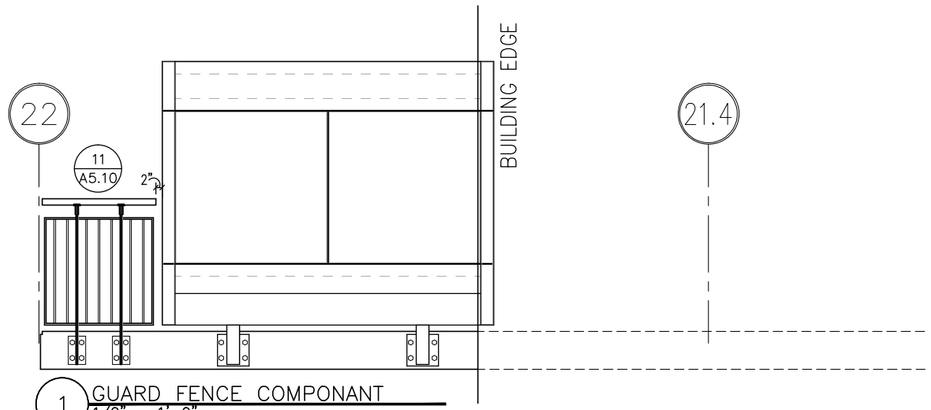

1 GUARD FENCE COMPONANT
1/2" = 1'-0"

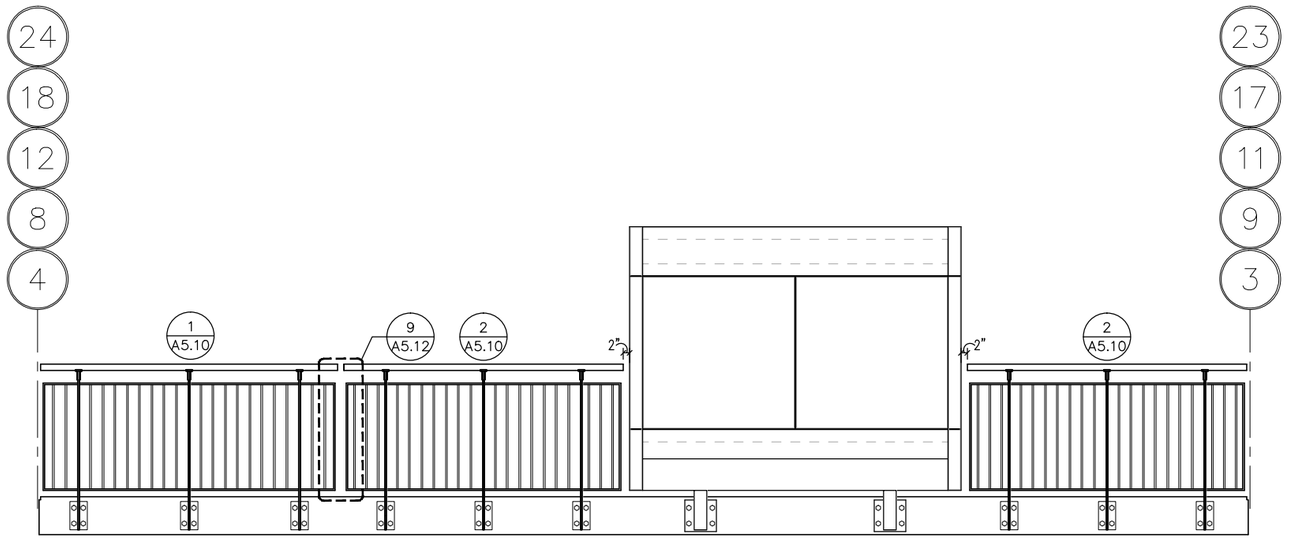

5 GUARD FENCE COMPONANT
1/2" = 1'-0"

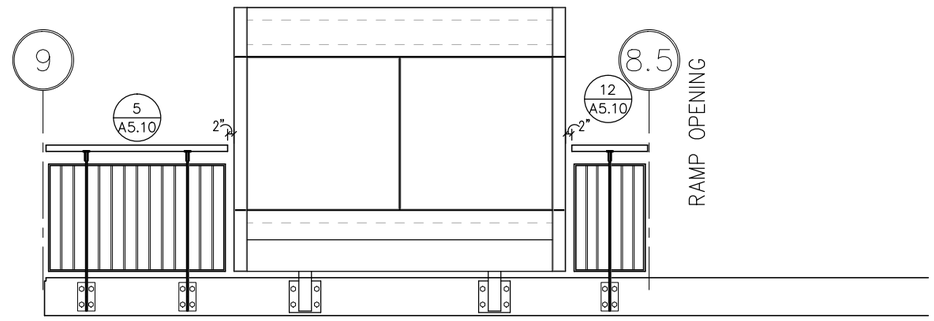

2 GUARD FENCE COMPONANT
1/2" = 1'-0"

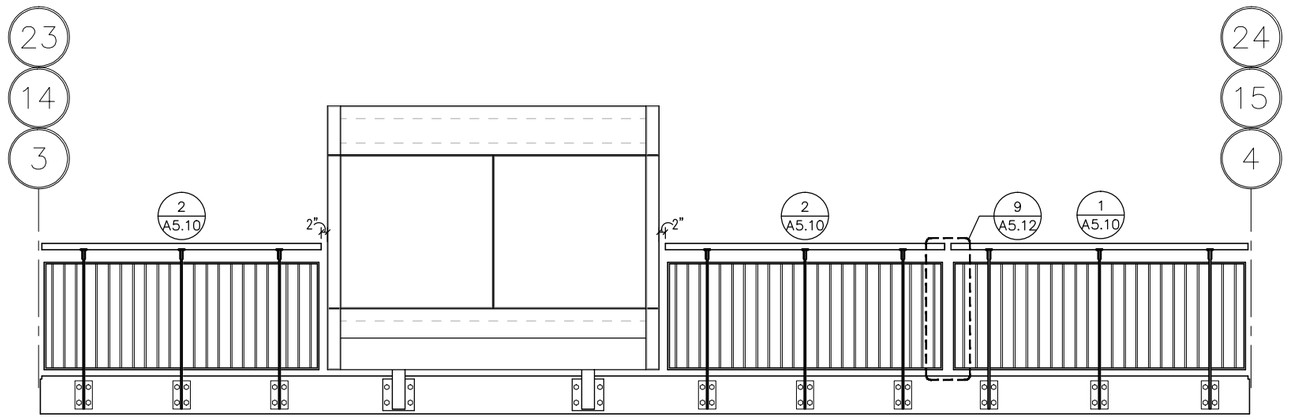

6 GUARD FENCE COMPONANT
1/2" = 1'-0"

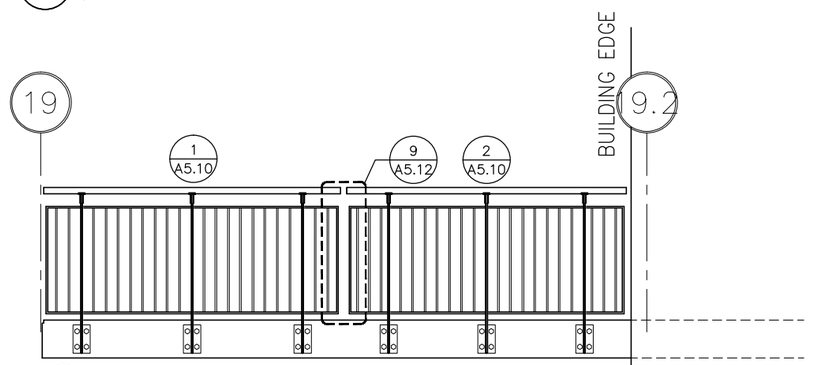

3 GUARD FENCE COMPONANT
1/2" = 1'-0"

90% SUBMITTAL
NOT FOR CONSTRUCTION

0 1' 2' 4'
SCALE: 1/2" = 1'-0"

MASSACHUSETTS BAY TRANSPORTATION AUTHORITY

FITCHBURG COMMUTER RAIL LINE
IMPROVEMENT PROJECT
CONTRACT NO. G67PS01

SOUTH ACTON STATION
GUARD FENCE
SCHEDULE

ISSUE	DATE	DESCRIPTION	BY	CHKD.	APP.

HNTB
300 APOLLO DRIVE
CHELMSFORD, MA 01824
(978) 905-4000

PROJECT MANAGER Date

MASSACHUSETTS BAY TRANSPORTATION AUTHORITY
APPROVED BY:
PROJECT MANAGER Date

Lozano, Baskin, and Associates, Inc.
Architecture • Urban Design • City Planning
205 Mt. Auburn St. Watertown, MA 02472

HORIZ: N/A	DES. BY	DR. BY	CHK. BY	PLAN NO.	ISSUE
VERT: N/A	MB DW	DW	MB		
DATE: 09/08/11				SHEET A-5.7	

FILE NAME: C:\Documents and Settings\Mackintosh LBA\local settings\temp\AcPublish_1604\ 04 A-DE0002.dwg
PLOT DATE: Sep 02, 2011 - 8:18am

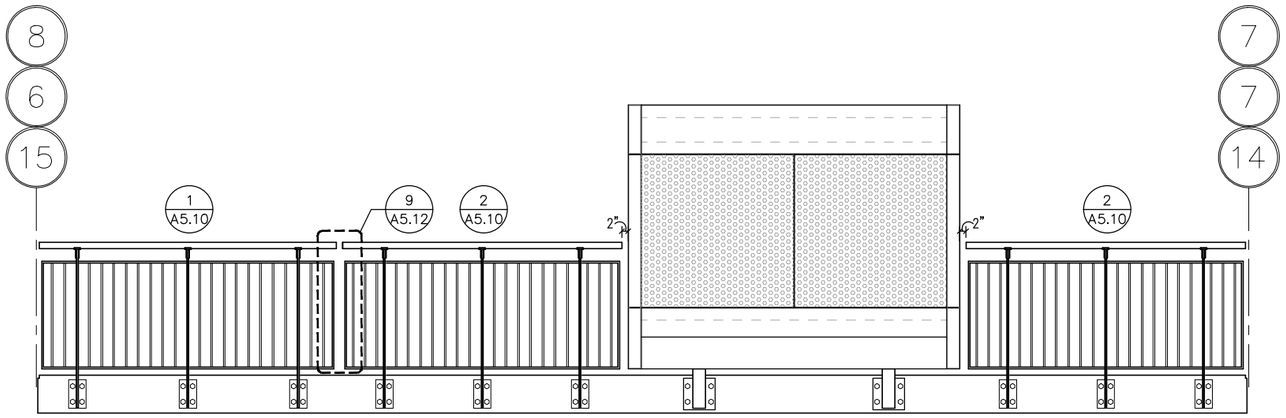

4 GUARD FENCE COMPONANT
1/2" = 1'-0"

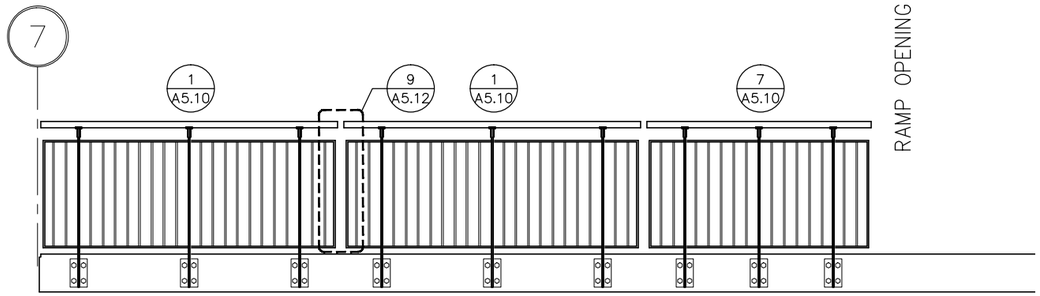

1 GUARD FENCE COMPONANT
1/2" = 1'-0"

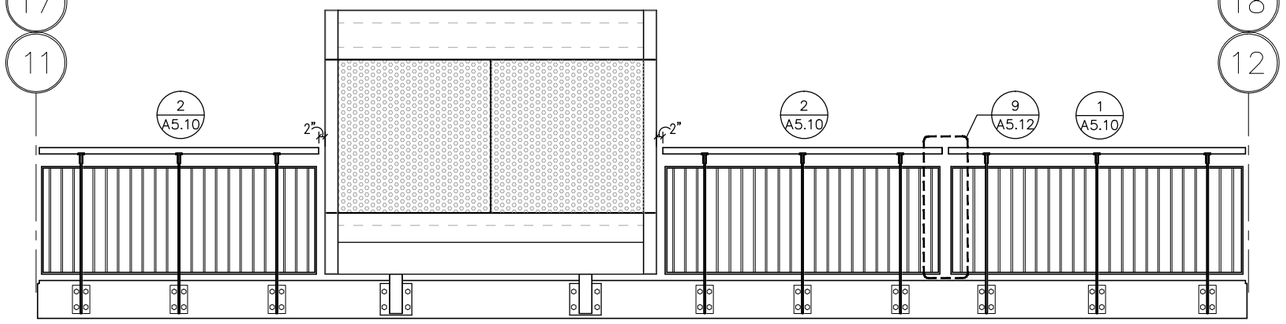

5 GUARD FENCE COMPONANT
1/2" = 1'-0"

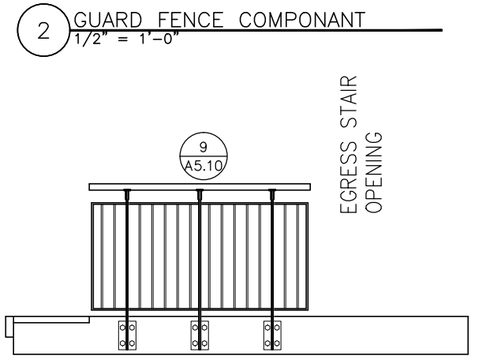

2 GUARD FENCE COMPONANT
1/2" = 1'-0"

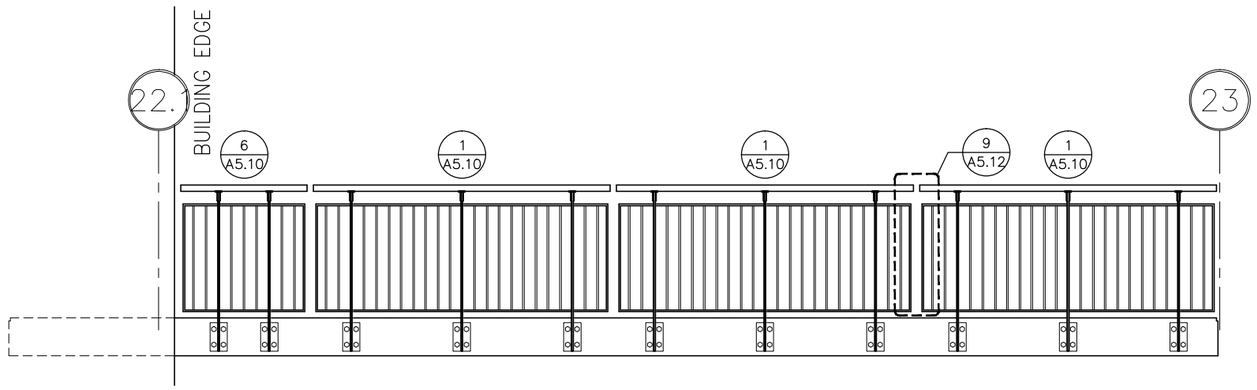

6 GUARD FENCE COMPONANT
1/2" = 1'-0"

3 GUARD FENCE COMPONANT
1/2" = 1'-0"

90% SUBMITTAL
NOT FOR CONSTRUCTION

SCALE: 1/2" = 1'-0"

MASSACHUSETTS BAY TRANSPORTATION AUTHORITY

FITCHBURG COMMUTER RAIL LINE
IMPROVEMENT PROJECT
CONTRACT NO. G67PS01

SOUTH ACTON STATION
GUARD FENCE
SCHEDULE

ISSUE	DATE	DESCRIPTION	BY	CHKD.	APP.

HNTB
300 APOLLO DRIVE
CHELMSFORD, MA 01824
(978) 905-4000

PROJECT MANAGER Date

MASSACHUSETTS BAY TRANSPORTATION AUTHORITY
APPROVED BY:
PROJECT MANAGER Date

Lozano, Baskin, and Associates, Inc.
Architecture•Urban Design•City Planning
205 Mt. Auburn St. Watertown, MA 02472

HORIZ: N/A	DES. BY	DR. BY	CHK. BY	PLAN NO.	ISSUE
VERT: N/A	MB	DW	MB		
DATE: 09/08/11	DW			SHEET A-5.8	

FILE NAME: C:\Documents and Settings\Mackintosh LBA\local settings\temp\AcPublish_1604\ 04 A-DE0002.dwg
PLOT DATE: Sep 02, 2011 - 8:18am

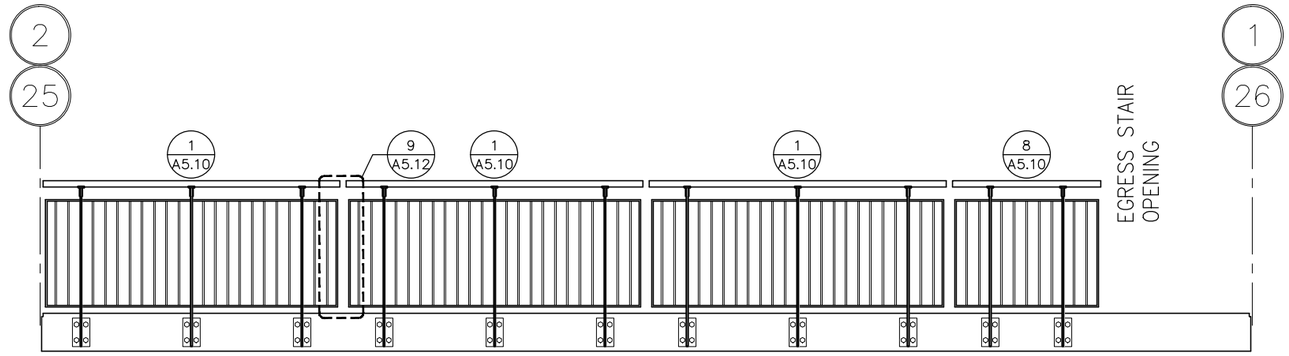

1 GUARD FENCE COMPONANT
1/2" = 1'-0"

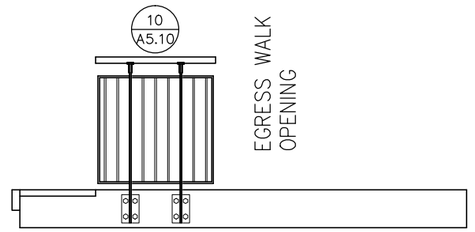

2 GUARD FENCE COMPONANT
1/2" = 1'-0"

3 GUARD FENCE COMPONANT
1/2" = 1'-0"

0 1' 2' 4'
SCALE: 1/2" = 1'-0"

90% SUBMITTAL
NOT FOR CONSTRUCTION

FILE NAME: C:\Documents and Settings\Mackintosh LBA\local settings\temp\AcPublish_1604\ 04 A-DE0002.dwg
PLOT DATE: Sep 02, 2011 - 8:19am

ISSUE	DATE	DESCRIPTION	BY	CHKD.	APP.

MASSACHUSETTS BAY TRANSPORTATION AUTHORITY

FITCHBURG COMMUTER RAIL LINE
IMPROVEMENT PROJECT
CONTRACT NO. G67PS01

SOUTH ACTON STATION
GUARD FENCE
SCHEDULE

HNTB
300 APOLLO DRIVE
CHELMSFORD, MA 01824
(978) 905-4000

Lozano, Baskin, and Associates, Inc.
Architecture•Urban Design•City Planning
205 Mt. Auburn St. Watertown, MA 02472

MASSACHUSETTS BAY TRANSPORTATION AUTHORITY
APPROVED BY:

PROJECT MANAGER Date
PROJECT MANAGER Date

HORIZ: N/A	DES. BY	DR. BY	CHK. BY	PLAN NO.	ISSUE
VERT: N/A	MB	DW	MB		
DATE: 09/08/11	DW			SHEET A-5.9	

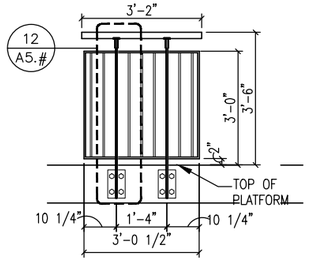

10 GUARD FENCE SEGMENT
1/2" = 1'-0"

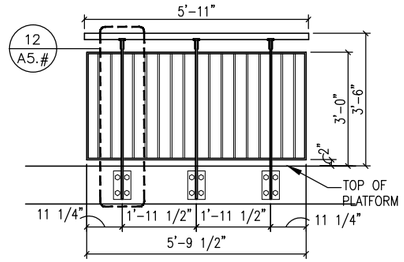

7 GUARD FENCE SEGMENT
1/2" = 1'-0"

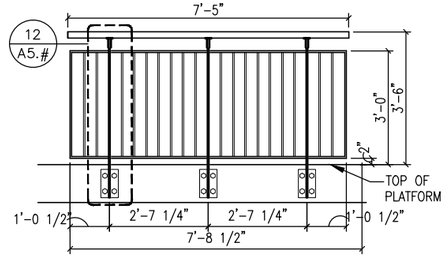

4 GUARD FENCE SEGMENT
1/2" = 1'-0"

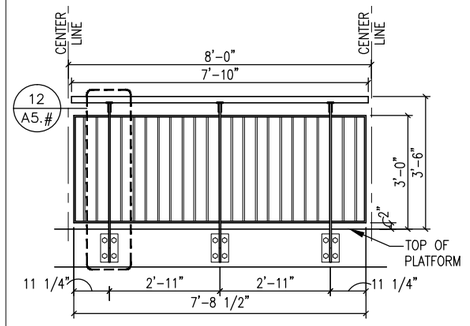

1 TYPICAL GUARD FENCE SEGMENT
1/2" = 1'-0"

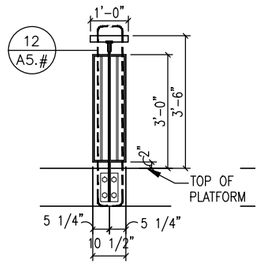

11 GUARD FENCE SEGMENT
1/2" = 1'-0"

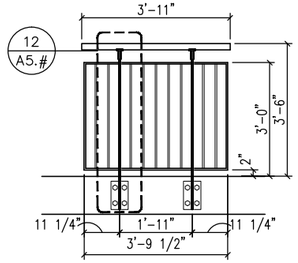

8 GUARD FENCE SEGMENT
1/2" = 1'-0"

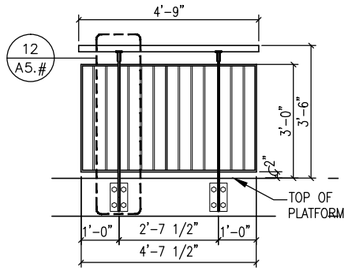

5 GUARD FENCE SEGMENT
1/2" = 1'-0"

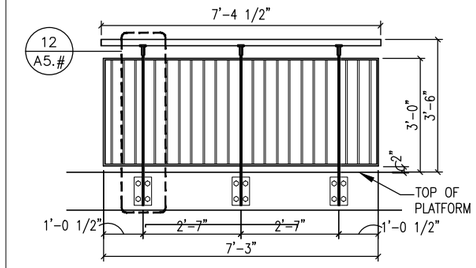

2 GUARD FENCE SEGMENT
1/2" = 1'-0"

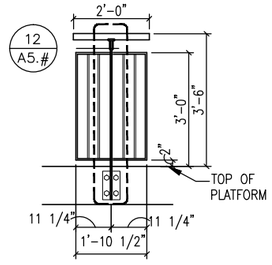

12 GUARD FENCE SEGMENT
1/2" = 1'-0"

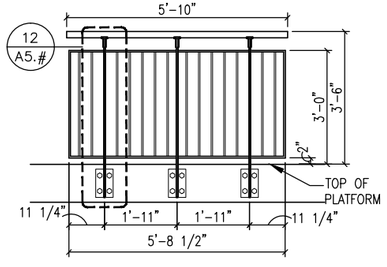

9 GUARD FENCE SEGMENT
1/2" = 1'-0"

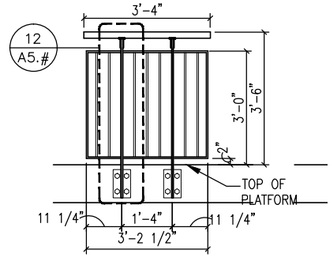

6 GUARD FENCE SEGMENT
1/2" = 1'-0"

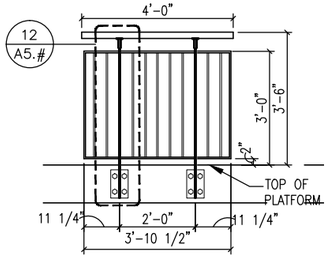

3 GUARD FENCE SEGMENT
1/2" = 1'-0"

90% SUBMITTAL
NOT FOR CONSTRUCTION

SCALE: 1/2" = 1'-0"

MASSACHUSETTS BAY TRANSPORTATION AUTHORITY

FITCHBURG COMMUTER RAIL LINE
IMPROVEMENT PROJECT
CONTRACT NO. G67PS01

SOUTH ACTON STATION
GUARD FENCE
SCHEDULE

ISSUE	DATE	DESCRIPTION	BY	CHKD.	APP.

HNTB
300 APOLLO DRIVE
CHELMSFORD, MA 01824
(978) 905-4000

Lozano, Baskin, and Associates, Inc.
Architecture•Urban Design•City Planning
205 Mt. Auburn St. Watertown, MA 02472

MASSACHUSETTS BAY TRANSPORTATION AUTHORITY
APPROVED BY:
PROJECT MANAGER Date
PROJECT MANAGER Date

HORIZ: N/A	DES. BY	DR. BY	CHK. BY	PLAN NO.	ISSUE
VERT: N/A	MB	DW	MB		
DATE: 09/08/11	DW			SHEET A-5.10	

FILE NAME: C:\Documents and Settings\Mackintosh LBA\local settings\temp\AcPublish_1604\ 04 A-DE0002.dwg
PLOT DATE: Sep 02, 2011 - 8:19am

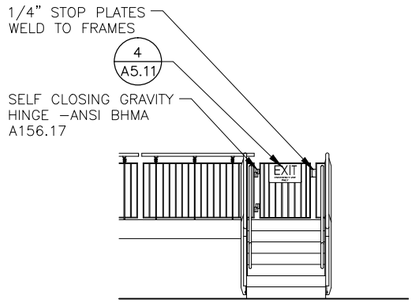

11 ELEVATION: PLATFORM EGRESS STAIR
1/4" = 1'-0"

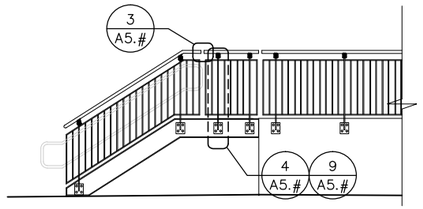

8 ELEVATION: PLATFORM EGRESS STAIR
1/4" = 1'-0"

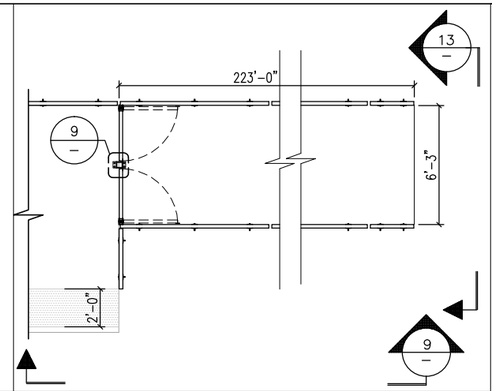

5 PLAN: PLATFORM EGRESS WALK
1/4" = 1'-0"

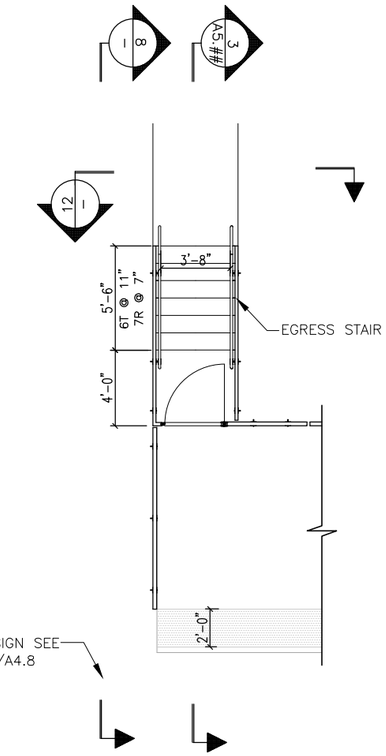

3 PLAN: PLATFORM EGRESS STAIR
1/4" = 1'-0"

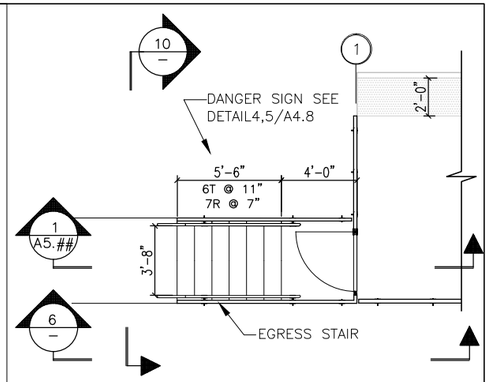

1 PLAN: PLATFORM EGRESS STAIR
1/4" = 1'-0"

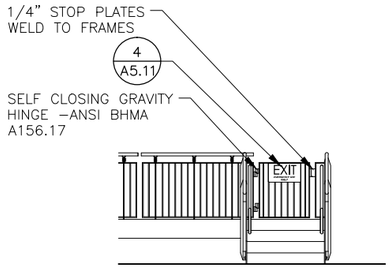

12 ELEVATION: PLATFORM EGRESS STAIR
1/4" = 1'-0"

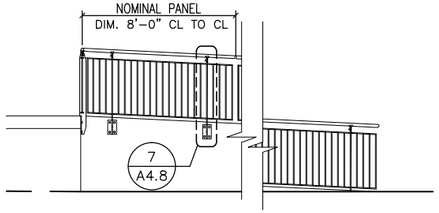

9 ELEVATION: PLATFORM EGRESS WALK
1/4" = 1'-0"

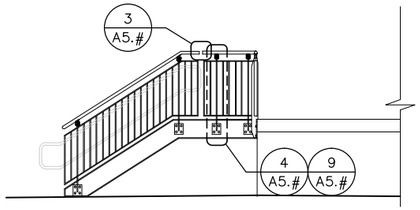

6 ELEVATION: PLATFORM EGRESS STAIR
1/4" = 1'-0"

3 PLAN: PLATFORM EGRESS STAIR
1/4" = 1'-0"

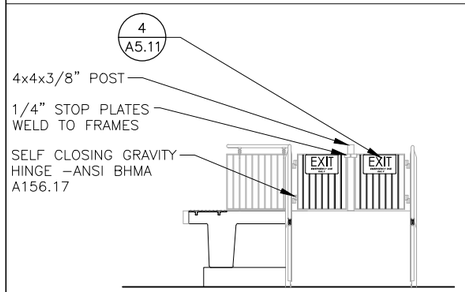

13 ELEVATION: PLATFORM EGRESS WALK
1/4" = 1'-0"

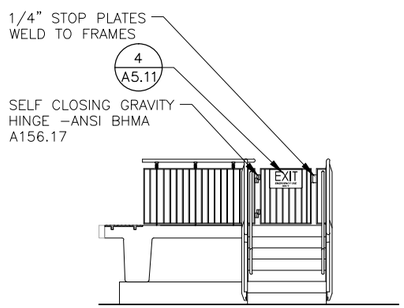

10 ELEVATION: PLATFORM EGRESS STAIR
1/4" = 1'-0"

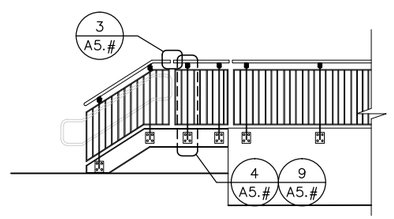

7 ELEVATION: PLATFORM EGRESS STAIR
1/4" = 1'-0"

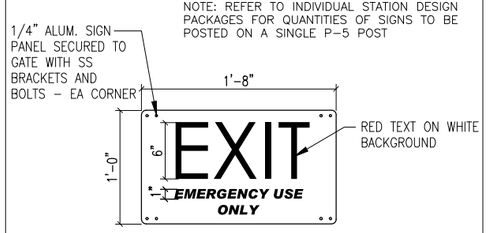

4 DETAIL: GATE EXIT SIGN
3" = 1'-0"

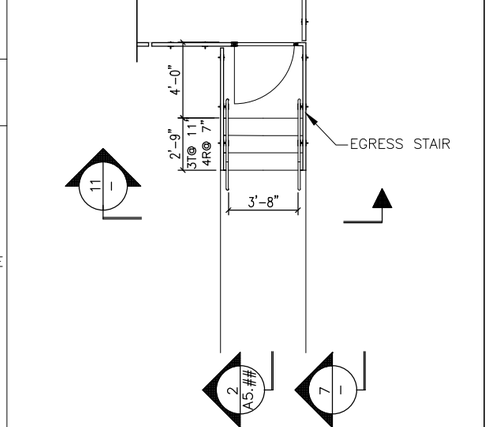

2 PLAN: PLATFORM EGRESS STAIR
1/4" = 1'-0"

0 2" 4" 8"
SCALE: 1 1/2" = 1'-0"

0 1" 2" 4"
SCALE: 3" = 1'-0"

90% SUBMITTAL
NOT FOR CONSTRUCTION

ISSUE	DATE	DESCRIPTION	BY	CHKD.	APP.

Lozano, Baskin, and Associates, Inc.
Architecture • Urban Design • City Planning
205 Mt. Auburn St. Watertown, MA 02472

HNTB
300 APOLLO DRIVE
CHELMSFORD, MA 01824
(978) 905–4000

MASSACHUSETTS BAY TRANSPORTATION AUTHORITY

FITCHBURG COMMUTER RAIL LINE
IMPROVEMENT PROJECT
CONTRACT NO. G67PS01

SOUTH ACTON STATION
PLANS, ELEVATIONS
EGRESS STAIR AND WALK

MASSACHUSETTS BAY TRANSPORTATION AUTHORITY
APPROVED BY:

PROJECT MANAGER Date | PROJECT MANAGER Date

HORIZ: N/A	DES. BY	DR. BY	CHK. BY	PLAN NO.	ISSUE
VERT: N/A	MB DW	DW	MB		
DATE: 09/08/11				SHEET A–5.11	

FILE NAME: C:\Documents and Settings\Mackintosh LBA\local settings\temp\AcPublish_1604\ 04 A–DE0002.dwg
PLOT DATE: Sep 02, 2011 – 8:19am

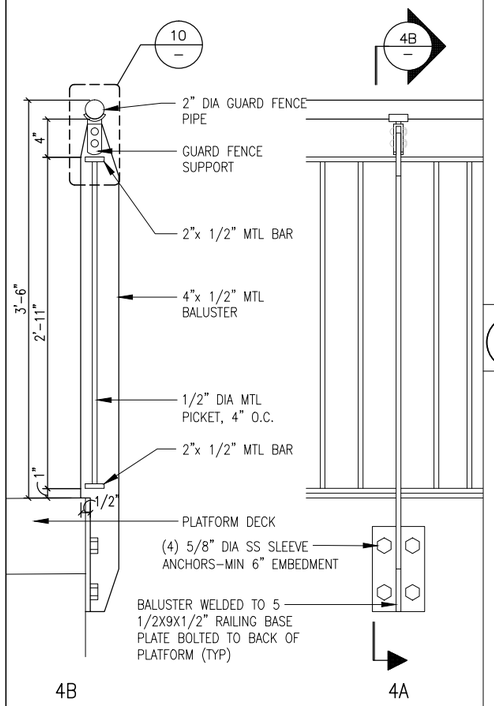

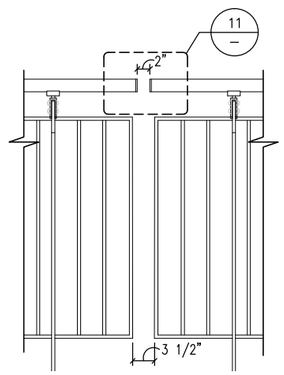

9 PIPE RAIL JOINT AT GUARD FENCE
1" = 1'–0"

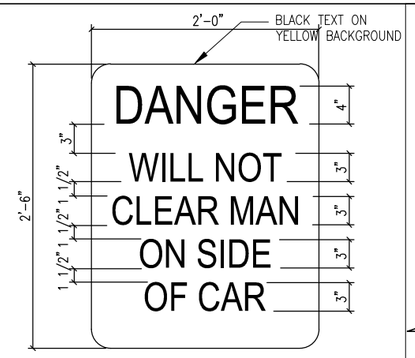

7 DETAIL: GATE EXIT SIGN
3" = 1'–0"

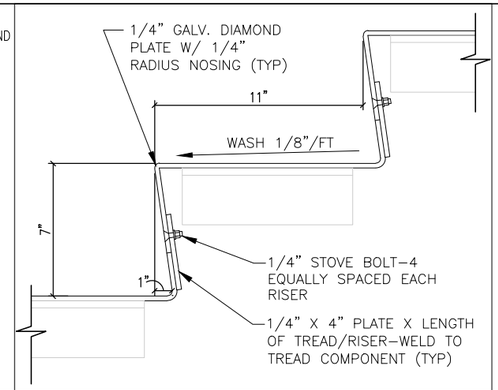

4 DETAIL: STAIR TREAD/RISER
3" = 1'–0"

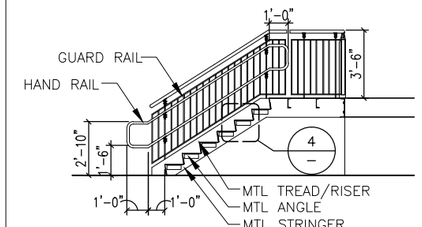

1 SECTION: PLATFORM EGRESS STAIR
1/4" = 1'–0"

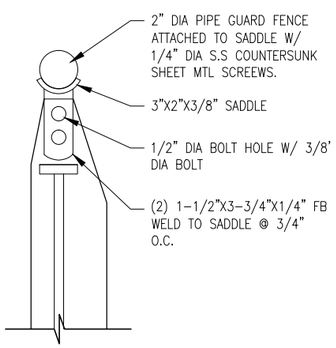

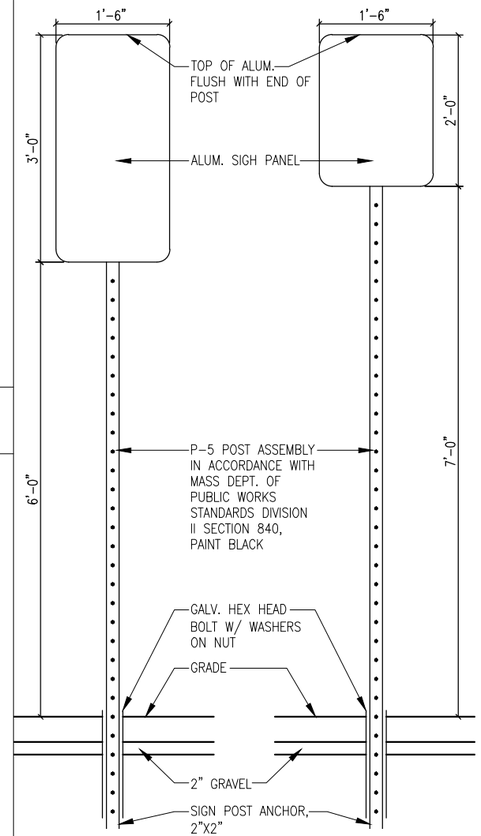

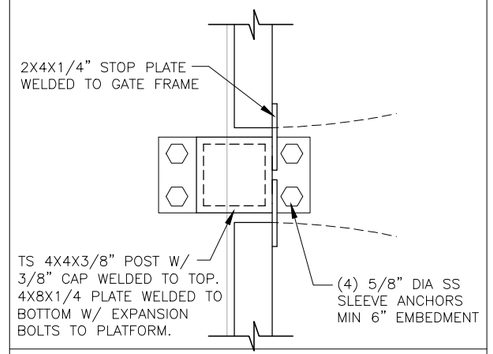

5 DETAIL: GATE STOP
3" = 1'–0"

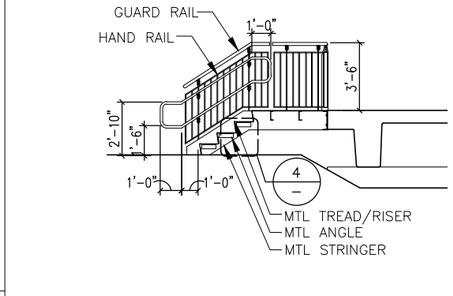

2 SECTION: PLATFORM EGRESS STAIR
1/4" = 1'–0"

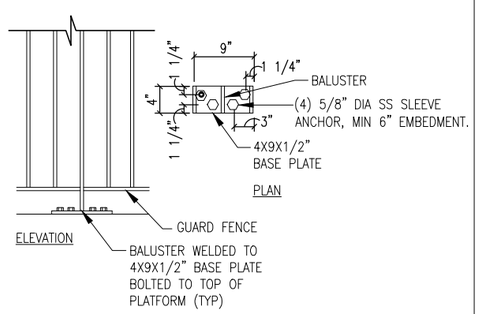

12 DETAIL: GUARD FENCE
1 1/2" = 1'–0"

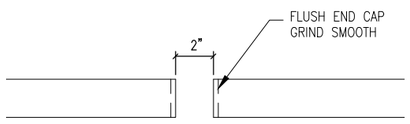

10 DETAIL: GUARD FENCE SUPPORT
3" = 1'–0"

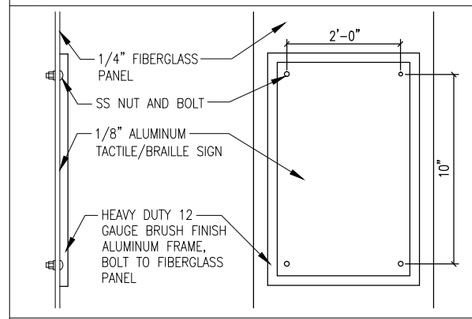

6 DETAIL: TACTILE/BRAILLE SIGN
1/4" = 1'–0"

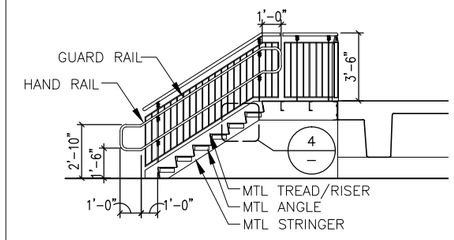

3 SECTION: PLATFORM EGRESS STAIR
1/4" = 1'–0"

13 DETAIL: GUARD FENCE BASE PLATE
3" = 1'–0"

11 DETAIL: PIPE GUARD FENCE JOINT
3" = 1'–0"

8 DETAIL: POST MOUNTED SIGNS
1" = 1'–0"

0 2" 4" 8"
SCALE: 1 1/2" = 1'-0"

0 1" 2" 4"
SCALE: 3" = 1'-0"

90% SUBMITTAL
NOT FOR CONSTRUCTION

MASSACHUSETTS BAY TRANSPORTATION AUTHORITY

FITCHBURG COMMUTER RAIL LINE
IMPROVEMENT PROJECT
CONTRACT NO. G67PS01

SOUTH ACTON STATION
SECTIONS, DETAILS
EGRESS STAIRS AND WALK

ISSUE	DATE	DESCRIPTION	BY	CHKD.	APP.

HNTB
300 APOLLO DRIVE
CHELMSFORD, MA 01824
(978) 905–4000

Lozano, Baskin, and Associates, Inc.
Architecture•Urban Design•City Planning
205 Mt. Auburn St. Watertown, MA 02472

MASSACHUSETTS BAY TRANSPORTATION AUTHORITY
APPROVED BY:
PROJECT MANAGER Date

PROJECT MANAGER Date

HORIZ: N/A	DES. BY	DR. BY	CHK. BY
VERT: N/A	MB DW	DW	MB
DATE: 09/08/11			

PLAN NO. SHEET A–5.12
ISSUE

FILE NAME: C:\Documents and Settings\Mackintosh LBA\local settings\temp\AcPublish_1604\ 04 A–DE0002.dwg
PLOT DATE: Sep 02, 2011 – 8:19am

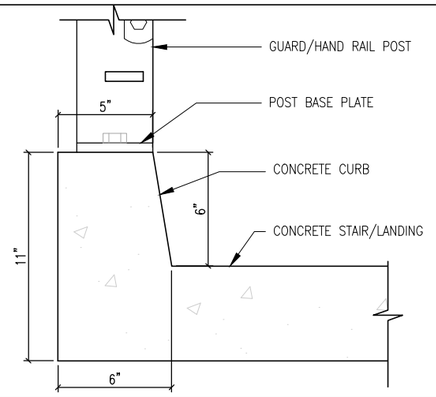

8 DETAIL: HANDRAIL AT STAIR
3" = 1'-0"

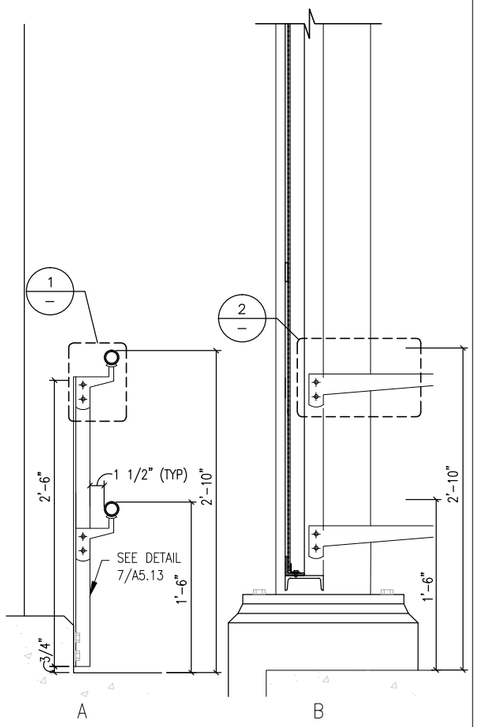

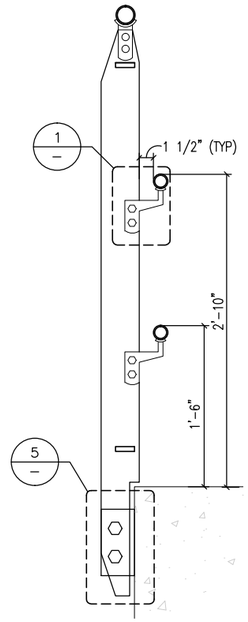

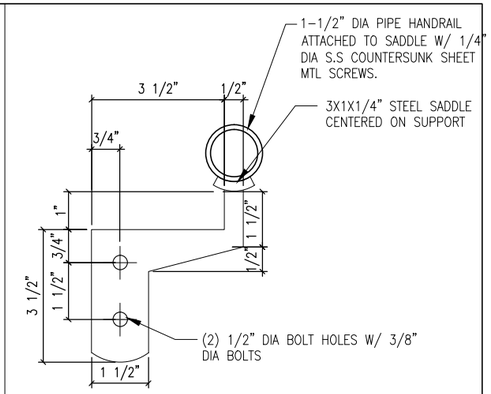

1 DETAIL: HANDRAIL
3" = 1'-0"

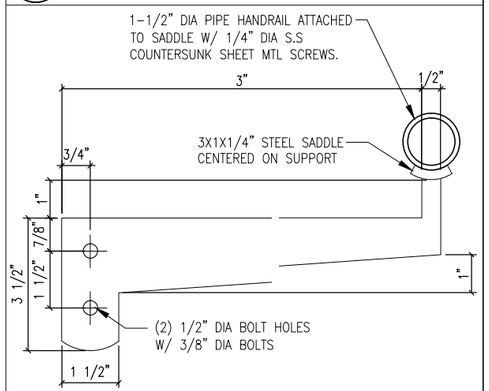

2 DETAIL: HANDRAIL
1 1/2" = 1'-0"

6 DETAIL: HANDRAIL HEIGHTS
3" = 1'-0"

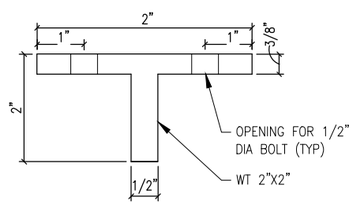

4 DETAIL: HANDRAIL HEIGHTS
1-1/2" = 1'-0"

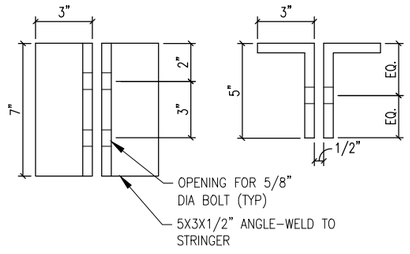

5 DETAIL: GUARD FENCE BASE PLATE
3" = 1'-0"

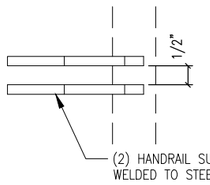

3 DETAIL: HANDRAIL
1 1/2" = 1'-0"

7 DETAIL: HANDRAIL SUPPORT
3" = 1'-0"

0 2" 4" 8"
SCALE: 1 1/2" = 1'-0"

0 1" 2" 4"
SCALE: 3" = 1'-0"

90% SUBMITTAL
NOT FOR CONSTRUCTION

MASSACHUSETTS BAY TRANSPORTATION AUTHORITY

FITCHBURG COMMUTER RAIL LINE
IMPROVEMENT PROJECT
CONTRACT NO. G67PS01

SOUTH ACTON STATION
DETAILS-GUARD FENCE AND HANDRAILS

ISSUE	DATE	DESCRIPTION	BY	CHKD.	APP.

HNTB
300 APOLLO DRIVE
CHELMSFORD, MA 01824
(978) 905-4000

Lozano, Baskin, and Associates, Inc.
Architecture•Urban Design•City Planning
205 Mt. Auburn St. Watertown, MA 02472

MASSACHUSETTS BAY TRANSPORTATION AUTHORITY
APPROVED BY:

PROJECT MANAGER Date
PROJECT MANAGER Date

HORIZ: N/A	DES. BY	DR. BY	CHK. BY	PLAN NO.	ISSUE
VERT: N/A	MB DW	DW	MB		
DATE: 09/08/11				SHEET A-5.13	

FILE NAME: C:\Documents and Settings\Mackintosh LBA\Local settings\temp\AcPublish_1604\ 04 A-DE0002.dwg
PLOT DATE: Sep 02, 2011 - 8:19am

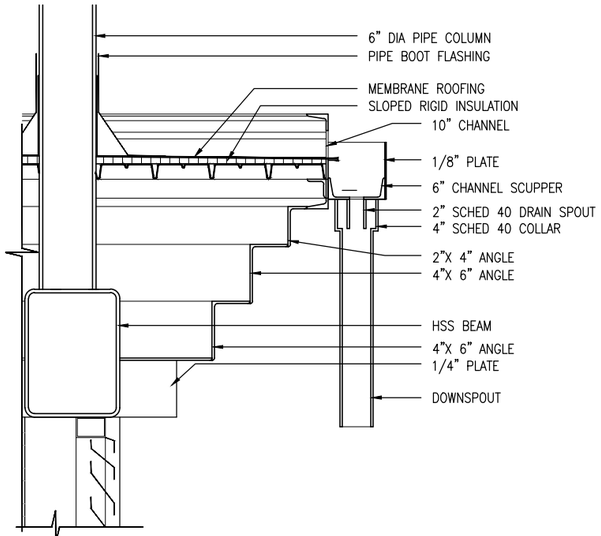

4 DETAIL: SCUPPER
1-1/2" = 1'-0"

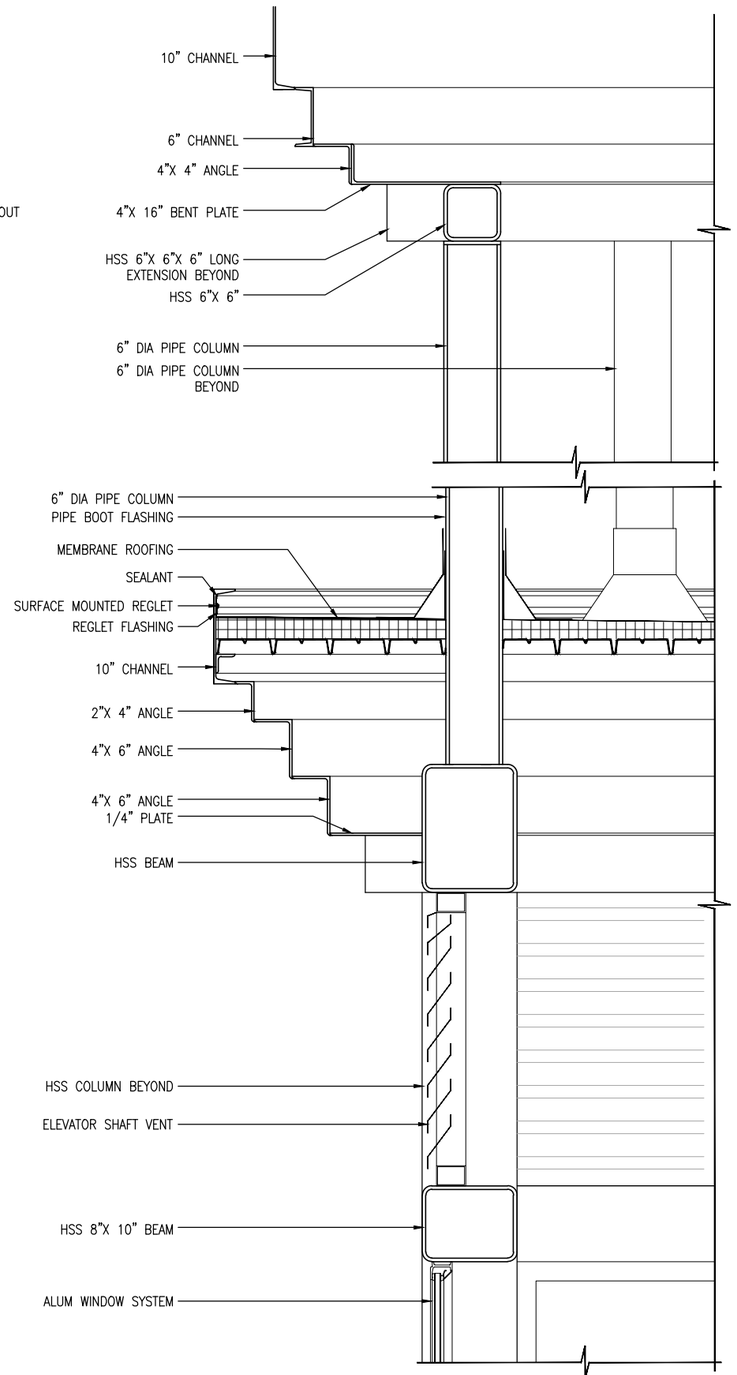

3 DETAIL: CAMPANILE
1-1/2" = 1'-0"

0 2" 4" 8"
SCALE: 1 1/2" = 1'-0"

0 1" 2" 4"
SCALE: 3" = 1'-0"

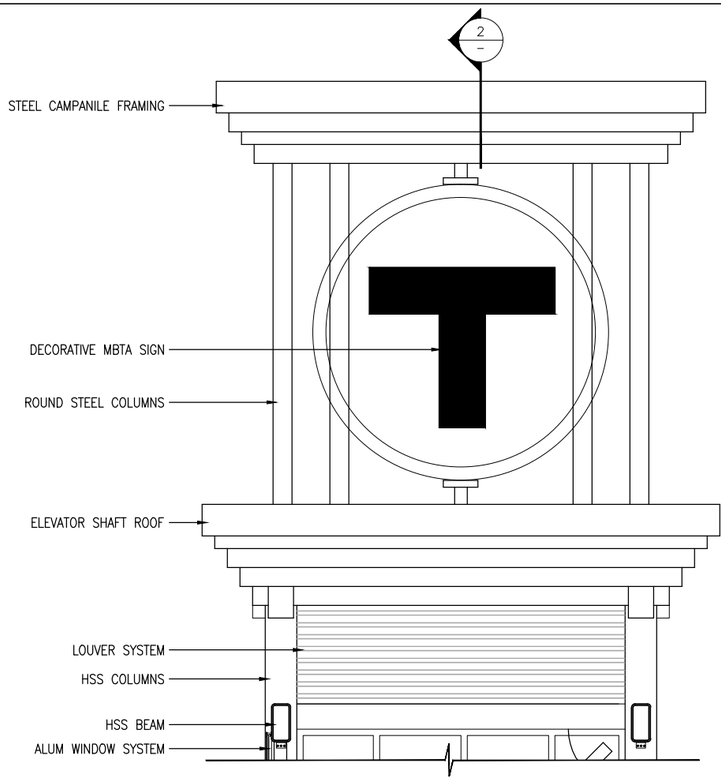

1 PARTIAL ELEVATION: CAMPANILE
1/2" = 1'-0"

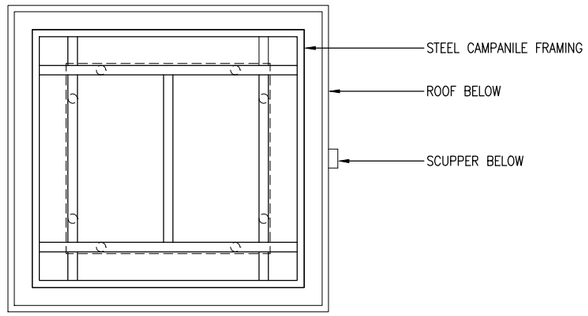

2 PARTIAL ROOF PLAN: CAMPANILE
1/4" = 1'-0"

90% SUBMITTAL
NOT FOR CONSTRUCTION

FILE NAME: C:\Documents and Settings\Mackintosh LBA\Local settings\Temp\AcPublish_1604\ 04 A-DE0002.dwg
PLOT DATE: Sep 02, 2011 - 8:19am

MASSACHUSETTS BAY TRANSPORTATION AUTHORITY
FITCHBURG COMMUTER RAIL LINE
IMPROVEMENT PROJECT
CONTRACT NO. G67PS01

SOUTH ACTON STATION
DETAILS
CAMPANILE

ISSUE	DATE	DESCRIPTION	BY	CHKD.	APP.

HNTB
300 APOLLO DRIVE
CHELMSFORD, MA 01824
(978) 905-4000

PROJECT MANAGER Date

MASSACHUSETTS BAY TRANSPORTATION AUTHORITY
APPROVED BY:
PROJECT MANAGER Date

Lozano, Baskin, and Associates, Inc.
Architecture•Urban Design•City Planning
205 Mt. Auburn St. Watertown, MA 02472

HORIZ: N/A	DES. BY	DR. BY	CHK. BY	PLAN NO.	ISSUE
VERT: N/A	MB DW	DW	MB		
DATE: 09/08/11				SHEET A-5.14	

SIGN/BENCH SCHEDULE

SIGN #	QTY.	GRAPHIC NORTH/ EAST	GRAPHIC SOUTH/ WEST	FRAME TYPE	MOUNTING DETAIL	BASE PLATE DETAIL	REMARKS
01	–	GRAPHIC 01	–	SUSPEND	–	X/AX.XX	ID BAND @ NORTH HEAD HOUSE ENTRY
02	–	GRAPHIC 02	02 O.H	SUSPEND	–	X/AX.XX	ID BAND @ ELEVATOR TO BRIDGE (BOTH SIDES)
03	–	GRAPHIC 03	–	SUSPEND	–	X/AX.XX	ID BAND @ RAMP LANDING
04	1	GRAPHIC 04	15A	TYPE ?	FOOTING	X/AX.XX	2 BAY SIGN W/BRAILLE SCHEDULE CASE/MAP
05	3	GRAPHIC 08	05	TYPE ?	BACK OF PLATFORM	X/AX.XX	2 BAY BENCH W/ WINDSCREEN – INBOUND
06	–	GRAPHIC 16	06	SUSPEND	–	X/AX.XX	EXTENDED ID BAND @ STAIR LANDING
07	–	GRAPHIC 07	17	TYPE ?	–	X/AX.XX	ID BAND @ INBOUND HH PLATFORM ENTRY
08	–	GRAPHIC 05	05	TYPE ?	FOOTING	X/AX.XX	2 BAY BENCH W/ WINDSCREEN
09	5	GRAPHIC 08	05	TYPE ?	BACK OF PLATFORM	X/AX.XX	2 BAY SIGN W/ WINDSCREEN INBOUND
10	–	GRAPHIC 10	17	TYPE ?	–	X/AX.XX	ID BAND @ HH OUTBOUND STAIR ENTRY
11	–	GRAPHIC 11	–	TYPE ?	–	X/AX.XX	ID BAND @ HH PLATFORM ENTRIES
12	–	GRAPHIC 12	–	TYPE ?	FOOTING	X/AX.XX	ID BAND @ HH INBOUND ELEVATOR LOBBY
13	4	GRAPHIC 05	13	TYPE ?	BACK OF PLATFORM	X/AX.XX	2 BAY SIGN W/ WINDSCREEN OUTBOUND
14	4	GRAPHIC 05	13	TYPE ?	FOOTING	X/AX.XX	2 BAY BENCH W/ WINDSCREEN – OUTBOUND
15	–	GRAPHIC 13	–	TYPE ?	FOOTING	X/AX.XX	2 BAY SIGN W/ OVERALL TRANSIT MAP INBOUND
16	–	GRAPHIC 14	–	TYPE ?	FOOTING	X/AX.XX	2 BAY SIGN W/ OVERALL TRANSIT MAP OUTBOUND
17	2	GRAPHIC 15	09	TYPE ?	FOOTING	X/AX.XX	2 BAY SIGN W/ BRAILLE SIGN & MAP–INBOUND
18	2	GRAPHIC 15	14	TYPE ?	FOOTING	X/AX.XX	2 BAY SIGN W/ BRAILLE SIGN & MAP–OUTBOUND
19	1	GRAPHIC 15	04A	TYPE ?	–	X/AX.XX	2 BAY SIGN W/ BRAILLE/SCHEDULE CASE/MAP
40	01	GRAPHIC M/11			ANCHOR	5/A–4.8	ACCESSIBLE PARKING VAN ACCESSIBLE
41	05	GRAPHIC Q/11			ANCHOR	5/A–4.8	ACCESSIBLE PARKING

NOTE:

1. REFER TO PLAN SHEETS [A–1.1 – A–1.12] FOR SIGN LOCATIONS EXCEPT AS NOTED OTHERWISE.
2. REFER TO SHEET A–6.2 FOR SIGN GRAPHICS.
3. REFER TO SHEETS [A–6.3 – A–6.–] FOR FRAME TYPES AND DETAILS.
4. FIBERGLASS PANELS WITHOUT GRAPHIC CONTENT SHALL BE BLANK WHITE (TYP.)

90% SUBMITTAL
NOT FOR CONSTRUCTION

FILE NAME: C:\Documents and Settings\Mackintosh LBA\local settings\temp\AcPublish_1604\ 05 A–SN0001.dwg
PLOT DATE: Sep 02, 2011 – 9:39am

MASSACHUSETTS BAY TRANSPORTATION AUTHORITY

FITCHBURG COMMUTER RAIL LINE
IMPROVEMENT PROJECT
CONTRACT NO. G67PS01

SOUTH ACTON STATION
SIGN SCHEDULE

ISSUE	DATE	DESCRIPTION	BY	CHKD.	APP.

HNTB
300 APOLLO DRIVE
CHELMSFORD, MA 01824
(978) 905–4000

Lozano, Baskin, and Associates, Inc.
Architecture • Urban Design • City Planning
205 Mt. Auburn St. Watertown, MA 02472

PROJECT MANAGER Date

MASSACHUSETTS BAY TRANSPORTATION AUTHORITY
APPROVED BY:
PROJECT MANAGER Date

HORIZ: N/A	DES. BY	DR. BY	CHK. BY	PLAN NO. 169524	ISSUE
VERT: N/A	MB	DW	MB		
DATE: 09/08/11				SHEET A–6.1	

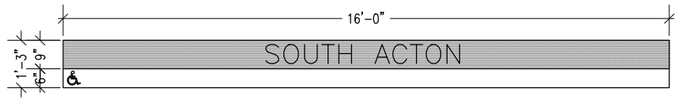

1 GRAPHIC 01
SCALE : 1/2" = 1'-0"

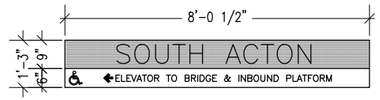

2 GRAPHIC 02
SCALE : 1/2" = 1'-0"

3 GRAPHIC 03
SCALE : 1/2" = 1'-0"

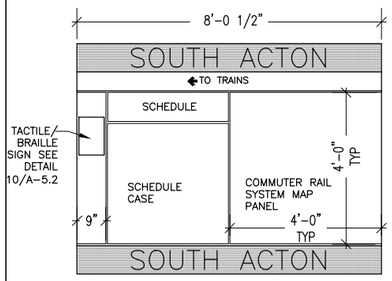

4 GRAPHIC 04
SCALE : 1/2" = 1'-0"

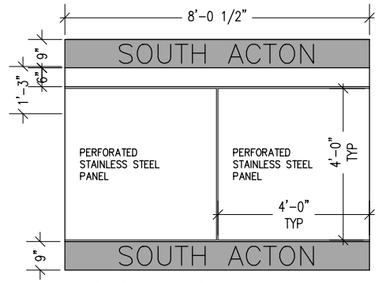

5 GRAPHIC 05
SCALE : 1/2" = 1'-0"

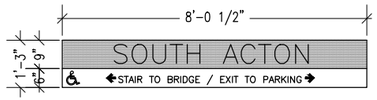

6 GRAPHIC 06
SCALE : 1/2" = 1'-0"

7 GRAPHIC 07
SCALE : 1/2" = 1'-0"

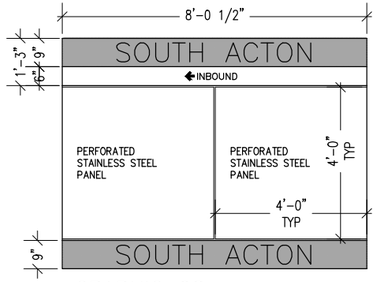

8 GRAPHIC 08
SCALE : 1/2" = 1'-0"

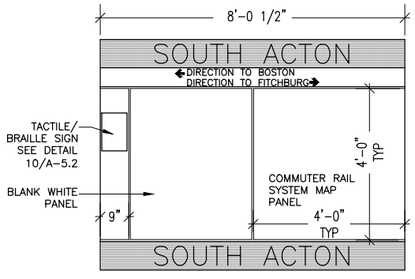

9 GRAPH 09
SCALE : 1/2" = 1'-0"

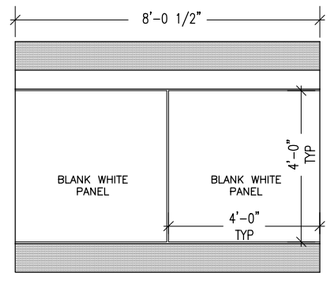

15A GRAPH 15A
SCALE : 1/2" = 1'-0"

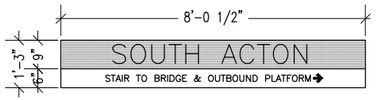

10 GRAPHIC 10
SCALE : 1/2" = 1'-0"

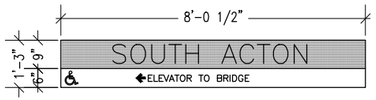

11 GRAPHIC 11
SCALE : 1/2" = 1'-0"

12 GRAPHIC 12
SCALE : 1/2" = 1'-0"

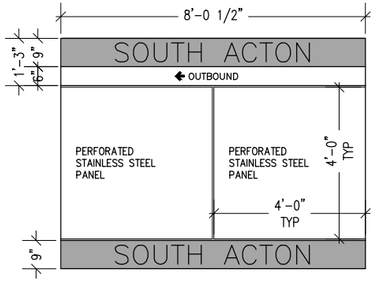

13 GRAPHIC 13
SCALE : 1/2" = 1'-0"

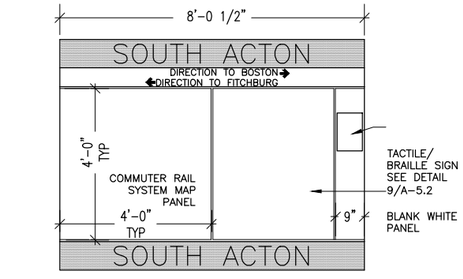

14 GRAPH 14
SCALE : 1/2" = 1'-0"

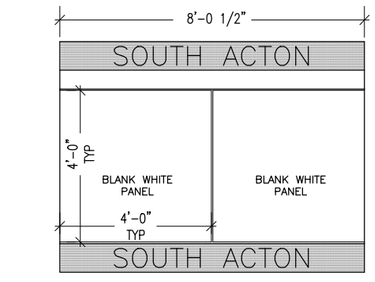

15 GRAPH 15
SCALE : 1/2" = 1'-0"

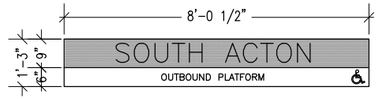

16 GRAPHIC 16
SCALE : 1/2" = 1'-0"

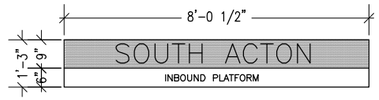

17 GRAPHIC 17
SCALE : 1/2" = 1'-0"

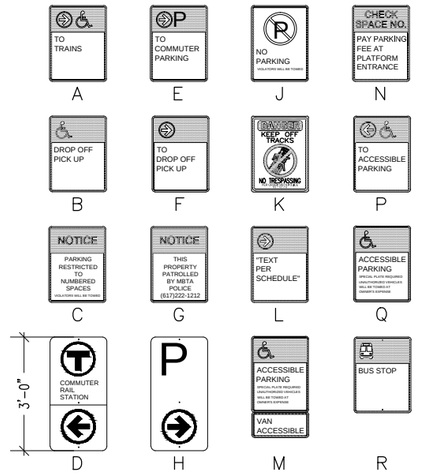

18 TRAFFIC SIGNS
SCALE : 1/2" = 1'-0"

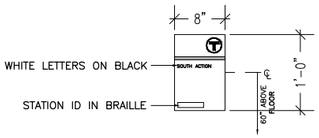

19 TACTILE/BRAILLE SIGN
SCALE : 1" = 1'-0"

"T" LOGO PROPORTIONS FOR DIAMETER LARGER THAN 4"
NTS

NOTES:

1. ALL TEXT TO BE IN MBTA STANDARD, HELVETICA MEDIUM.
2. ALL TACTILE/BRAILLE LETTERING SHALL BE MINIMUM 5/8" HIGH.
3. TACTILE/BRAILLE SIGNS SHALL BE MOUNTED CENTERLINE OF SIGN 60" ABOVE PLATFORM/ SIDEWALK SURFACE.
4. GRAPHICS SHOWN ARE FOR CONTENT ONLY. REFER TO CURRENT MBTA GRAPHIC STANDARDS FOR COMPLETE DESIGN GUIDELINES.
5. REFER TO SCHEDULE FOR SIGN MOUNTING AND FRAMING DETAILS.

COLOR KEY:

MBTA STANDARD COMMUTER RAIL PURPLE COLOR W/ WHITE LETTERS

MBTA APPROVED WHITE W/ BLACK LETTERS

90% SUBMITTAL
NOT FOR CONSTRUCTION

MASSACHUSETTS BAY TRANSPORTATION AUTHORITY

FITCHBURG COMMUTER RAIL LINE
IMPROVEMENT PROJECT
CONTRACT NO. G67PS01

SOUTH ACTON STATION
SIGN GRAPHICS

ISSUE	DATE	DESCRIPTION	BY	CHKD.	APP.

HNTB
300 APOLLO DRIVE
CHELMSFORD, MA 01824
(978) 905-4000

PROJECT MANAGER Date

MASSACHUSETTS BAY TRANSPORTATION AUTHORITY
APPROVED BY:
PROJECT MANAGER Date

Lozano, Baskin, and Associates, Inc.
Architecture • Urban Design • City Planning
205 Mt. Auburn St. Watertown, MA 02472

HORIZ: N/A	DES. BY	DR. BY	CHK. BY	PLAN NO. 169525	ISSUE
VERT: N/A	MB DW	DW	MB		
DATE: 09/08/11				SHEET A-6.2	

FILE NAME: C:\Documents and Settings\Mackintosh LBA\local settings\temp\AcPublish_1604\ 05 A-SN0001.dwg
PLOT DATE: Sep 02, 2011 - 9:40am

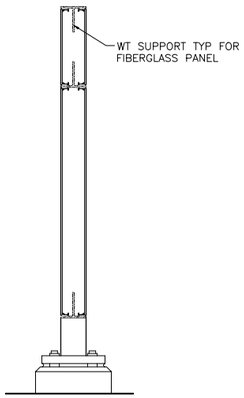

5 — ENTRY SIGN: TYPE A SECTION
SCALE: 1"=1'-0"

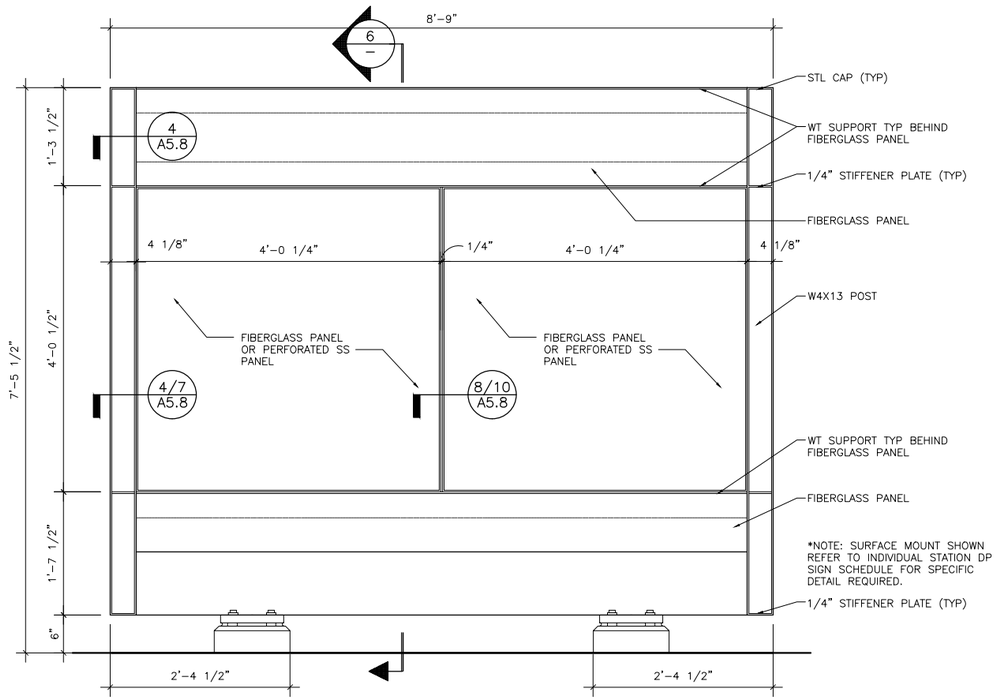

3 — 2 BAY SIGN: TYPE B ELEVATION
SCALE: 1"=1'-0"

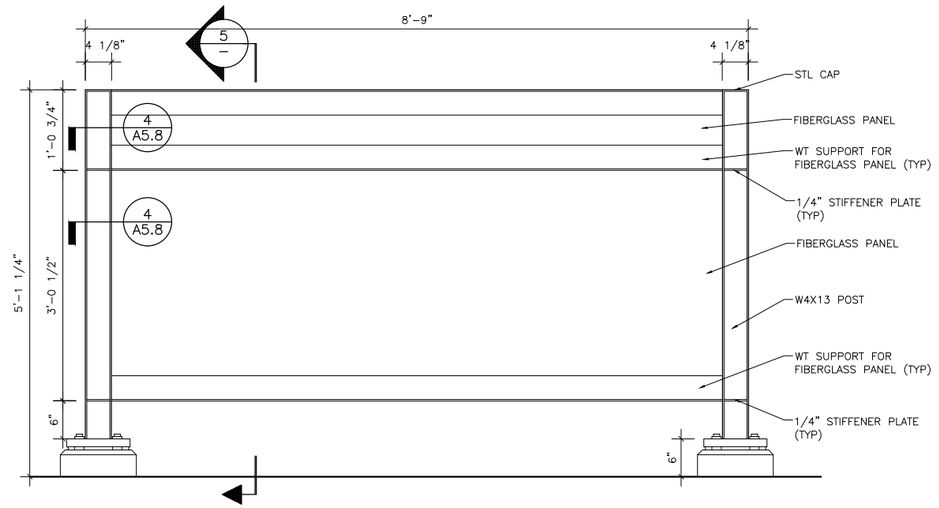

1 — ENTRY SIGN: TYPE A ELEVATION
SCALE: 1"=1'-0"

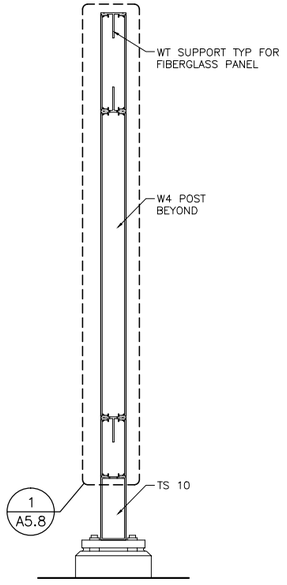

6 — 2 BAY SIGN: TYPE B SECTION
SCALE: 1"=1'-0"

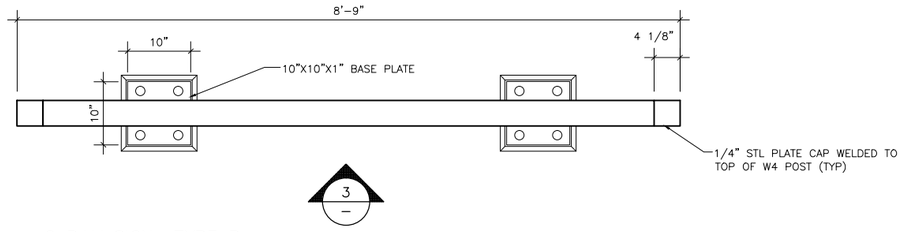

4 — 2 BAY SIGN: TYPE B PLAN
SCALE: 1"=1'-0"

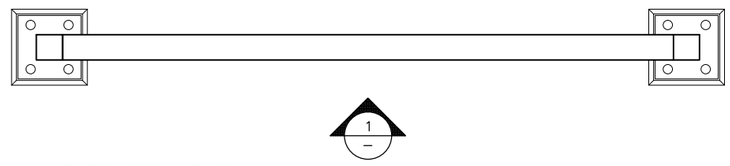

2 — ENTRY SIGN: TYPE A PLAN
SCALE: 1"=1'-0"

NOTES:
1. SEE STRUCTURAL DWGS FOR ANCHOR BOLT AND FND FOOTING DETAILS.
2. FIBERGLASS PANELS AT EACH SIDE TYPICAL UNLESS OTHERWISE NOTED.
3. REFER TO SIGN SCHEDULE FOR GRAPHIC CONTENT.
4. ALL TUBE CONNECTIONS SHALL BE BEVEL WELDS GROUND SMOOTH PRIOR TO GALVANIZING (UNO).
5. ALL WELDS FOR NON-TUBE SECTION CONNECTIONS SHALL BE FILLET WELDS PRIOR TO GALVANIZING (UNO).

SCALE: 1" = 1'-0"

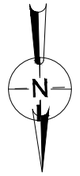

PROJECT NORTH

ISSUE	DATE	DESCRIPTION	BY	CHKD.	APP.

MASSACHUSETTS BAY TRANSPORTATION AUTHORITY

FITCHBURG COMMUTER RAIL LINE
IMPROVEMENT PROJECT
CONTRACT NO. G67PS01

SOUTH ACTON STATION
SIGN DETAILS
TYPE A & B

HNTB
300 APOLLO DRIVE
CHELMSFORD, MA 01824
(978) 905-4000

Lozano, Baskin, and Associates, Inc.
Architecture•Urban Design•City Planning
205 Mt. Auburn St. Watertown, MA 02472

MASSACHUSETTS BAY TRANSPORTATION AUTHORITY
APPROVED BY:

PROJECT MANAGER Date
PROJECT MANAGER Date

HORIZ: N/A	DES. BY	DR. BY	CHK. BY	PLAN NO. 169526	ISSUE
VERT: N/A	MB DW	DW	MB		
DATE: 09/08/11				SHEET A-6.3	

FILE NAME: C:\Documents and Settings\Mackintosh LBA\Local settings\temp\AcPublish_1604\ 05 A-SN0002.dwg
PLOT DATE: Sep 02, 2011 - 9:40am

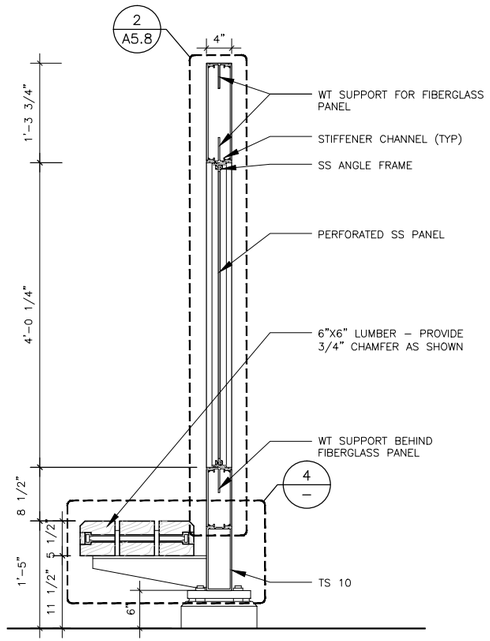

3 — SECTION
2 BAY-SINGLE BENCH: TYPE C
SCALE: 1"=1'-0"

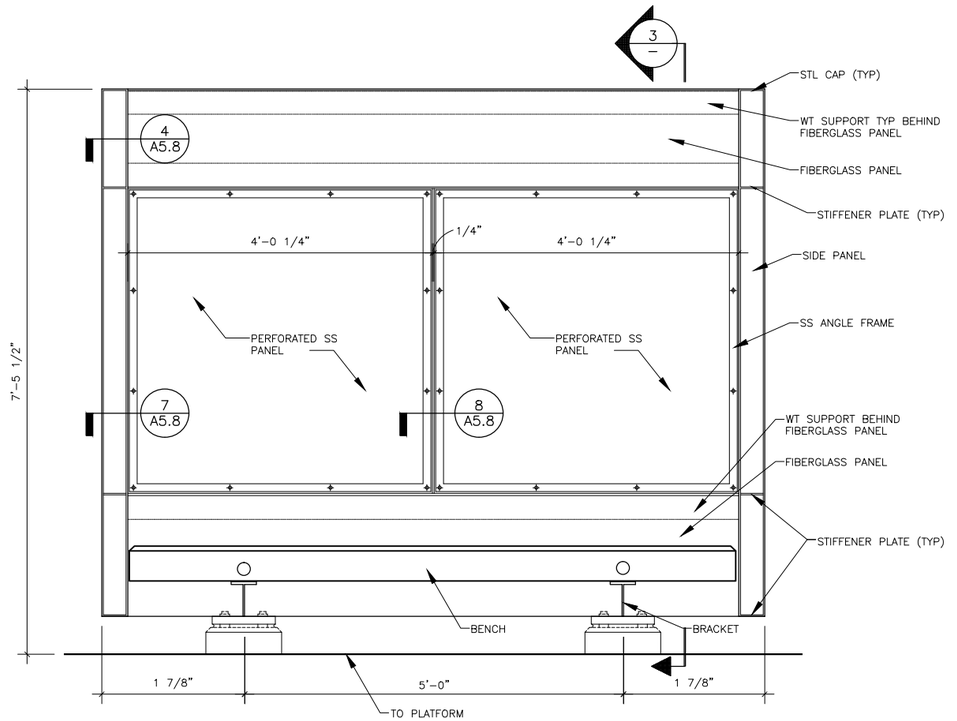

1 — ELEVATION
2 BAY-SINGLE BENCH: TYPE C
SCALE: 1"=1'-0"

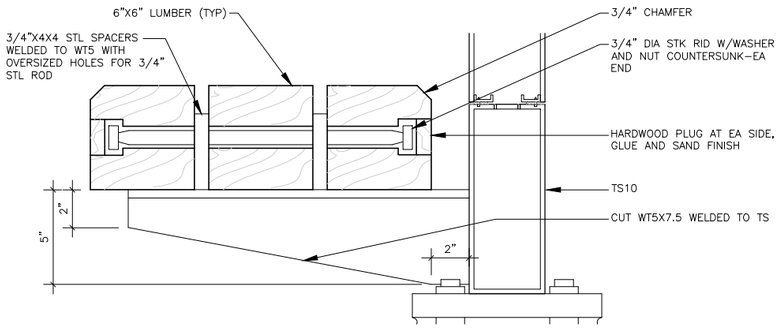

4 — DETAIL
2 BAY-SINGLE BENCH: TYPE C
SCALE: 3"=1'-0"

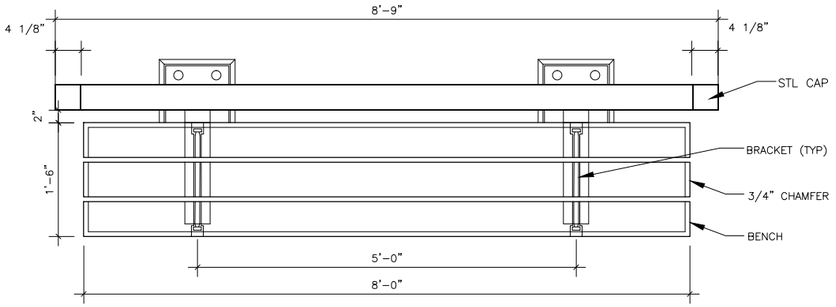

1 — PLAN
2 BAY-SINGLE BENCH: TYPE C
SCALE: 1"=1'-0"

NOTES:
1. SEE STRUCTURAL DWGS FOR ANCHOR BOLT AND FND FOOTING DETAILS.
2. FIBERGLASS PANELS AT EACH SIDE TYPICAL UNLESS OTHERWISE NOTED.
3. REFER TO INDIVIDUAL STATION DP FOR FIBERGLASS PANEL GRAPHIC CONTENT.
4. ALL TUBE CONNECTIONS SHALL BE BEVEL WELDS GROUND SMOOTH PRIOR TO GALVANIZING (UNO).
5. ALL WELDS FOR NON-TUBE SECTION CONNECTIONS SHALL BE FILLET WELDS PRIOR TO GALVANIZING (UNO).

0 1/2' 1' 2'
SCALE: 1" = 1'-0"

PROJECT NORTH

ISSUE	DATE	DESCRIPTION	BY	CHKD.	APP.

MASSACHUSETTS BAY TRANSPORTATION AUTHORITY

FITCHBURG COMMUTER RAIL LINE
IMPROVEMENT PROJECT
CONTRACT NO. G67PS01

SOUTH ACTON STATION
SIGN DETAILS
TYPE C

HNTB
300 APOLLO DRIVE
CHELMSFORD, MA 01824
(978) 905-4000

Lozano, Baskin, and Associates, Inc.
Architecture • Urban Design • City Planning
205 Mt. Auburn St. Watertown, MA 02472

MASSACHUSETTS BAY TRANSPORTATION AUTHORITY
APPROVED BY:

PROJECT MANAGER Date | PROJECT MANAGER Date

HORIZ: N/A	DES. BY	DR. BY	CHK. BY	PLAN NO. 169527	ISSUE
VERT: N/A	MB	DW	MB		
DATE: 09/08/11	DW			SHEET A-6.4	

FILE NAME: C:\Documents and Settings\Mackintosh LBA\local settings\temp\AcPublish_1604\ 05 A-SN0002.dwg
PLOT DATE: Sep 02, 2011 - 9:40am

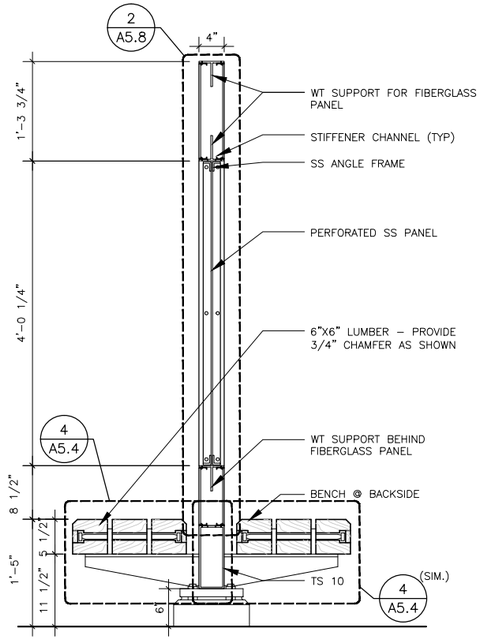

3 — 2 BAY–DOUBLE BENCH: TYPE D SECTION

SCALE: 1"=1'–0"

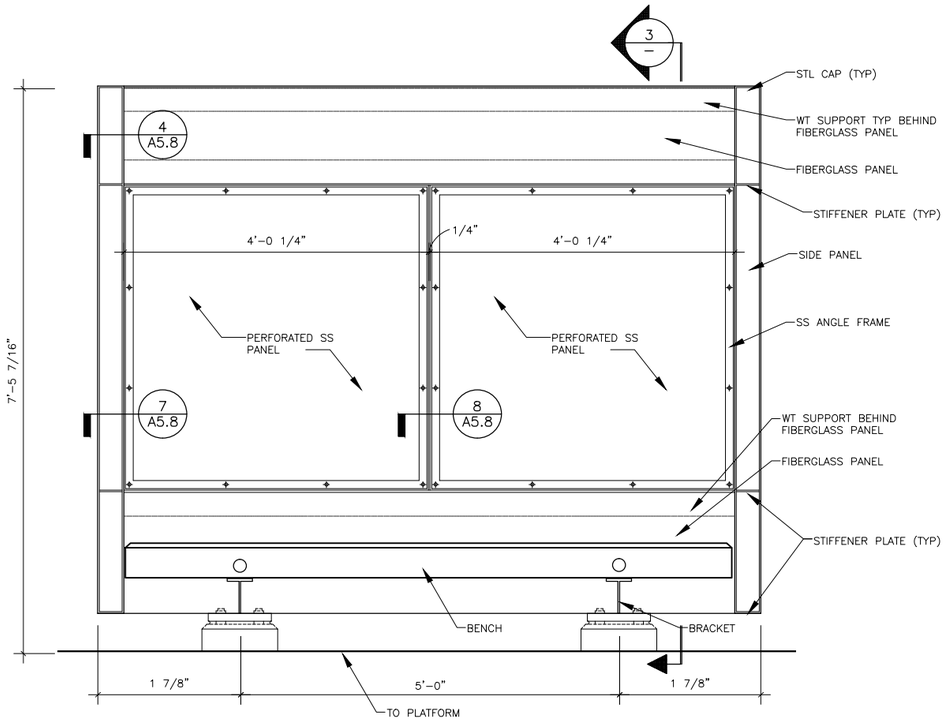

1 — 2 BAY–DOUBLE BENCH: TYPE D ELEVATION

SCALE: 1"=1'–0"

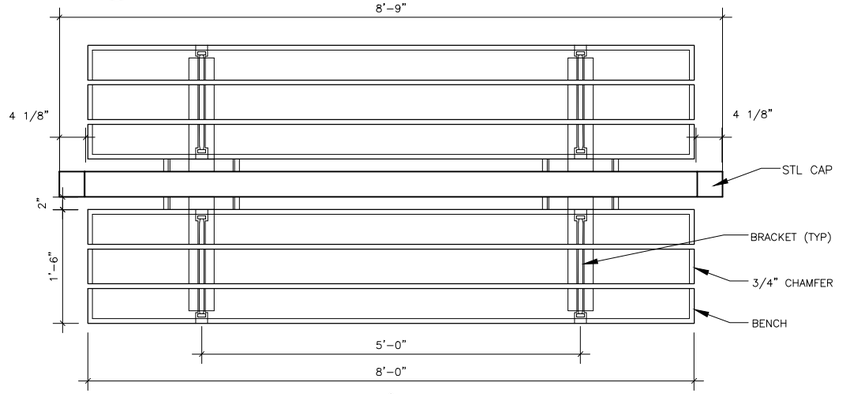

2 — 2 BAY–DOUBLE BENCH: TYPE D PLAN

SCALE: 1"=1'–0"

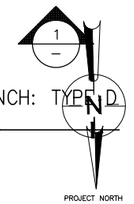

NOTES:
1. SEE STRUCTURAL DWGS FOR ANCHOR BOLT AND FND FOOTING DETAILS.
2. FIBERGLASS PANELS AT EACH SIDE TYPICAL UNLESS OTHERWISE NOTED.
3. REFER TO INDIVIDUAL STATION DP FOR FIBERGLASS PANEL GRAPHIC CONTENT.
4. ALL TUBE CONNECTIONS SHALL BE BEVEL WELDS GROUND SMOOTH PRIOR TO GALVANIZING (UNO).
5. ALL WELDS FOR NON–TUBE SECTION CONNECTIONS SHALL BE FILLET WELDS PRIOR TO GALVANIZING (UNO).

0 1/2' 1' 2'

SCALE: 1" = 1'-0"

ISSUE	DATE	DESCRIPTION	BY	CHKD.	APP.

Lozano, Baskin, and Associates, Inc.
Architecture•Urban Design•City Planning
205 Mt. Auburn St. Watertown, MA 02472

HNTB
300 APOLLO DRIVE
CHELMSFORD, MA 01824
(978) 905–4000

PROJECT MANAGER Date

MASSACHUSETTS BAY TRANSPORTATION AUTHORITY

APPROVED BY:

PROJECT MANAGER Date

MASSACHUSETTS BAY TRANSPORTATION AUTHORITY

FITCHBURG COMMUTER RAIL LINE
IMPROVEMENT PROJECT
CONTRACT NO. G67PS01

SOUTH ACTON STATION
SIGN DETAILS
TYPE D

HORIZ: N/A	DES. BY	DR. BY	CHK. BY
VERT: N/A	MB	DW	MB
DATE: 09/08/11	DW		

PLAN NO. 169528

SHEET A–6.5

ISSUE

FILE NAME: C:\Documents and Settings\Mackintosh LBA\local settings\temp\AcPublish_1604\ 05 A–SN0002.dwg
PLOT DATE: Sep 02, 2011 – 9:40am

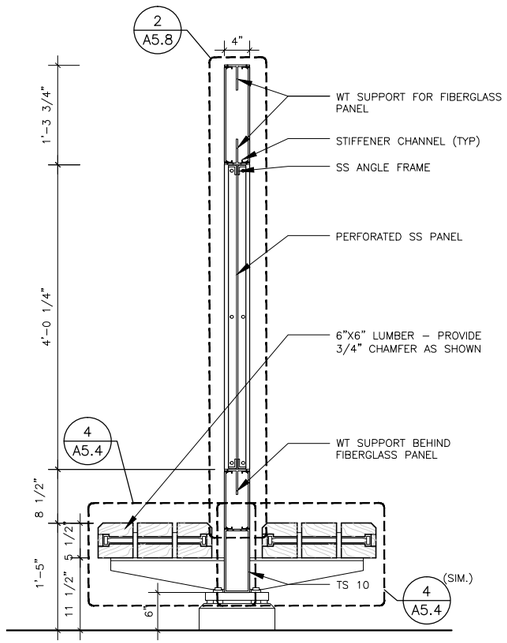

3 — 2 BAY–DOUBLE BENCH: TYPE E SECTION

SCALE: 1"=1'-0"

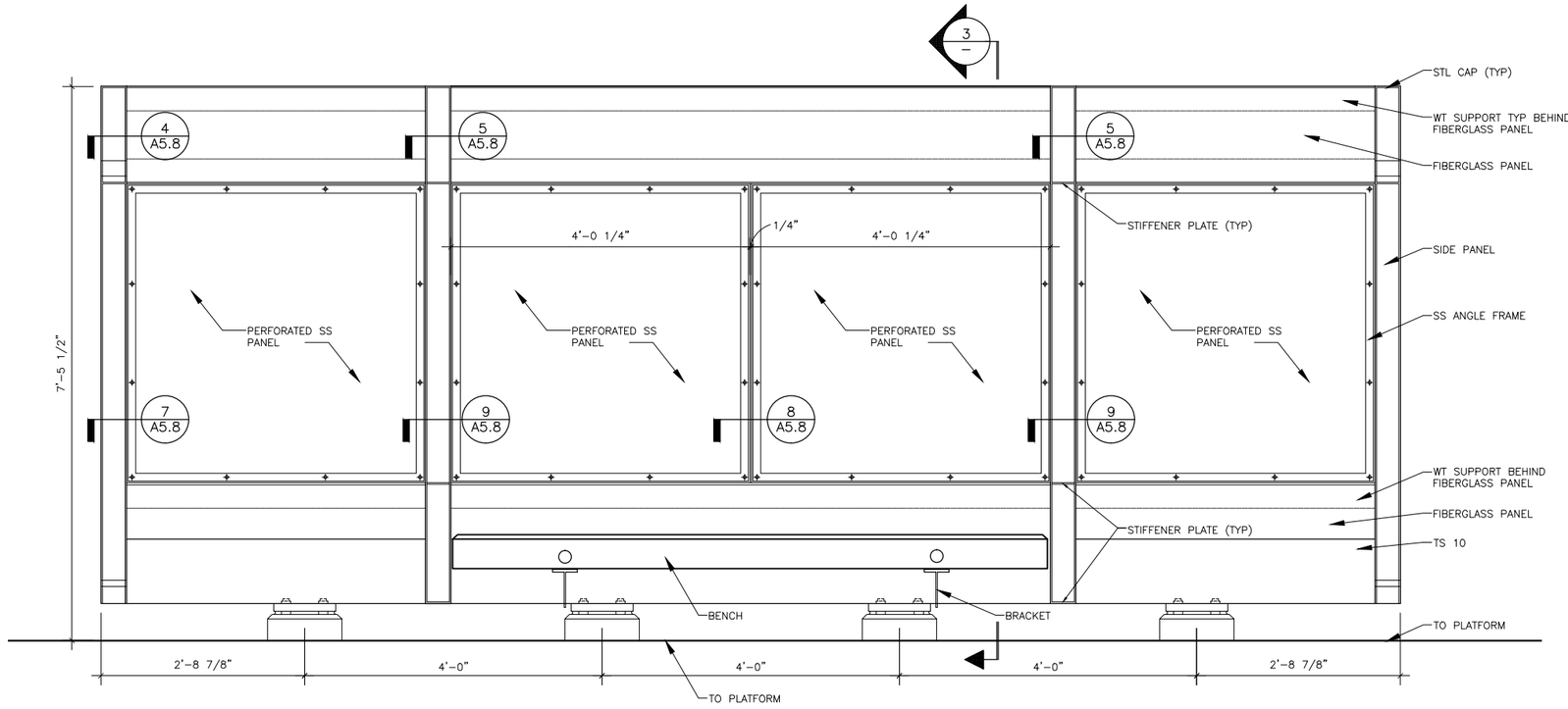

1 — 4 BAY–DOUBLE BENCH: TYPE E ELEVATION

SCALE: 1"=1'-0"

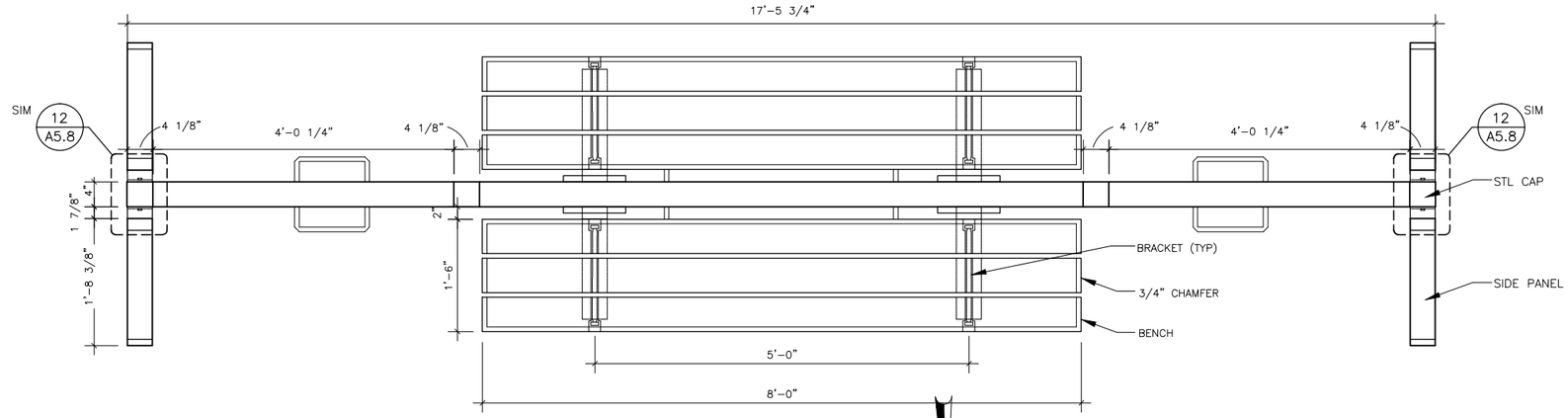

2 — 2 BAY–DOUBLE BENCH: TYPE E PLAN

SCALE: 1"=1'-0"

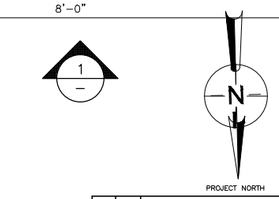

NOTES:
1. SEE STRUCTURAL DWGS FOR ANCHOR BOLT AND FND FOOTING DETAILS.
2. FIBERGLASS PANELS AT EACH SIDE TYPICAL UNLESS OTHERWISE NOTED.
3. REFER TO INDIVIDUAL STATION DP FOR FIBERGLASS PANEL GRAPHIC CONTENT.
4. ALL TUBE CONNECTIONS SHALL BE BEVEL WELDS GROUND SMOOTH PRIOR TO GALVANIZING (UNO).
5. ALL WELDS FOR NON–TUBE SECTION CONNECTIONS SHALL BE FILLET WELDS PRIOR TO GALVANIZING (UNO).

0 1/2' 1' 2'
SCALE: 1" = 1'-0"

ISSUE	DATE	DESCRIPTION	BY	CHKD.	APP.

Lozano, Baskin, and Associates, Inc.
Architecture•Urban Design•City Planning
205 Mt. Auburn St. Watertown, MA 02472

MASSACHUSETTS BAY TRANSPORTATION AUTHORITY

FITCHBURG COMMUTER RAIL LINE
IMPROVEMENT PROJECT
CONTRACT NO. G67PS01

SOUTH ACTON STATION
SIGN DETAILS
TYPE E

HNTB
300 APOLLO DRIVE
CHELMSFORD, MA 01824
(978) 905–4000

PROJECT MANAGER Date

MASSACHUSETTS BAY TRANSPORTATION AUTHORITY
APPROVED BY:
PROJECT MANAGER Date

HORIZ: N/A	DES. BY	DR. BY	CHK. BY	PLAN NO. 169529	ISSUE
VERT: N/A	MB	DW	MB		
DATE: 09/08/11	DW			SHEET A–6.6	

FILE NAME: C:\Documents and Settings\Mackintosh LBA\local settings\temp\AcPublish_1604\ 05 A-SN0002.dwg
PLOT DATE: Sep 02, 2011 – 9:40am

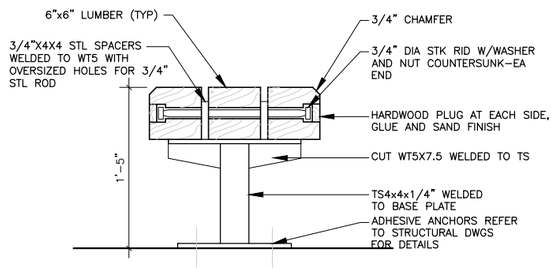

8 – SECTION: BENCH TYPE H
SCALE: 1"=1'-0"

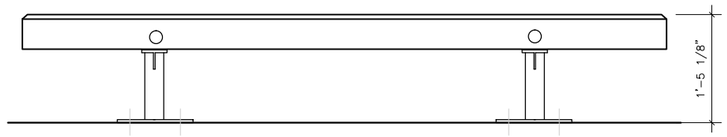

6 – ELEVATION: BENCH TYPE H
SCALE: 1"=1'-0"

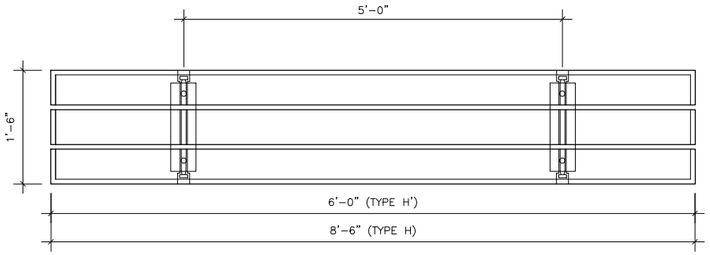

7 – PLAN: BENCH TYPE H
SCALE: 1"=1'-0"

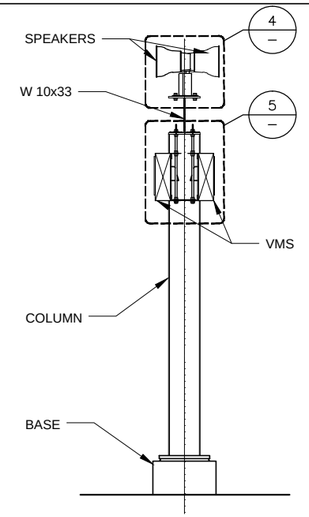

3 – VARIABLE MESSAGE SIGN-DOUBLE: TYPE G ELEVATION
SCALE: 1/2"=1'-0"

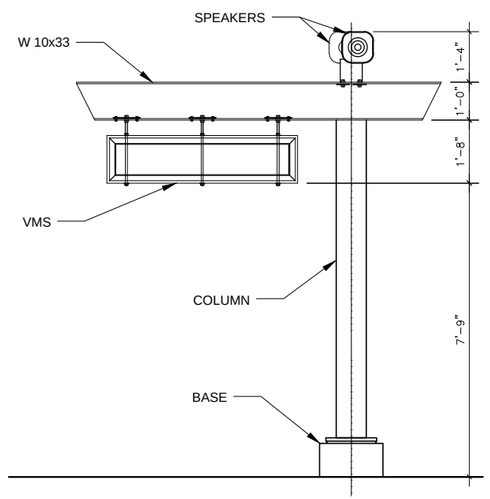

1 – VARIABLE MESSAGE SIGN: TYPE G ELEVATION
SCALE: 1/2"=1'-0"

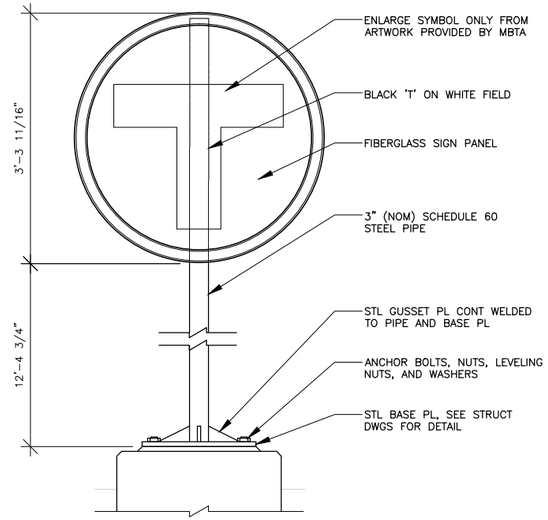

9 – ELEVATION: SIGN TYPE F
SCALE: 1"=1'-0"

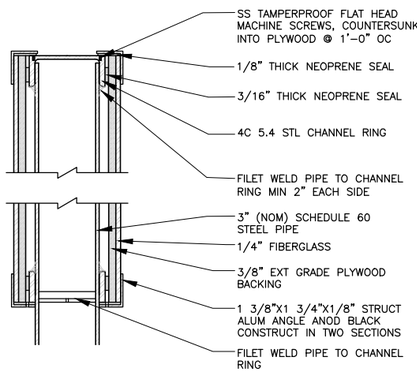

10 – SECTION: LOLLIPOP SIGN
1" = 1'-0"

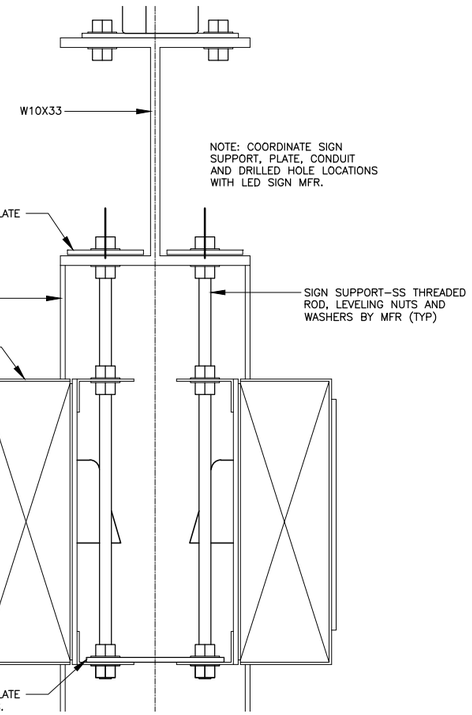

5 – DETAIL: AUDIBLE SIGNAL DEVICE
SCALE: 6"=1'-0"

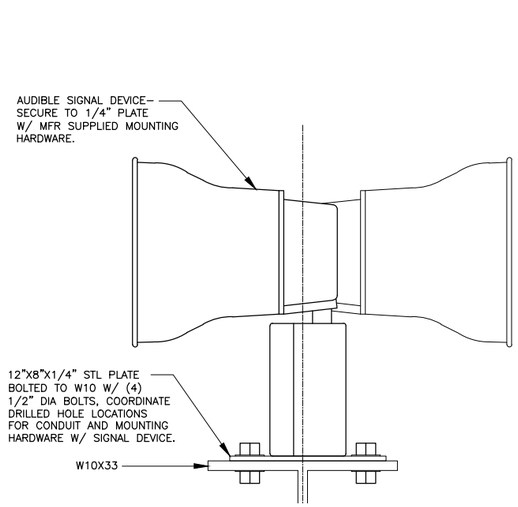

4 – DETAIL: AUDIBLE SIGNAL DEVICE
SCALE: 6"=1'-0"

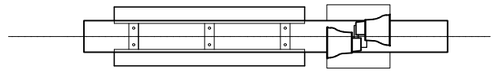

2 – VARIABLE MESSAGE SIGN-DOUBLE: TYPE G PLAN
SCALE: 1/2"=1'-0"

NOTES:
1. SEE STRUCTURAL DWGS FOR ANCHOR BOLT AND FND FOOTING DETAILS.
2. FIBERGLASS PANELS AT EACH SIDE TYPICAL UNLESS OTHERWISE NOTED.
3. REFER TO INDIVIDUAL STATION DP FOR FIBERGLASS PANEL GRAPHIC CONTENT.
4. ALL TUBE CONNECTIONS SHALL BE BEVEL WELDS GROUND SMOOTH PRIOR TO GALVANIZING (UNO).
5. ALL WELDS FOR NON-TUBE SECTION CONNECTIONS SHALL BE FILLET WELDS PRIOR TO GALVANIZING (UNO).

SCALE: 1/2" = 1'-0"

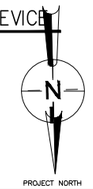

ISSUE	DATE	DESCRIPTION	BY	CHKD.	APP.

Lozano, Baskin, and Associates, Inc.
Architecture • Urban Design • City Planning
205 Mt. Auburn St. Watertown, MA 02472

MASSACHUSETTS BAY TRANSPORTATION AUTHORITY

FITCHBURG COMMUTER RAIL LINE
IMPROVEMENT PROJECT
CONTRACT NO. G67PS01

SOUTH ACTON STATION
SIGN DETAILS
TYPE F & G

HNTB
300 APOLLO DRIVE
CHELMSFORD, MA 01824
(978) 905-4000

PROJECT MANAGER — Date

MASSACHUSETTS BAY TRANSPORTATION AUTHORITY
APPROVED BY:
PROJECT MANAGER — Date

HORIZ: N/A	DES. BY	DR. BY	CHK. BY	PLAN NO. 169530	ISSUE
VERT: N/A	MB	DW	MB		
DATE: 09/08/11	DW			SHEET A-6.7	

FILE NAME: C:\Documents and Settings\Mackintosh LBA\Local settings\Temp\AcPublish_1604\ 05 A-SN0002.dwg
PLOT DATE: Sep 02, 2011 - 9:40am

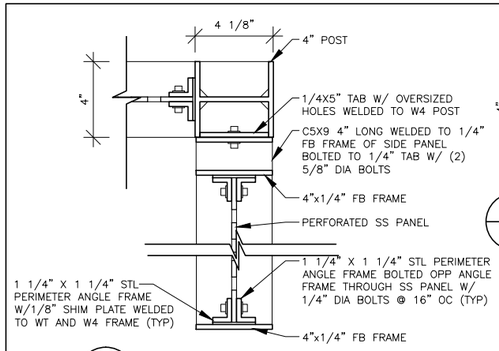

12 DETAIL: SIDE PANEL
– SCALE: 3"=1'-0"

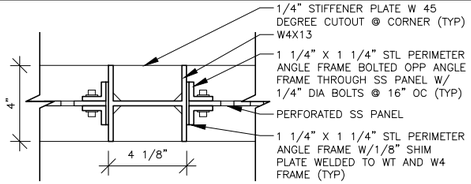

9 DETAIL: WINDSCREEN/POST/WINDSCREEN
– SCALE: 3"=1'-0"

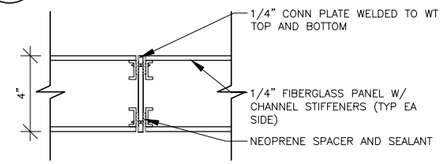

10 DETAIL: PANEL/PANEL
– SCALE: 3"=1'-0"

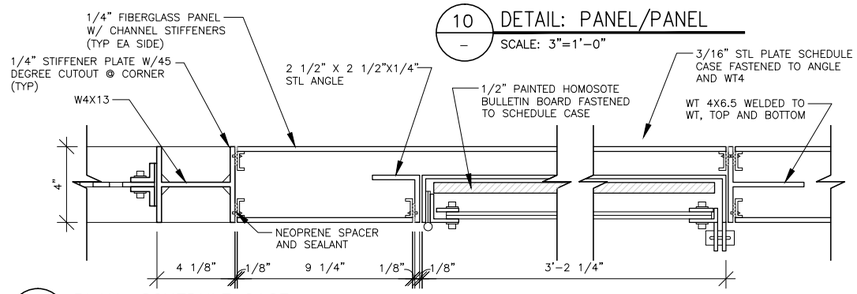

13 PLAN: SCHEDULE CASE
– SCALE: 3"=1'-0"

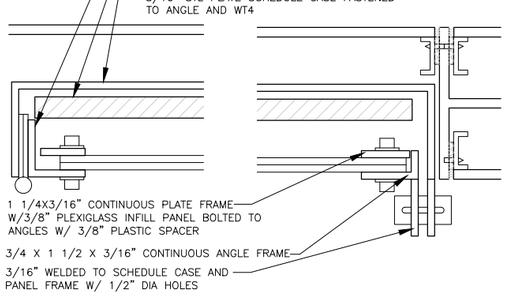

14 DETAIL: SCHEDULE CASE
– SCALE: 6"=1'-0"

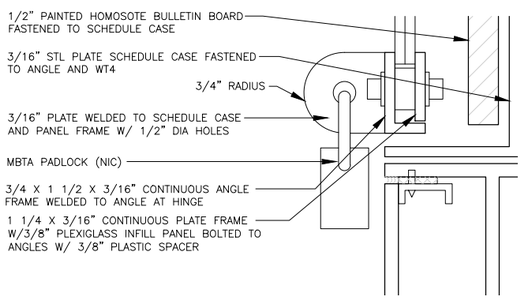

15 DETAIL: SCHEDULE CASE
– SCALE: 6"=1'-0"

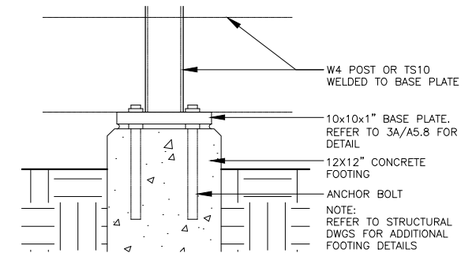

3 DETAIL: FOOTING MOUNT
– SCALE: 1 1/2"=1'-0"

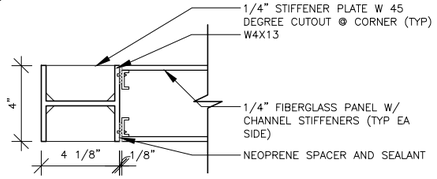

4 DETAIL: POST/PANEL
– SCALE: 3"=1'-0"

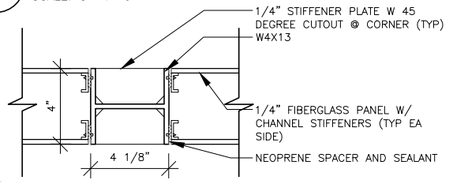

5 DETAIL: PANEL/ POST/PANEL
– SCALE: 3"=1'-0"

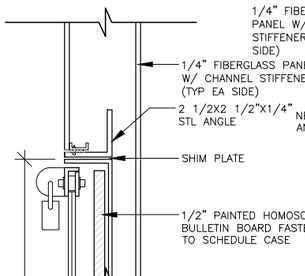

11 DETAIL: SCHEDULE CASE
– SCALE: 3"=1'-0"

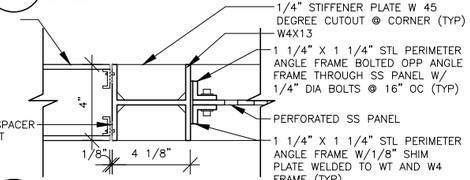

6 DETAIL: PANEL/ POST/WINDSCREEN
– SCALE: 3"=1'-0"

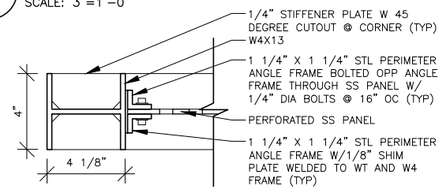

7 DETAIL: POST/WINDSCREEN
– SCALE: 3"=1'-0"

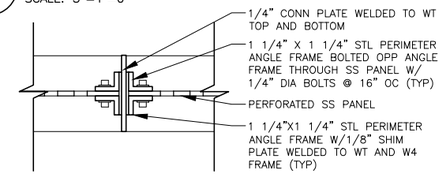

8 DETAIL: WINDSCREEN/WINDSCREEN
– SCALE: 3"=1'-0"

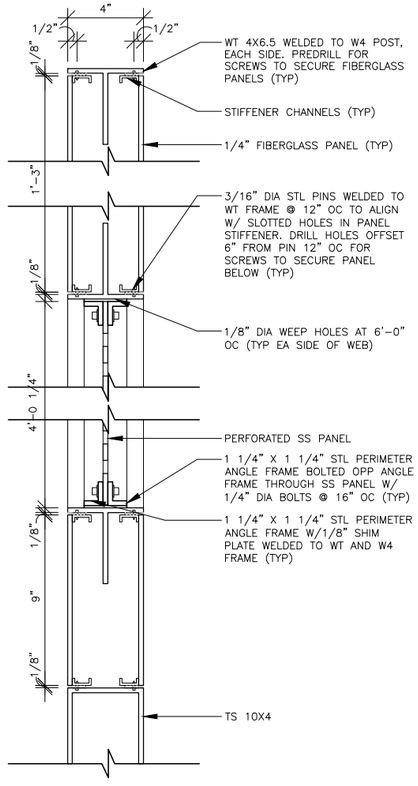

2 SECTION: WINDSCREEN
– SCALE: 3"=1'-0"

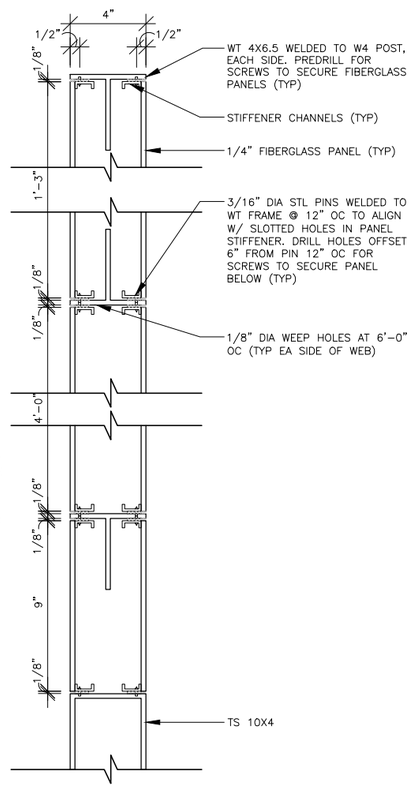

1 SECTION: SIGN
– SCALE: 3"=1'-0"

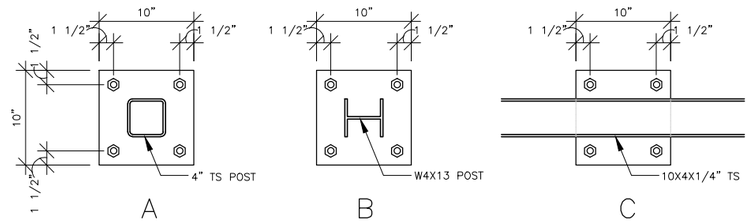

3A DETAIL: BASE PLATE
– SCALE: 1 1/2"=1'-0"

NOTE:
10"X10"X1" STEEL BASE PLATE W/ OVERSIZED HOLES (TYP)
REFER TO STRUCTURAL DWGS FOR ADDITIONAL BASE PLATE DETAILS.

NOTES:
1. SEE STRUCTURAL DWGS FOR ANCHOR BOLT AND FND FOOTING DETAILS.
2. FIBERGLASS PANELS AT EACH SIDE TYPICAL UNLESS OTHERWISE NOTED.
3. REFER TO INDIVIDUAL STATION DP FOR FIBERGLASS PANEL GRAPHIC CONTENT.
4. ALL TUBE CONNECTIONS SHALL BE BEVEL WELDS GROUND SMOOTH PRIOR TO GALVANIZING (UNO).
5. ALL WELDS FOR NON-TUBE SECTION CONNECTIONS SHALL BE FILLET WELDS PRIOR TO GALVANIZING (UNO).

0 1/4" 1/2" 1'
SCALE: 1/2" = 1'-0"

PROJECT NORTH

MASSACHUSETTS BAY TRANSPORTATION AUTHORITY
FITCHBURG COMMUTER RAIL LINE IMPROVEMENT PROJECT
CONTRACT NO. G67PS01

SOUTH ACTON STATION SIGN DETAILS MISC

ISSUE	DATE	DESCRIPTION	BY	CHKD.	APP.

HNTB 300 APOLLO DRIVE CHELMSFORD, MA 01824 (978) 905-4000

PROJECT MANAGER Date

MASSACHUSETTS BAY TRANSPORTATION AUTHORITY
APPROVED BY:
PROJECT MANAGER Date

Lozano, Baskin, and Associates, Inc.
Architecture•Urban Design•City Planning
205 Mt. Auburn St. Watertown, MA 02472

HORIZ: N/A	DES. BY	DR. BY	CHK. BY
VERT: N/A	MB	DW	MB
DATE: 09/08/11	DW		

PLAN NO. 169531
SHEET A-6.8
ISSUE

FILE NAME: C:\Documents and Settings\Mackintosh LBA\local settings\temp\AcPublish_1604\ 05 A-SN0002.dwg
PLOT DATE: Sep 02, 2011 - 9:40am

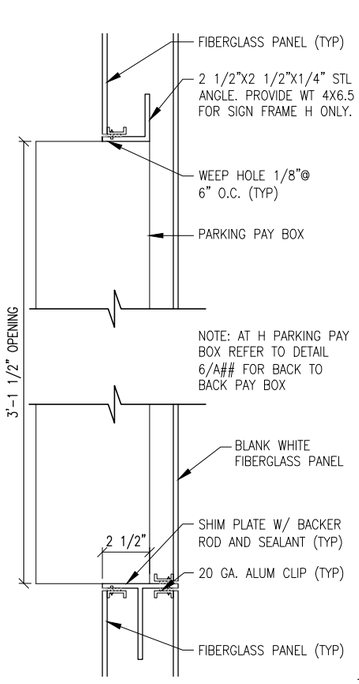

8 – SECTION: PAY BOX
SCALE: 3"=1'-0"

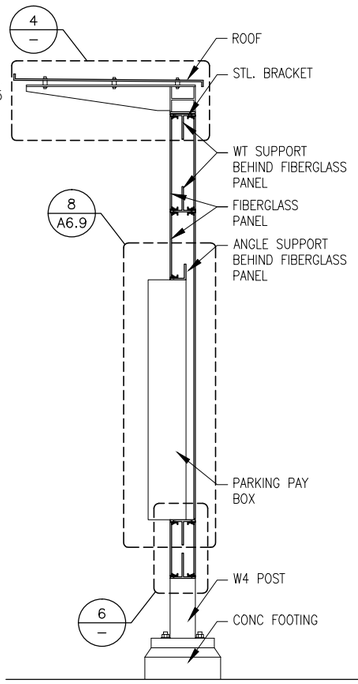

5 – SECTION: PAY BOX
SCALE: 1"=1'-0"

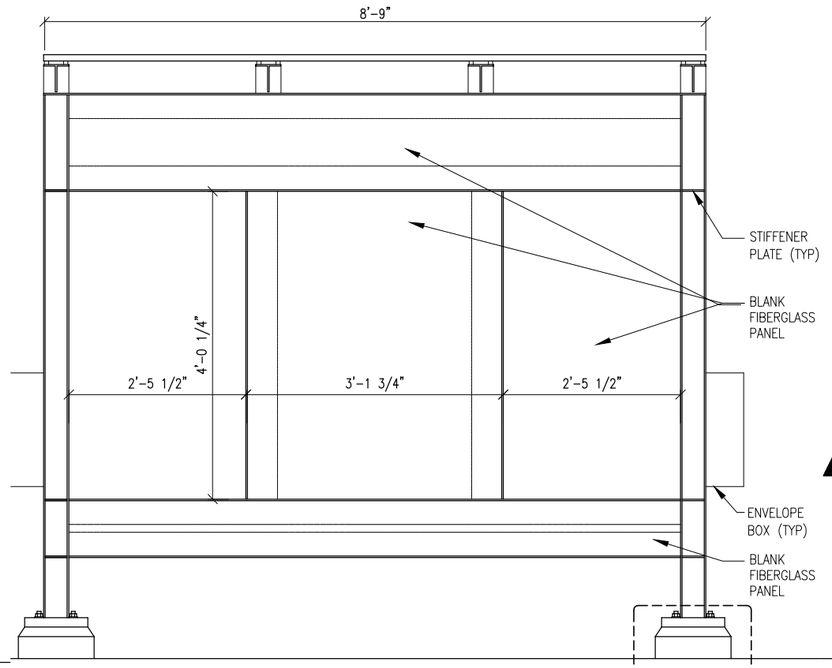

3 – ELEVATION: REAR SIGN–PARKING PAY BOX
SCALE: 1"=1'-0"

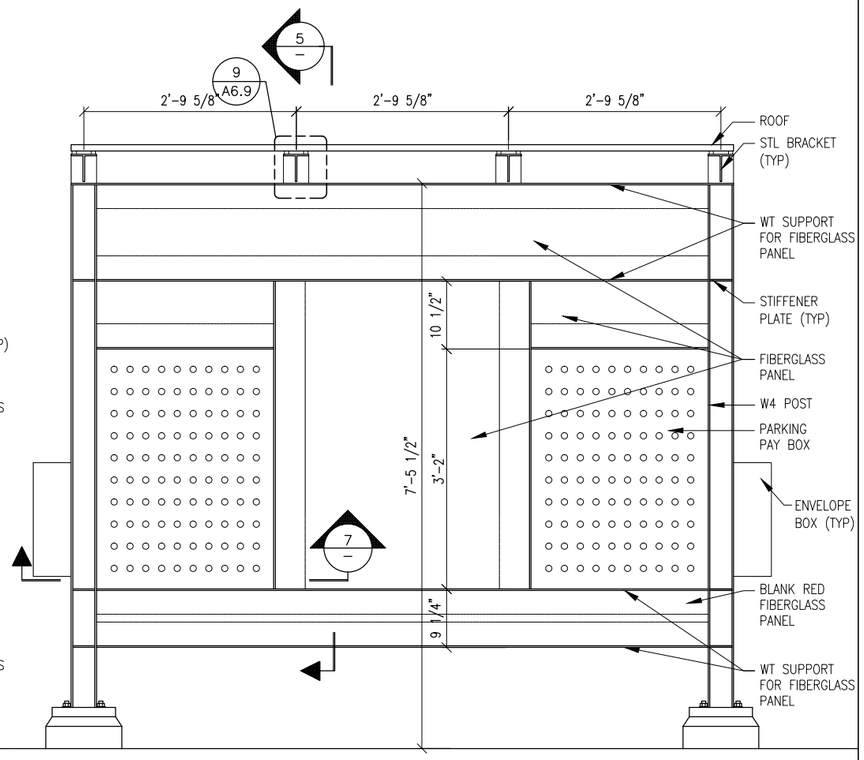

1 – ELEVATION: FRONT SIGN–PARKING PAY BOX
SCALE: 1"=1'-0"

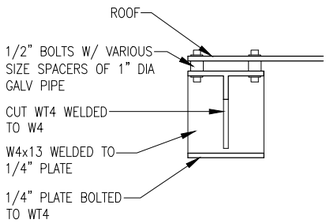

9 – DETAIL: ROOF
SCALE: 3"=1'-0"

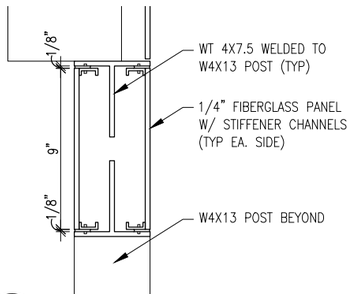

6 – SECTION: BLANK PANEL
SCALE: 3"=1'-0"

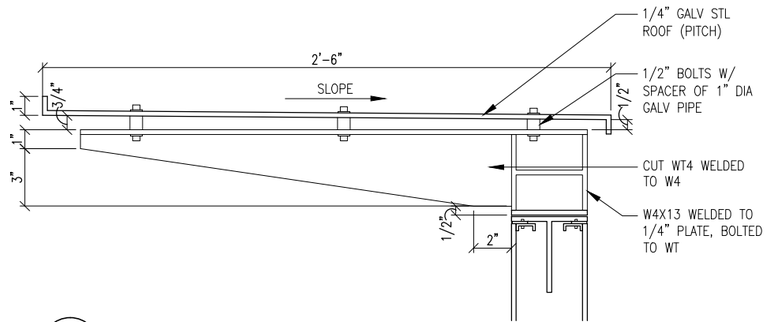

4 – DETAIL: ROOF
SCALE: 3"=1'-0"

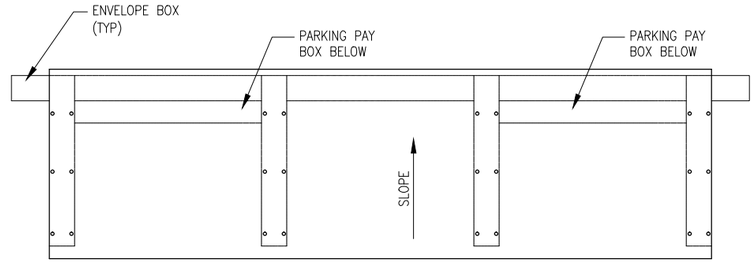

2 – PLAN: SIGN–PARKING PAY BOX
SCALE: 1"=1'-0"

NOTES:
1. SEE STRUCTURAL DWGS FOR ANCHOR BOLT AND FOUNDATION FOOTING DETAILS.
2. FIBERGLASS PANELS AT EACH SIDE TYPICAL UNLESS OTHERWISE NOTED.
3. REFER TO INDIVIDUAL STATION DP FOR FIBERGLASS PANEL GRAPHIC CONTENT.
4. ALL TUBE CONNECTIONS SHALL BE BEVEL WELDS GROUND SMOOTH PRIOR TO GALVANIZING (UNO).
5. ALL WELDS FOR NON–TUBE SECTION CONNECTIONS SHALL BE FILLET WELDS PRIOR TO GALVANIZING (UNO).
6. FIBERGLASS PANELS WITHOUT GRAPHIC CONTENT SHALL BE BLANK WHITE. (TYP)

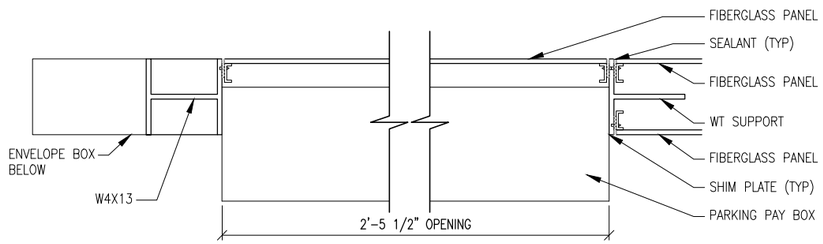

7 – SECTION: PAY BOX
SCALE: 3"=1'-0"

0 1/4' 1/2' 1'
SCALE: 1/2" = 1'-0"

MASSACHUSETTS BAY TRANSPORTATION AUTHORITY
FITCHBURG COMMUTER RAIL LINE IMPROVEMENT PROJECT
CONTRACT NO. G67PS01

SOUTH ACTON STATION PAY BOX DETAILS

ISSUE	DATE	DESCRIPTION	BY	CHKD.	APP.

HNTB
300 APOLLO DRIVE
CHELMSFORD, MA 01824
(978) 905-4000

MASSACHUSETTS BAY TRANSPORTATION AUTHORITY
APPROVED BY:
PROJECT MANAGER Date

PROJECT MANAGER Date

Lozano, Baskin, and Associates, Inc.
Architecture•Urban Design•City Planning
205 Mt. Auburn St. Watertown, MA 02472

HORIZ: N/A	DES. BY	DR. BY	CHK. BY
VERT: N/A	MB	DW	MB
DATE: 09/08/11	DW		

PLAN NO. 169532
SHEET A–6.9
ISSUE

FILE NAME: C:\Documents and Settings\Mackintosh LBA\local settings\temp\AcPublish_1604\ 05 A-SN0002.dwg
PLOT DATE: Sep 02, 2011 – 9:40am

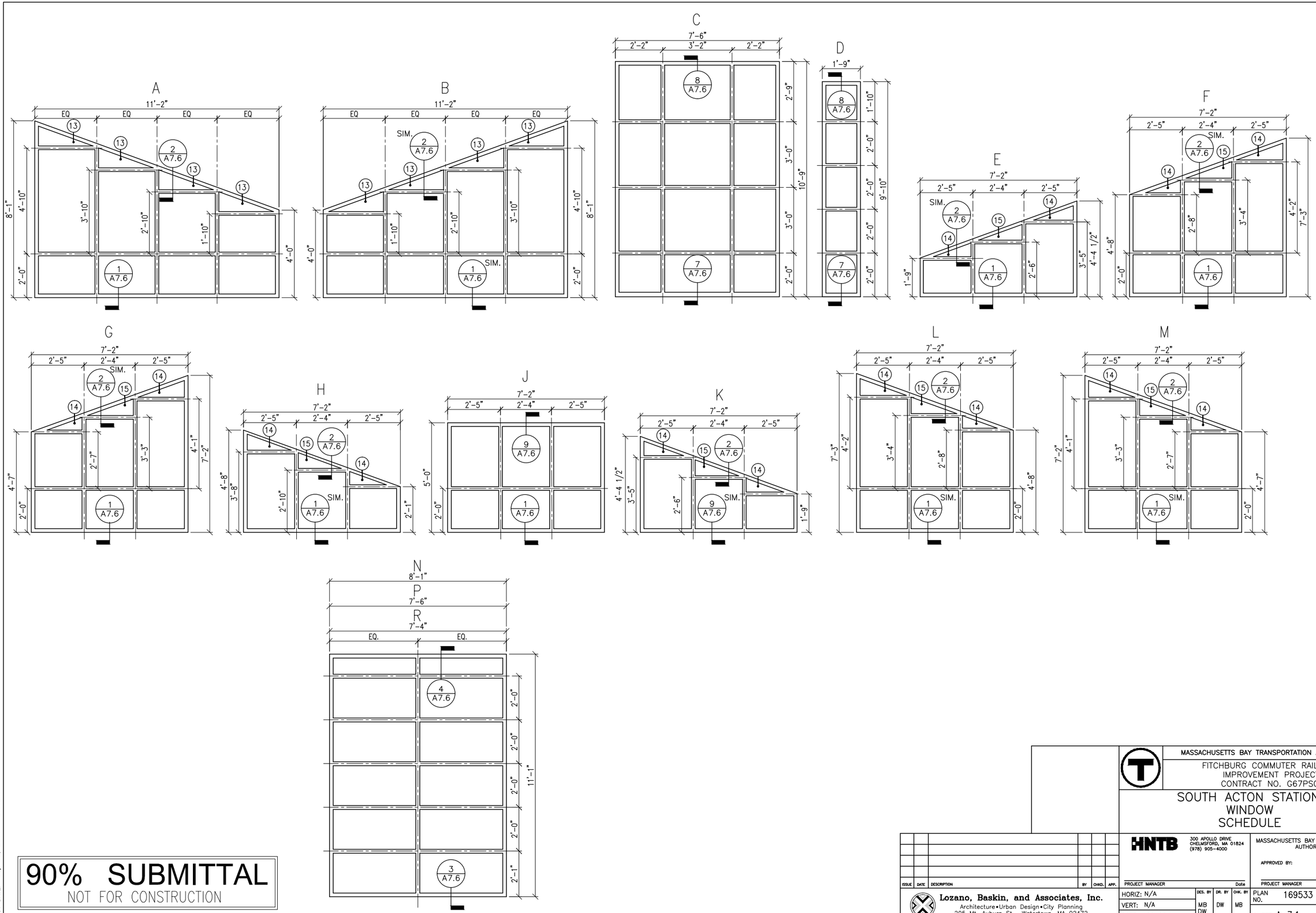

90% SUBMITTAL
NOT FOR CONSTRUCTION

FILE NAME: C:\Documents and Settings\Mackintosh LBA\local settings\temp\AcPublish_1604\ 06 A-SC0001.dwg
PLOT DATE: Sep 02, 2011 - 9:41am

MASSACHUSETTS BAY TRANSPORTATION AUTHORITY

FITCHBURG COMMUTER RAIL LINE
IMPROVEMENT PROJECT
CONTRACT NO. G67PS01

SOUTH ACTON STATION
WINDOW SCHEDULE

ISSUE	DATE	DESCRIPTION	BY	CHKD.	APP.

HNTB
300 APOLLO DRIVE
CHELMSFORD, MA 01824
(978) 905-4000

Lozano, Baskin, and Associates, Inc.
Architecture•Urban Design•City Planning
205 Mt. Auburn St. Watertown, MA 02472

MASSACHUSETTS BAY TRANSPORTATION AUTHORITY
APPROVED BY:

PROJECT MANAGER Date
PROJECT MANAGER Date

HORIZ: N/A	DES. BY	DR. BY	CHK. BY	PLAN NO. 169533	ISSUE
VERT: N/A	MB	DW	MB		
DATE: 09/08/11	DW			SHEET A-7.1	

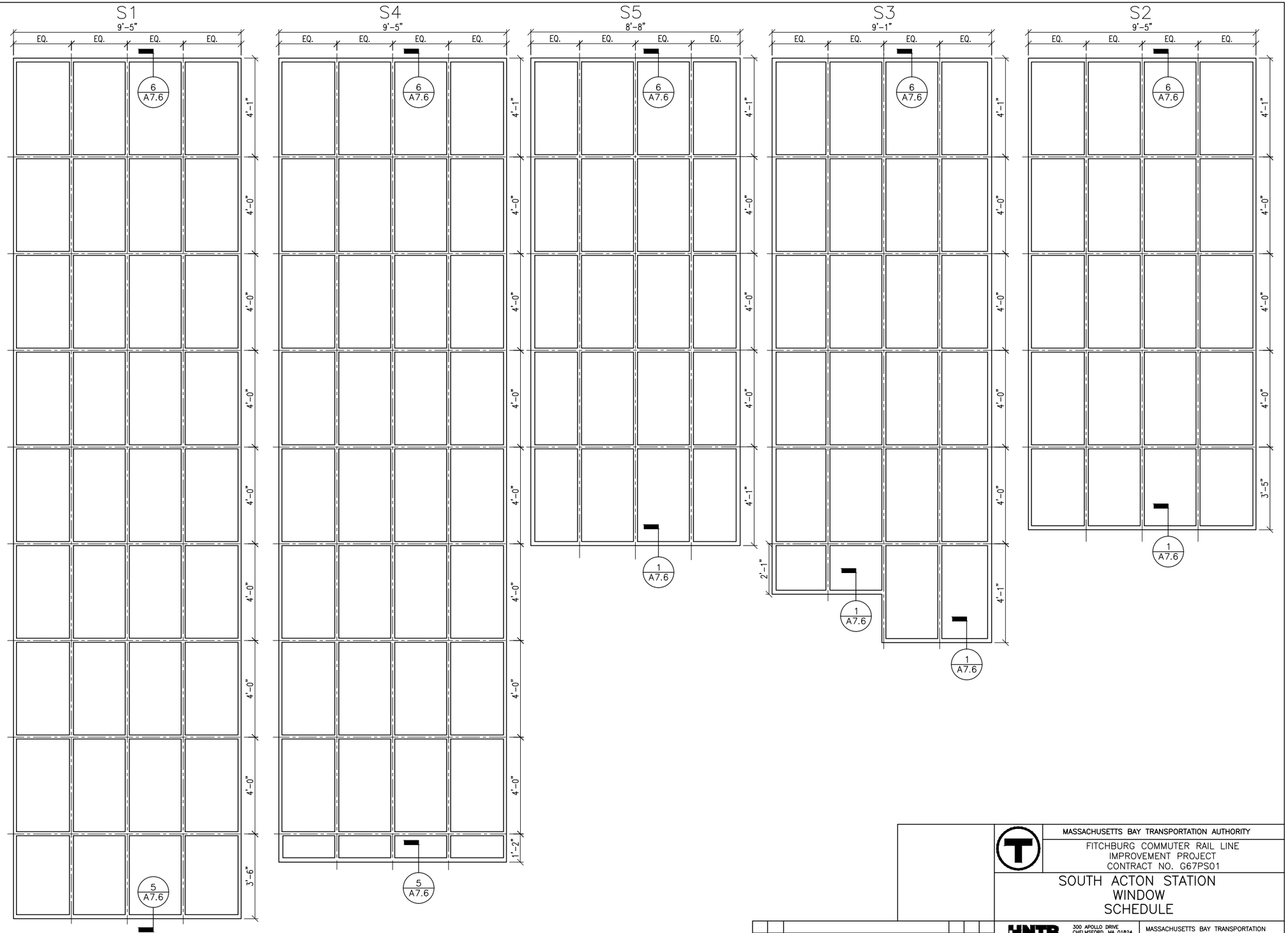

90% SUBMITTAL
NOT FOR CONSTRUCTION

FILE NAME: C:\Documents and Settings\Mackintosh LBA\Local settings\temp\AcPublish_1604\ 06 A-SC0001.dwg
PLOT DATE: Sep 02, 2011 - 9:41am

ISSUE	DATE	DESCRIPTION	BY	CHKD.	APP.

Lozano, Baskin, and Associates, Inc.
Architecture • Urban Design • City Planning
205 Mt. Auburn St. Watertown, MA 02472

MASSACHUSETTS BAY TRANSPORTATION AUTHORITY

FITCHBURG COMMUTER RAIL LINE
IMPROVEMENT PROJECT
CONTRACT NO. G67PS01

SOUTH ACTON STATION
WINDOW
SCHEDULE

HNTB
300 APOLLO DRIVE
CHELMSFORD, MA 01824
(978) 905-4000

PROJECT MANAGER Date

MASSACHUSETTS BAY TRANSPORTATION AUTHORITY
APPROVED BY:
PROJECT MANAGER Date

HORIZ: N/A	DES. BY	DR. BY	CHK. BY	PLAN NO. 169533	ISSUE
VERT: N/A	MB DW	DW	MB		
DATE: 09/08/11				SHEET A-7.2	

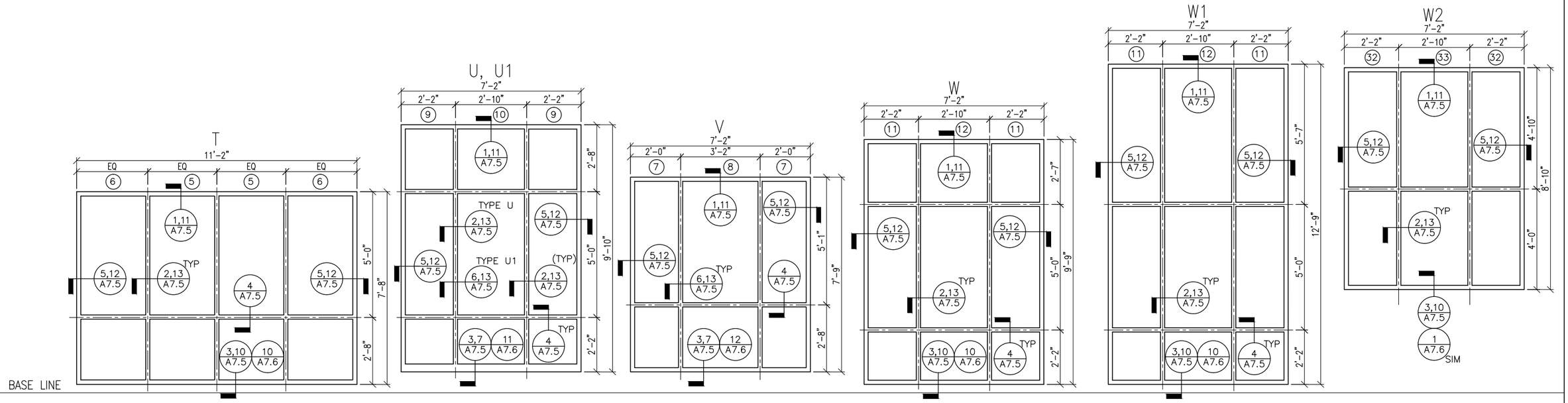

FILE NAME: C:\Documents and Settings\Mackintosh LBA\Local settings\temp\AcPublish_1604\ 06 A-SC0001.dwg
PLOT DATE: Sep 02, 2011 - 9:41am

90% SUBMITTAL
NOT FOR CONSTRUCTION

MASSACHUSETTS BAY TRANSPORTATION AUTHORITY

FITCHBURG COMMUTER RAIL LINE
IMPROVEMENT PROJECT
CONTRACT NO. G67PS01

SOUTH ACTON STATION
PROTECTIVE SCREEN
SCHEDULE

ISSUE	DATE	DESCRIPTION	BY	CHKD.	APP.

HNTB
300 APOLLO DRIVE
CHELMSFORD, MA 01824
(978) 905-4000

Lozano, Baskin, and Associates, Inc.
Architecture • Urban Design • City Planning
205 Mt. Auburn St. Watertown, MA 02472

MASSACHUSETTS BAY TRANSPORTATION AUTHORITY
APPROVED BY:

PROJECT MANAGER Date
PROJECT MANAGER Date

HORIZ: N/A	DES. BY	DR. BY	CHK. BY	PLAN NO. 169533	ISSUE
VERT: N/A	MB DW	DW	MB	SHEET A-7.3	
DATE: 09/08/11					

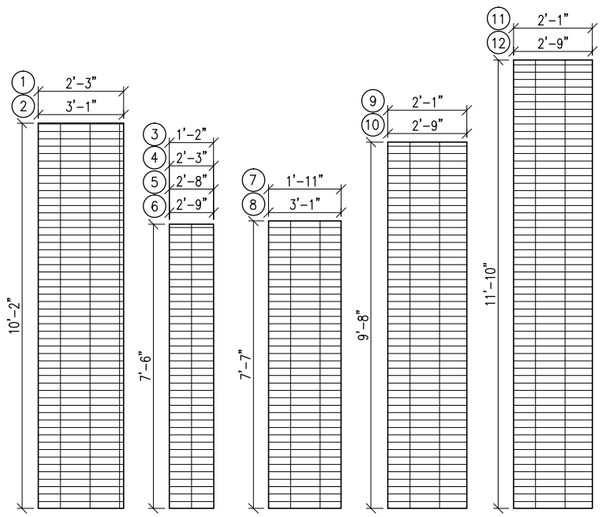

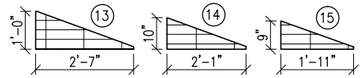

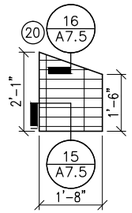

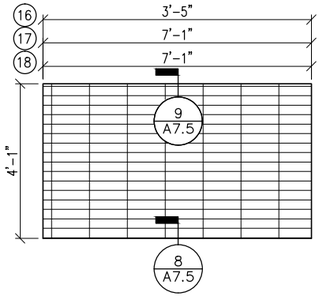

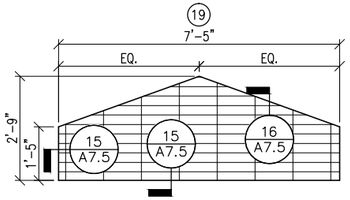

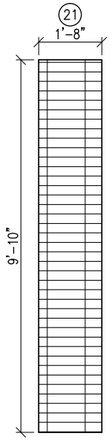

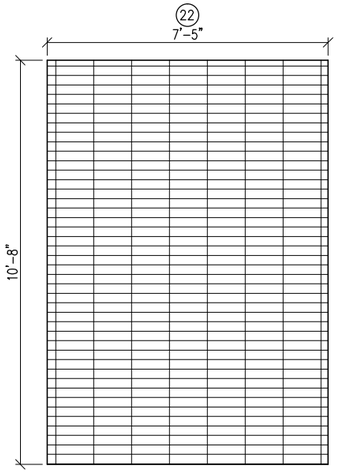

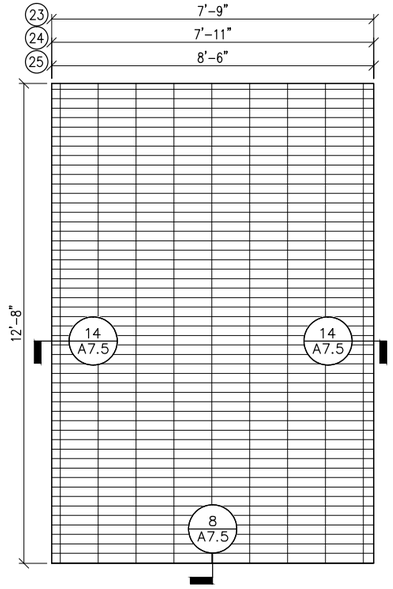

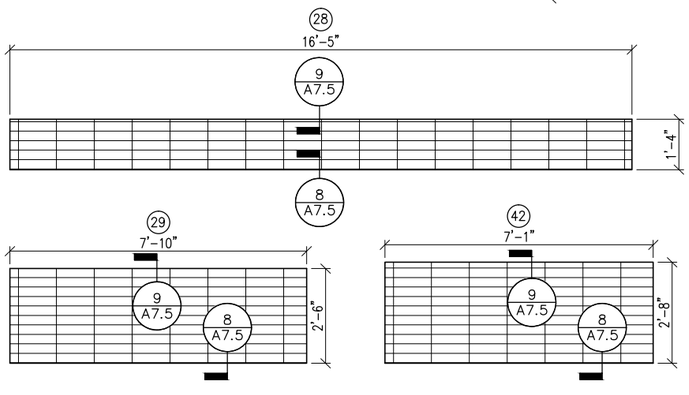

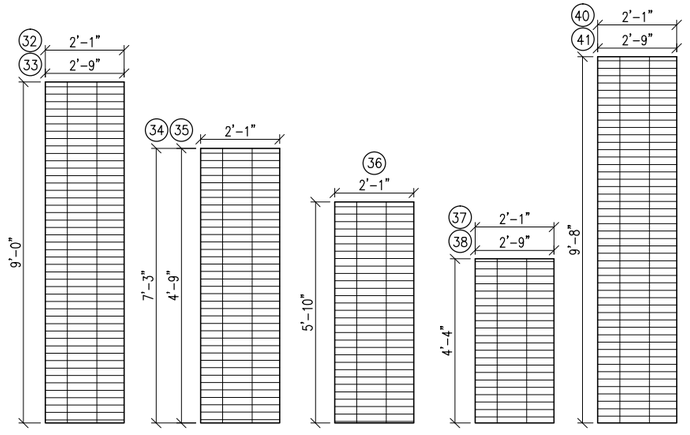

90% SUBMITTAL
NOT FOR CONSTRUCTION

FILE NAME: C:\Documents and Settings\Mackintosh LBA\local settings\temp\AcPublish_1604\ 06 A-SC0001.dwg
PLOT DATE: Sep 02, 2011 - 9:41am

MASSACHUSETTS BAY TRANSPORTATION AUTHORITY

FITCHBURG COMMUTER RAIL LINE
IMPROVEMENT PROJECT
CONTRACT NO. G67PS01

SOUTH ACTON STATION
PROTECTIVE SCREEN
SCHEDULE

ISSUE	DATE	DESCRIPTION	BY	CHKD.	APP.

HNTB
300 APOLLO DRIVE
CHELMSFORD, MA 01824
(978) 905-4000

PROJECT MANAGER Date

MASSACHUSETTS BAY TRANSPORTATION AUTHORITY
APPROVED BY:
PROJECT MANAGER Date

Lozano, Baskin, and Associates, Inc.
Architecture•Urban Design•City Planning
205 Mt. Auburn St. Watertown, MA 02472

HORIZ: N/A	DES. BY	DR. BY	CHK. BY	PLAN NO. 169533	ISSUE
VERT: N/A	MB DW	DW	MB	SHEET A-7.4	
DATE: 09/08/11					

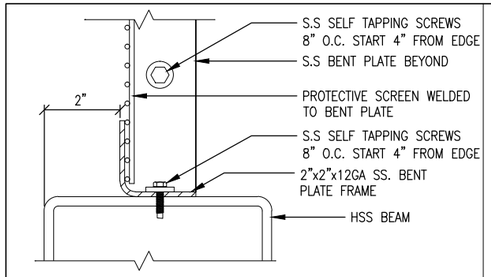

15 DETAIL: SCREEN BASE/JAMB
3" = 1'-0"

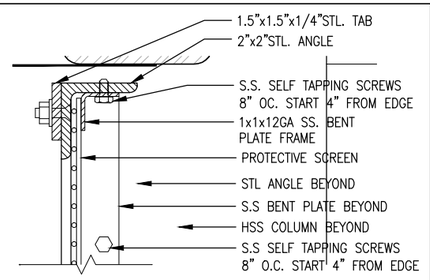

11 DETAIL: SCREEN ASSEMBLY HEAD
3" = 1'-0"

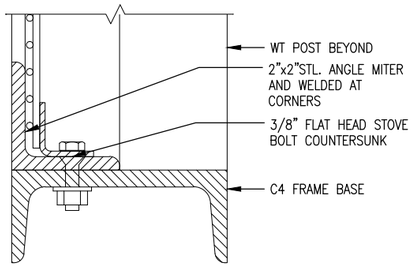

7 DETAIL: SCREEN FRAME SILL
3" = 1'-0"

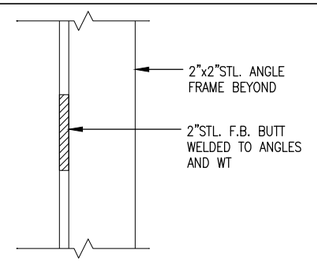

4 DETAIL: SCREEN FRAME MUNTIN
3" = 1'-0"

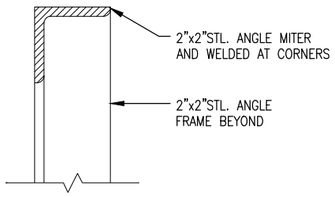

1 DETAIL: SCREEN FRAME HEAD
3" = 1'-0"

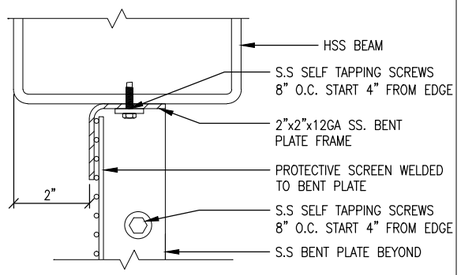

16 DETAIL: SCREEN HEAD
3" = 1'-0"

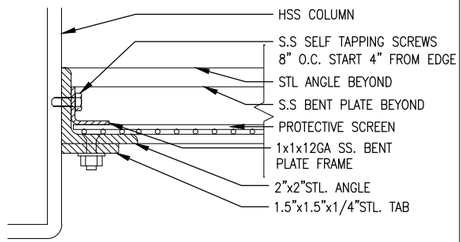

12 DETAIL: SCREEN ASSEMBLY JAMB
3" = 1'-0"

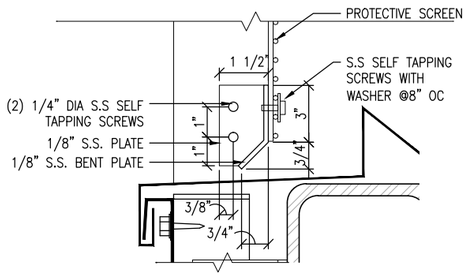

8 DETAIL: SCREEN BASE
3" = 1'-0"

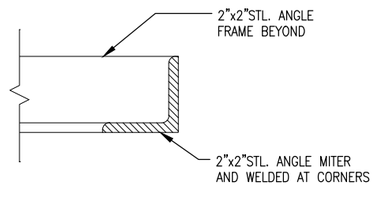

5 DETAIL: SCREEN FRAME JAMB
3" = 1'-0"

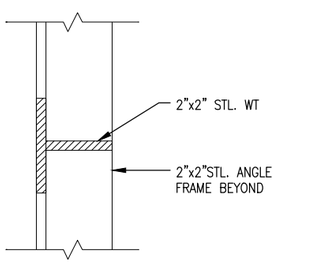

2 DETAIL: SCREEN FRAME MULLION
3" = 1'-0"

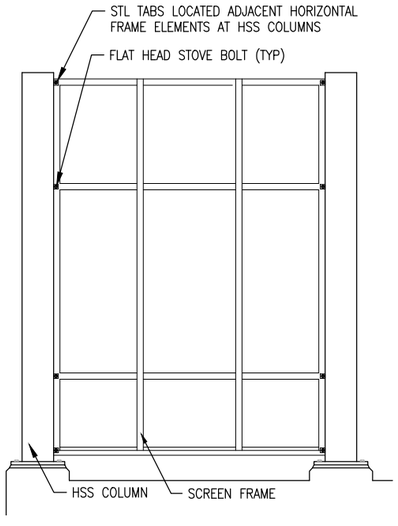

17 ELEVATION: FRAME CONNECTION
1/2" = 1'-0"

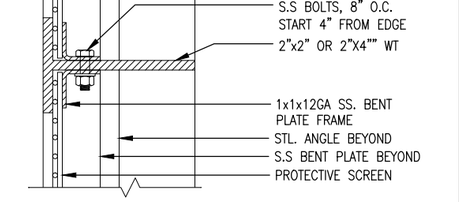

13 DETAIL: SCREEN ASSEMBLY MUNTIN
3" = 1'-0"

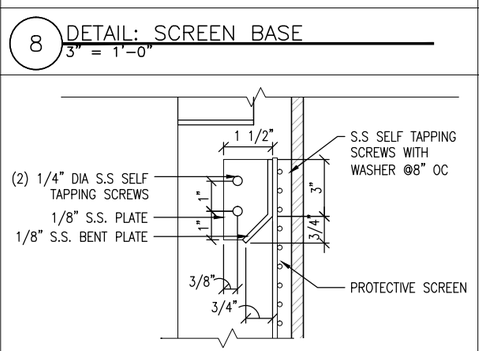

9 DETAIL: SCREEN HEAD
3" = 1'-0"

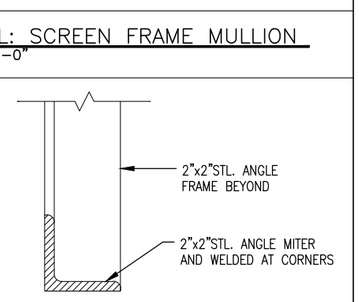

6 DETAIL: SCREEN FRAME SILL
3" = 1'-0"

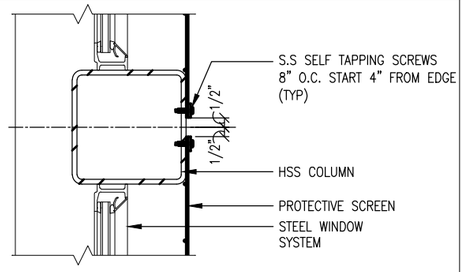

14 DETAIL: BRIDGE SCREEN JAMB
3" = 1'-0"

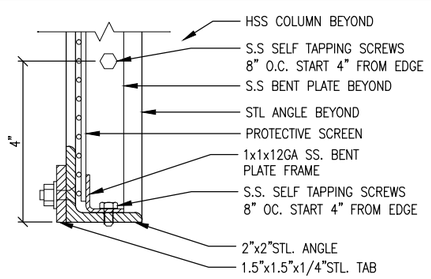

10 DETAIL: SCREEN ASSEMBLY BASE
3" = 1'-0"

90% SUBMITTAL
NOT FOR CONSTRUCTION

MASSACHUSETTS BAY TRANSPORTATION AUTHORITY
FITCHBURG COMMUTER RAIL LINE
IMPROVEMENT PROJECT
CONTRACT NO. G67PS01

SOUTH ACTON STATION
PROTECTIVE SCREEN DETAILS

ISSUE	DATE	DESCRIPTION	BY	CHKD.	APP.

HNTB
300 APOLLO DRIVE
CHELMSFORD, MA 01824
(978) 905-4000

PROJECT MANAGER Date

MASSACHUSETTS BAY TRANSPORTATION AUTHORITY
APPROVED BY:
PROJECT MANAGER Date

Lozano, Baskin, and Associates, Inc.
Architecture•Urban Design•City Planning
205 Mt. Auburn St. Watertown, MA 02472

HORIZ: N/A	DES. BY	DR. BY	CHK. BY	PLAN NO. 169533	ISSUE
VERT: N/A	MB	DW	MB		
DATE: 09/08/11	DW			SHEET A-7.5	

FILE NAME: C:\Documents and Settings\Mackintosh LBA\local settings\temp\AcPublish_1604\ 06 A-SC0001.dwg
PLOT DATE: Sep 02, 2011 - 9:45am

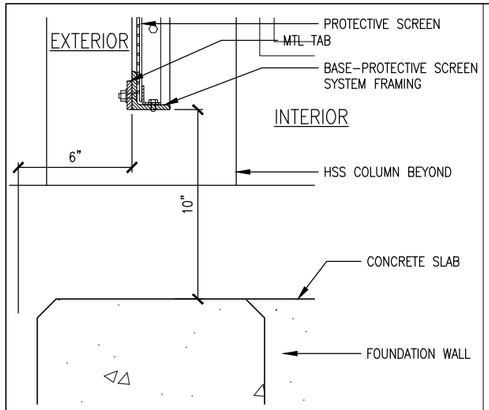

11 DETAIL: PROTECTIVE SCREEN BASE @ RAMP
3" = 1'–0"

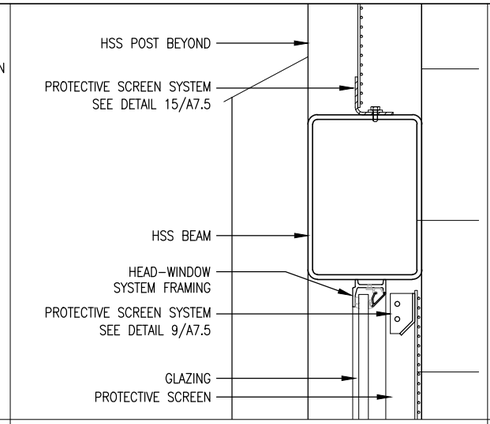

8 DETAIL: WIDOW HEAD–BRIDGE END
3" = 1'–0"

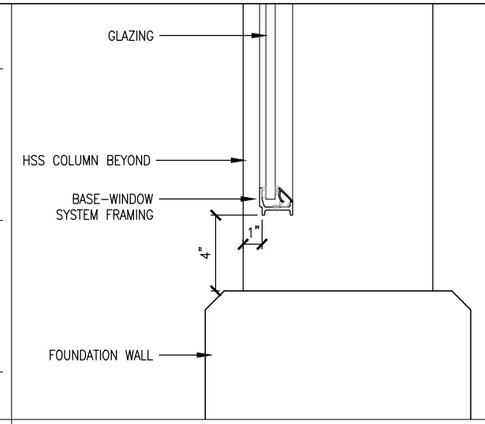

5 DETAIL: WINDOW BASE–ELEVATOR
3" = 1'–0"

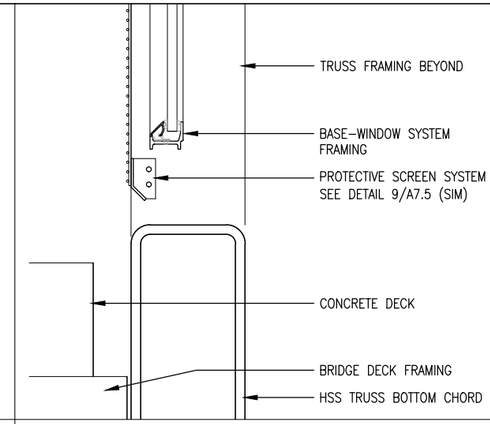

3 DETAIL: WINDOW BASE–BRIDGE
3" = 1'–0"

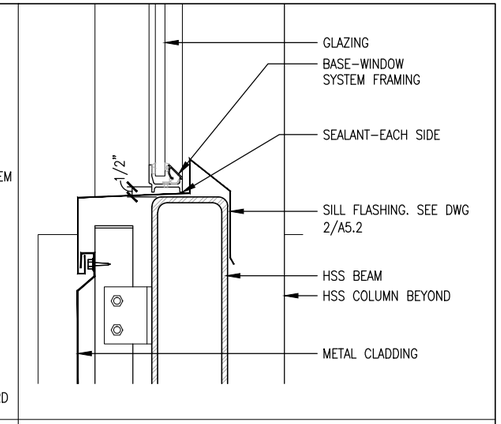

1 DETAIL: WINDOW BASE
3" = 1'–0"

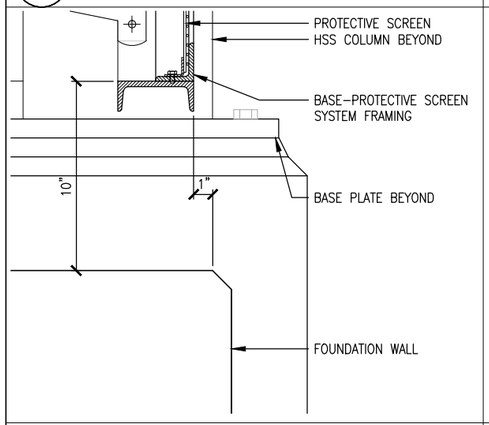

12 DETAIL: SCREEN BASE CANOPY END
3" = 1'–0"

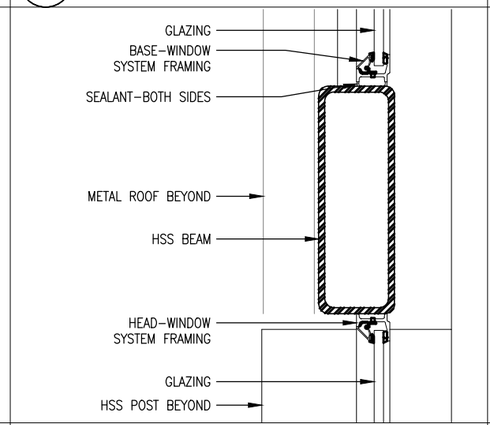

9 DETAIL: WIDOW HEAD
3" = 1'–0"

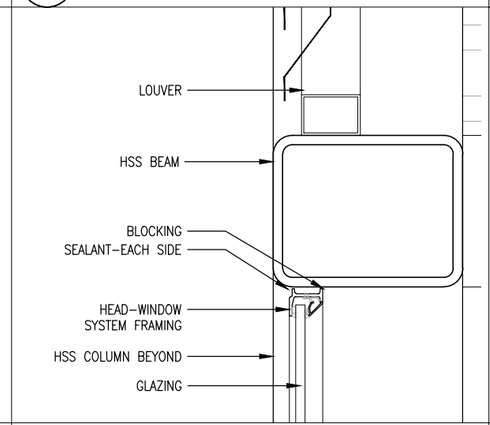

6 DETAIL: WINDOW HEAD–ELEVATOR
3" = 1'–0"

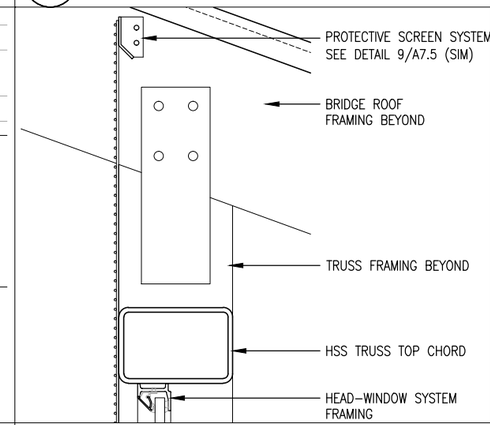

4 DETAIL: WINDOW HEAD–BRIDGE
3" = 1'–0"

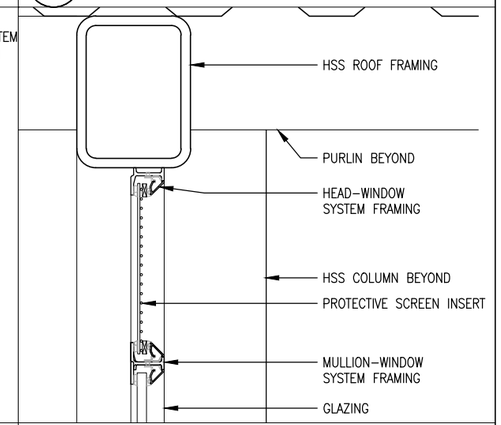

2 DETAIL: WINDOW HEAD
3" = 1'–0"

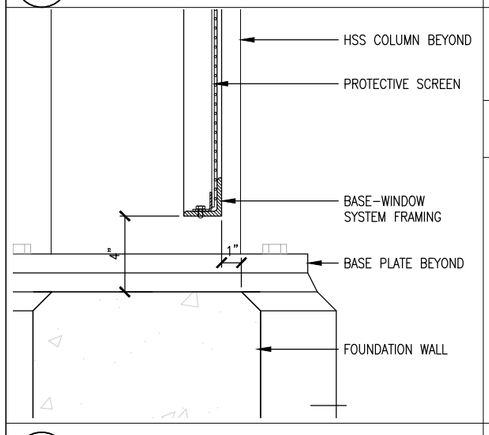

13 DETAIL: WINDOW BASE CANOPY END
3" = 1'–0"

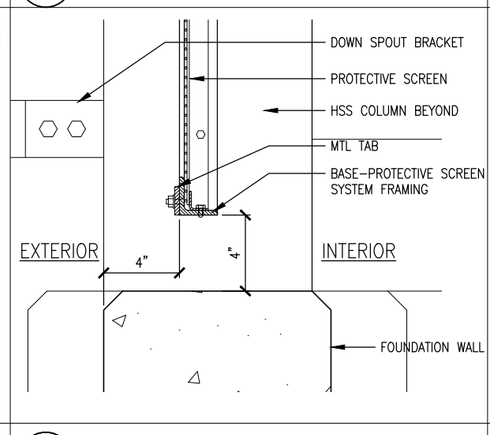

10 TYPICAL PROTECTIVE SCREEN BASE
3" = 1'–0"

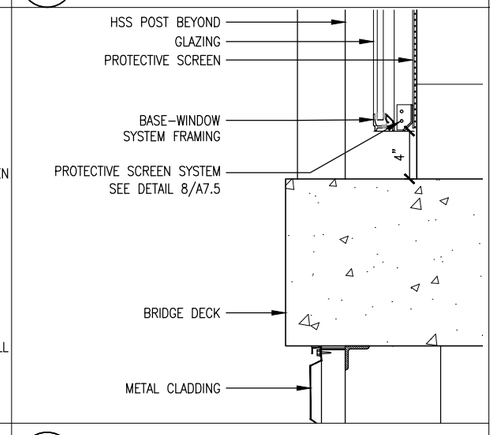

7 DETAIL: WIDOW BASE–BRIDGE END
3" = 1'–0"

90% SUBMITTAL
NOT FOR CONSTRUCTION

0 1" 2" 4"
SCALE: 3" = 1'–0"

MASSACHUSETTS BAY TRANSPORTATION AUTHORITY
FITCHBURG COMMUTER RAIL LINE
IMPROVEMENT PROJECT
CONTRACT NO. G67PS01

SOUTH ACTON STATION
DETAILS
FRAMES

ISSUE	DATE	DESCRIPTION	BY	CHKD.	APP.

HNTB 300 APOLLO DRIVE CHELMSFORD, MA 01824 (978) 905–4000
PROJECT MANAGER Date

Lozano, Baskin, and Associates, Inc.
Architecture•Urban Design•City Planning
205 Mt. Auburn St. Watertown, MA 02472

MASSACHUSETTS BAY TRANSPORTATION AUTHORITY
APPROVED BY:
PROJECT MANAGER Date

HORIZ: N/A	DES. BY	DR. BY	CHK. BY	PLAN NO. 169533	ISSUE
VERT: N/A	MB DW	DW	MB		
DATE: 09/08/11				SHEET A–7.6	

FILE NAME: C:\Documents and Settings\Mackintosh LBA\local settings\temp\AcPublish_1604\ 06 A–SC0001.dwg
PLOT DATE: Sep 02, 2011 – 9:44am

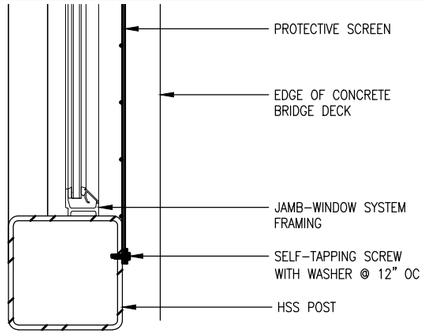

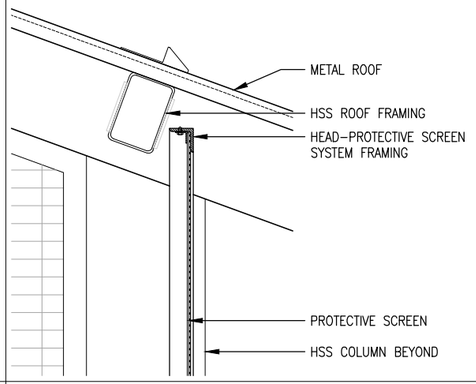

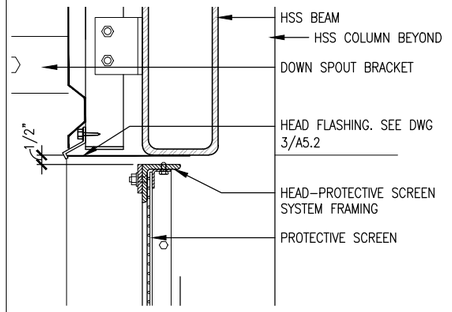

11

8

5 DETAIL: WINDOW JAMB–BRIDGE
3" = 1'–0"

3 DETAIL: SCREEN HEAD CANOPY END
3" = 1'–0"

1 DETAIL: PROTECTIVE SCREEN HEAD
3" = 1'–0"

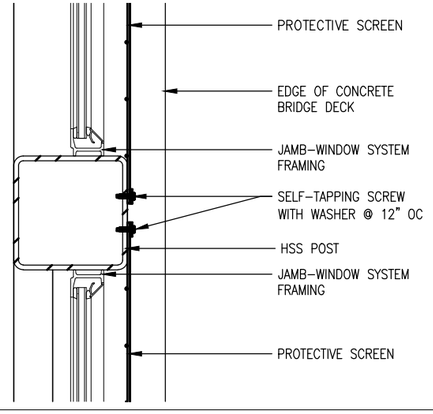

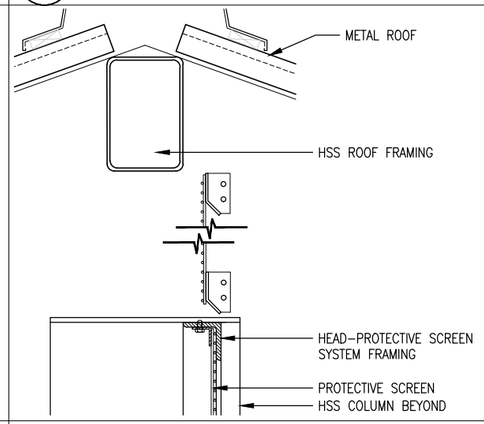

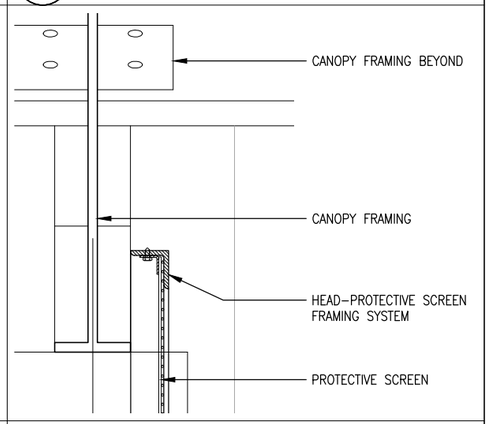

12

9

6 DETAIL: WINDOW JAMB–BRIDGE
3" = 1'–0"

4 DETAIL: PROTECTIVE SCREEN HEAD
3" = 1'–0"

2 DETAIL: SCREEN HEAD CANOPY END
3" = 1'–0"

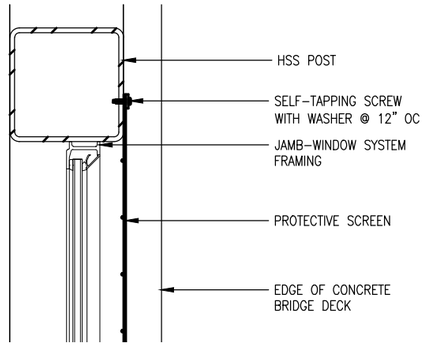

13

10

7 DETAIL: WIDOW JAMB–BRIDGE
3" = 1'–0"

90% SUBMITTAL
NOT FOR CONSTRUCTION

ISSUE	DATE	DESCRIPTION	BY	CHKD.	APP.

Lozano, Baskin, and Associates, Inc.
Architecture • Urban Design • City Planning
205 Mt. Auburn St. Watertown, MA 02472

MASSACHUSETTS BAY TRANSPORTATION AUTHORITY

FITCHBURG COMMUTER RAIL LINE
IMPROVEMENT PROJECT
CONTRACT NO. G67PS01

SOUTH ACTON STATION
DETAILS
FRAMES

HNTB
300 APOLLO DRIVE
CHELMSFORD, MA 01824
(978) 905–4000

PROJECT MANAGER Date

MASSACHUSETTS BAY TRANSPORTATION AUTHORITY
APPROVED BY:
PROJECT MANAGER Date

HORIZ: N/A	DES. BY	DR. BY	CHK. BY	PLAN NO. 169533	ISSUE
VERT: N/A	MB DW	DW	MB		
DATE: 09/08/11				SHEET A–7.7	

FILE NAME: C:\Documents and Settings\Mackintosh LBA\Local settings\temp\AcPublish_1604\ 06 A–SC0001.dwg
PLOT DATE: Sep 02, 2011 – 9:45am

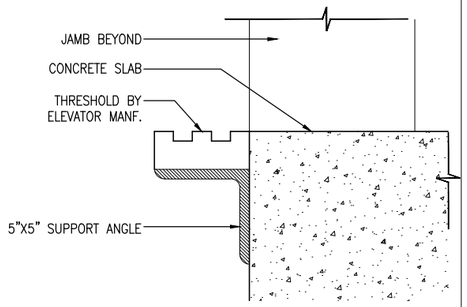

7 DETAIL: ELEVATOR THRESHOLD
3" = 1'-0"

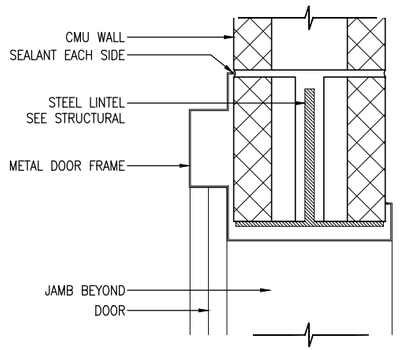

4 DETAIL: ELEVATOR HEAD
3" = 1'-0"

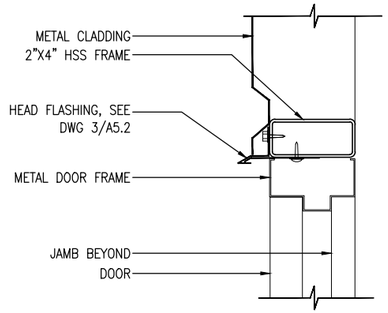

1 DETAIL: DOOR HEAD
3" = 1'-0"

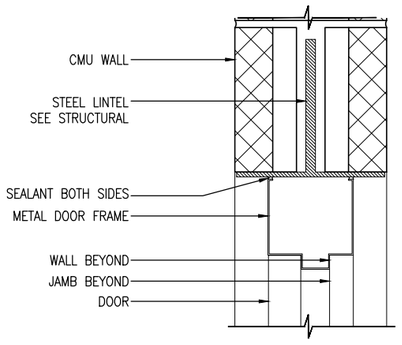

8 DETAIL: DOOR HEAD
3" = 1'-0"

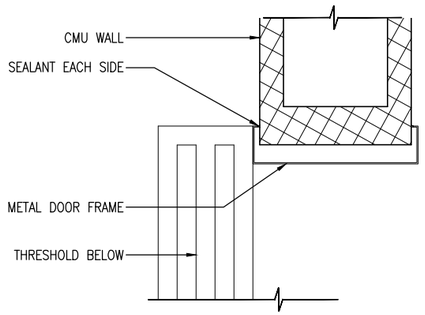

5 DETAIL: ELEVATOR JAMB
3" = 1'-0"

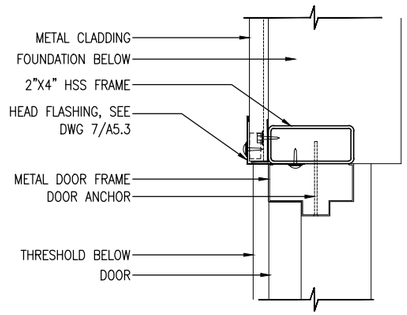

2 DETAIL: DOOR JAMB
3" = 1'-0"

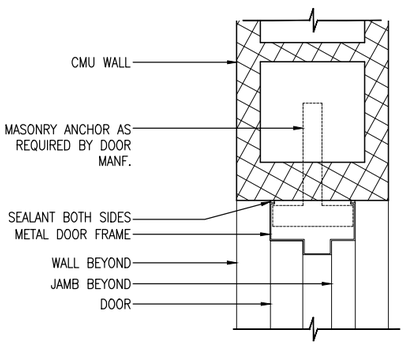

9 DETAIL: DOOR JAMB
3" = 1'-0"

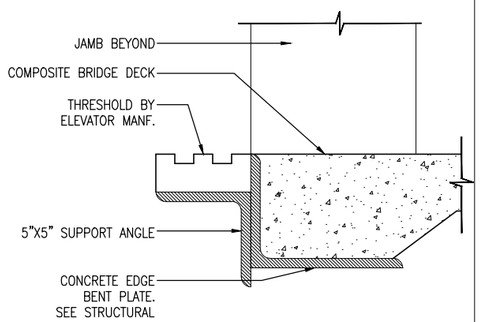

6 DETAIL: ELEVATOR THRESHOLD
3" = 1'-0"

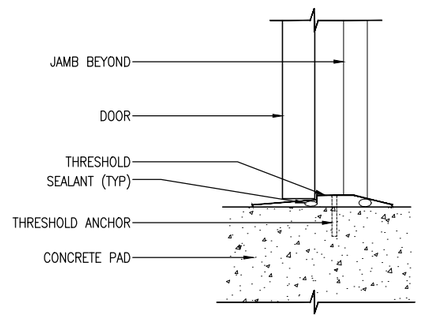

3 DETAIL: DOOR THRESHOLD
3" = 1'-0"

DOOR SCHEDULE

DOOR #	TYPE		DETAILS			REMARKS
	DOOR	FRAME	JAMB	HEAD	THRESHOLD	
1	A	2	2/A7.5	1/A7.5	3/A7.5	
2	–	–	4/A7.5	5/A7.5	7/A7.5	
3	B	1	9/A7.5	8/A7.5	–	
4	B	1	9/A7.5	8/A7.5	–	
5	B	1	9/A7.5	8/A7.5	–	
6	–	–	4/A7.5	5/A7.5	7/A7.5	
7	A	2	2/A7.5	1/A7.5	3/A7.5	
8	B	3	9/A7.5	8/A7.5	–	DOUBLE DOOR
9	–	–	4/A7.5	5/A7.5	6/A7.5	
10	–	–	4/A7.5	5/A7.5	6/A7.5	

NOTE:
1. REFER TO PLAN SHEETS A2.1–A2.4 FOR DOOR LOCATIONS EXCEPT AS NOTED OTHERWISE.

DOOR TYPES

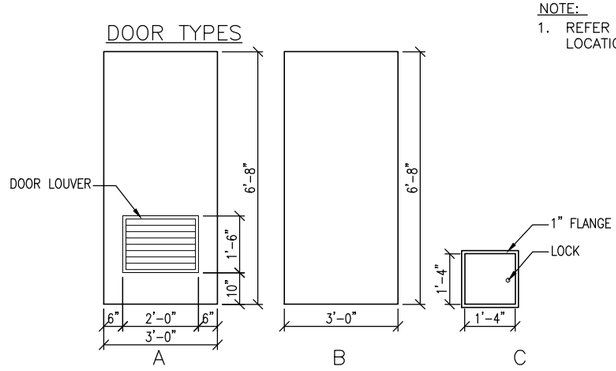

FRAME TYPES

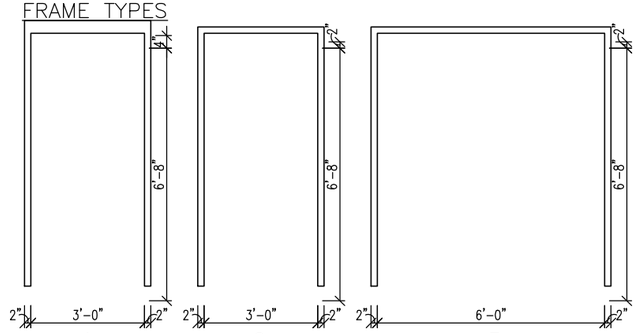

90% SUBMITTAL
NOT FOR CONSTRUCTION

MASSACHUSETTS BAY TRANSPORTATION AUTHORITY
FITCHBURG COMMUTER RAIL LINE IMPROVEMENT PROJECT
CONTRACT NO. G67PS01

SOUTH ACTON STATION
DOOR SCHEDULE
AND DETAILS

ISSUE	DATE	DESCRIPTION	BY	CHKD.	APP.

HNTB 300 APOLLO DRIVE CHELMSFORD, MA 01824 (978) 905-4000

MASSACHUSETTS BAY TRANSPORTATION AUTHORITY
APPROVED BY:
PROJECT MANAGER Date
PROJECT MANAGER Date

Lozano, Baskin, and Associates, Inc.
Architecture • Urban Design • City Planning
205 Mt. Auburn St. Watertown, MA 02472

HORIZ: N/A	DES. BY	DR. BY	CHK. BY	PLAN NO. 169533	ISSUE
VERT: N/A	MB	DW	MB		
DATE: 09/08/11	DW			SHEET A–7.8	

FILE NAME: C:\Documents and Settings\Mackintosh LBA\Local settings\temp\AcPublish_1604\ 06 A-SC0001.dwg
PLOT DATE: Sep 02, 2011 - 9:46am

EAST TO BOSTON

WEST TO FITCHBURG

TOWN OF ACTON

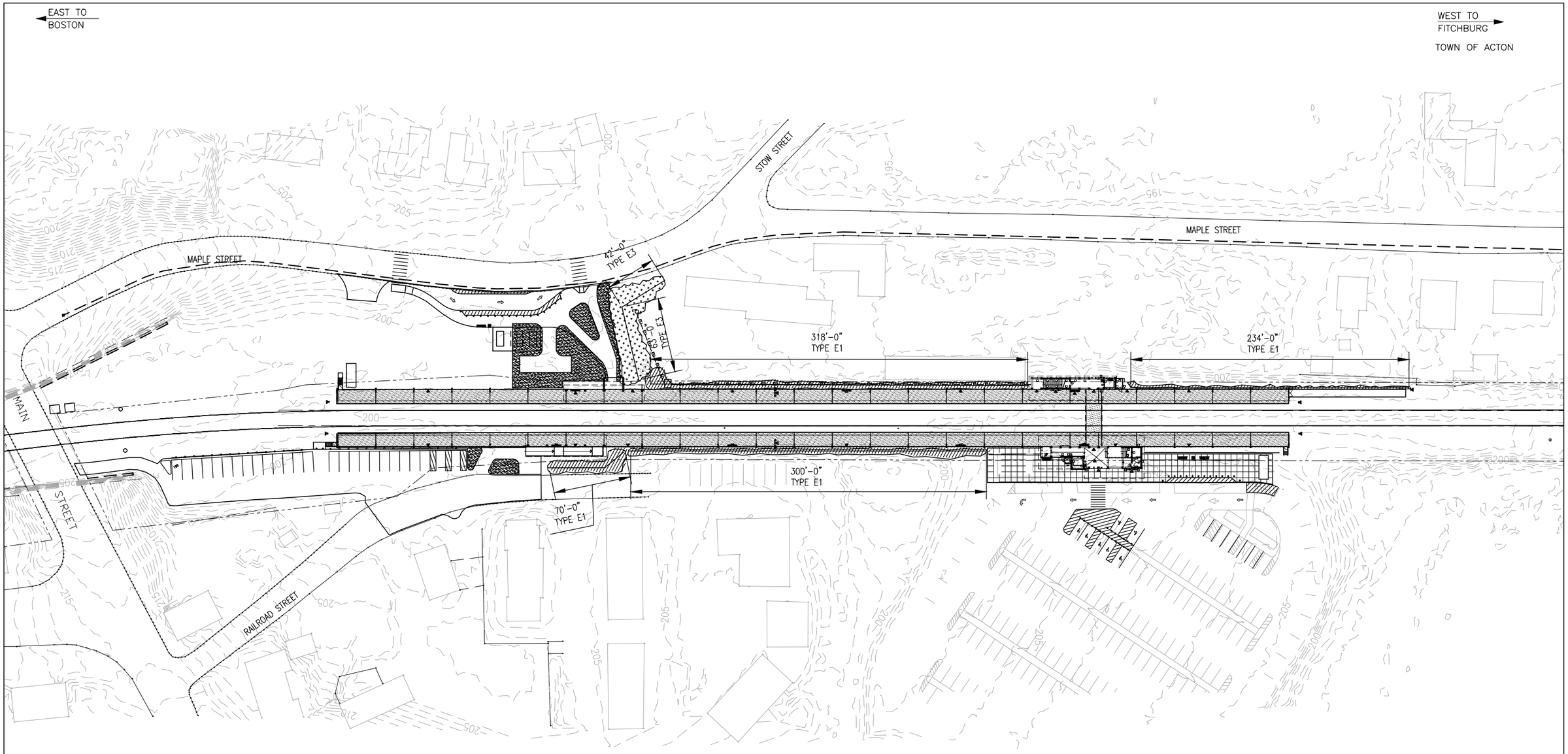

1 SITE
1:500

LEGEND:

- MODULE E1 PERIPHERAL — TYPE E1
- MODULE E2 CIRCULATION — TYPE E2
- MODULE E3 ENTRY ZONE — TYPE E3
- MODULE E4 SHRUB — TYPE E4
- LOAM AND SEED

0 250 500 1000

SCALE: 1:500

PROJECT NORTH

90% SUBMITTAL
NOT FOR CONSTRUCTION

ISSUE	DATE	DESCRIPTION	BY	CHK'D.	APP.

Lozano, Baskin, and Associates, Inc.
Architecture•Urban Design•City Planning
205 Mt. Auburn St. Watertown, MA 02472

MASSACHUSETTS BAY TRANSPORTATION AUTHORITY

FITCHBURG COMMUTER RAIL LINE
IMPROVEMENT PROJECT
CONTRACT NO. G67PS01

SOUTH ACTON STATION
LANDSCAPE PLAN

HNTB
300 APOLLO DRIVE
CHELMSFORD, MA 01824
(978) 905-4000

PROJECT MANAGER Date

MASSACHUSETTS BAY TRANSPORTATION AUTHORITY
APPROVED BY:
PROJECT MANAGER Date

	DES. BY	DR. BY	CHK. BY
HORIZ: N/A	MB	DW	MB
VERT: N/A	DW		
DATE: 09/08/11			

PLAN NO.
SHEET A-8.1
ISSUE

FILE NAME: C:\Documents and Settings\Mackintosh LBA\local settings\temp\AcPublish_1604\ 07 A-LA0001.dwg
PLOT DATE: Sep 02, 2011 - 9:46am

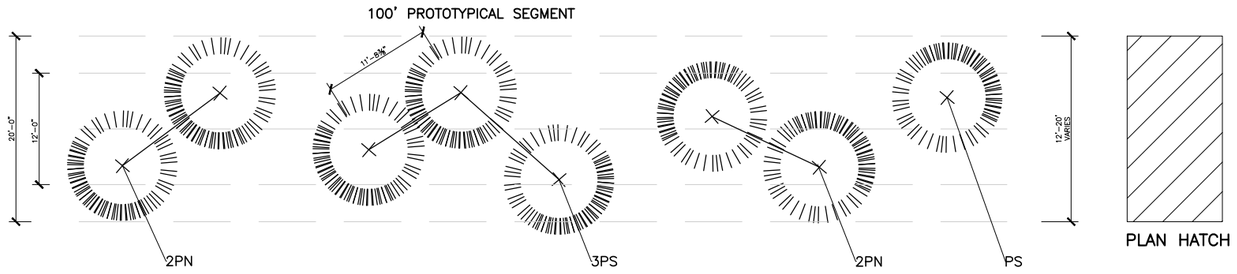

PLAN HATCH

MODULE E1:
PERIPHERAL AREA TREES (A)
NTS A–11.2

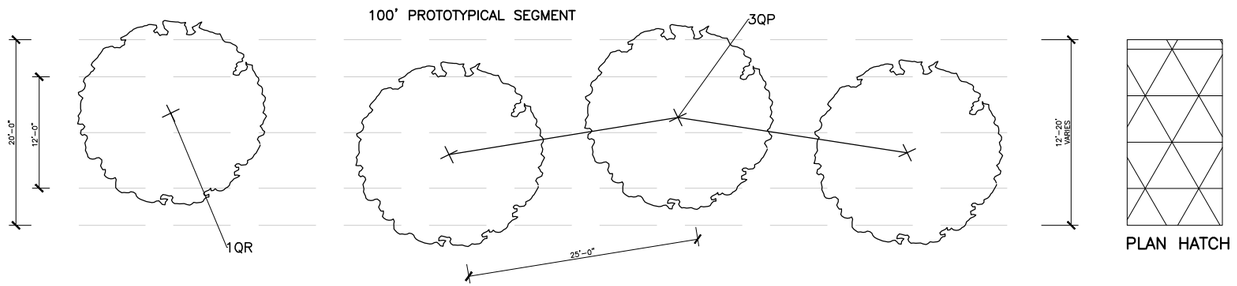

PLAN HATCH

MODULE E2:
GENERAL CIRCULATION TREES (B)
NTS A–11.2

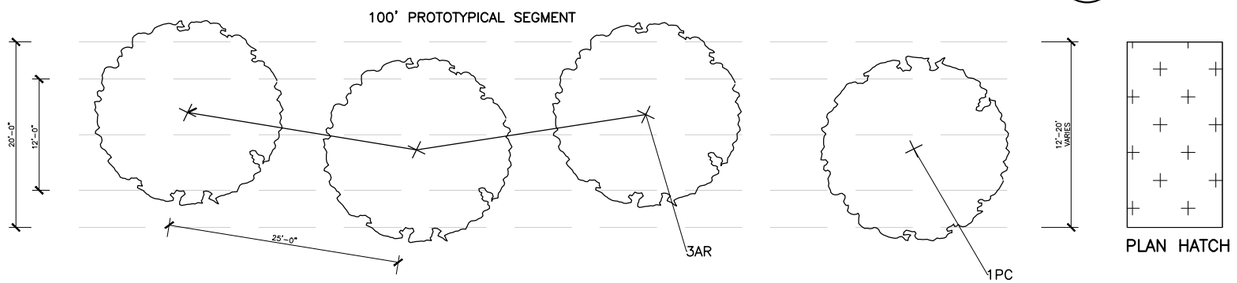

PLAN HATCH

MODULE E3:
STATION ENTRY ZONE TREES (C)
NTS A–11.2

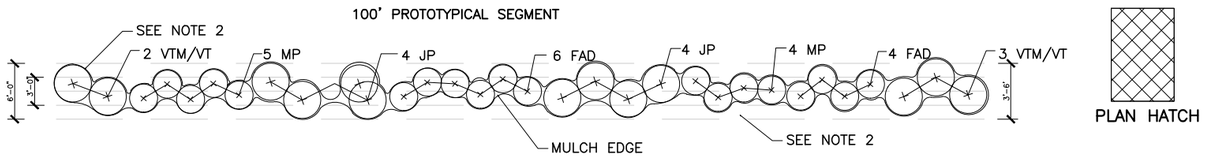

PLAN HATCH

MODULE E4:
SHRUB PLANTING (D)
NTS A–11.2

LEGEND

- PROPOSED DECIDUOUS TREE — A/B L–2
- PROPOSED EVERGREEN TREE — C/D L–2
- PROPOSED SHRUB — E/F L–2
- PROPOSED DECIDUOUS OR EVERGREEN SHRUB — E/F L–2

PLANT SCHEDULE

Trees

SYMBOL	QTY	SCIENTIFIC NAME	COMMON NAME	BASE BID SIZE	COMMENTS
AR		Acer rubrum	Red Maple	4" cal.	B&B
PC		Pyrus calleryana	Bradford Pear	4" cal.	B&B
PS		Pinus strobus	White Pine	3"–3 1/2" cal.	B&B
PN		Pinus nigra	Austrian Pine	6' ht.	B&B
TD		Taxus media densiformis	Densiform Yew	2 1/2'–3' Sprd	B&B
QP		Quercus palustris	Pin Oak	1 1/2"–2" cal.	B&B
QR		Quercus rubra	Red Oak	1 1/2"–2" cal.	B&B

PLANT SCHEDULE

Shrubs

SYMBOL	QTY	SCIENTIFIC NAME	COMMON NAME	BASE BID SIZE	SPACING	COMMENTS
FAD		Forsythia x 'Arnold Dwarf'	Arnold Dwarf Fosythia	2' ht.	3' O.C.	CG
JP		Juniperus chinensis 'Pfitzeriana'	Pfitzer Juniper	2' ht.	4' O.C.	CG
MP		Myrica pensylvanica	Northern Bayberry	2' ht.	3' O.C.	CG
VTM		Viburnum plicatum tomentosum 'Mariesi'	Doublefile Viburnum	2' ht.	4' O.C.	CG
VT		Viburnum trilobum	American Cranberrybush	2' ht.	4' O.C.	CG
VC		Vaccinium corymbosum 'Northland'	Highbush Blueberry	2' ht.	3' O.C.	CG

NOTES:
1. PROVIDE 3" OF AGED PINE BARK MULCH AROUND THE BASE OF THE TREE/SHRUB AND LOAM AND SEED DISTURBED AREAS PER MBTA STANDARD SPECIFICATIONS – SECTION 02485.
2. UNDISTURBED AREAS OUTSIDE OF THE MULCH AREA SHALL BE LEFT NATURALLY VEGETATED.
3. PROVIDE LOAM AND SEED AS INDICATED ON DRAWING AND AS REQUIRED BY MBTA STANDARD SPECIFICATIONS – SECTION 02485.
4. AREAS DISTURBED BY CONSTRUCTION SHALL BE LOAMED AND SEEDED AS REQUIRED FOR FINISHED GRADE SLOPES IN ACCORDANCE WITH MBTA STANDARD SPECIFICATIONS – SECTION 02485.
5. SEE A–11.3 FOR PLANTING DETAILS.

90% SUBMITTAL
NOT FOR CONSTRUCTION

MASSACHUSETTS BAY TRANSPORTATION AUTHORITY
FITCHBURG COMMUTER RAIL LINE
IMPROVEMENT PROJECT
CONTRACT NO. G67PS01

SOUTH ACTON STATION
LANDSCAPE MODULES

ISSUE	DATE	DESCRIPTION	BY	CHKD.	APP.

HNTB
300 APOLLO DRIVE
CHELMSFORD, MA 01824
(978) 905–4000

Lozano, Baskin, and Associates, Inc.
Architecture•Urban Design•City Planning
6 Bennett Street Cambridge, MA 02138

MASSACHUSETTS BAY TRANSPORTATION AUTHORITY
APPROVED BY:
PROJECT MANAGER Date
DIRECTOR OF OPERATIONS SUPPORT Date

HORIZ: NTS	DES. BY	DR. BY	CHK. BY	PLAN NO.	ISSUE
VERT:	XX	MB	MB		
DATE: 06/14/2011				SHEET A–8.2 OF	

FILE NAME: W:\DwgFiles\0814 Fitchburg Main Line\0814.01_So. Acton Station\7.0 Design Development\60% Submission\7.1 Dwg\ 07 A–LA0002.dwg
PLOT DATE: Sep 02, 2011 – 9:46am

NOTE:
WATERING SAUCER SHALL BE FLOODED TWICE DURING THE FIRST 24 HOURS AFTER PLANTING. DO NOT CUT LEADER. TREE WRAP SHALL NOT BE USED. TREE SHALL BE SET PLUMB.

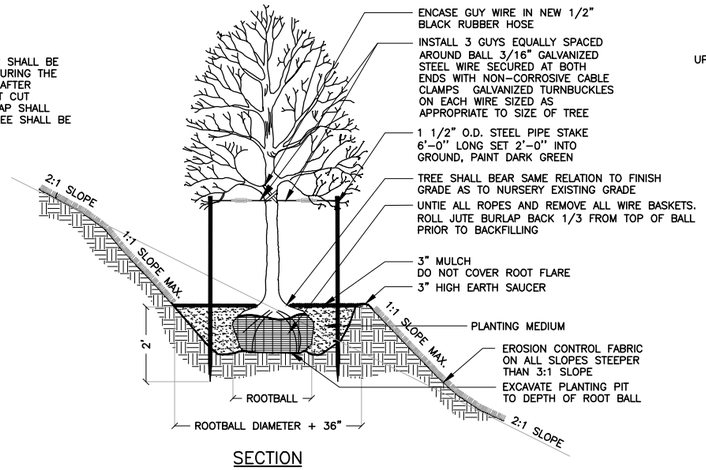

SECTION

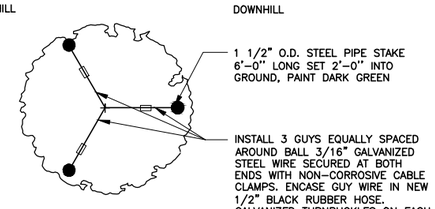

PLAN

DECIDUOUS TREE PLANTING ON A SLOPE

NTS

A
A–11.3

NOTE:
WATERING SAUCER SHALL BE FLOODED TWICE DURING THE FIRST 24 HOURS AFTER PLANTING. DO NOT CUT LEADER. TREE WRAP SHALL NOT BE USED. TREE SHALL BE SET PLUMB.

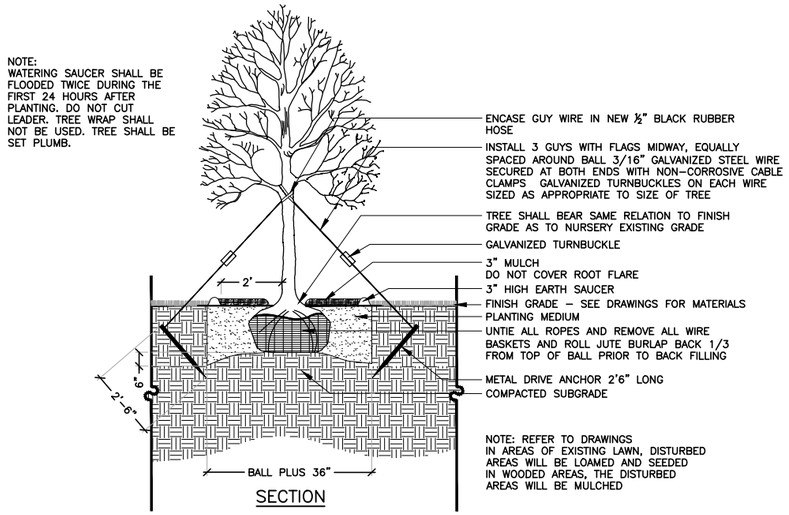

SECTION

DECIDUOUS TREE PLANTING

NTS

B
A–11.3

WATERING SAUCER SHALL BE FLOODED TWICE DURING THE FIRST 24 HOURS AFTER PLANTING
DO NOT CUT LEADER
TREE WRAP SHALL NOT BE USED
TREE SHALL BE SET PLUMB

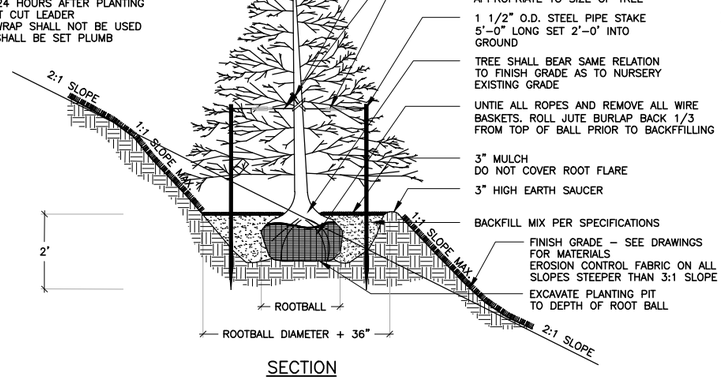

SECTION

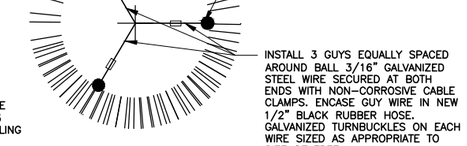

PLAN

EVERGREEN TREE PLANTING ON A SLOPE

NTS

C
A–11.3

NOTE:
WATERING SAUCER SHALL BE FLOODED TWICE DURING THE FIRST 24 HOURS AFTER PLANTING. DO NOT CUT LEADER. TREE WRAP SHALL NOT BE USED. TREE SHALL BE SET PLUMB.

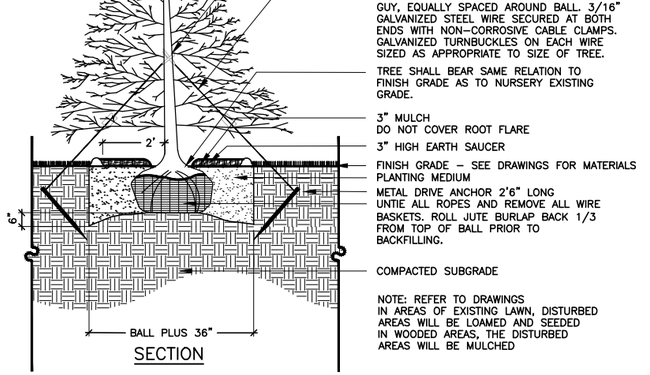

SECTION

EVERGREEN TREE PLANTING

NTS

D
A–11.3

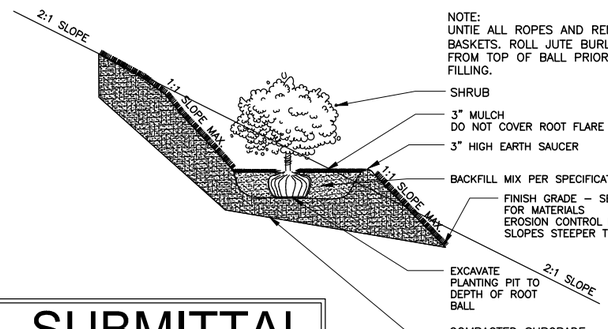

SHRUB PLANTING

NTS

F
A–11.3

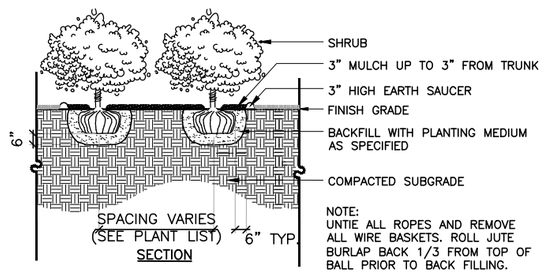

SECTION

SHRUB PLANTING

NTS

E
A–11.3

90% SUBMITTAL
NOT FOR CONSTRUCTION

MASSACHUSETTS BAY TRANSPORTATION AUTHORITY
FITCHBURG COMMUTER RAIL LINE
IMPROVEMENT PROJECT
CONTRACT NO. G67PS01

SOUTH ACTON STATION
LANDSCAPE
DETAILS

ISSUE	DATE	DESCRIPTION	BY	CHKD.	APP.

HNTB
300 APOLLO DRIVE
CHELMSFORD, MA 01824
(978) 905–4000

MASSACHUSETTS BAY TRANSPORTATION AUTHORITY
APPROVED BY:
PROJECT MANAGER Date
DIRECTOR OF OPERATIONS SUPPORT Date

Lozano, Baskin, and Associates, Inc.
Architecture•Urban Design•City Planning
6 Bennett Street Cambridge, MA 02138

HORIZ: NTS	DES. BY	DR. BY	CHK. BY	PLAN NO.	ISSUE
VERT:	XX	MB	MB		
DATE: 06/14/2011				SHEET A–8.3 OF	

FILE NAME: W:\DwgFiles\0814 Fitchburg Main Line\0814.01_So. Acton Station\7.0 Design Development\60% Submission\7.1 Dwg\ 07 A–LA0002.dwg
PLOT DATE: Sep 02, 2011 – 9:47am

GENERAL STATION STRUCTURAL NOTES:

1.0 GENERAL CONDITIONS:

1.1 THE CONTRACTOR SHALL BE RESPONSIBLE FOR FIELD VERIFICATION OF ALL DIMENSIONS, ELEVATIONS, AND GENERAL CONDITIONS WITH REGARD TO EXISTING AND PROPOSED STRUCTURES AND UTILITIES.

1.2 THE CONTRACTOR SHALL EXAMINE THE CONTRACT DOCUMENTS TO VERIFY AND COORDINATE DIMENSIONS AND LOCATIONS OF ITEMS OF ARCHITECTURAL, ELECTRICAL, MECHANICAL AND CIVIL DISCIPLINES WHICH MAY NOT BE SHOWN ON STRUCTURAL DRAWINGS. ANY DISCREPANCIES SHALL BE BROUGHT TO THE ATTENTION OF THE ENGINEER PRIOR TO COMMENCING WORK.

1.3 PLATFORM EDGES SHALL BE SET AT 4'-0" ABOVE TOP OF RAIL VERTICALLY AND 5'-7" HORIZONTALLY (FACE OF TIMBER RUBBING STRIP) FROM C OF PROPOSED TRACKS (TANGENT TRACK SELECTIONS ONLY). FOR AREAS OF CURVED TRACK SEE SHEET S-103. IF EXISTING FIELD CONDITIONS VARY FROM THOSE SHOWN ON THE PLANS THEN ANY DISCREPANCY SHOULD BE BROUGHT TO THE ATTENTION OF THE ENGINEER PRIOR TO COMMENCING WORK.

1.4 DESIGN AND CONSTRUCTION OF ALL WORK SHALL CONFORM TO THE MOST CURRENT EDITIONS OF THE FOLLOWING:

- MBTA STANDARD SPECIFICATIONS INCLUDING SPECIAL PROVISIONS
- MASSACHUSETTS STATE BUILDING CODE
- ACI-318 - BUILDING CODE REQUIREMENTS FOR STRUCTURAL CONCRETE
- ACI-530 - BUILDING CODE REQUIREMENTS FOR MASONRY STRUCTURES
- AISC STEEL CONSTRUCTION MANUAL
- PCI DESIGN HANDBOOK
- ASCE 7 - MINIMUM DESIGN LOADS FOR BUILDINGS AND OTHER STRUCTURES
- STRUCTURAL WELDING CODE AWS D1.1
- AREMA - MANUAL FOR RAILWAY ENGINEERING

IN CASE OF CONFLICT BETWEEN THE CODES, STANDARD REGULATIONS, SPECIFICATIONS, GENERAL NOTES AND/OR MANUFACTURERS' REQUIREMENTS, USE THE MOST STRINGENT PROVISIONS.

1.5 FOR ANY CONSTRUCTION CONDITION OR CONSTRUCTION LOADS WHICH EXCEED THE INDICATED DESIGN LOADS, THE CONTRACTOR SHALL ENGAGE A LICENSED STRUCTURAL ENGINEER REGISTERED IN THE COMMONWEALTH OF MASSACHUSETTS TO VERIFY STRUCTURAL CAPACITY.

1.6 FOR SIGNAGE, COMMUNICATIONS, AND LIGHTING DETAILS, REFER TO ARCHITECTURAL AND ELECTRICAL DRAWINGS.

1.7 ENGINEER'S REVIEW OF SHOP DRAWINGS IS FOR GENERAL CONFORMANCE WITH THE DESIGN CONCEPT AND DOES NOT RELIEVE THE CONTRACTOR FROM HIS RESPONSIBILITY TO COMPLY WITH THE REQUIREMENTS OF THE CONTRACT DOCUMENTS.

2.0 DESIGN REQUIREMENTS:

2.1 DEAD LOADS:
THE DESIGN IS BASED UPON THE FOLLOWING UNIT WEIGHT OF THE MATERIALS:

REGULAR WEIGHT CONCRETE	150 PCF
COMPACTED SAND AND GRAVEL AND/ OR	125 PCF
EARTH FILL BALLAST	120 PCF

2.2 GROUND SNOW LOAD OF 55 PSF BASED ON MASSACHUSETTS BUILDING CODE FOR SOUTH ACTON (TABLE 1604.11).

2.3 BASIC WIND SPEED OF 100 MPH BASED ON REQUIREMENTS OF MASSACHUSETTS BUILDING CODE FOR DESIGN OF STATION ELEMENTS (TABLE 1604.11).

2.4 STATION PLATFORMS, HEAD HOUSES, AND PEDESTRIAN BRIDGE ARE DESIGNED FOR A LIVE LOAD OF 100 PSF. STATION STAIRS ARE DESIGNED FOR A LIVE LOAD OF 100 PSF OR A CONCENTRATED LOAD OF 300 LBS. OVER FOUR SQUARE INCHES OF THREAD, WHICHEVER PRODUCES GREATER STRESSES.

2.5 EARTHQUAKE DESIGN: (TABLE 1614.11)
EARTHQUAKE SPECTRAL RESPONSE ACCELERATION AT ONE SECOND, S_1 = 0.071
EARTHQUAKE SPECTRAL RESPONSE ACCELERATION AT SHORT PERIODS, S_S = 0.29

2.6 METAL DECK AND ROOF MEMBERS SHALL BE DESIGNED USING A SNOW LOAD DEFLECTION LIMIT OF L/240. FLOOR MEMBERS SHALL BE DESIGNED USING A LIVE LOAD DEFLECTION LIMIT OF L/360.

90% SUBMITTAL
NOT FOR CONSTRUCTION

3.0 SITEWORK / FOUNDATION:

3.1 CONTRACTOR SHALL PERFORM A PRE-CONSTRUCTION SURVEY OF THE ADJACENT TRACK AND STATION STRUCTURES PRIOR TO MINIPILE INSTALLATION.

3.2 DRILLED MINIPILES SHALL BE INSTALLED AS SHOWN ON THE PLANS AND IN ACCORDANCE WITH THE SPECIFICATIONS, THE MASSACHUSETTS STATE BUILDING CODE, AND ALL OTHER APPLICABLE LOCAL, STATE AND FEDERAL CODES AND REQUIREMENTS.

3.3 THE CONTRACTOR SHALL PERFORM ADDITIONAL SUBSURFACE INVESTIGATIONS CONSIDERED NECESSARY TO COMPLETE ALL FOUNDATION WORK. SEE GEOTECHNICAL SHEETS FOR EXISTING BORING LOGS.

3.4 THE ENGINEER SHALL INSPECT THE PROPOSED BOTTOM OF FOOTING ELEVATION AND WHERE UNSUITABLE MATERIALS ARE PRESENT SHALL DIRECT THE CONTRACTOR TO OVER EXCAVATE IN ORDER TO EXPOSE SUITABLE BEARING MATERIAL. CONTRACTOR SHALL BACKFILL TO PROPOSED BOTTOM OF FOOTING WITH GRAVEL BORROW.

4.0 CAST-IN-PLACE CONCRETE:

4.1 CONCRETE CLASS: HIGH PERFORMANCE 4000 PSI AT 28 DAYS WITH 3/4" AGGREGATE.

4.2 ALL REINFORCING STEEL TO BE ASTM A615 GRADE 60 EPOXY COATED.

4.3 MINIMUM CLEAR CONCRETE PROTECTION FOR REINFORCING UNLESS OTHERWISE NOTED:

CONCRETE CAST AGAINST EARTH:	3"
CONCRETE BACKFILLED WITH EARTH:	2"
CONCRETE EXPOSED TO WEATHER:	2"

4.4 REINFORCING STEEL SPLICE AND EMBEDMENT LENGTHS, UNLESS OTHERWISE INDICATED:

	MIN. EMBEDMENT LENGTH, IN.		MIN. LAP SPLICE, IN.	
BAR SIZE	TOP BARS	OTHER BARS	TOP BARS	OTHER BARS
4	25	22	32	28
5	31	27	40	35
6	37	33	48	42
7	43	38	56	49
8	49	43	63	56
9	55	49	71	63
10	66	58	86	76
11	81	72	105	93

4.5 CONCRETE WORK SHALL BE COORDINATED WITH ALL UTILITIES, STRUCTURAL STEEL AND ELECTRICAL WORK. THE CONTRACTOR SHALL VERIFY INSTALLATION AND LOCATIONS OF ALL INSERTS, ANCHOR BOLTS, DOWELS, BLOCKOUTS, SLEEVES, AND EMBEDDED CONDUIT PRIOR TO CONCRETE PLACEMENT.

4.6 PROVIDE 3/4" x 3/4" CHAMFER ON ALL EXPOSED VERTICAL AND HORIZONTAL CORNERS, UNLESS OTHERWISE NOTED.

4.7 WELDED WIRE REINFORCEMENT SHALL BE GRADE 60 AND CONFORM TO ASTM A 185 ("STANDARD SPECIFICATION FOR STEEL WELDED WIRE REINFORCEMENT, PLAIN, FOR CONCRETE").

5.0 PRECAST CONCRETE PLATFORMS:

5.1 CONCRETE SHALL BE SILICA FUME MODIFIED WITH 5000 PSI AT 28 DAYS WITH 3/4" MAX. AGGREGATE.

5.2 ALL REINFORCING STEEL TO BE ASTM A615 GRADE 60 EPOXY COATED.

5.3 PROVIDE 1 1/2" MINIMUM CLEAR CONCRETE PROTECTION FOR REINFORCING UNLESS OTHERWISE NOTED.

5.4 AFTER INSTALLATION, JOINTS BETWEEN PANELS SHALL BE FILLED WITH SEALANT AND POLYURETHANE FOAM.

5.5 PLATFORM GEOMETRY TOLERANCES:

THE MAXIMUM DEVIATION BETWEEN LONGITUDINAL TOP EDGES OF ADJACENT PLATFORM PANELS MEASURED FROM THE WORKING POINT LINE SHALL NOT BE MORE THAN 1/8" MAXIMUM IN ANY DIRECTION.

ADJACENT TOP SURFACE EDGES OF THE PLATFORM PANELS ARE TO BE BUILT FLUSH, THE MAXIMUM ALLOWABLE VERTICAL DIFFERENCE IN ELEVATION BETWEEN THE TOP EDGE SURFACES OF ADJACENT PLATFORM PANELS SHALL NOT EXCEED 1/8".

ADJACENT PLATFORM PANEL EDGES FACING THE TRACK ARE TO BE BUILT FLUSH, MAXIMUM ALLOWABLE HORIZONTAL DIFFERENCE BETWEEN THE FACES OF ANY TWO ADJACENT PLATFORM PANELS SHALL NOT EXCEED 1/8".

6.0 STRUCTURAL STEEL:

6.1 STRUCTURAL STEEL MATERIAL AND WELDING REQUIREMENTS:

A. W SHAPES	ASTM A992, GRADE 50
CHANNELS AND ANGLES	ASTM A572, GRADE 50
PLATES AND BARS	ASTM A572, GRADE 50
ANCHOR BOLTS AND RODS	ASTM F1554
HIGH STRENGTH BOLTS	ASTM A325
NUTS	ASTM A563
WASHERS	ASTM F436
STRUCTURAL TUBES (SQUARE OR RECTANGULAR HSS)	ASTM A500, GRADE B, Fy=46 KSI
B. WELDING	AWS D1.1, E-70XX ELECTRODES.

6.2 ALL STRUCTURAL STEEL SHALL BE ARCHITECTURAL EXPOSED STRUCTURAL STEEL (AESS) AS DEFINED BY AISC, STEEL CONSTRUCTION MANUAL, LATEST EDITION.

6.3 SHOP CONNECTIONS SHALL BE WELDED, UNLESS OTHERWISE NOTED.

6.4 FIELD CONNECTIONS SHALL BE BOLTED USING MINIMUM 5/8" DIAMETER BOLTS, UNLESS NOTED OTHERWISE.

6.5 ALL STRUCTURAL STEEL SHALL BE HOT DIP GALVANIZED THEN PAINTED UNLESS OTHERWISE NOTED. GALVANIZING SHALL BE PERFORMED AFTER COMPLETION OF SHOP FABRICATION.

6.6 NO FIELD WELDING OF RAILINGS, CANOPY OR OTHER MISCELLANEOUS METALS SHALL BE PERMITTED EXCEPT AT STEEL GUTTER CHANNEL SPLICES (SEE STEEL DETAIL SHEETS).

6.7 ALL SHOP AND FIELD CONNECTIONS SHALL DEVELOP THE FULL STRENGTH OF THE MEMBERS TO BE CONNECTED UNLESS SPECIFICALLY SHOWN OTHERWISE ON THE DRAWINGS. ALL WELDING SHALL BE PERFORMED BY CERTIFIED WELDERS APPROVED BY THE STATE OF MASSACHUSETTS AND SHALL CONFORM TO AWS D1.1.

6.8 ALL BOLTED CONNECTIONS SHALL CONFORM TO AISC SPECIFICATION FOR STRUCTURAL JOINTS USING ASTM A325 OR A490 BOLTS, 2004 EDITION. BOLTS SHALL BE INSTALLED USING THE "SNUG TIGHT" METHOD AS PRESCRIBED IN SECTION 8 OF THE SPECIFICATION FOR BEARING TYPE CONNECTIONS.

7.0 METAL DECK:

7.1 STEEL ROOF DECK SHALL BE GALVANIZED IN ACCORDANCE WITH ASTM A653.

7.2 ROOF DECK FOR PEDESTRIAN BRIDGE AND RAMPS SHALL BE 18 GAGE, 1 1/2" DEEP WIDE RIB (TYPE WR) METAL DECK WITH A MINIMUM ADJUSTED SECTION MODULUS OF 0.318 IN PER FOOT. ROOF DECK PANELS SHALL BE FORMED FROM FLAT ROLLED CARBON STEEL SHEETS OF STRUCTURAL QUALITY WITH A MINIMUM YIELD POINT OF 33,000 PSI. INTERLOCKING OR OVERLAPPING SIDE LAP REQUIRED.

7.3 RIDGE AND VALLEY PLATES, CANT STRIPS, AND OTHER METAL ROOF ELEMENTS, WHICH MUST BE ATTACHED DIRECTLY TO THE STEEL PLATES IN ORDER TO PROVIDE A FINISHED SURFACE FOR THE APPLICATION OF ROOFING, SHALL BE FURNISHED BY THE ROOF DECK MANUFACTURER.

8.0 COATING:

8.1 ALL STRUCTURAL STEEL, CONNECTIONS, BOLTS, ANCHOR BOLTS AND HARDWARE SHALL BE HOT DIP GALVANIZED UNLESS OTHERWISE NOTED.

8.2 DO NOT COAT:
A. FAYING SURFACES OF CONNECTIONS USING A325 BOLTS
B. SURFACES TO BE WELDED

8.3 SEE ARCHITECTURAL DRAWINGS AND SPECIFICATION FOR OTHER COATING REQUIREMENTS.

8.4 ALL EXPOSED STRUCTURAL STEEL SHALL BE PAINTED BLACK. COMPLY WITH THE REQUIREMENTS OF SPECIFICATION SECTION 09910-SHOP PAINTING OF HOT DIPPED GALVANIZED STEEL.

MASSACHUSETTS BAY TRANSPORTATION AUTHORITY
FITCHBURG COMMUTER RAIL LINE
IMPROVEMENT PROJECT
CONTRACT NO. G67CN01

SOUTH ACTON STATION
GENERAL STRUCTURAL NOTES
SHEET 1

ISSUE	DATE	DESCRIPTION	BY	CHKD.	APP.

HNTB 300 APOLLO DRIVE, CHELMSFORD, MA 01824 (978) 905-4000
PROJECT MANAGER Date

MASSACHUSETTS BAY TRANSPORTATION AUTHORITY
APPROVED BY:
PROJECT MANAGER Date

JACOBS 343 CONGRESS STREET BOSTON, MA 02110 (617) 242-9222

HORIZ: N/A	DES. BY	DR. BY	CHK. BY	PLAN NO.	ISSUE
VERT: N/A	JAG/DJM	JAG/DJM	MWT		
DATE: 9/8/11				SHEET S-100	

FILE NAME: P:\MBTA\2009\E2X37800\CAD\700CADD\702STATIONS\South Acton\Structural\90% Submission\ 100-101_Struc_Notes.dwg
PLOT DATE: Sep 06, 2011 - 10:39am

9.0 MASONRY:

9.1 CONCRETE BLOCK SHALL CONFORM TO ASTM C90 FOR GRADE N UNITS (NORMAL WEIGHT) AND HAVE A MINIMUM UNIT COMPRESSIVE STRENGTH OF 1,900 P.S.I.

9.2 MORTAR SHALL BE 1 PART PORTLAND CEMENT (ASTM C150), 1/2 PART LIME PUTTY (HYDRATED LIME (ASTM C141) OR QUICK LIME (ASTM C51) AND 4 1/2 PARTS SAND (ASTM C144) BY VOLUME. COLOR AS TO BE SELECTED BY THE ENGINEER FROM MANUFACTURER'S STANDARD PRODUCTS.

9.3 GROUT FOR REINFORCED CONCRETE BLOCK MASONRY SHALL CONFORM TO ASTM C476 (FINE GROUT) AND SHALL HAVE A MINIMUM COMPRESSIVE STRENGTH OF 2,500 P.S.I. AFTER 28 DAYS.

9.4 REINFORCING STEEL SHALL CONFORM TO ASTM A615, GRADE 60.

9.5 PROVIDE NON-METALLIC POSITIONERS THAT PREVENT DISPLACEMENT OF REINFORCING DURING CONSTRUCTION.

9.6 HORIZONTAL JOINT REINFORCEMENT: FACTORY-FABRICATED, TRUSS TYPE W9 GA. OR HEAVIER WIRE CONFORMING TO ASTM A82.

9.7 GROUT SHALL BE PLACED IN MAXIMUM LIFT HEIGHTS OF 4'-0".

9.8 CONTRACTOR SHALL NOT OVERLAY MASONRY IN FREEZING WEATHER UNLESS SUITABLE MEANS ARE PROVIDED TO HEAT MATERIALS. PROTECT WORK FROM COLD AND FROST TO ENSURE THAT MORTAR WILL SET TO STRENGTH WITHOUT FREEZING. NO CHLORIDE ANTIFREEZE INGREDIENT SHALL BE USED.

10.0 PRECAST CONCRETE STAIR PANELS:

10.1 PRECAST CONCRETE STAIR PANELS SHALL BE THE DESIGN RESPONSIBILITY OF THE CONTRACTOR. PANELS SHALL BE DESIGNED FOR BOTH DEAD AND LIVE LOADS ACTING CONCURRENTLY ON THE SLAB. DEAD LOAD SHALL CONSIST OF THE CONCRETE SELF-WEIGHT PLUS 20 PSF FOR RAILINGS AND MISCELLANEOUS ITEMS. LIVE LOAD SHALL BE 100 PSF, OR 300 POUNDS ON AN AREA OF 4 SQUARE INCHES, WHICHEVER PRODUCES THE GREATEST LOAD EFFECT.

10.2 CONCRETE CLASS: HP 5000 PSI AT 28 DAYS WITH $\frac{3}{4}$" AGGREGATE

10.3 CONTRACTOR SHALL SUBMIT SHOP DRAWINGS AND CALCULATIONS FOR PRECAST CONCRETE STAIR PANELS. DRAWINGS SHALL INCLUDE ATTACHMENT DETAILS TO STEEL FRAMING AND MASONRY WALLS. SHOP DRAWINGS AND CALCULATIONS SHALL BE SUBMITTED ACCORDING TO THE REQUIREMENTS OUTLINED IN THE SPECIFICATIONS AND BE STAMPED BY A PROFESSIONAL ENGINEER REGISTERED IN THE STATE OF MASSACHUSETTS.

10.4 STAIR CONNECTIONS SHALL NOT IMPOSE ECCENTRIC OR TORSIONAL LOADING ON THE STEEL FRAMING AND MASONRY WALLS.

90% SUBMITTAL
NOT FOR CONSTRUCTION

FILE NAME: P:\MBTA\2008\E2X37800\CAD\700CADD\702STATIONS\South Acton\Structural\90% Submission\ 100-101_Struc_Notes.dwg
PLOT DATE: Sep 06, 2011 - 10:39am

ISSUE	DATE	DESCRIPTION	BY	CHKD.	APP.

JACOBS
343 CONGRESS STREET
BOSTON, MA 02110
(617) 242-9222

MASSACHUSETTS BAY TRANSPORTATION AUTHORITY

FITCHBURG COMMUTER RAIL LINE
IMPROVEMENT PROJECT
CONTRACT NO. G67CN01

SOUTH ACTON STATION
GENERAL STRUCTURAL NOTES
SHEET 2

HNTB
300 APOLLO DRIVE
CHELMSFORD, MA 01824
(978) 905-4000

PROJECT MANAGER Date

MASSACHUSETTS BAY TRANSPORTATION AUTHORITY
APPROVED BY:
PROJECT MANAGER Date

HORIZ: N/A	DES. BY	DR. BY	CHK. BY	PLAN NO.	ISSUE
VERT: N/A	JAG/DJM	JAG/DJM	MWT		
DATE: 9/8/11				SHEET S-101	

EAST TO BOSTON

WEST TO FITCHBURG

TOWN OF SOUTH ACTON

N

STOW STREET

MAPLE STREET

MAPLE STREET

PROPOSED INBOUND PLATFORM DROP-OFF AREA

PROPOSED INBOUND PLATFORM ACCESS STRUCTURE FROM MAPLE STREET

℄ INBOUND TRACK 2 AND CONSTRUCTION B

PROPOSED INBOUND HEAD HOUSE

PROPOSED EGRESS STAIRS

PROPOSED INBOUND PLATFORM

PROPOSED TRACKSIDE UNDERDRAINS

PROPOSED HALF CANOPY

EXISTING UNDERGROUND UTILITY

PROPOSED HALF CANOPIES

PROPOSED PEDESTRIAN OVERPASS

PROPOSED EGRESS RAMP

1329+00 1330+00 1331+00 1332+00 1333+00 1334+00 1335+00 1336+00 1337+00 1338+00 1339+00 1340+00

EXISTING PARKING AREA

PROPOSED EGRESS STAIRS

EXISTING UNDERGROUND UTILITIES

PROPOSED FULL CANOPY

PROPOSED OUTBOUND PLATFORM ACCESS RAMP FROM RAILROAD STREET

℄ OUTBOUND TRACK 1

PROPOSED OUTBOUND PLATFORM

PROPOSED EGRESS STAIRS

PROPOSED OUTBOUND HEAD HOUSE

EXISTING INBOUND/OUTBOUND PLATFORM DROP-OFF AREA

EXISTING PARKING AREA

MAIN STREET

RAILROAD STREET

PLAN

SCALE: 1″ = 40′-0″

NOTES:

1. FOR GENERAL NOTES, SEE SHEET S-100.

90% SUBMITTAL

NOT FOR CONSTRUCTION

HORIZ. 40 0 40 80

(SCALE IN FEET)

ISSUE	DATE	DESCRIPTION	BY	CHKD.	APP.

JACOBS 343 CONGRESS STREET BOSTON, MA 02110 (617) 242-9222

HNTB 300 APOLLO DRIVE CHELMSFORD, MA 01824 (978) 905-4000

PROJECT MANAGER Date

MASSACHUSETTS BAY TRANSPORTATION AUTHORITY

APPROVED BY:

PROJECT MANAGER Date

HORIZ: 1″ = 40′	DES. BY	DR. BY	CHK. BY
VERT: N/A	JAG	JAG	MWT
DATE: 9/8/11			

PLAN NO.

SHEET S-102

ISSUE

MASSACHUSETTS BAY TRANSPORTATION AUTHORITY

FITCHBURG COMMUTER RAIL LINE IMPROVEMENT PROJECT CONTRACT NO. G67CN01

SOUTH ACTON STATION KEY PLAN

FILE NAME: P:\MBTA\2008\E2X37800\CAD\700CADD\702STATIONS\South Acton\Structural\90% Submission\102_Key_Plan.dwg
PLOT DATE: Sep 06, 2011 - 10:39am

EAST TO BOSTON

WEST TO FITCHBURG

TOWN OF SOUTH ACTON

NOTES:

1. FOR GENERAL STRUCTURAL NOTES, SEE SHEETS S-100 AND S-101.
2. FOR PLATFORM LAYOUT PLANS, SEE SHEETS S-106 THROUGH S-108.
3. FOR MINIPILE AND PIER CAP DETAILS, SEE SHEETS S-109 THROUGH S-111.
4. FOR PRECAST PANEL DETAILS, SEE SHEETS S-112 THROUGH S-115.
5. FOR EXISTING AND PROPOSED SITE UTILITIES SEE UTILITY, CIVIL, AND ELECTRICAL SHEETS.

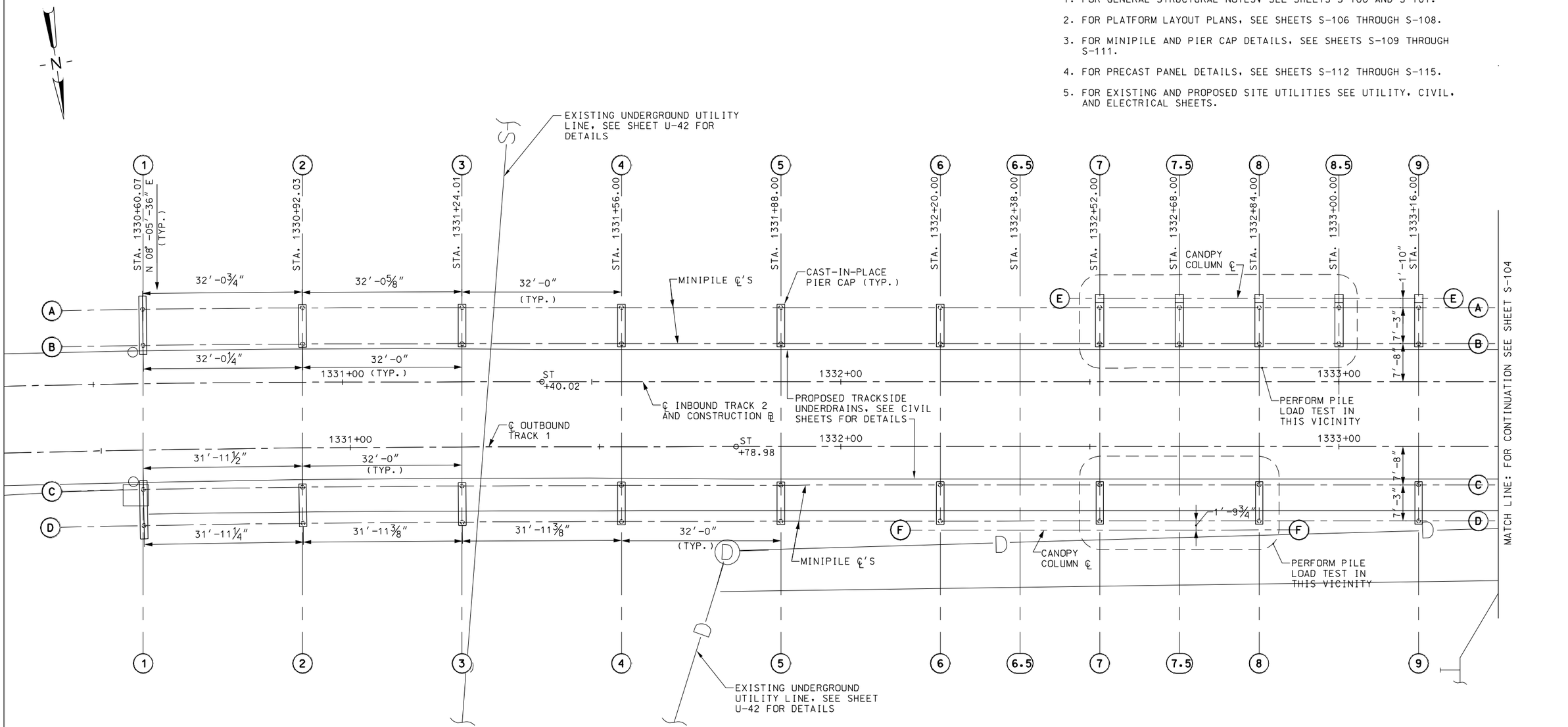

FOUNDATION PLAN

MINIPILE LOCATION TABLE

NOTE: THE FOLLOWING MINIPILES DO NOT LIE ON COLUMN LINE INTERSECTIONS.

MINIPILE	NORTHING	EASTING
1-A	668186.1555	2992681.0533
2-A	668154.4007	2992685.2874
1-D	668192.0524	2992724.0732
2-D	668160.3321	2992728.1089
3-D	668128.6689	2992732.3647

90% SUBMITTAL
NOT FOR CONSTRUCTION

FILE NAME: P:\MBTA\2009\E2X37800\CAD\700CADD\702STATIONS\South Acton\Structural\90% Submission\ 103-105_Found_Layout.dwg
PLOT DATE: Sep 06, 2011 - 10:39am

MASSACHUSETTS BAY TRANSPORTATION AUTHORITY
FITCHBURG COMMUTER RAIL LINE
IMPROVEMENT PROJECT
CONTRACT NO. G67CN01

SOUTH ACTON STATION
FOUNDATION PLAN
SHEET 1

ISSUE	DATE	DESCRIPTION	BY	CHKD.	APP.

HNTB 300 APOLLO DRIVE CHELMSFORD, MA 01824 (978) 905-4000
PROJECT MANAGER Date

MASSACHUSETTS BAY TRANSPORTATION AUTHORITY
APPROVED BY:
PROJECT MANAGER Date

JACOBS 343 CONGRESS STREET BOSTON, MA 02110 (617) 242-9222

HORIZ: AS NOTED	DES. BY	DR. BY	CHK. BY	PLAN NO.	ISSUE
VERT: N/A	JAG	JAG	MWT		
DATE: 9/8/11				SHEET S-103	

EAST TO BOSTON

WEST TO FITCHBURG

TOWN OF SOUTH ACTON

NOTES:

1. FOR GENERAL STRUCTURAL NOTES, SEE SHEETS S-100 AND S-101.
2. FOR PLATFORM LAYOUT PLANS, SEE SHEETS S-106 THROUGH S-108.
3. FOR MINIPILE AND PIER CAP DETAILS, SEE SHEETS S-109 THROUGH S-111.
4. FOR PRECAST PANEL DETAILS, SEE SHEETS S-112 THROUGH S-115.
5. FOR EXISTING AND PROPOSED SITE UTILITIES SEE UTILITY, CIVIL, AND ELECTRICAL SHEETS.

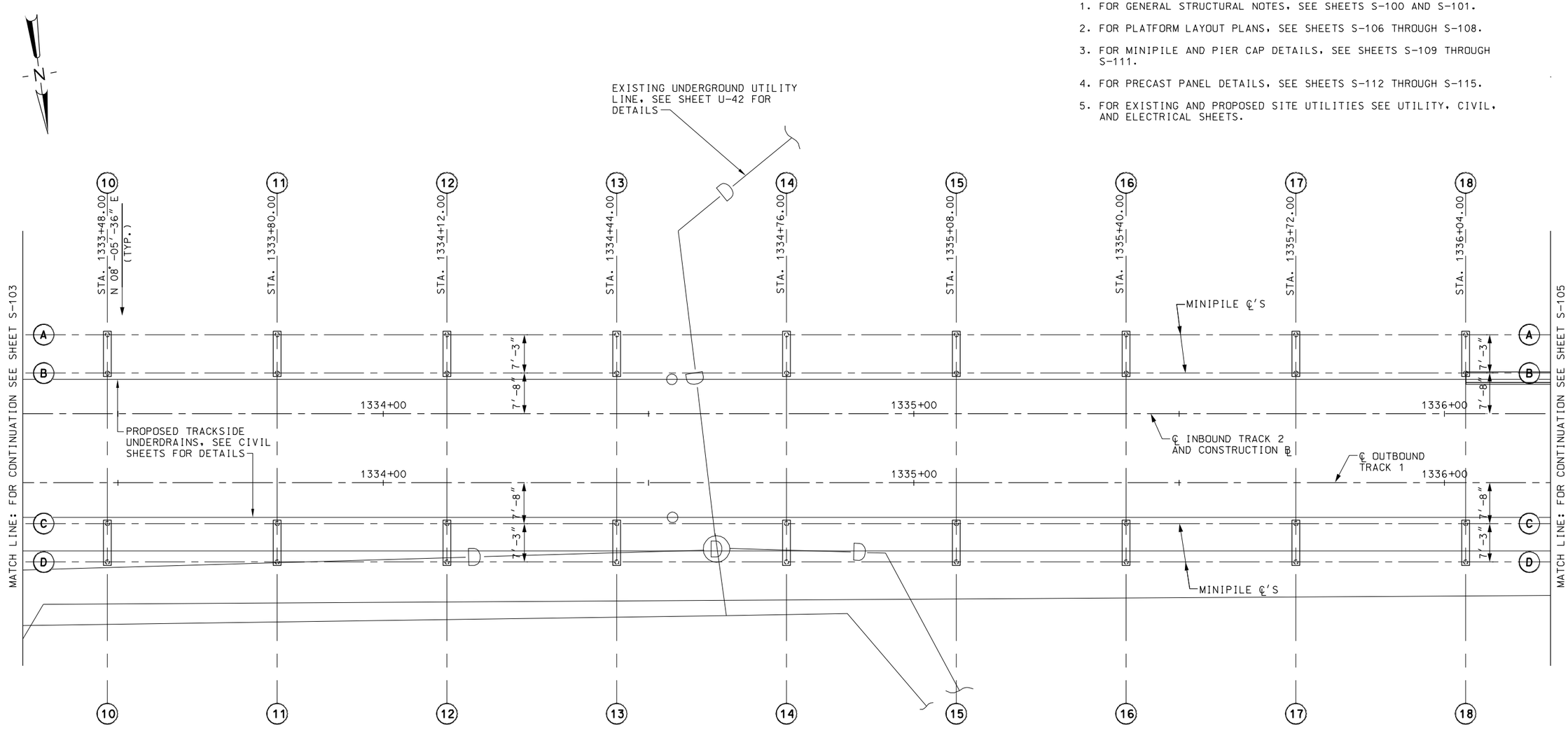

FOUNDATION PLAN

SCALE: 1" = 10'-0"

90% SUBMITTAL
NOT FOR CONSTRUCTION

ISSUE	DATE	DESCRIPTION	BY	CHKD.	APP.

JACOBS 343 CONGRESS STREET BOSTON, MA 02110 (617) 242-9222

MASSACHUSETTS BAY TRANSPORTATION AUTHORITY

FITCHBURG COMMUTER RAIL LINE IMPROVEMENT PROJECT CONTRACT NO. G67CN01

SOUTH ACTON STATION FOUNDATION PLAN SHEET 2

HNTB 300 APOLLO DRIVE CHELMSFORD, MA 01824 (978) 905-4000

PROJECT MANAGER Date

MASSACHUSETTS BAY TRANSPORTATION AUTHORITY

APPROVED BY:

PROJECT MANAGER Date

HORIZ: AS NOTED	DES. BY	DR. BY	CHK. BY
VERT: N/A	JAG	JAG	MWT
DATE: 9/8/11			

PLAN NO. S-104

ISSUE

FILE NAME: P:\MBTA\2008\E2X37800\CAD\700CADD\702STATIONS\South Acton\Structural\90% Submission\ 103-105_Found_Layout.dwg
PLOT DATE: Sep 06, 2011 - 10:39am

EAST TO BOSTON

WEST TO FITCHBURG

TOWN OF SOUTH ACTON

NOTES:

1. FOR GENERAL STRUCTURAL NOTES, SEE SHEETS S-100 AND S-101.
2. FOR PLATFORM LAYOUT PLANS, SEE SHEETS S-106 THROUGH S-108.
3. FOR MINIPILE AND PIER CAP DETAILS, SEE SHEETS S-109 THROUGH S-111.
4. FOR PRECAST PANEL DETAILS, SEE SHEETS S-112 THROUGH S-115.
5. FOR PROPOSED SITE UTILITIES SEE UTILITY, CIVIL, AND ELECTRICAL SHEETS.

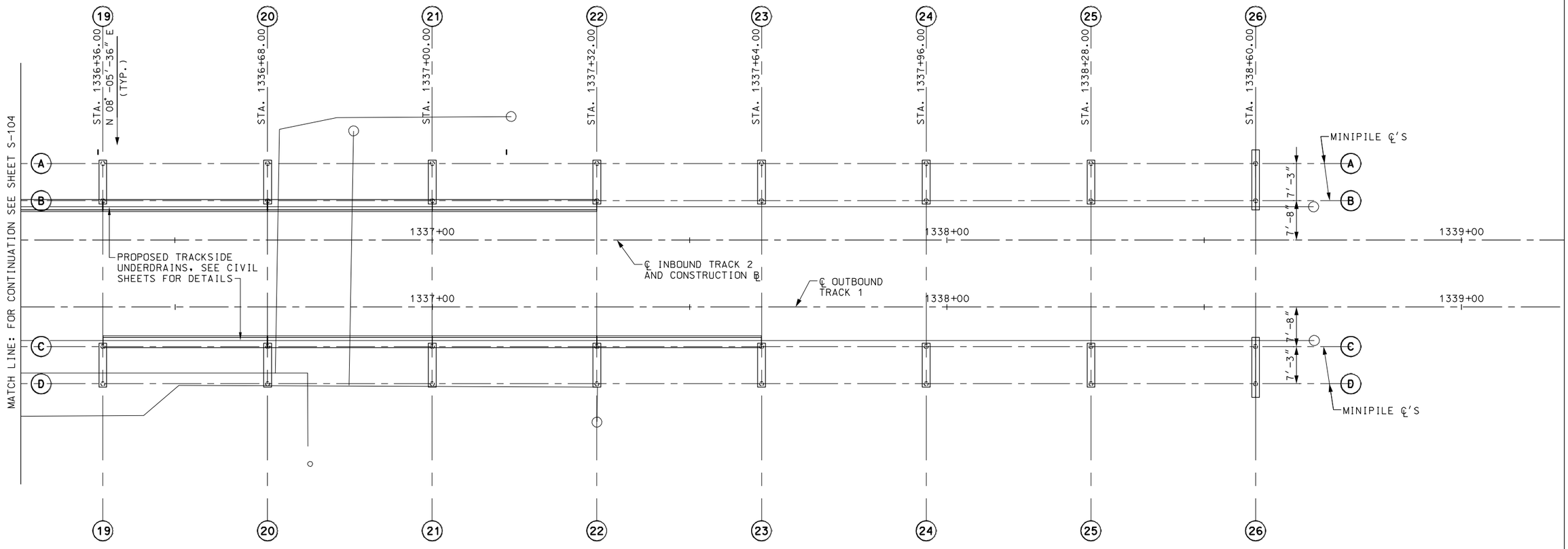

FOUNDATION PLAN

SCALE: 1" = 10'-0"

90% SUBMITTAL
NOT FOR CONSTRUCTION

ISSUE	DATE	DESCRIPTION	BY	CHK'D.	APP.

JACOBS
343 CONGRESS STREET
BOSTON, MA 02110
(617) 242-9222

MASSACHUSETTS BAY TRANSPORTATION AUTHORITY

FITCHBURG COMMUTER RAIL LINE
IMPROVEMENT PROJECT
CONTRACT NO. G67CN01

SOUTH ACTON STATION
FOUNDATION PLAN
SHEET 3

HNTB
300 APOLLO DRIVE
CHELMSFORD, MA 01824
(978) 905-4000

PROJECT MANAGER Date

MASSACHUSETTS BAY TRANSPORTATION AUTHORITY
APPROVED BY:
PROJECT MANAGER Date

HORIZ: AS NOTED	DES. BY	DR. BY	CHK. BY	PLAN NO.	ISSUE
VERT: N/A	JAG	JAG	MWT		
DATE: 9/8/11				SHEET S-105	

FILE NAME: P:\MBTA\2008\E2X37800\CAD\700CADD\702STATIONS\South Acton\Structural\90% Submission\ 103-105_Found_Layout.dwg
PLOT DATE: Sep 06, 2011 - 10:39am

EAST TO BOSTON

WEST TO FITCHBURG

TOWN OF SOUTH ACTON

NOTES:

1. FOR GENERAL STRUCTURAL NOTES, SEE SHEETS S-100 AND S-101.
2. FOR FOUNDATION LAYOUT PLANS, SEE SHEETS S-103 THROUGH S-105.
3. FOR MINIPILE AND PIER CAP DETAILS, SEE SHEETS S-109 THROUGH S-111.
4. FOR PRECAST PANEL DETAILS, SEE SHEETS S-112 THROUGH S-115.
5. FOR ADDITIONAL DETAILS SEE ARCHITECTURAL AND ELECTRICAL PLANS.
6. PROPOSED ELEVATIONS SHOWN ARE FOR REFERENCE ONLY. PLATFORM EDGE SHALL BE SET AT 4'-0" ABOVE TOP OF TRACK.

LEGEND:

[A] - PANEL TYPE LABEL

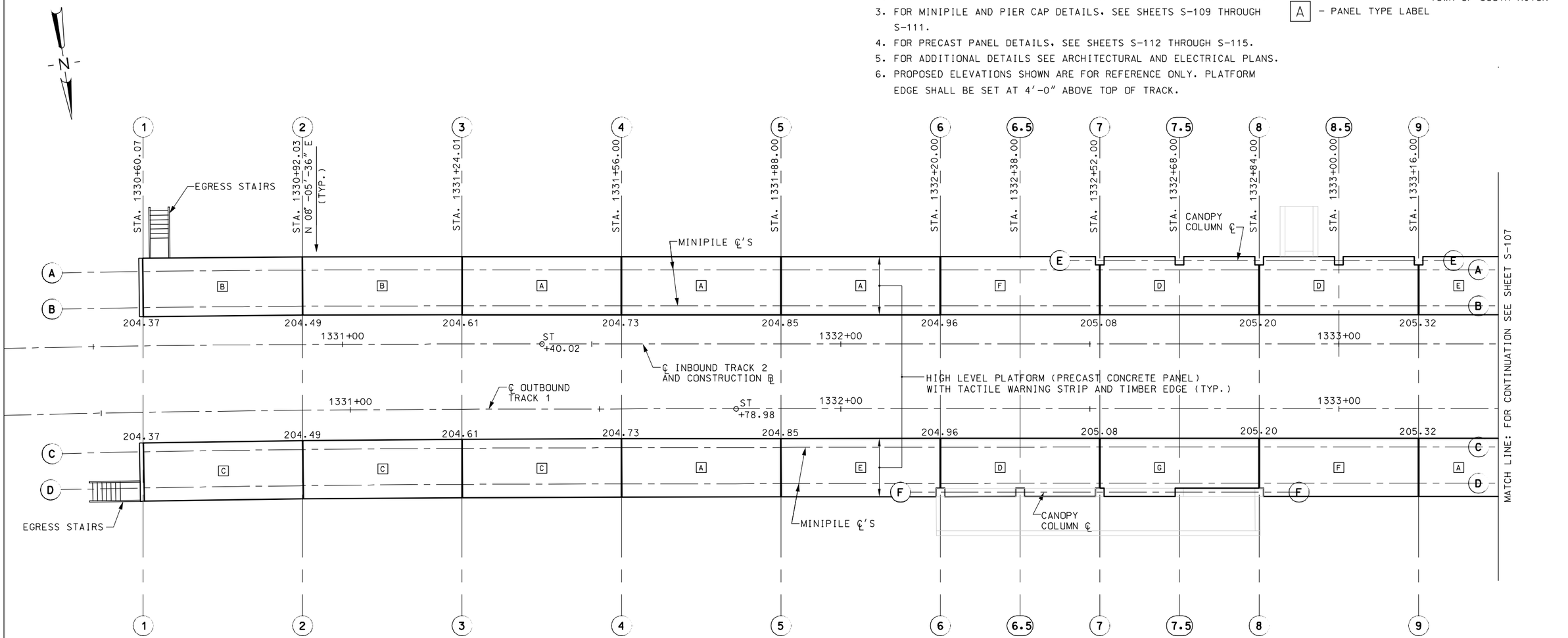

PLATFORM LAYOUT PLAN

PRECAST PANEL OFFSET TABLE

COLUMN LINE	STATION	℄ TRACK TO EDGE OF INBOUND PANEL	℄ TRACK TO EDGE OF OUTBOUND PANEL
1	1330+60.07	5'-10½" LT.	19'-5 9/16" RT.
2	1330+92.03	5'-10½" LT.	19'-3¼" RT.
3	1331+24.01	5'-10½" LT.	19'-1¼" RT.
4	1331+56.00	5'-10½" LT.	18'-11 5/16" RT.
5	1331+88.00	5'-10½" LT.	18'-11⅜" RT.
6	1332+20.00	5'-10½" LT.	18'-10⅞" RT.
7	1332+52.00	5'-10½" LT.	18'-10½" RT.
8	1332+84.00	5'-10½" LT.	18'-10½" RT.
9	1333+16.00	5'-10½" LT.	18'-10½" RT.

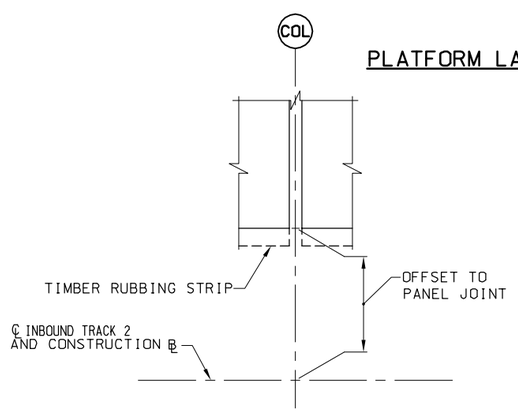

PRECAST PANEL DIMENSIONING DETAIL

NOT TO SCALE

90% SUBMITTAL

NOT FOR CONSTRUCTION

ISSUE	DATE	DESCRIPTION	BY	CHKD.	APP.

JACOBS 343 CONGRESS STREET BOSTON, MA 02110 (617) 242-9222

HNTB 300 APOLLO DRIVE CHELMSFORD, MA 01824 (978) 905-4000

PROJECT MANAGER Date

MASSACHUSETTS BAY TRANSPORTATION AUTHORITY

APPROVED BY:

PROJECT MANAGER Date

MASSACHUSETTS BAY TRANSPORTATION AUTHORITY

FITCHBURG COMMUTER RAIL LINE IMPROVEMENT PROJECT CONTRACT NO. G67CN01

SOUTH ACTON STATION PLATFORM LAYOUT PLAN SHEET 1

HORIZ: AS NOTED	DES. BY	DR. BY	CHK. BY	PLAN NO.	ISSUE
VERT: N/A	JAG	JAG	MWT		
DATE: 9/8/11				SHEET S-106	

FILE NAME: P:\MBTA\2008\E2X37800\CAD\700CADD\702STATIONS\South Acton\Structural\90% Submission\106-108_Plot_Layout.dwg
PLOT DATE: Sep 06, 2011 - 10:39am

EAST TO BOSTON

WEST TO FITCHBURG

TOWN OF SOUTH ACTON

NOTES:

1. FOR GENERAL STRUCTURAL NOTES, SEE SHEETS S-100 AND S-101.
2. FOR FOUNDATION LAYOUT PLANS, SEE SHEETS S-103 THROUGH S-105.
3. FOR MINIPILE AND PIER CAP DETAILS, SEE SHEETS S-109 THROUGH S-111.
4. FOR PRECAST PANEL DETAILS, SEE SHEETS S-112 THROUGH S-115.
5. FOR ADDITIONAL DETAILS SEE ARCHITECTURAL AND ELECTRICAL PLANS.
6. PROPOSED ELEVATIONS SHOWN ARE FOR REFERENCE ONLY. PLATFORM EDGE SHALL BE SET AT 4'-0" ABOVE TOP OF TRACK.

LEGEND:

[A] - PANEL TYPE LABEL

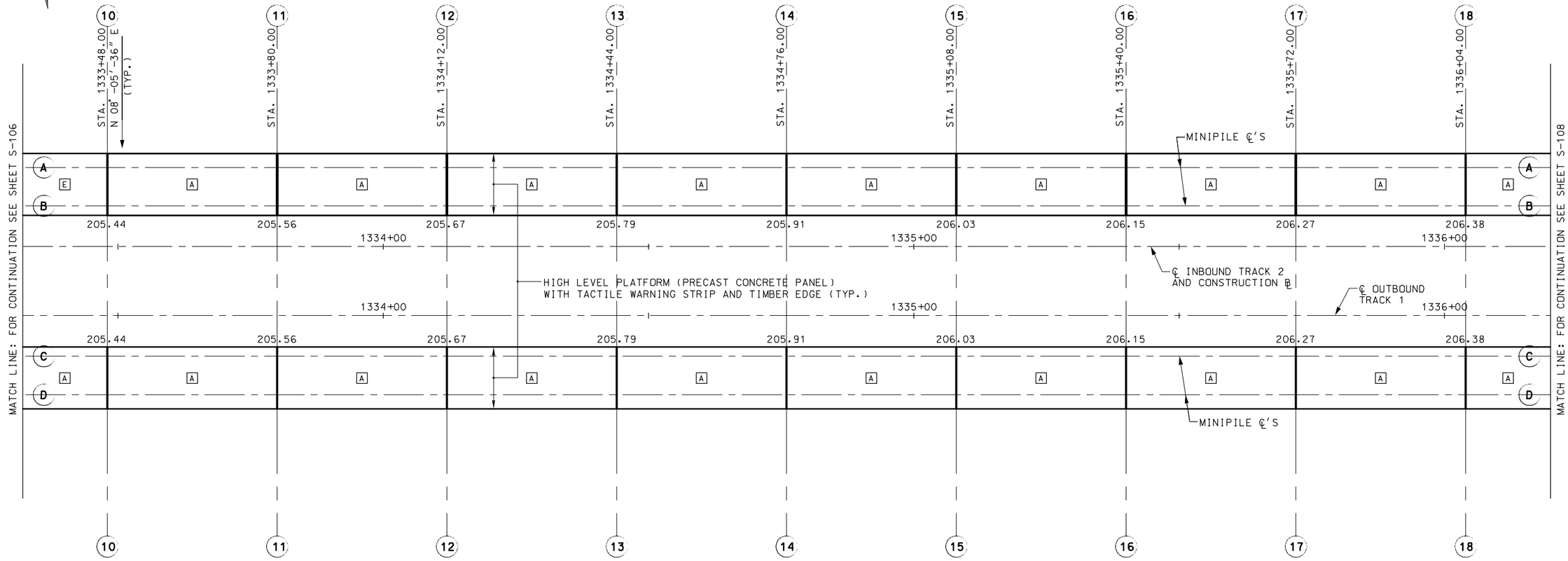

PRECAST PANEL OFFSET TABLE

COLUMN LINE	STATION	℄ TRACK TO EDGE OF INBOUND PANEL	℄ TRACK TO EDGE OF OUTBOUND PANEL
10	1333+48.00	5'-10½" LT.	18'-10½" RT.
11	1333+80.00	5'-10½" LT.	18'-10½" RT.
12	1334+12.00	5'-10½" LT.	18'-10½" RT.
13	1334+44.00	5'-10½" LT.	18'-10½" RT.
14	1337+76.00	5'-10½" LT.	18'-10½" RT.
15	1335+08.00	5'-10½" LT.	18'-10½" RT.
16	1335+40.00	5'-10½" LT.	18'-10½" RT.
17	1335+72.00	5'-10½" LT.	18'-10½" RT.
18	1336+04.00	5'-10½" LT.	18'-10½" RT.

PLATFORM LAYOUT PLAN

SCALE: 1" = 10'-0"

90% SUBMITTAL
NOT FOR CONSTRUCTION

ISSUE	DATE	DESCRIPTION	BY	CHKD.	APP.

JACOBS
343 CONGRESS STREET
BOSTON, MA 02110
(617) 242-9222

MASSACHUSETTS BAY TRANSPORTATION AUTHORITY

FITCHBURG COMMUTER RAIL LINE
IMPROVEMENT PROJECT
CONTRACT NO. G67CN01

SOUTH ACTON STATION
PLATFORM LAYOUT PLAN
SHEET 2

HNTB
300 APOLLO DRIVE
CHELMSFORD, MA 01824
(978) 905-4000

PROJECT MANAGER Date

MASSACHUSETTS BAY TRANSPORTATION AUTHORITY

APPROVED BY:

PROJECT MANAGER Date

HORIZ: AS NOTED	DES. BY	DR. BY	CHK. BY	PLAN NO.	ISSUE
VERT: N/A	JAG	JAG	MWT		
DATE: 9/8/11				SHEET S-107	

FILE NAME: P:\MBTA\2009\E2X37800\CAD\700CADD\702STATIONS\South Acton\Structural\90% Submission\106-108_Plat_Layout.dwg
PLOT DATE: Sep 06, 2011 - 10:39am

EAST TO BOSTON

WEST TO FITCHBURG

TOWN OF SOUTH ACTON

NOTES:

1. FOR GENERAL STRUCTURAL NOTES, SEE SHEETS S-100 AND S-101.
2. FOR FOUNDATION LAYOUT PLANS, SEE SHEETS S-103 THROUGH S-105.
3. FOR MINIPILE AND PIER CAP DETAILS, SEE SHEETS S-109 THROUGH S-111.
4. FOR PRECAST PANEL DETAILS, SEE SHEETS S-112 THROUGH S-115.
5. FOR ADDITIONAL DETAILS SEE ARCHITECTURAL AND ELECTRICAL PLANS.
6. PROPOSED ELEVATIONS SHOWN ARE FOR REFERENCE ONLY. PLATFORM EDGE SHALL BE SET AT 4'-0" ABOVE TOP OF TRACK.

LEGEND:

[A] - PANEL TYPE LABEL

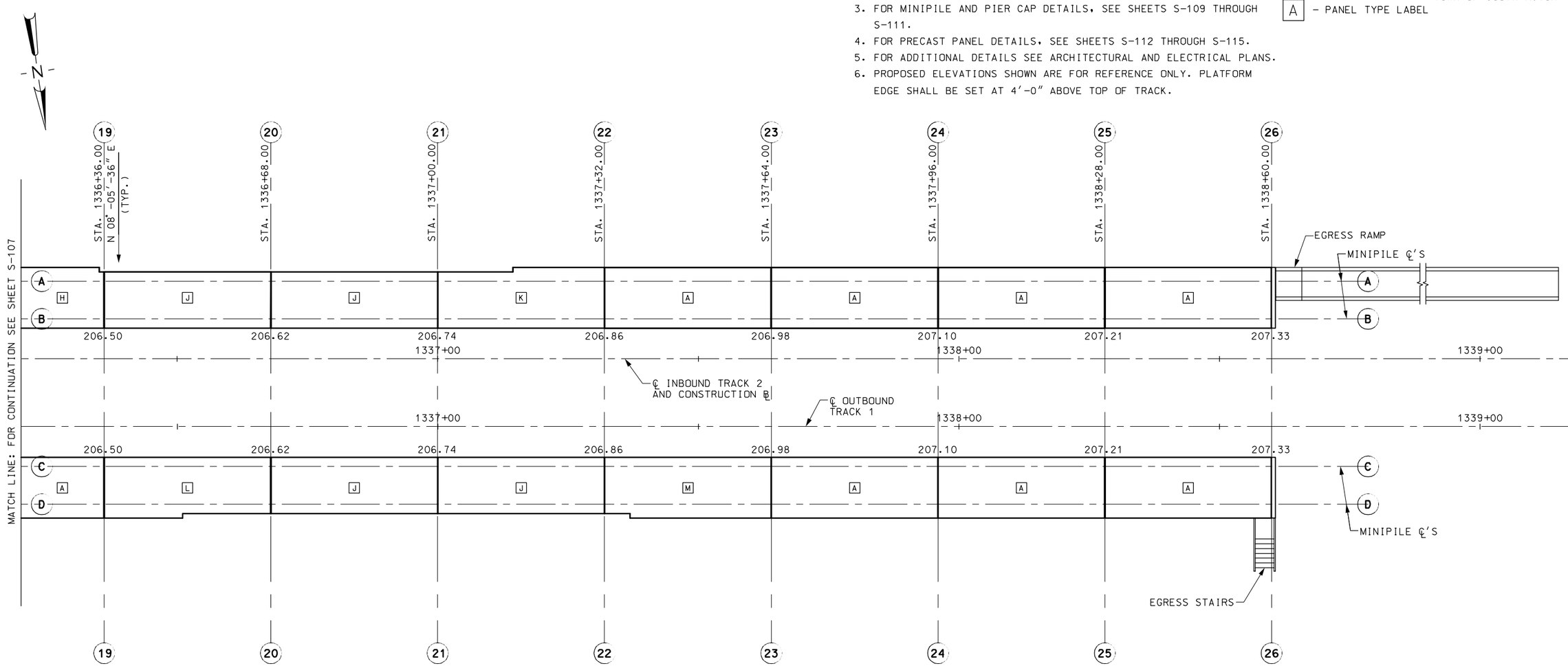

PRECAST PANEL OFFSET TABLE

COLUMN LINE	STATION	℄ TRACK TO EDGE OF INBOUND PANEL	℄ TRACK TO EDGE OF OUTBOUND PANEL
19	1336+36.00	5'-10½" LT.	18'-10½" RT.
20	1336+68.00	5'-10½" LT.	18'-10½" RT.
21	1337+00.00	5'-10½" LT.	18'-10½" RT.
22	1337+32.00	5'-10½" LT.	18'-10½" RT.
23	1337+64.00	5'-10½" LT.	18'-10½" RT.
24	1337+96.00	5'-10½" LT.	18'-10½" RT.
25	1338+28.00	5'-10½" LT.	18'-10½" RT.
26	1338+60.00	5'-10½" LT.	18'-10½" RT.

PLATFORM LAYOUT PLAN

SCALE: 1" = 10'-0"

90% SUBMITTAL
NOT FOR CONSTRUCTION

FILE NAME: P:\MBTA\2009\E2X37800\CAD\700CADD\702STATIONS\South Acton\Structural\90% Submission\ 106-108_Plat_Layout.dwg
PLOT DATE: Sep 06, 2011 - 10:39am

MASSACHUSETTS BAY TRANSPORTATION AUTHORITY

FITCHBURG COMMUTER RAIL LINE
IMPROVEMENT PROJECT
CONTRACT NO. G67CN01

SOUTH ACTON STATION
PLATFORM LAYOUT PLAN
SHEET 3

ISSUE	DATE	DESCRIPTION	BY	CHKD.	APP.

JACOBS 343 CONGRESS STREET BOSTON, MA 02110 (617) 242-9222

HNTB 300 APOLLO DRIVE CHELMSFORD, MA 01824 (978) 905-4000

PROJECT MANAGER Date

MASSACHUSETTS BAY TRANSPORTATION AUTHORITY
APPROVED BY:
PROJECT MANAGER Date

HORIZ: AS NOTED	DES. BY	DR. BY	CHK. BY	PLAN NO.	ISSUE
VERT: N/A	JAG	JAG	MWT		
DATE: 9/8/11				SHEET S-108	

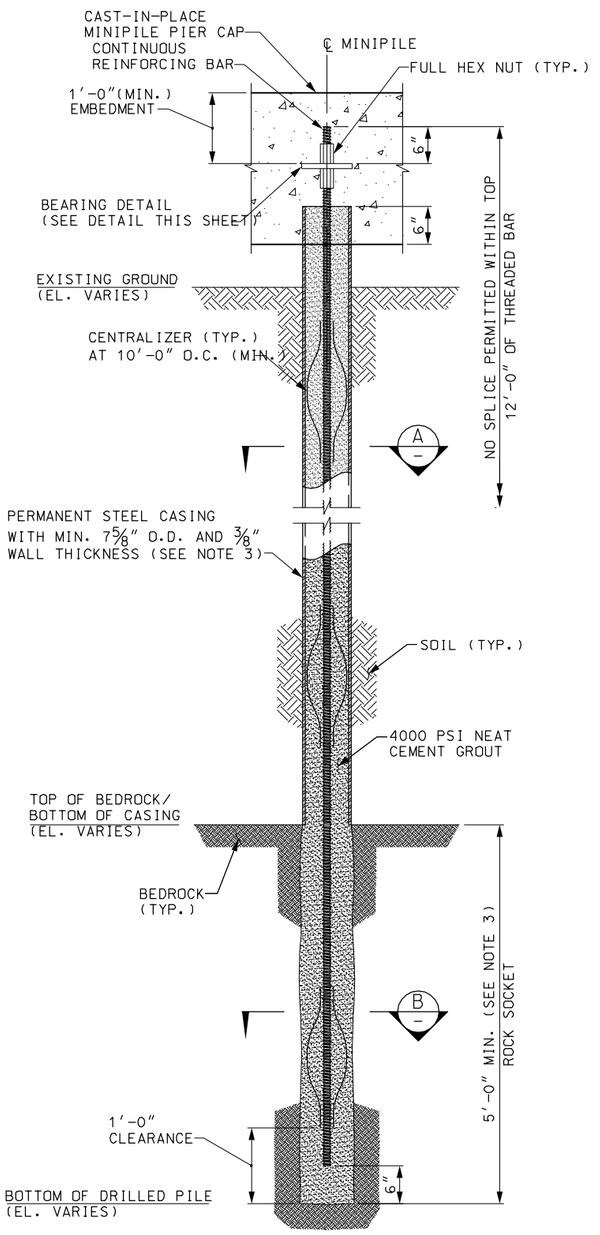

DRILLED MINIPILE ELEVATION DETAIL
SCALE: 1" = 1'-0"

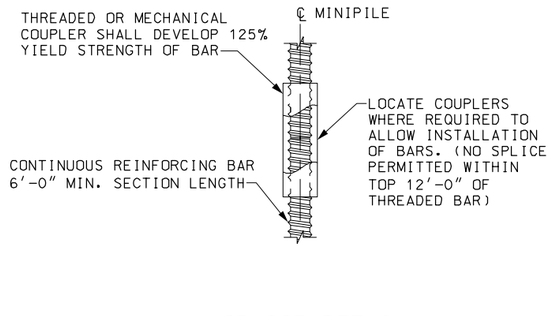

SPLICE DETAIL
SCALE: 3" = 1'-0"

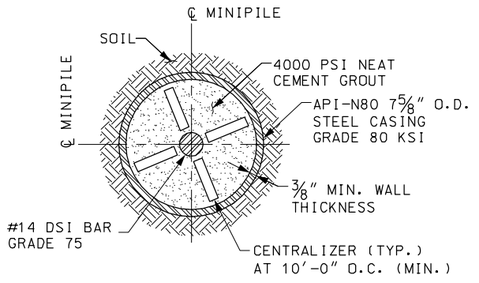

SECTION A
SCALE: 3" = 1'-0"

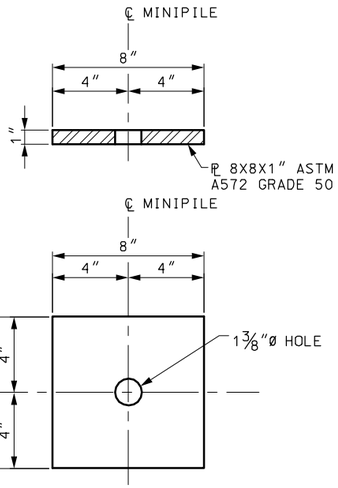

BEARING PLATE DETAIL
SCALE: 3" = 1'-0"

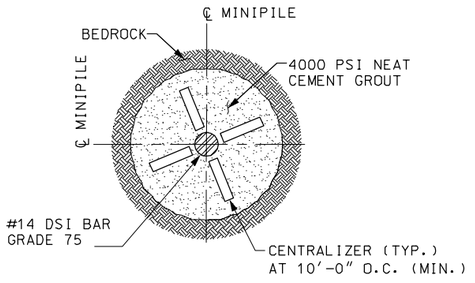

SECTION B
SCALE: 3" = 1'-0"

NOTES:

1. FOR GENERAL STRUCTURAL NOTES, SEE SHEETS S-100 AND S-101.
2. FOR COMPLETE PILE LOAD TEST PROCEDURE, SEE DESIGN SPECIFICATIONS.
3. A MINIMUM OF 14'-0" LONG STEEL CASING IS REQUIRED. FOR MINIPILES WITH LENGTH LESS THAN 14'-0" FROM GROUND SURFACE TO BEDROCK SURFACE, PERMANENT STEEL CASING SHALL BE EXTENDED INTO BEDROCK A MINIMUM OF 2'-0" AND ROCK SOCKET SHALL BE INCREASED 2'-0".

SACRIFICIAL TEST LOADING SCHEDULE (TEST PILE)	
LOAD	HOLD TIME
0.05 DL MAX. (AL)	UNTIL MOVEMENT STABILIZES
0.25 DL	UNTIL MOVEMENT STABILIZES
0.50 DL	UNTIL MOVEMENT STABILIZES
0.75 DL	UNTIL MOVEMENT STABILIZES
1.00 DL	UNTIL MOVEMENT STABILIZES
1.25 DL	UNTIL MOVEMENT STABILIZES
1.50 DL	UNTIL MOVEMENT STABILIZES
1.75 DL	UNTIL MOVEMENT STABILIZES
2.00 DL (MAX. TEST LOAD)	CREEP TEST (SEE NOTE 2)
1.75 DL	15 MINUTES
1.50 DL	15 MINUTES
1.25 DL	15 MINUTES
1.00 DL	15 MINUTES
0.75 DL	15 MINUTES
0.50 DL	15 MINUTES
0.25 DL	15 MINUTES
0	UNTIL MOVEMENT STABILIZES

PROOF TEST LOADING SCHEDULE (PRODUCTION PILE)	
LOAD	HOLD TIME
0.05 DL MAX. (AL)	UNTIL MOVEMENT STABILIZES
0.25 DL	UNTIL MOVEMENT STABILIZES
0.50 DL	UNTIL MOVEMENT STABILIZES
0.75 DL	UNTIL MOVEMENT STABILIZES
1.00 DL	UNTIL MOVEMENT STABILIZES
1.25 DL	UNTIL MOVEMENT STABILIZES
1.33 DL (MAX. TEST LOAD)	CREEP TEST (SEE NOTE 2)
1.25 DL	15 MINUTES
1.00 DL	15 MINUTES
0.75 DL	15 MINUTES
0.50 DL	15 MINUTES
0.25 DL	15 MINUTES
0	UNTIL MOVEMENT STABILIZES

90% SUBMITTAL
NOT FOR CONSTRUCTION

MASSACHUSETTS BAY TRANSPORTATION AUTHORITY
FITCHBURG COMMUTER RAIL LINE
IMPROVEMENT PROJECT
CONTRACT NO. G67CN01

SOUTH ACTON STATION
MINIPILE DETAILS

ISSUE	DATE	DESCRIPTION	BY	CHKD.	APP.

JACOBS — 343 CONGRESS STREET, BOSTON, MA 02110, (617) 242-9222

HNTB — 300 APOLLO DRIVE, CHELMSFORD, MA 01824, (978) 905-4000

PROJECT MANAGER Date

MASSACHUSETTS BAY TRANSPORTATION AUTHORITY
APPROVED BY:
PROJECT MANAGER Date

HORIZ: AS NOTED	DES. BY	DR. BY	CHK. BY	PLAN NO.	ISSUE
VERT: AS NOTED	JAG	JAG	MWT		
DATE: 9/8/11				SHEET S-109	

FILE NAME: P:\MBTA\2008\E2X37800\CAD\700CADD\702STATIONS\South Acton\Structural\90% Submission\109-111_Minipiles_PierCap_Dets.dwg
PLOT DATE: Sep 06, 2011 - 10:39am

NOTES:

1. FOR GENERAL STRUCTURAL NOTES, SEE SHEETS S-100 AND S-101.
2. FOR MINIPILE DETAILS, SEE SHEET S-109.
3. FOR PLATFORM ANCHORAGE DETAILS, SEE SHEET S-115.

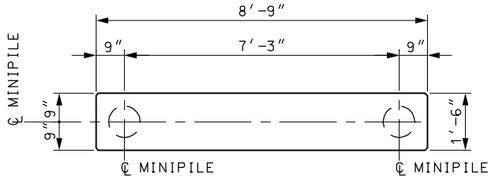

NOTE:
PRECAST CONCRETE PLATFORM ABOVE NOT SHOWN FOR CLARITY.

PLAN

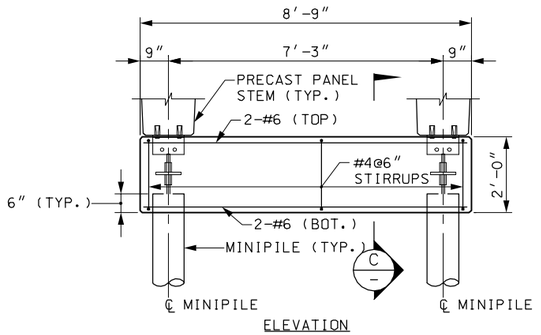

ELEVATION

TYPICAL INTERMEDIATE PIER CAP
SCALE: 1/2″ = 1′-0″

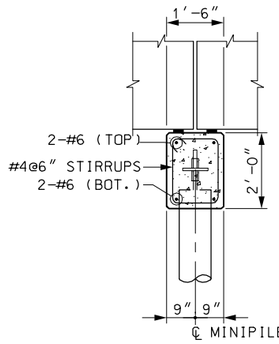

SECTION C
SCALE: 1/2″ = 1′-0″

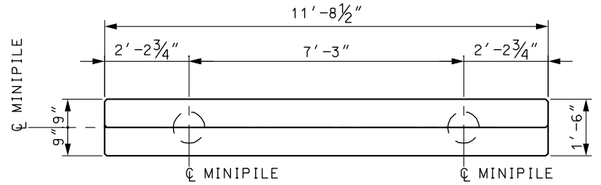

NOTE:
PRECAST CONCRETE PLATFORM ABOVE NOT SHOWN FOR CLARITY.

PLAN

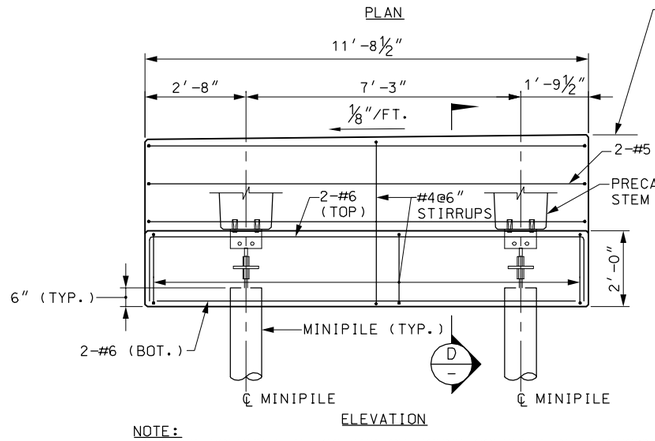

ELEVATION

NOTE:
INBOUND COLUMN LINE 26 AND OUTBOUND COLUMN LINE 1 SHOWN.

TYPICAL END PIER CAP
SCALE: 1/2″ = 1′-0″

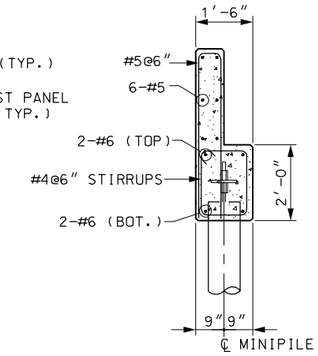

SECTION D
SCALE: 1/2″ = 1′-0″

90% SUBMITTAL
NOT FOR CONSTRUCTION

MASSACHUSETTS BAY TRANSPORTATION AUTHORITY
FITCHBURG COMMUTER RAIL LINE
IMPROVEMENT PROJECT
CONTRACT NO. G67CN01

SOUTH ACTON STATION
PIER CAP DETAILS
SHEET 1

ISSUE	DATE	DESCRIPTION	BY	CHKD.	APP.

HNTB
300 APOLLO DRIVE
CHELMSFORD, MA 01824
(978) 905-4000

PROJECT MANAGER Date

MASSACHUSETTS BAY TRANSPORTATION AUTHORITY
APPROVED BY:
PROJECT MANAGER Date

JACOBS
343 CONGRESS STREET
BOSTON, MA 02110
(617) 242-9222

HORIZ: AS NOTED	DES. BY	DR. BY	CHK. BY	PLAN NO.	ISSUE
VERT: AS NOTED	JAG	JAG	MWT		
DATE: 9/8/11				SHEET S-110	

FILE NAME: P:\MBTA\2009\E22X37800\CAD\700CADD\702STATIONS\South Acton\Structural\90% Submission\109-111_Minipiles_PierCap_Dets.dwg
PLOT DATE: Sep 06, 2011 - 10:39am

NOTES:

1. FOR GENERAL STRUCTURAL NOTES, SEE SHEETS S-100 AND S-101.
2. FOR MINIPILE DETAILS, SEE SHEET S-109.
3. FOR PLATFORM ANCHORAGE DETAILS, SEE SHEET S-115.

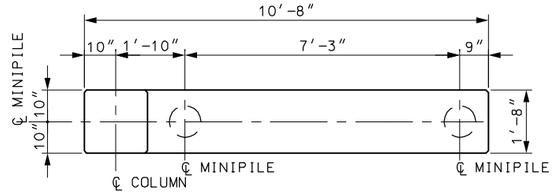

NOTE:
PRECAST CONCRETE PLATFORM ABOVE NOT SHOWN FOR CLARITY.

PLAN

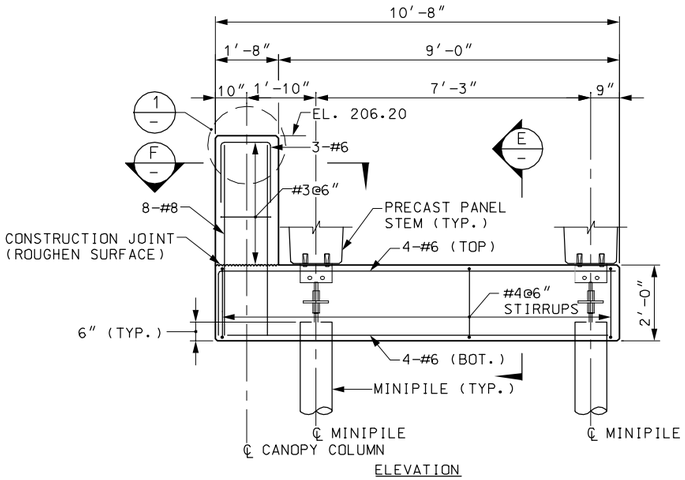

ELEVATION

TYPICAL PIER CAP AT INBOUND CANOPY

(5 LOCATIONS)

SCALE: 1/2" = 1'-0"

NOTE:
SEE FOUNDATION PLAN ON SHEET S-103 FOR LOCATION OF INBOUND CANOPY PIER CAPS

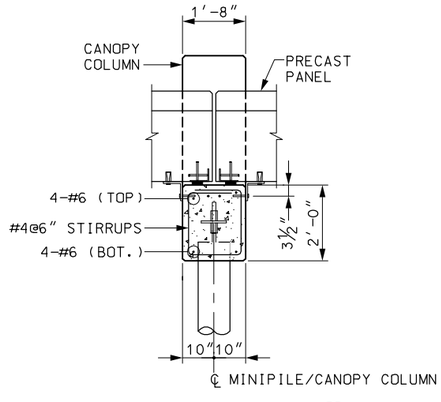

SECTION E
SCALE: 1/2" = 1'-0"

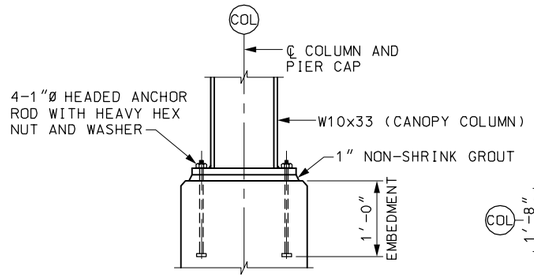

DETAIL 1
SCALE: 1/2" = 1'-0"

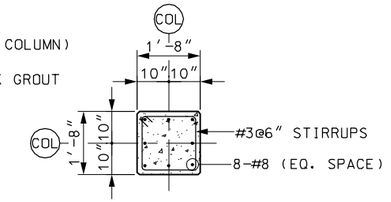

SECTION F
SCALE: 1/2" = 1'-0"

90% SUBMITTAL
NOT FOR CONSTRUCTION

ISSUE	DATE	DESCRIPTION	BY	CHKD.	APP.

JACOBS
343 CONGRESS STREET
BOSTON, MA 02110
(617) 242-9222

MASSACHUSETTS BAY TRANSPORTATION AUTHORITY

FITCHBURG COMMUTER RAIL LINE
IMPROVEMENT PROJECT
CONTRACT NO. G67CN01

SOUTH ACTON STATION
PIER CAP DETAILS
SHEET 2

HNTB
300 APOLLO DRIVE
CHELMSFORD, MA 01824
(978) 905-4000

PROJECT MANAGER Date

MASSACHUSETTS BAY TRANSPORTATION AUTHORITY

APPROVED BY:

PROJECT MANAGER Date

HORIZ: AS NOTED	DES. BY	DR. BY	CHK. BY	PLAN NO.	ISSUE
VERT: AS NOTED	JAG	JAG	MWT		
DATE: 9/8/11				SHEET S-111	

FILE NAME: P:\MBTA\2008\E2X37800\CAD\700CADD\702STATIONS\South Acton\Structural\90% Submission\109-111_Minipiles_PierCap_Dets.dwg
PLOT DATE: Sep 06, 2011 - 10:39am

NOTES:

1. FOR GENERAL STRUCTURAL NOTES, SEE SHEETS S-100 AND S-101.
2. FOR EXISTING AND PROPOSED UTILITY LOCATIONS SEE UTILITY, CIVIL, AND ELECTRICAL PLANS.
3. FOR MINIPILE AND PIER CAP DETAILS, SEE SHEETS S-109 THROUGH S-111.

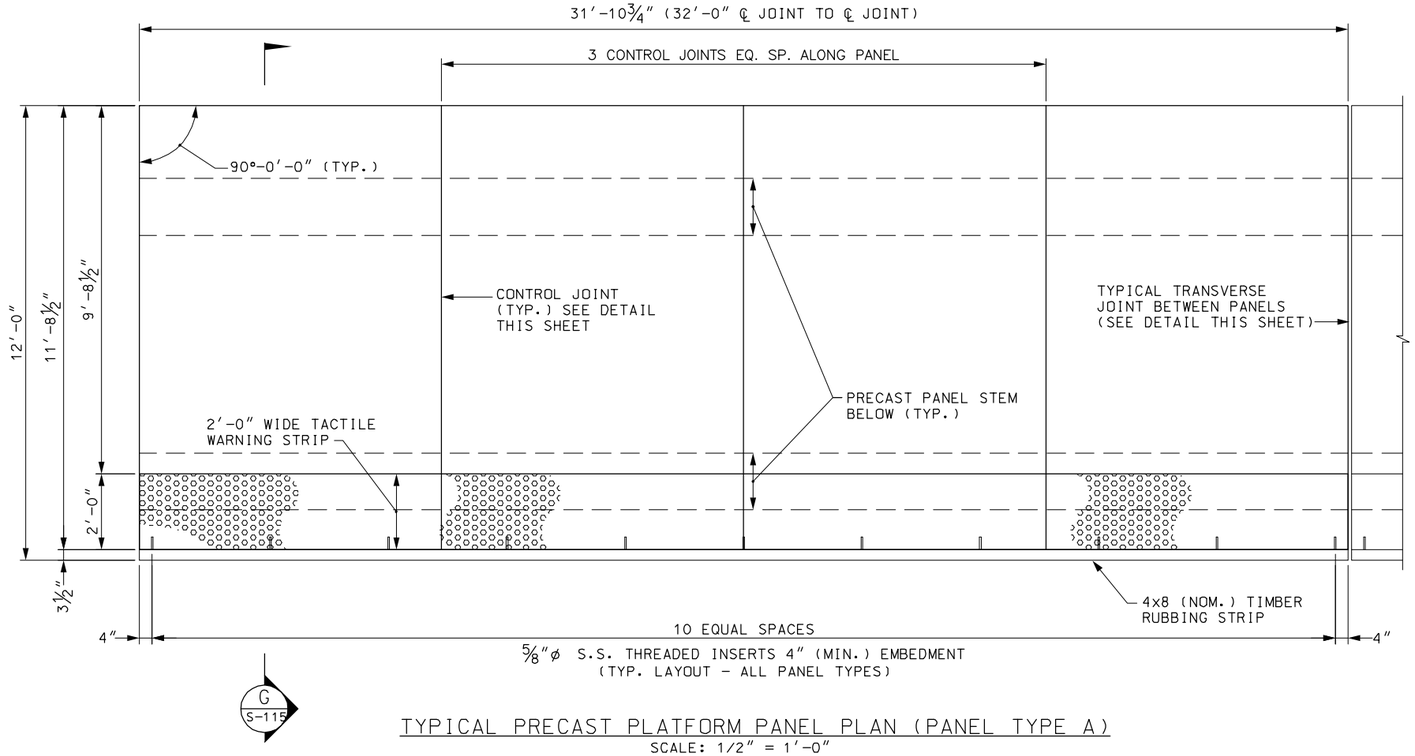

TYPICAL PRECAST PLATFORM PANEL PLAN (PANEL TYPE A)
SCALE: 1/2″ = 1′-0″

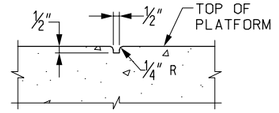

CONTROL JOINT DETAIL
SCALE: 2″ = 1′-0″

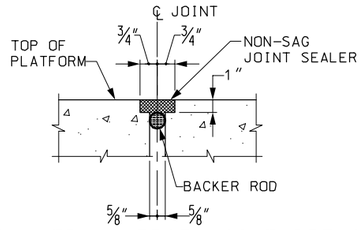

TYPICAL TRANSVERSE JOINT DETAIL BETWEEN PANEL
SCALE: 2″ = 1′-0″

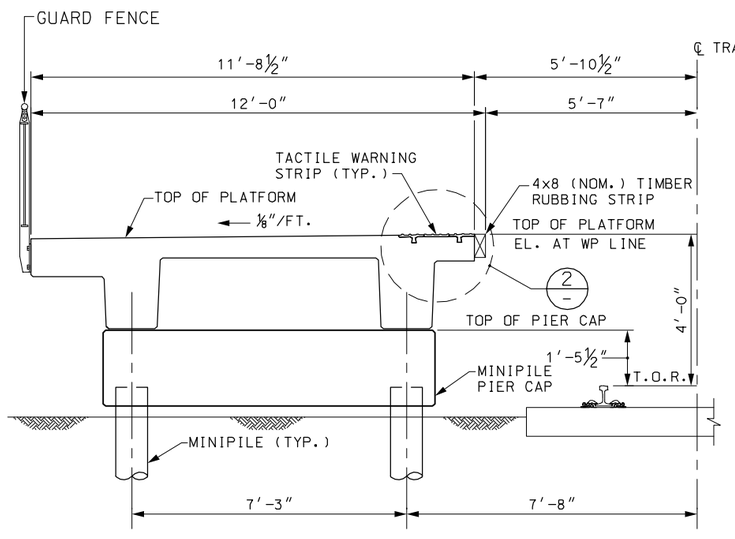

TYPICAL PLATFORM SECTION
SCALE: 1/2″ = 1′-0″

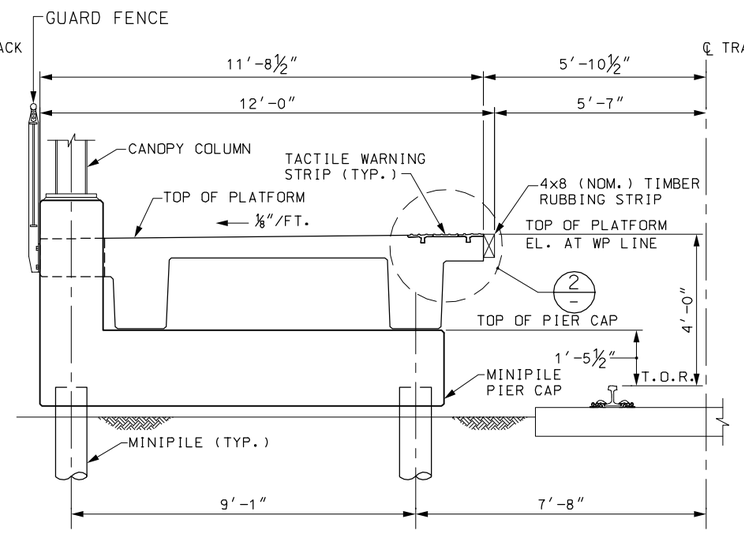

PLATFORM SECTION AT INBOUND CANOPY
SCALE: 1/2″ = 1′-0″

NOTE:
SET TOP OF PIER CAP SO THAT THE ADDITION OF THE PLATFORM PANEL AND BEARING PAD IS EQUAL TO 4′-0″ ABOVE T.O.R. AT THE PLATFORM EDGE.

PLATFORM PANEL QUANTITY TABLE

PANEL TYPE	NUMBER REQUIRED
A	29
B	2
C	3
D	3
E	2
F	2
G	1
H	1
J	4
K	1
L	1
M	1

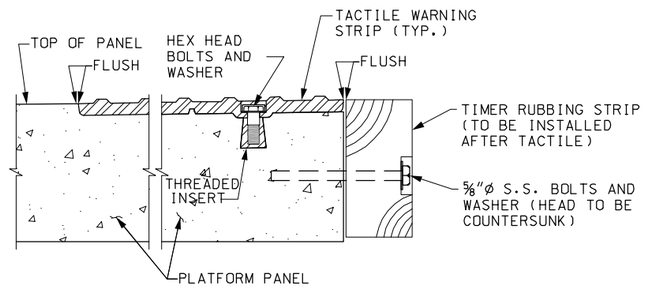

DETAIL 2 / SCALE: 3″ = 1′-0″

90% SUBMITTAL
NOT FOR CONSTRUCTION

ISSUE	DATE	DESCRIPTION	BY	CHKD.	APP.

JACOBS 343 CONGRESS STREET BOSTON, MA 02110 (617) 242-9222

HNTB 300 APOLLO DRIVE CHELMSFORD, MA 01824 (978) 905-4000

PROJECT MANAGER Date

MASSACHUSETTS BAY TRANSPORTATION AUTHORITY

APPROVED BY:

PROJECT MANAGER Date

	DES. BY	DR. BY	CHK. BY
HORIZ: AS NOTED	JAG	JAG	MWT
VERT: AS NOTED			
DATE: 9/8/11			

PLAN NO. SHEET S-112 ISSUE

MASSACHUSETTS BAY TRANSPORTATION AUTHORITY
FITCHBURG COMMUTER RAIL LINE
IMPROVEMENT PROJECT
CONTRACT NO. G67CN01

SOUTH ACTON STATION
PRECAST PLATFORM PANEL DETAILS
SHEET 1

FILE NAME: P:\MBTA\2009\E22X37800\CAD\700CADD\702STATIONS\South Acton\Structural\90% Submission\ 112-114_Plat_Dets.dwg
PLOT DATE: Sep 06, 2011 - 10:39am

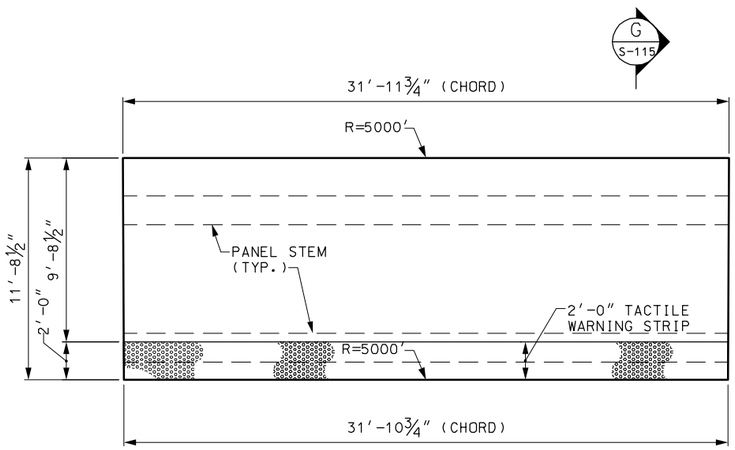

PANEL TYPE B
SCALE: 1/4″ = 1′-0″

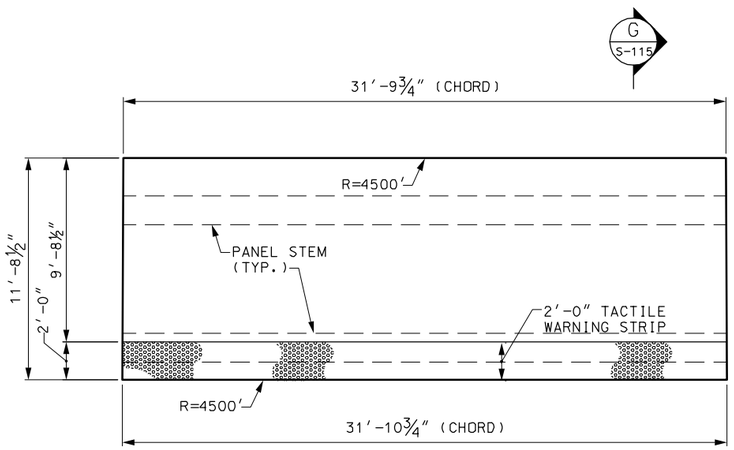

PANEL TYPE C
SCALE: 1/4″ = 1′-0″

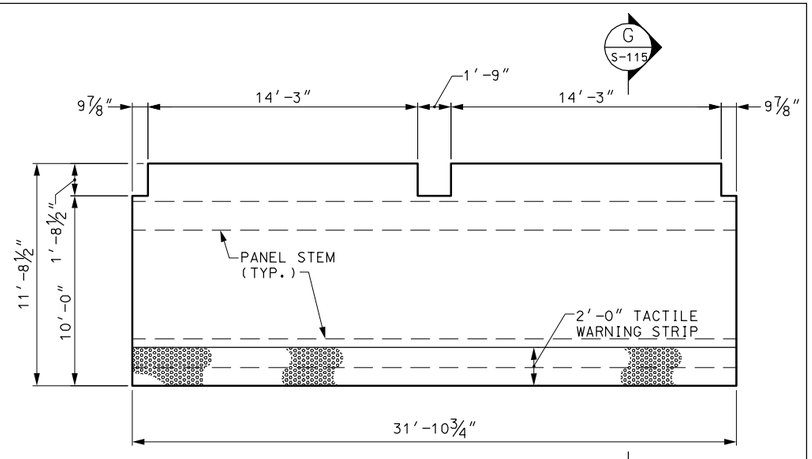

PANEL TYPE D
SCALE: 1/4″ = 1′-0″

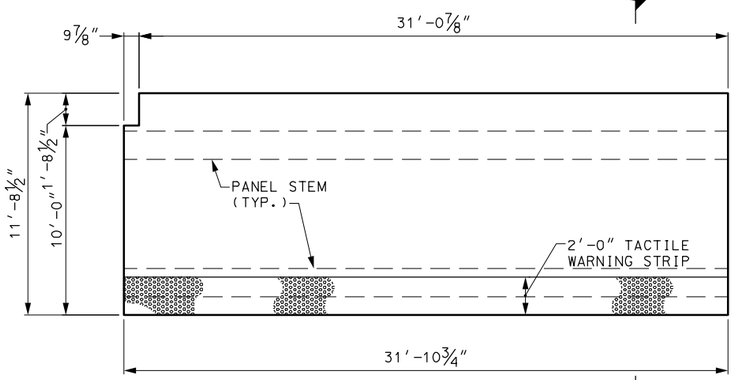

PANEL TYPE E
SCALE: 1/4″ = 1′-0″

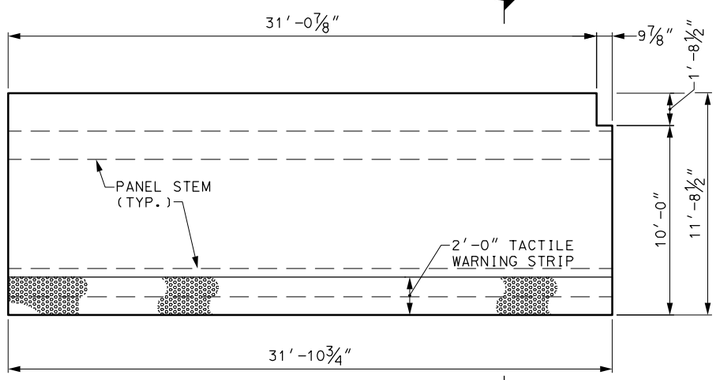

PANEL TYPE F
SCALE: 1/4″ = 1′-0″

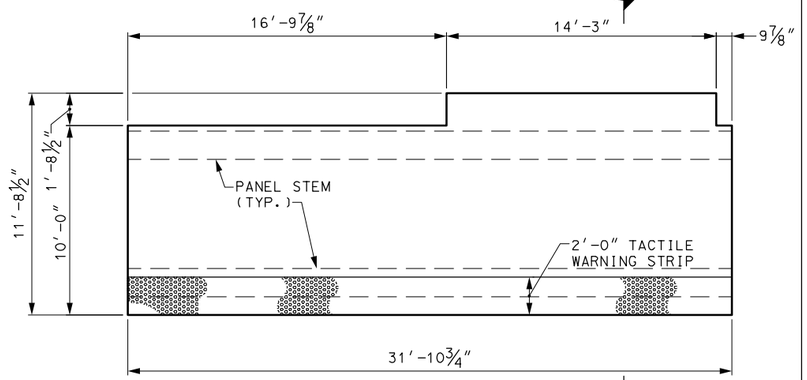

PANEL TYPE G
SCALE: 1/4″ = 1′-0″

NOTES:

1. FOR GENERAL STRUCTURAL NOTES, SEE SHEETS S-100 AND S-101.
2. FOR UTILITY LOCATIONS SEE CIVIL AND ELECTRICAL PLANS.
3. FOR MINIPILE AND PIER CAP DETAILS, SEE SHEETS S-109 THROUGH S-111.
4. ACCORDING TO OLDCASTLE, CAMBER THESE PANELS IS NOT REQUIRED

90% SUBMITTAL
NOT FOR CONSTRUCTION

MASSACHUSETTS BAY TRANSPORTATION AUTHORITY

FITCHBURG COMMUTER RAIL LINE
IMPROVEMENT PROJECT
CONTRACT NO. G67CN01

SOUTH ACTON STATION
PRECAST PLATFORM PANEL DETAILS
SHEET 2

ISSUE	DATE	DESCRIPTION	BY	CHK'D.	APP.

HNTB — 300 APOLLO DRIVE, CHELMSFORD, MA 01824, (978) 905-4000

JACOBS — 343 CONGRESS STREET, BOSTON, MA 02110, (617) 242-9222

PROJECT MANAGER — Date

MASSACHUSETTS BAY TRANSPORTATION AUTHORITY
APPROVED BY:
PROJECT MANAGER — Date

HORIZ: AS NOTED	DES. BY	DR. BY	CHK. BY	PLAN NO.	ISSUE
VERT: AS NOTED	JAG	JAG	MWT		
DATE: 9/8/11				SHEET S-113	

FILE NAME: P:\MBTA\2008\E2X37800\CAD\700CADD\702STATIONS\South Acton\Structural\90% Submission\ 112-114_Plat_Dets.dwg
PLOT DATE: Sep 06, 2011 - 10:39am

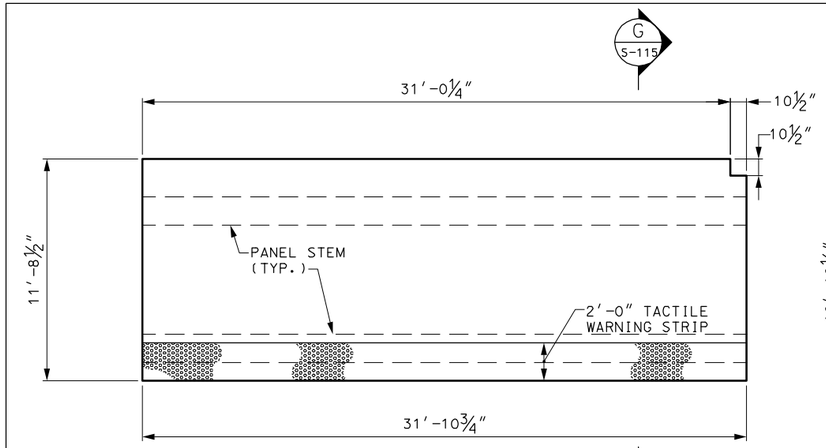

PANEL TYPE H
SCALE: 1/4″ = 1′-0″

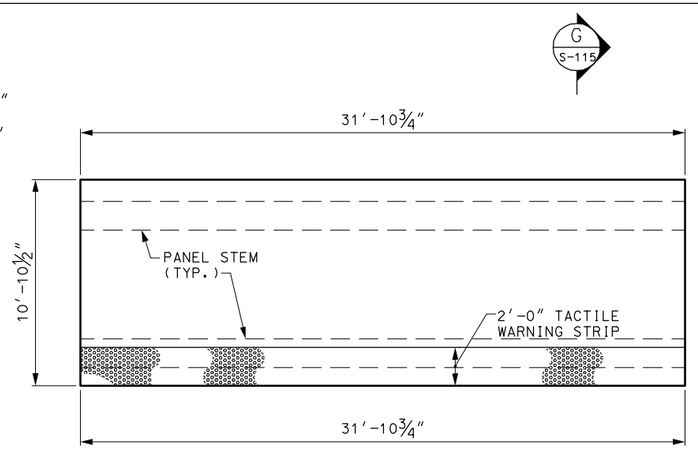

PANEL TYPE J
SCALE: 1/4″ = 1′-0″

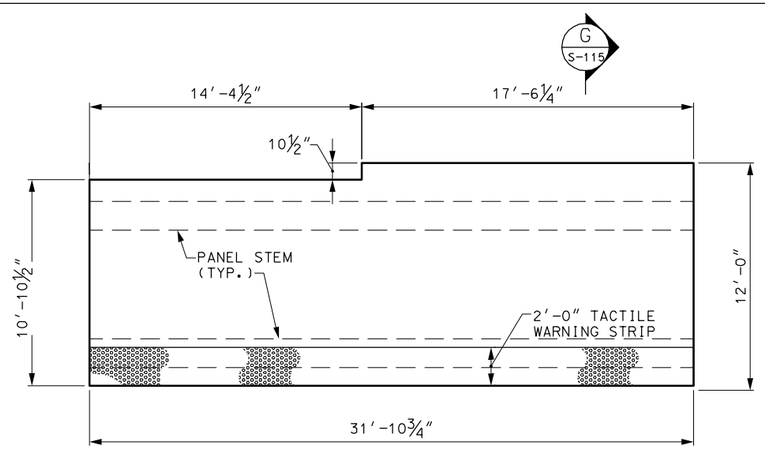

PANEL TYPE K
SCALE: 1/4″ = 1′-0″

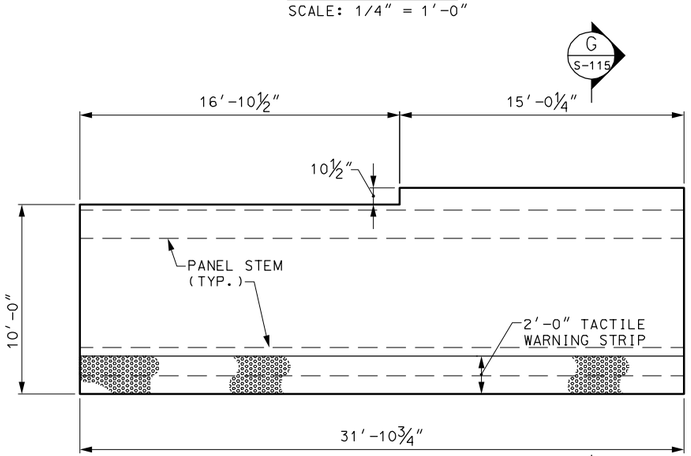

PANEL TYPE L
SCALE: 1/4″ = 1′-0″

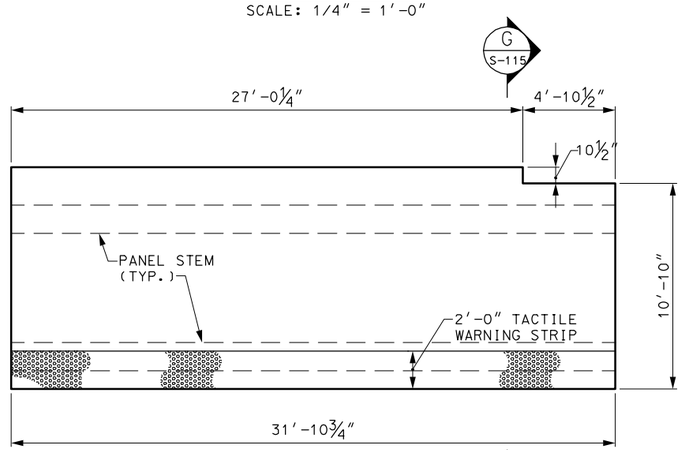

PANEL TYPE M
SCALE: 1/4″ = 1′-0″

NOTES:

1. FOR GENERAL STRUCTURAL NOTES, SEE SHEETS S-100 AND S-101.
2. FOR UTILITY LOCATIONS SEE CIVIL AND ELECTRICAL PLANS.
3. FOR MINIPILE AND PIER CAP DETAILS, SEE SHEETS S-109 THROUGH S-111.
4. PLATFORM PANELS SHALL BE CAMBERED FOR SELFWEIGHT.

90% SUBMITTAL
NOT FOR CONSTRUCTION

FILE NAME: P:\MBTA\2009\E2X37800\CAD\700CADD\702STATIONS\South Acton\Structural\90% Submission\ 112-114_Plot_Dets.dwg
PLOT DATE: Sep 06, 2011 - 10:39am

MASSACHUSETTS BAY TRANSPORTATION AUTHORITY
FITCHBURG COMMUTER RAIL LINE
IMPROVEMENT PROJECT
CONTRACT NO. G67CN01

SOUTH ACTON STATION
PRECAST PLATFORM PANEL DETAILS
SHEET 3

ISSUE	DATE	DESCRIPTION	BY	CHKD.	APP.

HNTB
300 APOLLO DRIVE
CHELMSFORD, MA 01824
(978) 905-4000

PROJECT MANAGER Date

MASSACHUSETTS BAY TRANSPORTATION AUTHORITY
APPROVED BY:
PROJECT MANAGER Date

JACOBS
343 CONGRESS STREET
BOSTON, MA 02110
(617) 242-9222

HORIZ: AS NOTED	DES. BY	DR. BY	CHK. BY	PLAN NO.	ISSUE
VERT: AS NOTED	JAG	JAG	MWT		
DATE: 9/8/11				SHEET S-114	

NOTES:

1. FOR GENERAL STRUCTURAL NOTES, SEE SHEETS S-100 AND S-101.
2. FOR UTILITY LOCATIONS, SEE CIVIL AND ELECTRICAL DRAWINGS.
3. FOR MINIPILE AND PIER CAP DETAILS, SEE SHEET S-109 THROUGH S-111.
4. THE CONTRACTOR SHALL COORDINATE WITH BOTH THE TACTILE WARNING STRIP MANUFACTURER AND THE PRECAST PANEL MANUFACTURER. TO ENSURE THE COMPATIBILITY OF THE TWO PRODUCTS. SUBMIT SHOP DRAWINGS SHOWING A COMPOSITE PRODUCTS OF PRECAST CONCRETE PANELS AND TACTILE WARNING STRIPS TO ENGINEER FOR APPROVAL.
5. TACTILE MANUFACTURER SHALL SUPPLY COMPLETED PANEL TO PRECAST PANEL MANUFACTURER FOR FIT PRIOR TO CASTING PRECAST PANELS.
6. PLATFORM PANELS TO BE CAMBERED FOR SELFWEIGHT.
7. COORDINATE SIZE AND LOCATION OF PENETRATION SLEEVES AND THREADED INSERTS WITH ARCHITECTURAL PLANS.
8. THREADED INSERTS SHALL BE COORDINATED WITH ARCHITECTURAL PLANS, RAILING DETAILS, AND LIGHT POLE MOUNTING DETAILS.

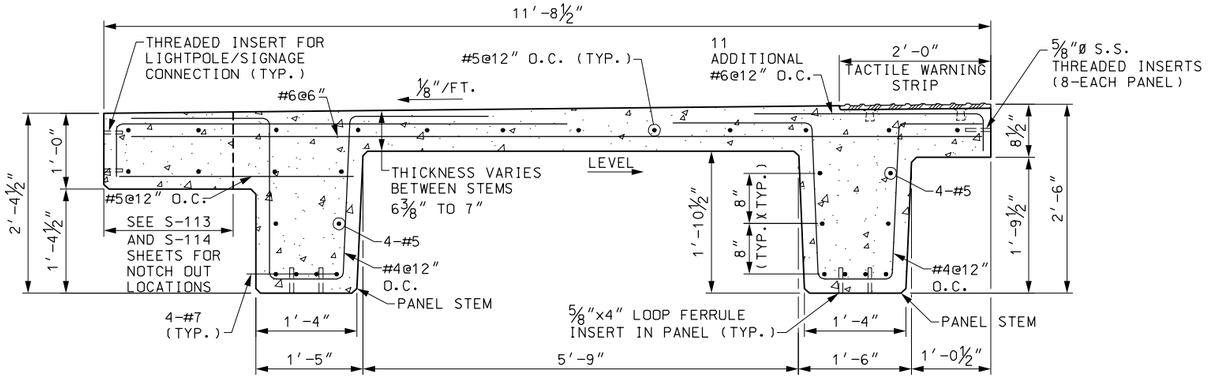

SECTION G G (S-113 / S-114)
SCALE: 1" = 1'-0"

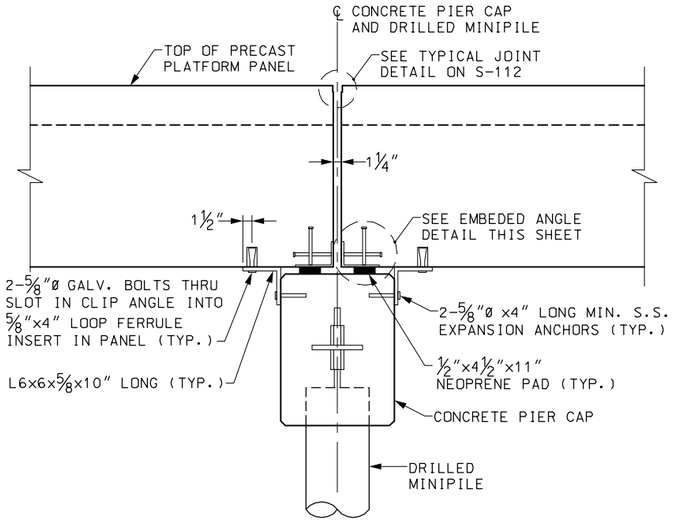

TYPICAL PIER CAP
SCALE: 1" = 1'-0"

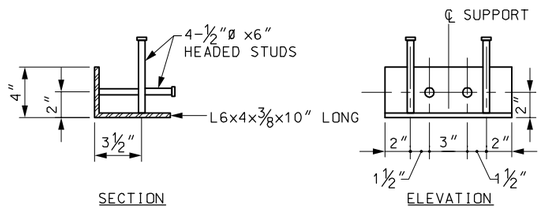

EMBEDED ANGLE DETAIL
SCALE: NTS

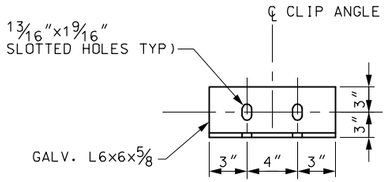

CLIP ANGLE DETAIL
SCALE: NTS

90% SUBMITTAL
NOT FOR CONSTRUCTION

MASSACHUSETTS BAY TRANSPORTATION AUTHORITY
FITCHBURG COMMUTER RAIL LINE IMPROVEMENT PROJECT
CONTRACT NO. G67CN01

SOUTH ACTON STATION
PRECAST PLATFORM PANEL DETAILS
SHEET 4

ISSUE	DATE	DESCRIPTION	BY	CHKD.	APP.

HNTB 300 APOLLO DRIVE CHELMSFORD, MA 01824 (978) 905-4000
PROJECT MANAGER Date

MASSACHUSETTS BAY TRANSPORTATION AUTHORITY
APPROVED BY:
PROJECT MANAGER Date

JACOBS 343 CONGRESS STREET BOSTON, MA 02110 (617) 242-9222

HORIZ: AS NOTED	DES. BY	DR. BY	CHK. BY	PLAN NO.	ISSUE
VERT: AS NOTED	JAG	JAG	MWT		
DATE: 9/8/11				SHEET S-115	

FILE NAME: P:\MBTA\2008\E2X37800\CAD\700CADD\702STATIONS\South Acton\Structural\90% Submission\115_Plat_Secs.dwg
PLOT DATE: Sep 06, 2011 - 10:39am

EAST TO BOSTON

WEST TO FITCHBURG

TOWN OF SOUTH ACTON

NOTES:

1. FOR GENERAL NOTES, SEE SHEETS S-100 AND S-101.
2. FOR PILASTER DETAILS AND FOOTING REINFORCEMENT, SEE FOUNDATION DETAIL SHEETS.
3. (XXX.XX) INDICATES ELEVATION AT TOP OF FOUNDATION WALL AND/OR PILASTER. TOP OF FOUNDATION WALL AND PILASTER ELEVATION SHALL BE 206.67 AT INBOUND AND OUTBOUND HEAD HOUSES UNLESS NOTED OTHERWISE.
4. [XXX.XX] INDICATES ELEVATION AT BOTTOM OF FOOTING.
5. CONTRACTOR SHALL COORDINATE ALL DIMENSIONS, DOOR AND WINDOW SIZES AND LOCATIONS WITH ARCHITECTURAL DRAWINGS.
6. FOR EXISTING AND PROPOSED SITE UTILITIES, SEE UTILITY, CIVIL, AND ELECTRICAL SHEETS.
7. FOR PROPERTY LINES, SEE SHEET C-3.

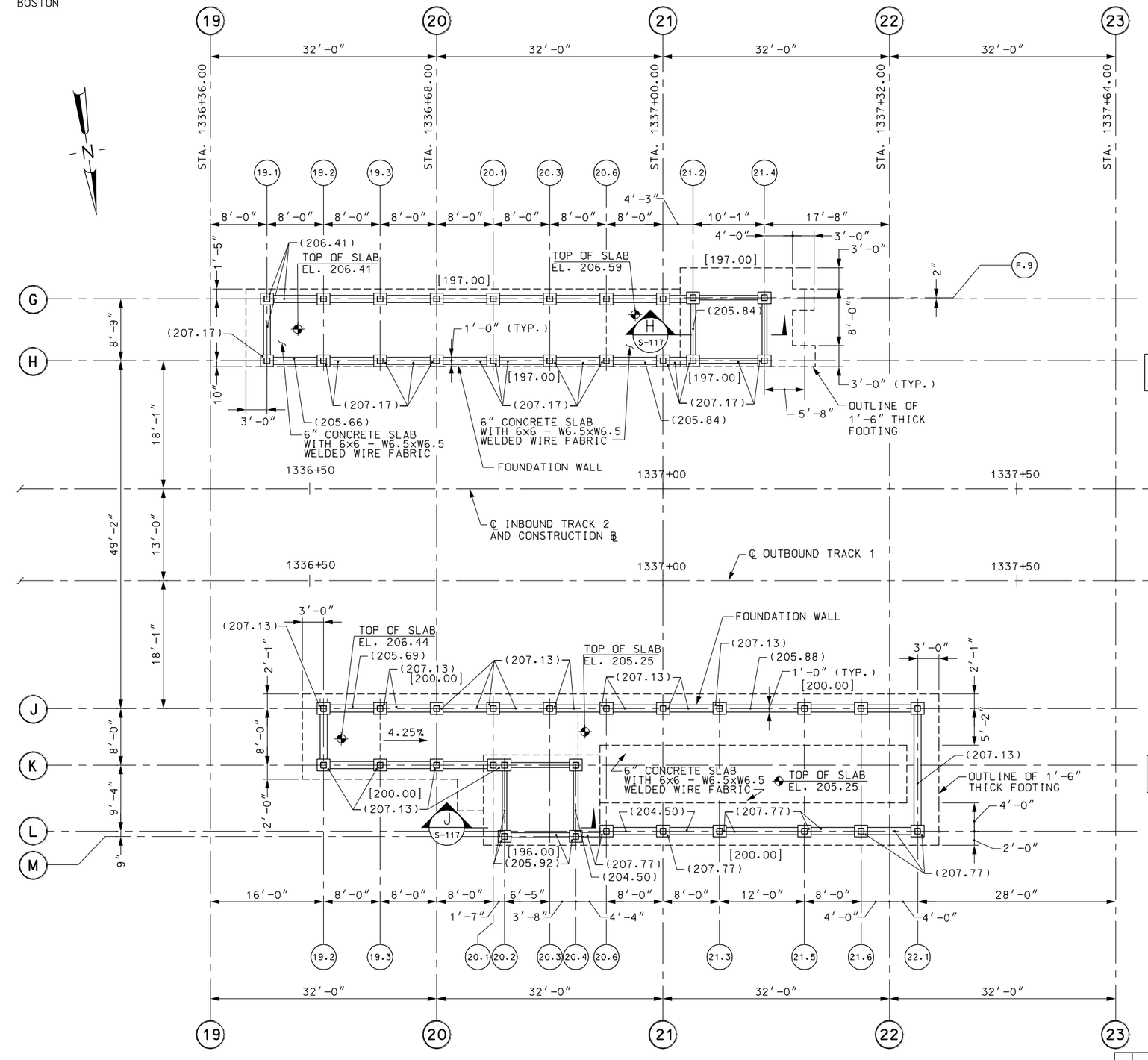

INBOUND HEAD HOUSE

OUTBOUND HEAD HOUSE

FOUNDATION PLAN

SCALE: 1/8″ = 1′-0″

90% SUBMITTAL
NOT FOR CONSTRUCTION

MASSACHUSETTS BAY TRANSPORTATION AUTHORITY

FITCHBURG COMMUTER RAIL LINE
IMPROVEMENT PROJECT
CONTRACT NO. G67CN01

SOUTH ACTON STATION
HEAD HOUSES
FOUNDATION PLAN

ISSUE	DATE	DESCRIPTION	BY	CHK'D.	APP.

HNTB
300 APOLLO DRIVE
CHELMSFORD, MA 01824
(978) 905-4000

PROJECT MANAGER Date

MASSACHUSETTS BAY TRANSPORTATION AUTHORITY

APPROVED BY:

PROJECT MANAGER Date

JACOBS
343 CONGRESS STREET
BOSTON, MA 02110
(617) 242-9222

HORIZ: AS NOTED	DES. BY	DR. BY	CHK. BY	PLAN NO.	ISSUE
VERT: N/A	DJM	DJM	MWT		
DATE: 9/8/11				SHEET S-116	

FILE NAME: P:\MBTA_2009\E2X37800\CAD\700CADD\702STATIONS\South Acton\Structural\90% Submission\ 116_Head_Houses_Foundation_Plan.dwg
PLOT DATE: Sep 06, 2011 – 10:39am

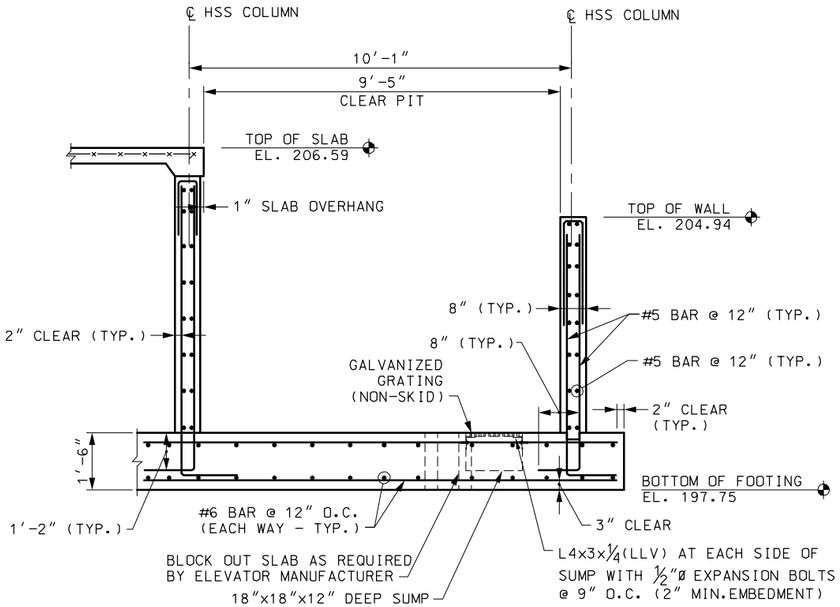

SECTION H
SCALE: 1/2″ = 1′-0″ (S-116)

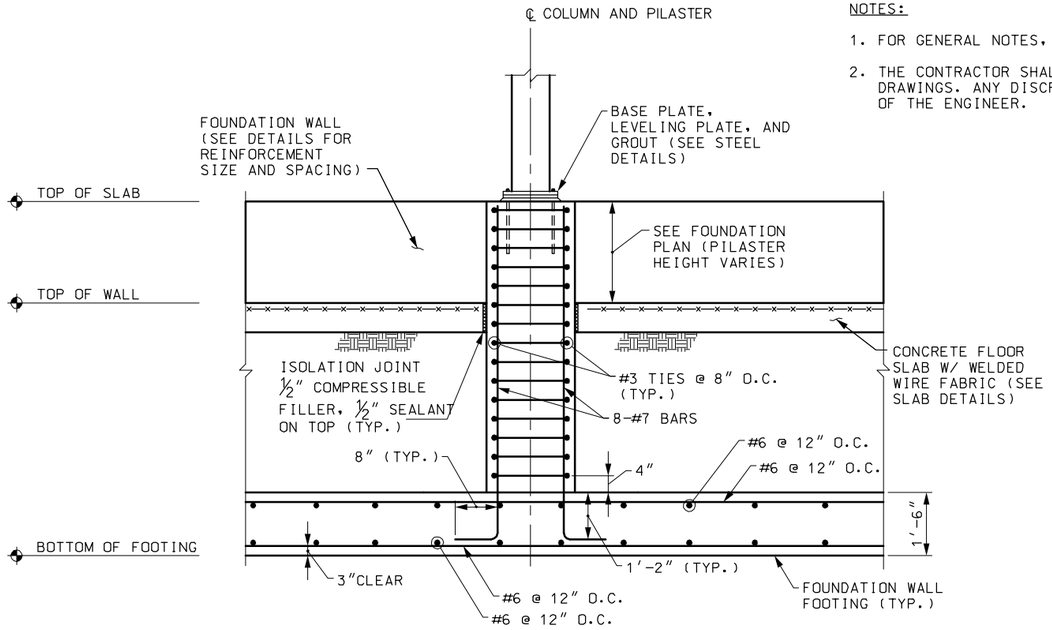

NOTES:

1. FOR GENERAL NOTES, SEE SHEETS S-100 AND S-101.
2. THE CONTRACTOR SHALL COORDINATE STRUCTURAL AND ARCHITECTURAL DRAWINGS. ANY DISCREPANCIES SHALL BE BROUGHT TO THE ATTENTION OF THE ENGINEER.

TYPICAL PILASTER AND FOOTING REINFORCEMENT DETAIL
NOT TO SCALE

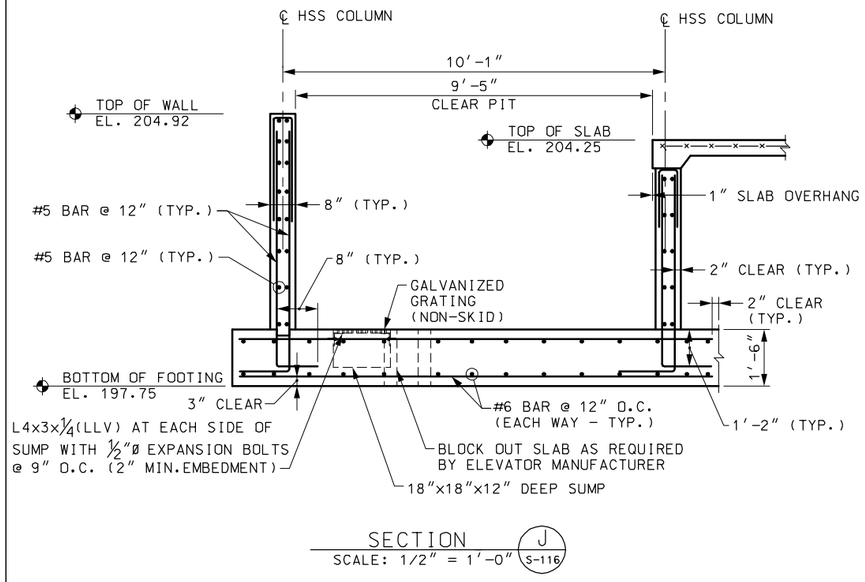

SECTION J
SCALE: 1/2″ = 1′-0″ (S-116)

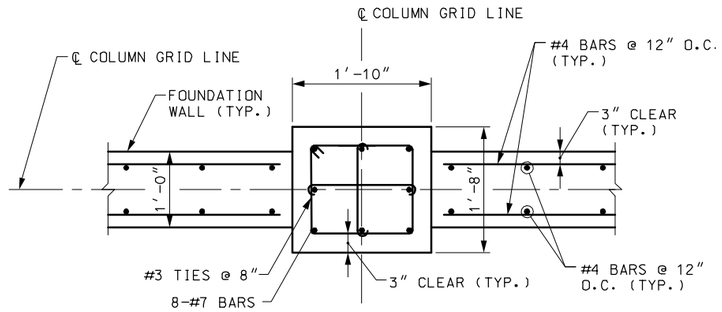

TYPICAL PILASTER AND WALL DETAIL
SCALE: 1″ = 1′-0″

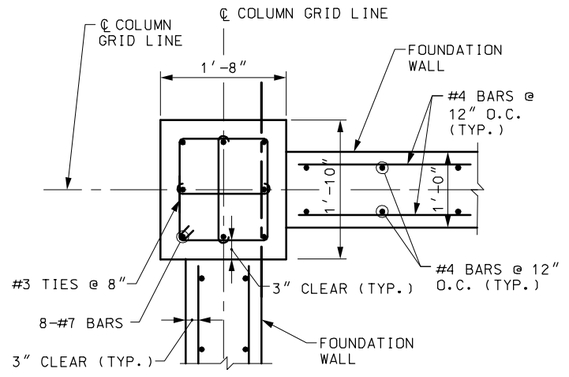

PILASTER AND WALL DETAIL AT CORNERS
SCALE: 1″ = 1′-0″

90% SUBMITTAL
NOT FOR CONSTRUCTION

MASSACHUSETTS BAY TRANSPORTATION AUTHORITY
FITCHBURG COMMUTER RAIL LINE
IMPROVEMENT PROJECT
CONTRACT NO. G67CN01

SOUTH ACTON STATION
HEAD HOUSES FOUNDATION DETAILS
SHEET 1

ISSUE	DATE	DESCRIPTION	BY	CHKD.	APP.

HNTB 300 APOLLO DRIVE CHELMSFORD, MA 01824 (978) 905-4000
PROJECT MANAGER Date

MASSACHUSETTS BAY TRANSPORTATION AUTHORITY
APPROVED BY:
PROJECT MANAGER Date

JACOBS 343 CONGRESS STREET BOSTON, MA 02110 (617) 242-9222

	DES. BY	DR. BY	CHK. BY
HORIZ: AS NOTED	DJM	DJM	
VERT: AS NOTED			
DATE: 9/8/11			

PLAN NO.
SHEET S-117
ISSUE

FILE NAME: P:\MBTA\2008\E2X37800\CAD\700CADD\702STATIONS\South Acton\Structural\90% Submission\117-118_Head_House_Found_Dets.dwg
PLOT DATE: Sep 06, 2011 - 10:39am

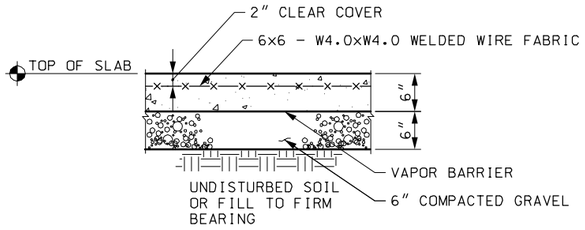

TYPICAL SLAB REINFORCEMENT
SCALE: 1" = 1'-0"

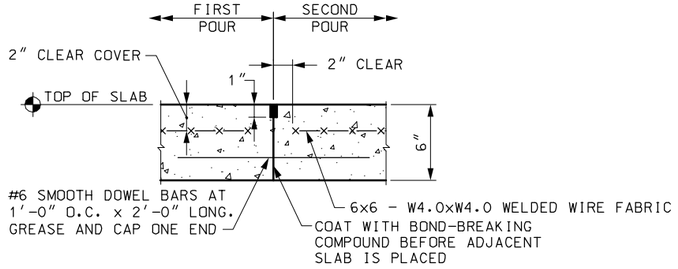

SLAB CONSTRUCTION JOINT DETAIL
NOT TO SCALE

NOTES:

1. FOR GENERAL NOTES, SEE SHEETS S-100 AND S-101.
2. THE CONTRACTOR SHALL COORDINATE STRUCTURAL AND ARCHITECTURAL DRAWINGS. ANY DISCREPANCIES SHALL BE BROUGHT TO THE ATTENTION OF THE ENGINEER.
3. CONSTRUCTION JOINTS SHALL OCCUR AT BUILDING GRID LINES.
4. FOR TOP OF SLAB AND TOP OF PILASTER ELEVATIONS, SEE FOUNDATION PLAN.

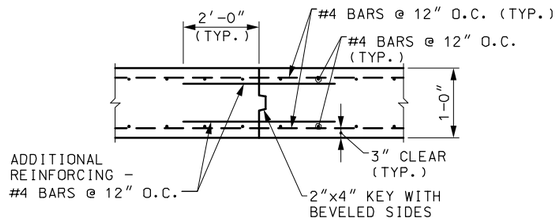

FOUNDATION WALL CONSTRUCTION JOINT DETAIL
NOT TO SCALE

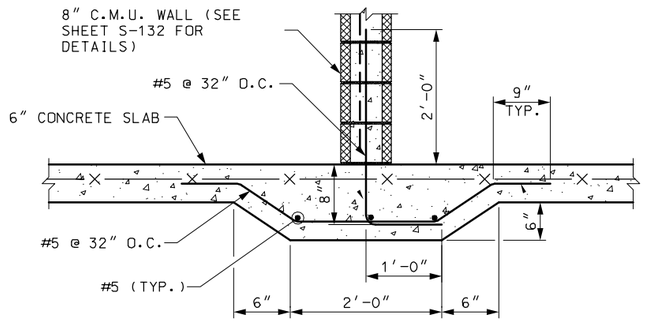

TYPICAL THICKENED CONCRETE SLAB AT MASONRY WALL
NOT TO SCALE

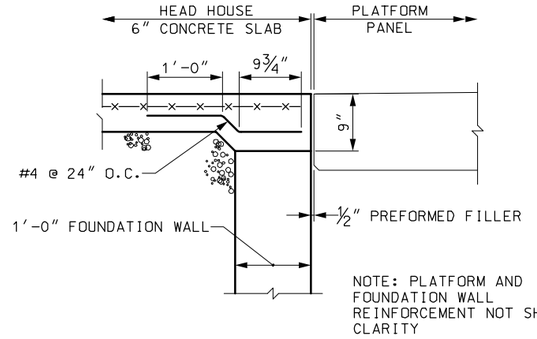

TYPICAL DETAIL AT HEAD HOUSE PLATFORM ENTRANCES
SCALE: 1" = 1'-0"

90% SUBMITTAL
NOT FOR CONSTRUCTION

ISSUE	DATE	DESCRIPTION	BY	CHKD.	APP.

JACOBS
343 CONGRESS STREET
BOSTON, MA 02110
(617) 242-9222

MASSACHUSETTS BAY TRANSPORTATION AUTHORITY

FITCHBURG COMMUTER RAIL LINE
IMPROVEMENT PROJECT
CONTRACT NO. G67CN01

SOUTH ACTON STATION
HEAD HOUSES FOUNDATION DETAILS
SHEET 2

HNTB
300 APOLLO DRIVE
CHELMSFORD, MA 01824
(978) 905-4000

PROJECT MANAGER Date

MASSACHUSETTS BAY TRANSPORTATION AUTHORITY
APPROVED BY:
PROJECT MANAGER Date

HORIZ: AS NOTED	DES. BY	DR. BY	CHK. BY	PLAN NO.	ISSUE
VERT: AS NOTED	DJM	DJM			
DATE: 9/8/11				SHEET S-118	

FILE NAME: P:\MBTA\2008\E2X37800\CAD\700CADD\702STATIONS\South Acton\Structural\90% Submission\ 117-118_Head_House_Found_Dets.dwg
PLOT DATE: Sep 06, 2011 - 10:39am

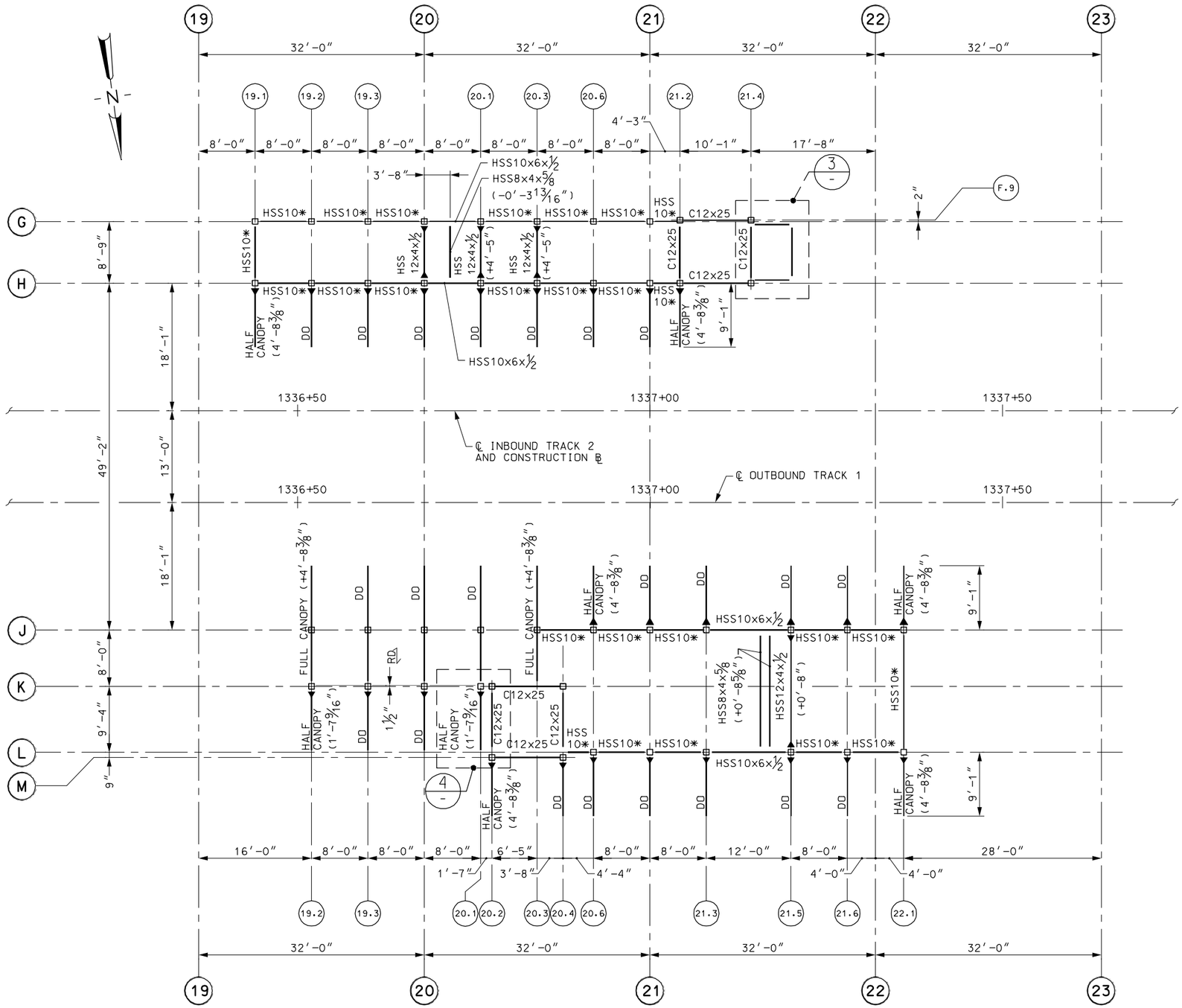

LOWER LEVEL AND LOW ROOF FRAMING PLAN
SCALE: 1/8″ = 1′-0″

NOTES:

1. TOP OF STEEL ELEVATION IS 215.77 UNLESS OTHERWISE NOTED THUS (+/-0′-0″).
2. FOR GENERAL NOTES, SEE SHEET S-100 AND S-101.
3. FOR STEEL DETAILS, SEE SHEET S-133 THRU S-140.
4. FOR FRAME ELEVATIONS, SEE SHEETS S-123 THRU S-127.
5. FOR CANOPY FRAMING AND DETAILS, SEE SHEET S-140 AND SHEETS S-144 THRU S-146.
6. ROOF CONSTRUCTION SHALL BE 1½ INCH DEEP, 18 GAUGE GALVANIZED STEEL DECK.

LEGEND

HSS10* INDICATES HSS10x4x5/16 BEAM (+X′-XX″)

► INDICATES MOMENT CONNECTION

RD INDICATES ROOF DECK DIRECTION

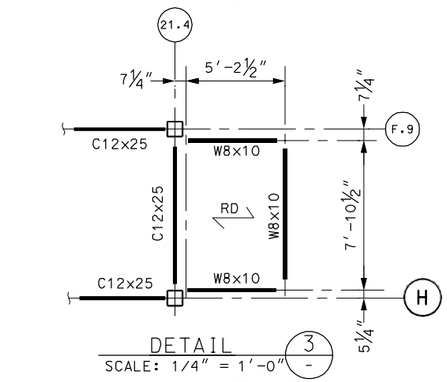

DETAIL 3 -
SCALE: 1/4″ = 1′-0″

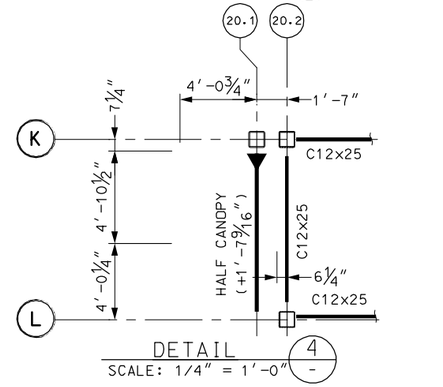

DETAIL 4 -
SCALE: 1/4″ = 1′-0″

90% SUBMITTAL
NOT FOR CONSTRUCTION

MASSACHUSETTS BAY TRANSPORTATION AUTHORITY
FITCHBURG COMMUTER RAIL LINE
IMPROVEMENT PROJECT
CONTRACT NO. G67CN01

SOUTH ACTON STATION HEAD HOUSES LOWER LEVEL AND LOW ROOF FRAMING PLAN

ISSUE	DATE	DESCRIPTION	BY	CHKD.	APP.

HNTB 300 APOLLO DRIVE CHELMSFORD, MA 01824 (978) 905-4000
PROJECT MANAGER Date

MASSACHUSETTS BAY TRANSPORTATION AUTHORITY
APPROVED BY:
PROJECT MANAGER Date

JACOBS 343 CONGRESS STREET BOSTON, MA 02110 (617) 242-9222

	DES. BY	DR. BY	CHK. BY
HORIZ: AS NOTED	DJM	DJM	MWT
VERT: N/A			
DATE: 9/8/11			

PLAN NO.
SHEET S-119
ISSUE

FILE NAME: P:\MBTA\2008\E2X37800\CAD\700CADD\702STATIONS\South Acton\Structural\90% Submission\ 119_Head_Houses_Framing_Plans.dwg
PLOT DATE: Sep 06, 2011 - 10:39am

NOTES:

1. TOP OF STEEL ELEVATION IS 222.09 UNLESS OTHERWISE NOTED THUS (+/-0'-0").
2. FOR GENERAL NOTES, SEE SHEETS S-100 AND S-101.
3. FOR STEEL DETAILS, SEE SHEETS S-133 THRU S-140.
4. FOR FRAME ELEVATIONS, SEE SHEETS S-123 THRU S-127.

LEGEND

**	INDICATES HSS6x6x½ BEAM
HSS10*	INDICATES HSS10x4x5/16 BEAM (+1'-10⅛")
▶—	INDICATES MOMENT CONNECTION
RD	INDICATES ROOF DECK DIRECTION

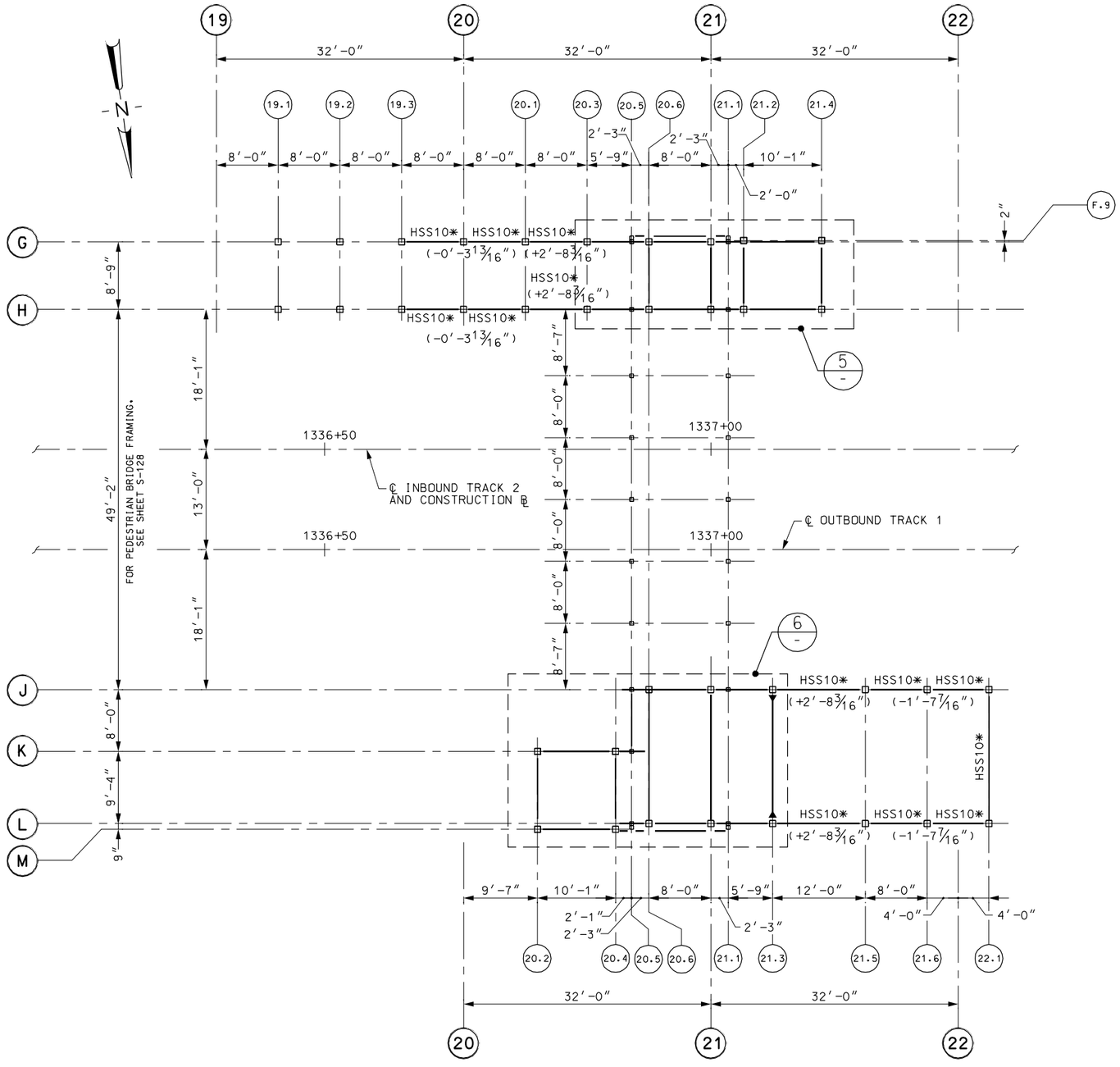

SECOND FLOOR FRAMING PLAN
SCALE: 1/8" = 1'-0"

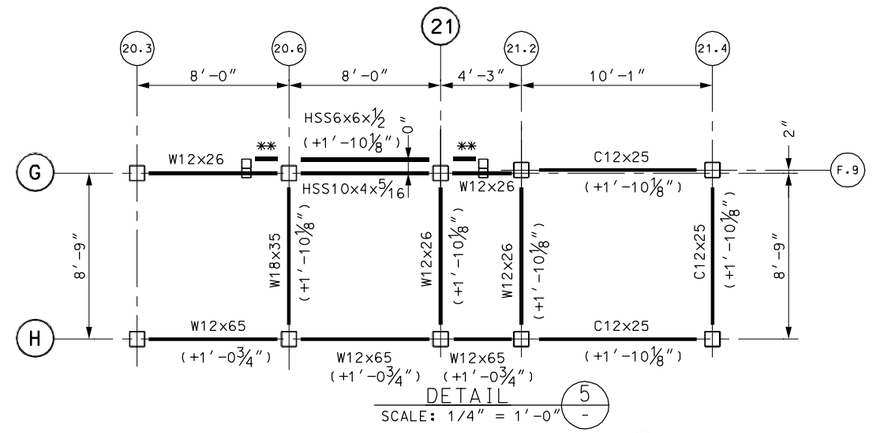

DETAIL
SCALE: 1/4" = 1'-0"
5
-

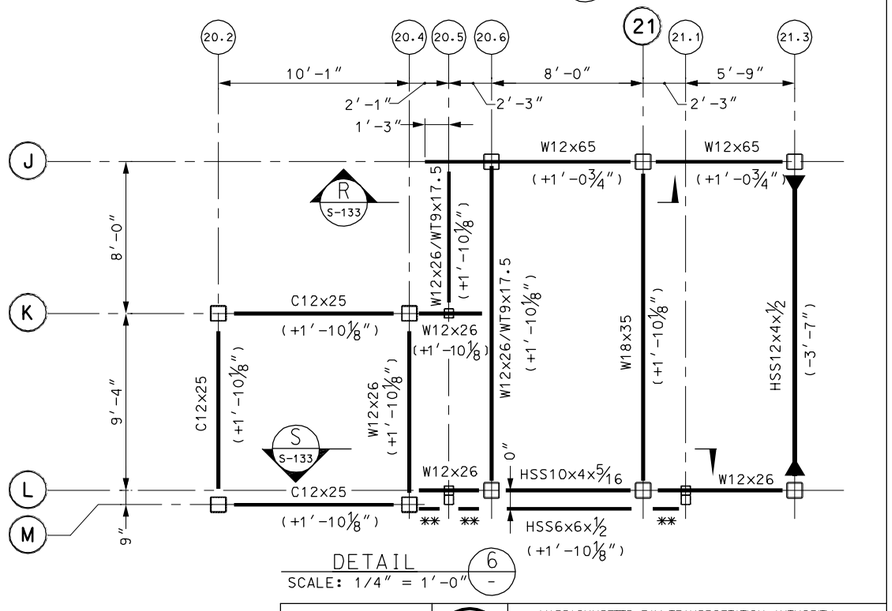

DETAIL
SCALE: 1/4" = 1'-0"
6
-

90% SUBMITTAL
NOT FOR CONSTRUCTION

MASSACHUSETTS BAY TRANSPORTATION AUTHORITY

FITCHBURG COMMUTER RAIL LINE
IMPROVEMENT PROJECT
CONTRACT NO. G67CN01

SOUTH ACTON STATION
HEAD HOUSES SECOND FLOOR FRAMING PLAN

ISSUE	DATE	DESCRIPTION	BY	CHKD.	APP.

HNTB 300 APOLLO DRIVE CHELMSFORD, MA 01824 (978) 905-4000
PROJECT MANAGER Date

MASSACHUSETTS BAY TRANSPORTATION AUTHORITY
APPROVED BY:
PROJECT MANAGER Date

JACOBS 343 CONGRESS STREET BOSTON, MA 02110 (617) 242-9222

HORIZ: AS NOTED	DES. BY	DR. BY	CHK. BY	PLAN NO.	ISSUE
VERT: N/A	DJM	DJM	MWT		
DATE: 9/8/11				SHEET S-120	

FILE NAME: P:\MBTA\2009\E22X37800\CAD\700CADD\702STATIONS\South Acton\Structural\90% Submission\120-122_Head_Houses_Framing_Plans.dwg
PLOT DATE: Sep 06, 2011 - 10:39am

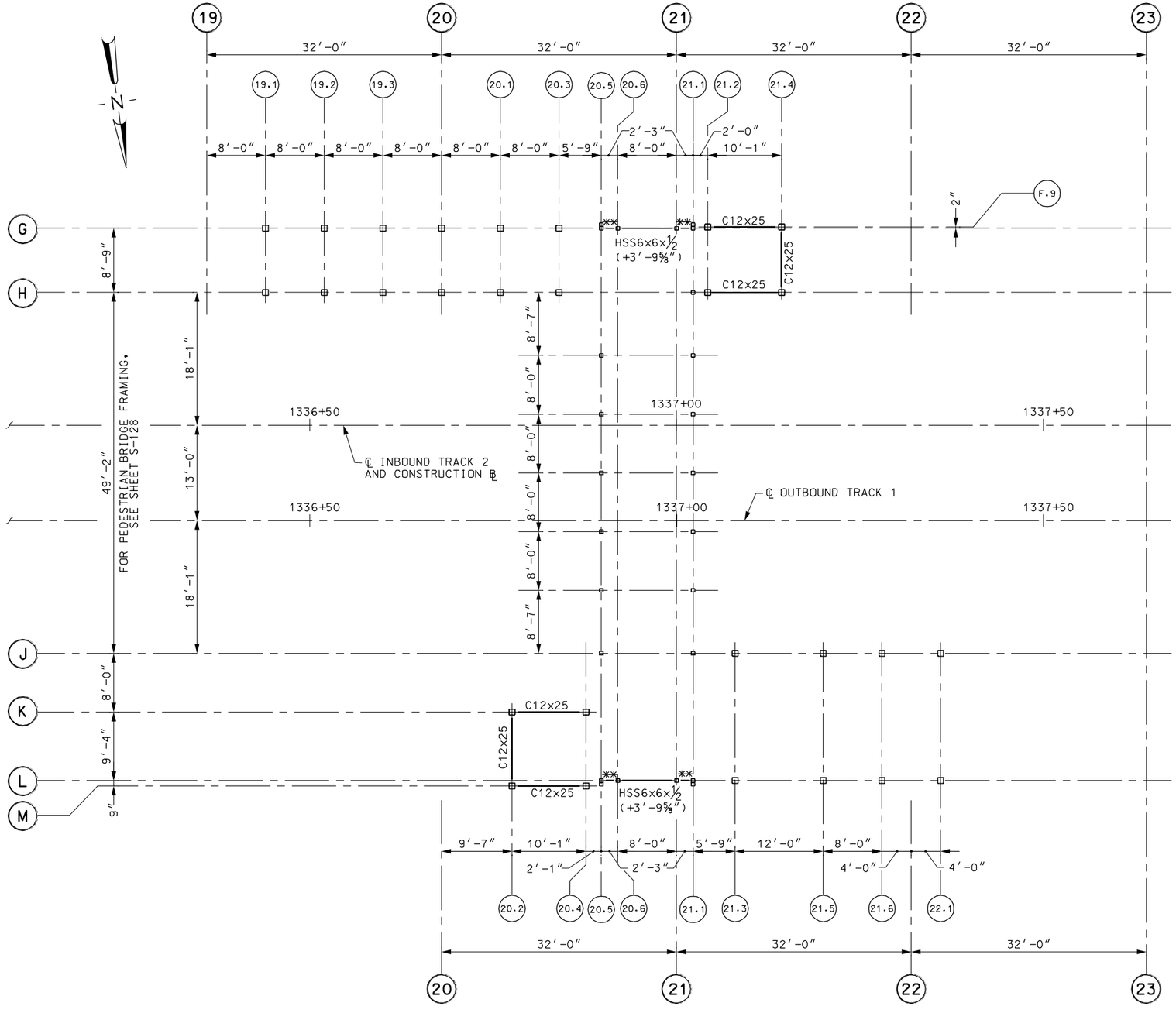

NOTES:

1. TOP OF STEEL ELEVATION IS 232.59 UNLESS OTHERWISE NOTED THUS (+/-0′-0″).
2. FOR GENERAL NOTES, SEE SHEETS S-100 AND S-101.
3. FOR STEEL DETAILS, SEE SHEET S-133 THRU S-140.
4. FOR FRAME ELEVATIONS, SEE SHEETS S-123 THRU S-127.
5. ✱ INDICATES HSS6x6x½ BEAM (+2′-10 13/16″).

LEGEND

** INDICATES HSS6x6x½ BEAM

INDICATES MOMENT CONNECTION

UPPER LEVEL FRAMING PLAN
SCALE: 1/8″ = 1′-0″

90% SUBMITTAL
NOT FOR CONSTRUCTION

ISSUE	DATE	DESCRIPTION	BY	CHKD.	APP.

JACOBS 343 CONGRESS STREET BOSTON, MA 02110 (617) 242-9222

HNTB 300 APOLLO DRIVE CHELMSFORD, MA 01824 (978) 905-4000

PROJECT MANAGER Date

MASSACHUSETTS BAY TRANSPORTATION AUTHORITY

APPROVED BY:

PROJECT MANAGER Date

MASSACHUSETTS BAY TRANSPORTATION AUTHORITY

FITCHBURG COMMUTER RAIL LINE
IMPROVEMENT PROJECT
CONTRACT NO. G67CN01

SOUTH ACTON STATION
HEAD HOUSES UPPER LEVEL FRAMING PLAN

HORIZ: AS NOTED	DES. BY	DR. BY	CHK. BY	PLAN NO.	ISSUE
VERT: N/A	DJM	DJM	MWT		
DATE: 9/8/11				SHEET S-121	

FILE NAME: P:\MBTA\2008\E2X37800\CAD\700CADD\702STATIONS\South Acton\Structural\90% Submission\ 120-122_Head_Houses_Framing_Plans.dwg
PLOT DATE: Sep 06, 2011 - 10:39am

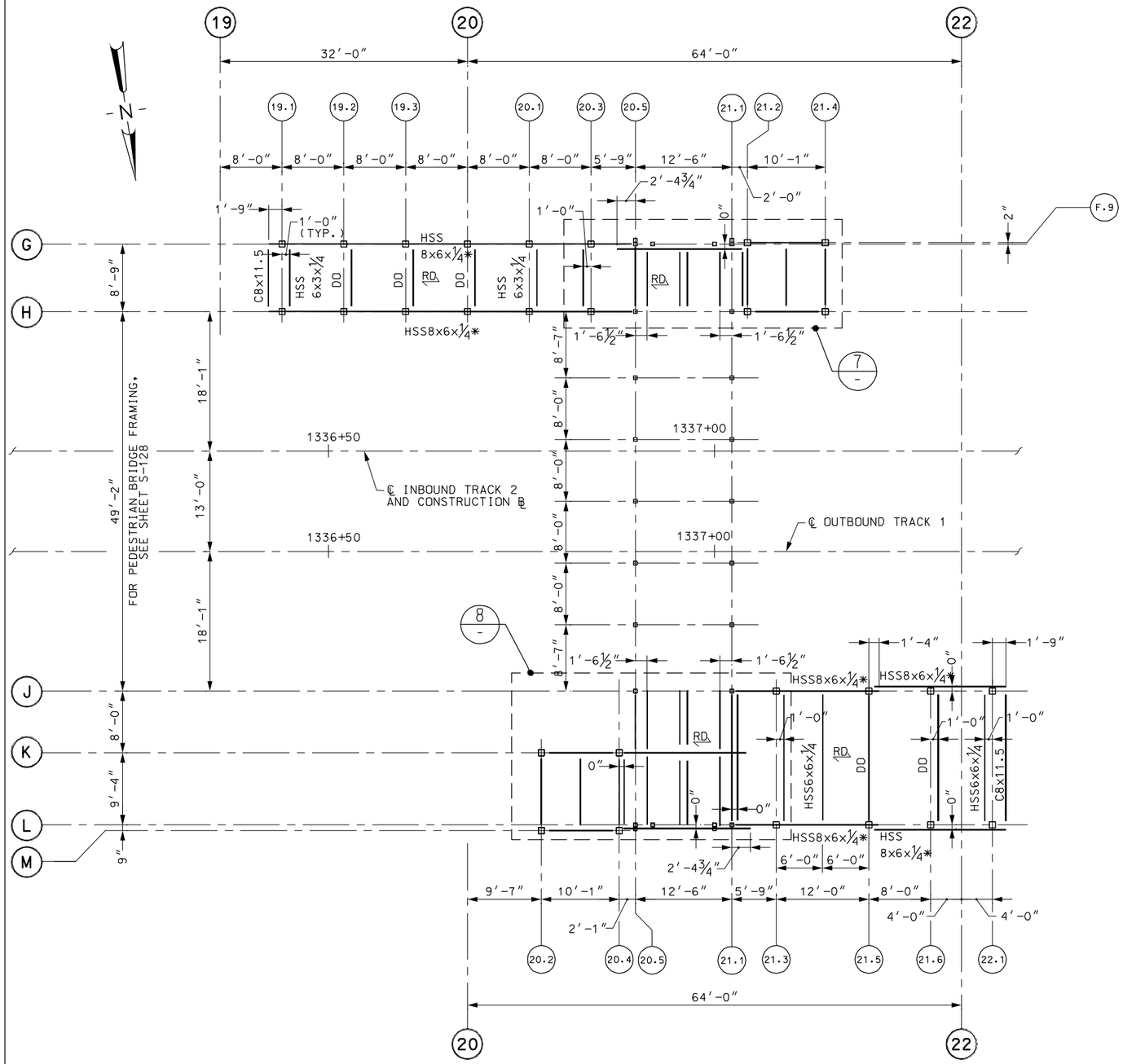

HIGH ROOF FRAMING PLAN
SCALE: 1/4" = 1'-0"

NOTES:

1. TOP OF STEEL ELEVATION IS 239.91 UNLESS OTHERWISE NOTED THUS (+/-0'-0").
2. FOR GENERAL NOTES, SEE SHEET S-100.
3. GUTTER STEEL CHANNEL BEAMS NOT SHOWN FOR CLARITY.
4. FOR STEEL DETAILS, SEE SHEET S-133 THRU S-140.
5. FOR FRAME ELEVATIONS, SEE SHEETS S-123 THRU S-127.
6. ROOF CONSTRUCTION SHALL BE 1½" INCH DEEP, 18 GAUGE GALVANIZED STEEL DECK.

LEGEND

RD. INDICATES ROOF DECK DIRECTION

* SLOPED BEAM (SEE FRAME ELEVATION SHEETS FOR TOP OF BEAM)

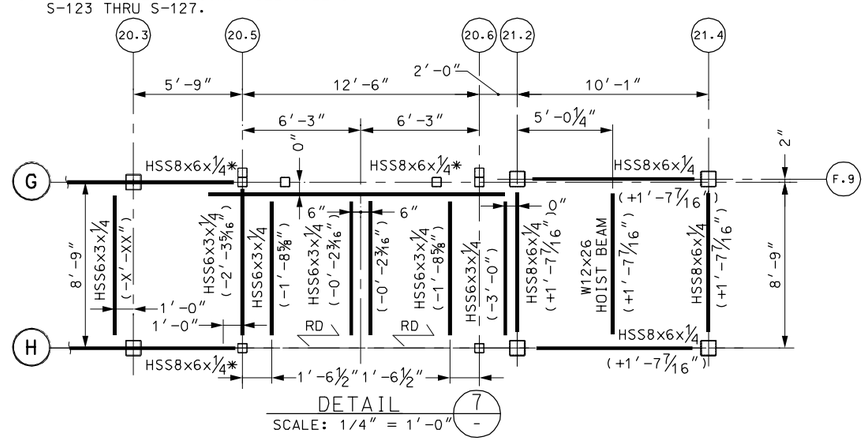

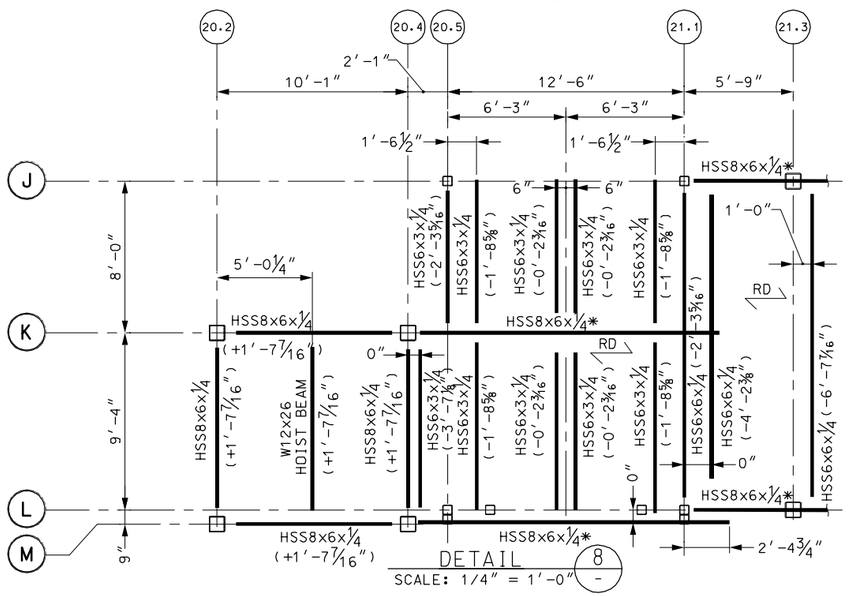

90% SUBMITTAL
NOT FOR CONSTRUCTION

MASSACHUSETTS BAY TRANSPORTATION AUTHORITY

FITCHBURG COMMUTER RAIL LINE IMPROVEMENT PROJECT
CONTRACT NO. G67CN01

SOUTH ACTON STATION
HEAD HOUSES HIGH ROOF FRAMING PLAN

ISSUE	DATE	DESCRIPTION	BY	CHKD.	APP.

HNTB
300 APOLLO DRIVE
CHELMSFORD, MA 01824
(978) 905-4000

PROJECT MANAGER Date

MASSACHUSETTS BAY TRANSPORTATION AUTHORITY
APPROVED BY:
PROJECT MANAGER Date

JACOBS
343 CONGRESS STREET
BOSTON, MA 02110
(617) 242-9222

HORIZ: AS NOTED	DES. BY	DR. BY	CHK. BY	PLAN NO.	ISSUE
VERT: N/A	DJM	DJM	MWT		
DATE: 9/8/11				SHEET S-122	

FILE NAME: P:\MBTA\2008\E2X37800\CAD\700CADD\702STATIONS\South Acton\Structural\90% Submission\ 120-122_Head_Houses_Framing_Plans.dwg
PLOT DATE: Sep 06, 2011 - 10:39am

NOTES:

1. FOR GENERAL NOTES, SEE SHEET S-100.
2. FOR STEEL DETAILS, SEE SHEETS S-133 THRU S-140.

LEGEND

** INDICATES HSS6x6x½ BEAM

HSS10* INDICATES HSS10x4x5/16 BEAM

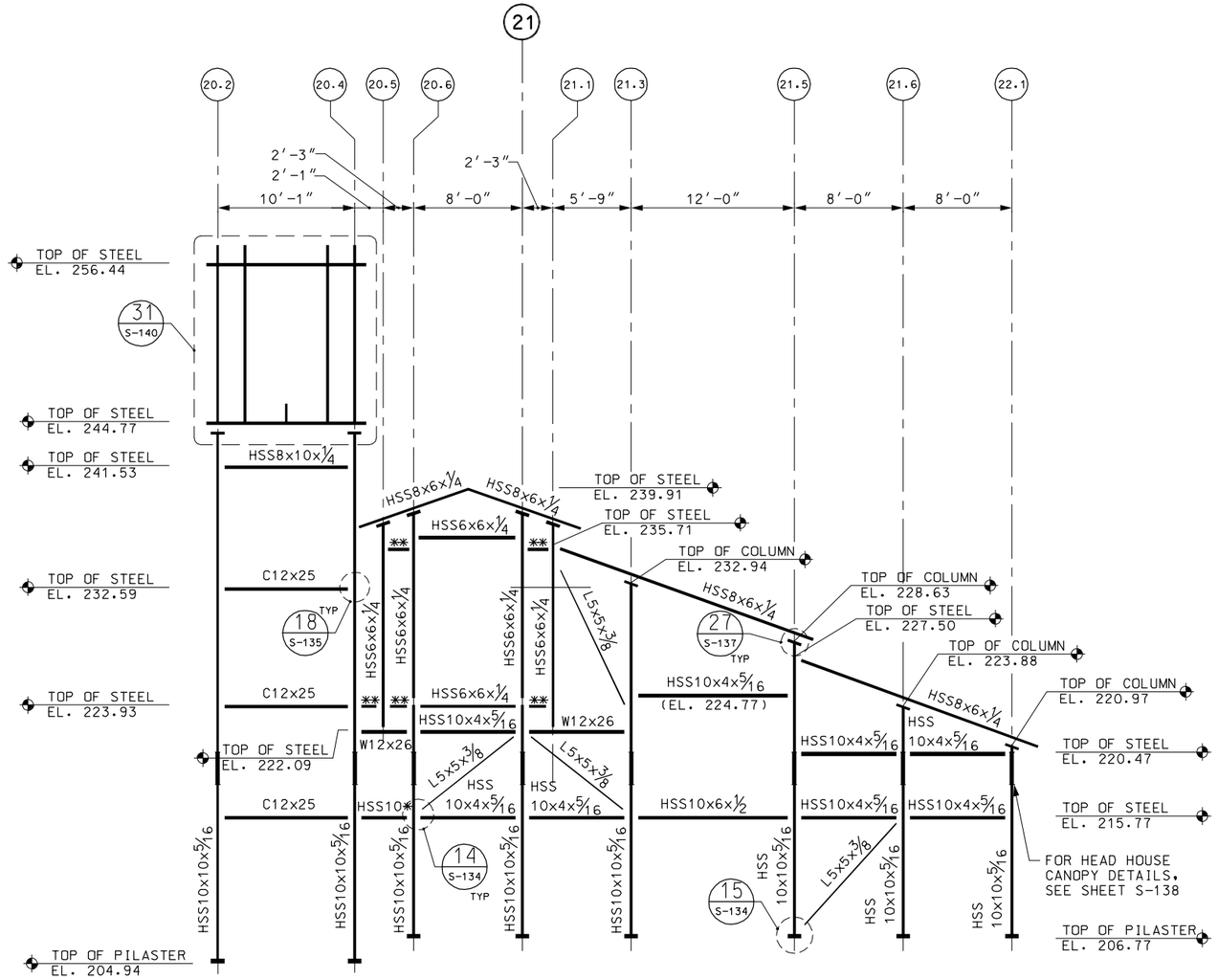

FRAME ELEVATION AT COLUMN LINES L AND M

SCALE: 3/16" = 1'-0"

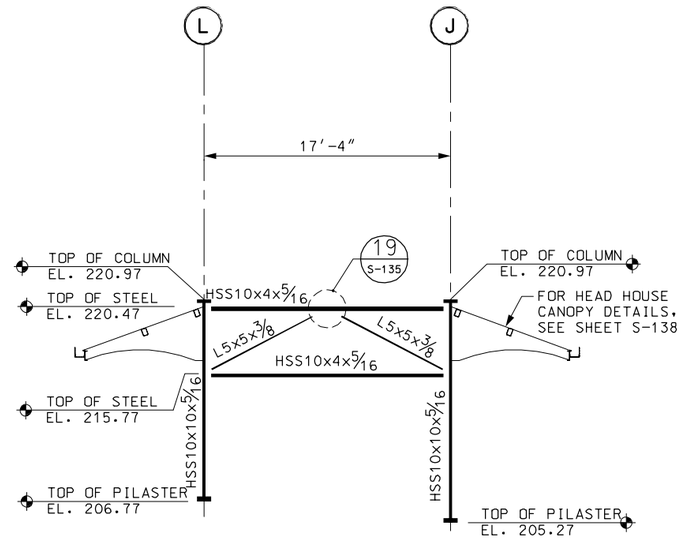

FRAME ELEVATION AT COLUMN LINE 22.1

SCALE: 3/16" = 1'-0"

90% SUBMITTAL
NOT FOR CONSTRUCTION

MASSACHUSETTS BAY TRANSPORTATION AUTHORITY

FITCHBURG COMMUTER RAIL LINE IMPROVEMENT PROJECT CONTRACT NO. G67CN01

SOUTH ACTON STATION
HEAD HOUSES FRAME ELEVATIONS
SHEET 1

ISSUE	DATE	DESCRIPTION	BY	CHKD.	APP.

HNTB 300 APOLLO DRIVE CHELMSFORD, MA 01824 (978) 905-4000

PROJECT MANAGER Date

MASSACHUSETTS BAY TRANSPORTATION AUTHORITY

APPROVED BY:

PROJECT MANAGER Date

JACOBS 343 CONGRESS STREET BOSTON, MA 02110 (617) 242-9222

HORIZ: AS NOTED	DES. BY	DR. BY	CHK. BY	PLAN NO.	ISSUE
VERT: AS NOTED	DJM	DJM	MWT		
DATE: 9/8/11				SHEET S-123	

FILE NAME: P:\MBTA\2008\E2X37800\CAD\700CADD\702STATIONS\South Acton\Structural\90% Submission\123-127_Head_Houses_Frame_Elevations.dwg
PLOT DATE: Sep 06, 2011 - 10:40am

NOTES:

1. FOR GENERAL NOTES, SEE SHEET S-100.
2. FOR STEEL DETAILS, SEE SHEETS S-133 THRU S-140.

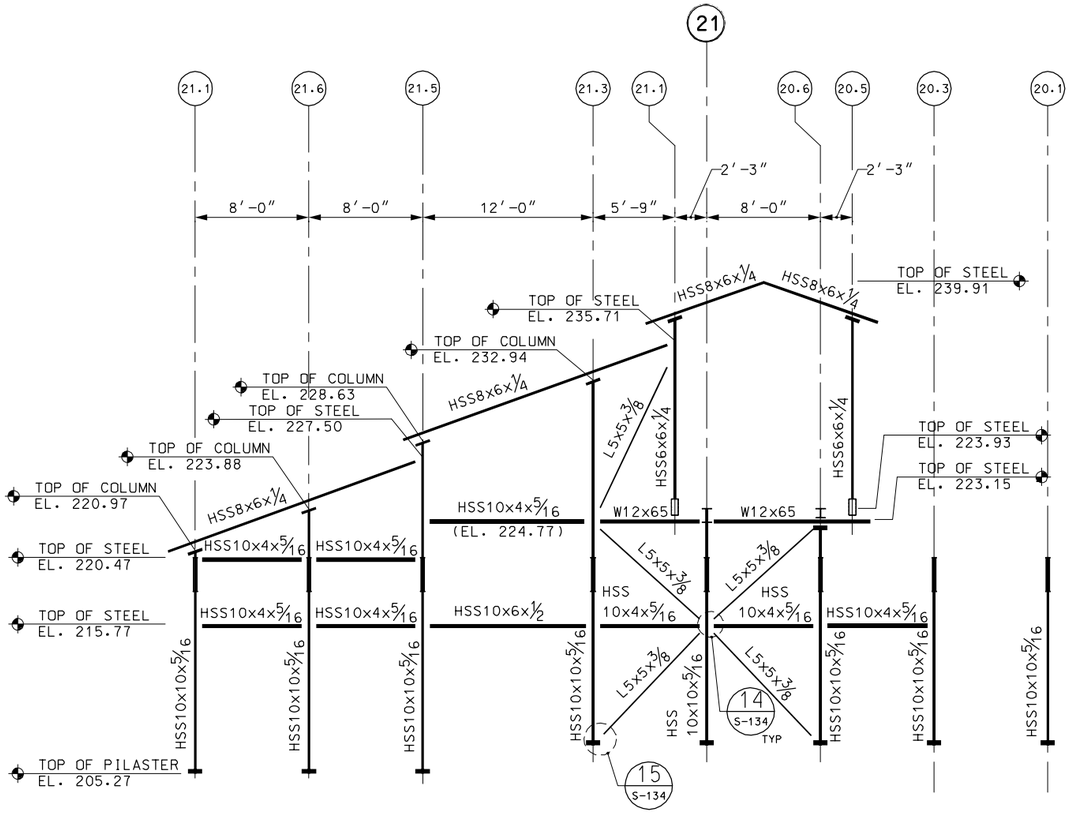

FRAME ELEVATION AT COLUMN LINE J
SCALE: 3/16″ = 1′-0″

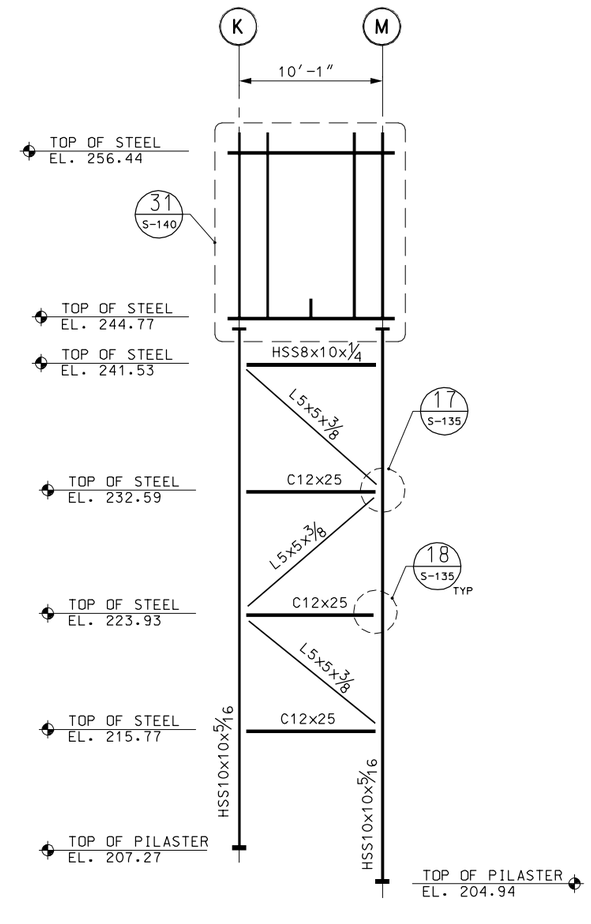

FRAME ELEVATION AT COLUMN LINE 20.2
SCALE: 3/16″ = 1′-0″

90% SUBMITTAL
NOT FOR CONSTRUCTION

ISSUE	DATE	DESCRIPTION	BY	CHKD.	APP.

JACOBS 343 CONGRESS STREET BOSTON, MA 02110 (617) 242-9222

MASSACHUSETTS BAY TRANSPORTATION AUTHORITY

FITCHBURG COMMUTER RAIL LINE
IMPROVEMENT PROJECT
CONTRACT NO. G67CN01

SOUTH ACTON STATION
HEAD HOUSES FRAME ELEVATIONS
SHEET 2

HNTB 300 APOLLO DRIVE CHELMSFORD, MA 01824 (978) 905-4000

PROJECT MANAGER Date

MASSACHUSETTS BAY TRANSPORTATION AUTHORITY
APPROVED BY:
PROJECT MANAGER Date

HORIZ: AS NOTED	DES. BY	DR. BY	CHK. BY	PLAN NO.	ISSUE
VERT: AS NOTED	DJM	DJM	MWT		
DATE: 9/8/11				SHEET S-124	

FILE NAME: P:\MBTA\2009\E22X37800\CAD\700CADD\702STATIONS\South Acton\Structural\90% Submission\ 123-127_Head_Houses_Frame_Elevations.dwg
PLOT DATE: Sep 06, 2011 - 10:40am

NOTES:

1. FOR GENERAL NOTES, SEE SHEET S-100.
2. FOR STEEL DETAILS, SEE SHEETS S-133 THRU S-140.

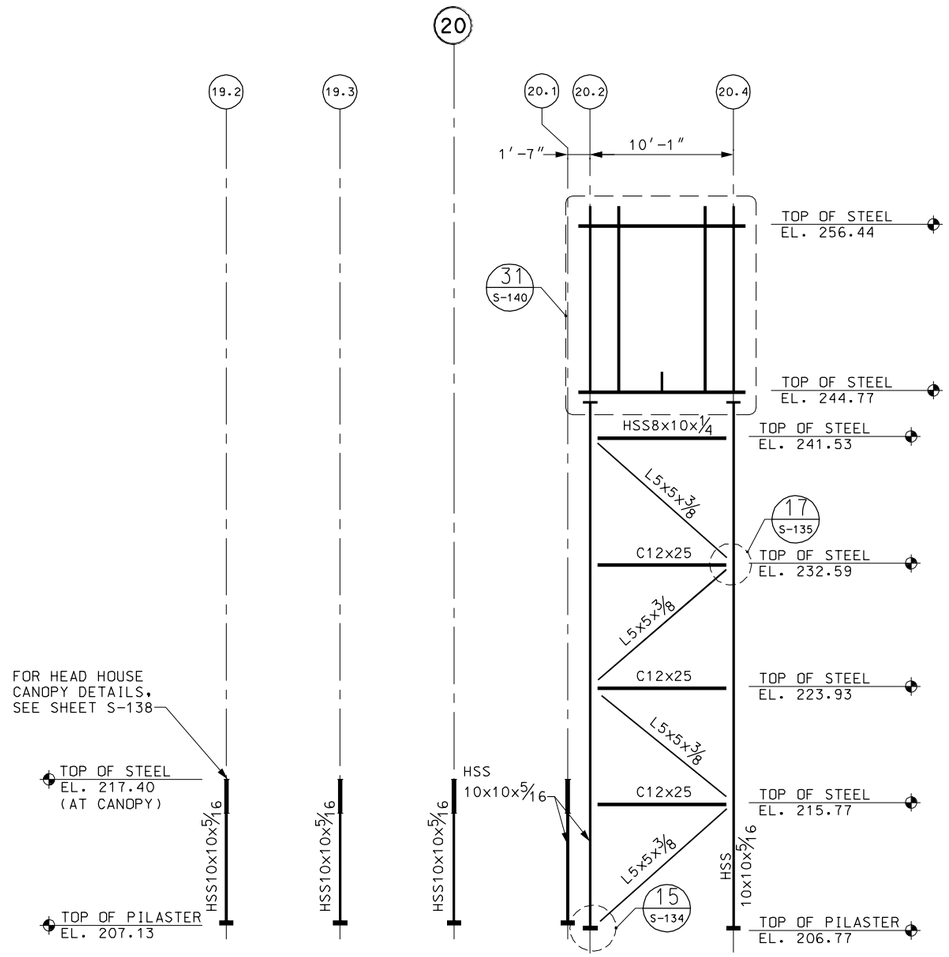

FRAME ELEVATION AT COLUMN LINE K
SCALE: 3/16" = 1'-0"

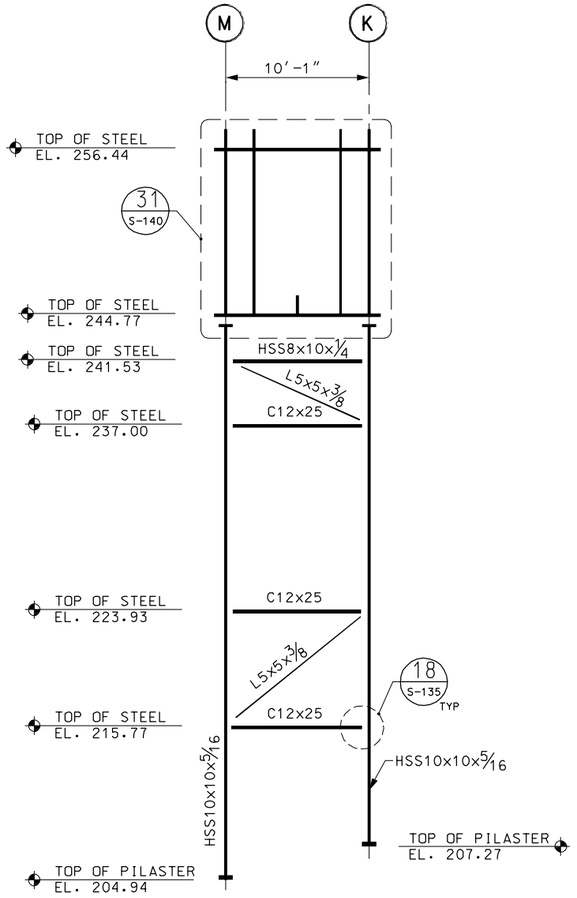

FRAME ELEVATION AT COLUMN LINE 20.4
SCALE: 3/16" = 1'-0"

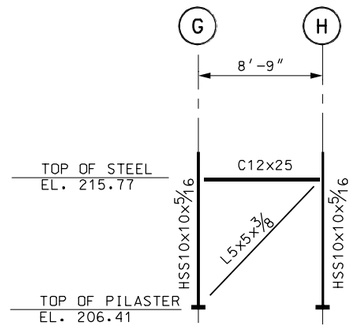

FRAME ELEVATION AT COLUMN LINE 19.1
SCALE: 3/16" = 1'-0"

90% SUBMITTAL
NOT FOR CONSTRUCTION

MASSACHUSETTS BAY TRANSPORTATION AUTHORITY

FITCHBURG COMMUTER RAIL LINE
IMPROVEMENT PROJECT
CONTRACT NO. G67CN01

SOUTH ACTON STATION
HEAD HOUSES FRAME ELEVATIONS
SHEET 3

ISSUE	DATE	DESCRIPTION	BY	CHKD.	APP.

HNTB
300 APOLLO DRIVE
CHELMSFORD, MA 01824
(978) 905-4000

JACOBS
343 CONGRESS STREET
BOSTON, MA 02110
(617) 242-9222

MASSACHUSETTS BAY TRANSPORTATION AUTHORITY
APPROVED BY:
PROJECT MANAGER Date
PROJECT MANAGER Date

HORIZ: AS NOTED	DES. BY	DR. BY	CHK. BY	PLAN NO.	ISSUE
VERT: AS NOTED	DJM	DJM	MWT		
DATE: 9/8/11				SHEET S-125	

FILE NAME: P:\MBTA\2008\E2X37800\CAD\700CADD\702STATIONS\South Acton\Structural\90% Submission\ 123-127_Head_Houses_Frame_Elevations.dwg
PLOT DATE: Sep 06, 2011 - 10:40am

NOTES:

1. FOR GENERAL NOTES, SEE SHEET S-100.
2. FOR STEEL DETAILS, SEE SHEETS S-133 THRU S-140.

LEGEND

** INDICATES HSS6x6x½ BEAM

HSS10* INDICATES HSS10x4x5/16 BEAM

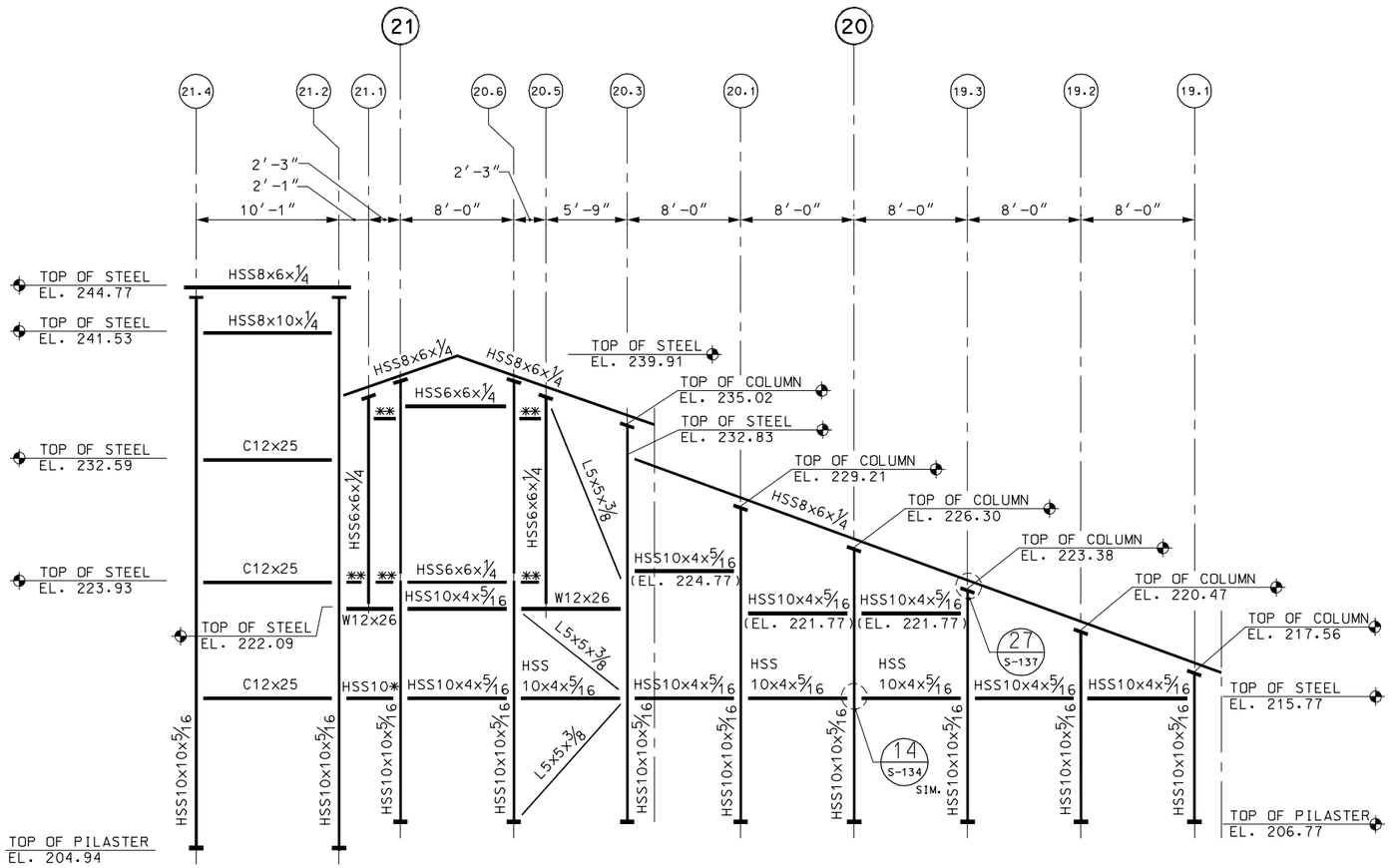

FRAME ELEVATION AT COLUMN LINES F.9 AND G

SCALE: 3/16" = 1'-0"

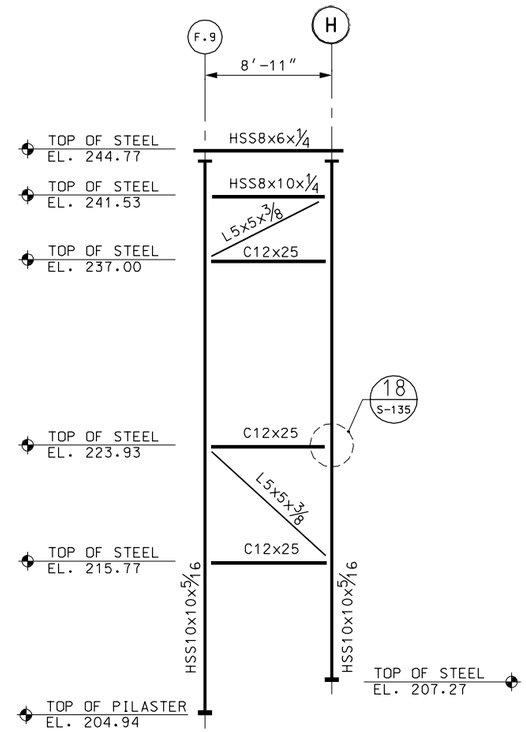

FRAME ELEVATION AT COLUMN LINE 21.2

SCALE: 3/16" = 1'-0"

90% SUBMITTAL
NOT FOR CONSTRUCTION

MASSACHUSETTS BAY TRANSPORTATION AUTHORITY

FITCHBURG COMMUTER RAIL LINE IMPROVEMENT PROJECT CONTRACT NO. G67CN01

SOUTH ACTON STATION HEAD HOUSES FRAME ELEVATIONS SHEET 4

ISSUE	DATE	DESCRIPTION	BY	CHKD.	APP.

HNTB 300 APOLLO DRIVE CHELMSFORD, MA 01824 (978) 905-4000

PROJECT MANAGER Date

MASSACHUSETTS BAY TRANSPORTATION AUTHORITY

APPROVED BY:

PROJECT MANAGER Date

JACOBS 343 CONGRESS STREET BOSTON, MA 02110 (617) 242-9222

HORIZ: AS NOTED	DES. BY	DR. BY	CHK. BY	PLAN NO.	ISSUE
VERT: AS NOTED	DJM	DJM			
DATE: 9/8/11				SHEET S-126	

FILE NAME: P:\MBTA\2009\E2X37800\CAD\700CADD\702STATIONS\South Acton\Structural\90% Submission\ 123-127_Head_Houses_Frame_Elevations.dwg
PLOT DATE: Sep 06, 2011 - 10:40am

NOTES:

1. FOR GENERAL NOTES, SEE SHEET S-100.
2. FOR STEEL DETAILS, SEE SHEETS S-133 THRU S-140.

LEGEND

HSS10* INDICATES HSS10x4x5/16 BEAM

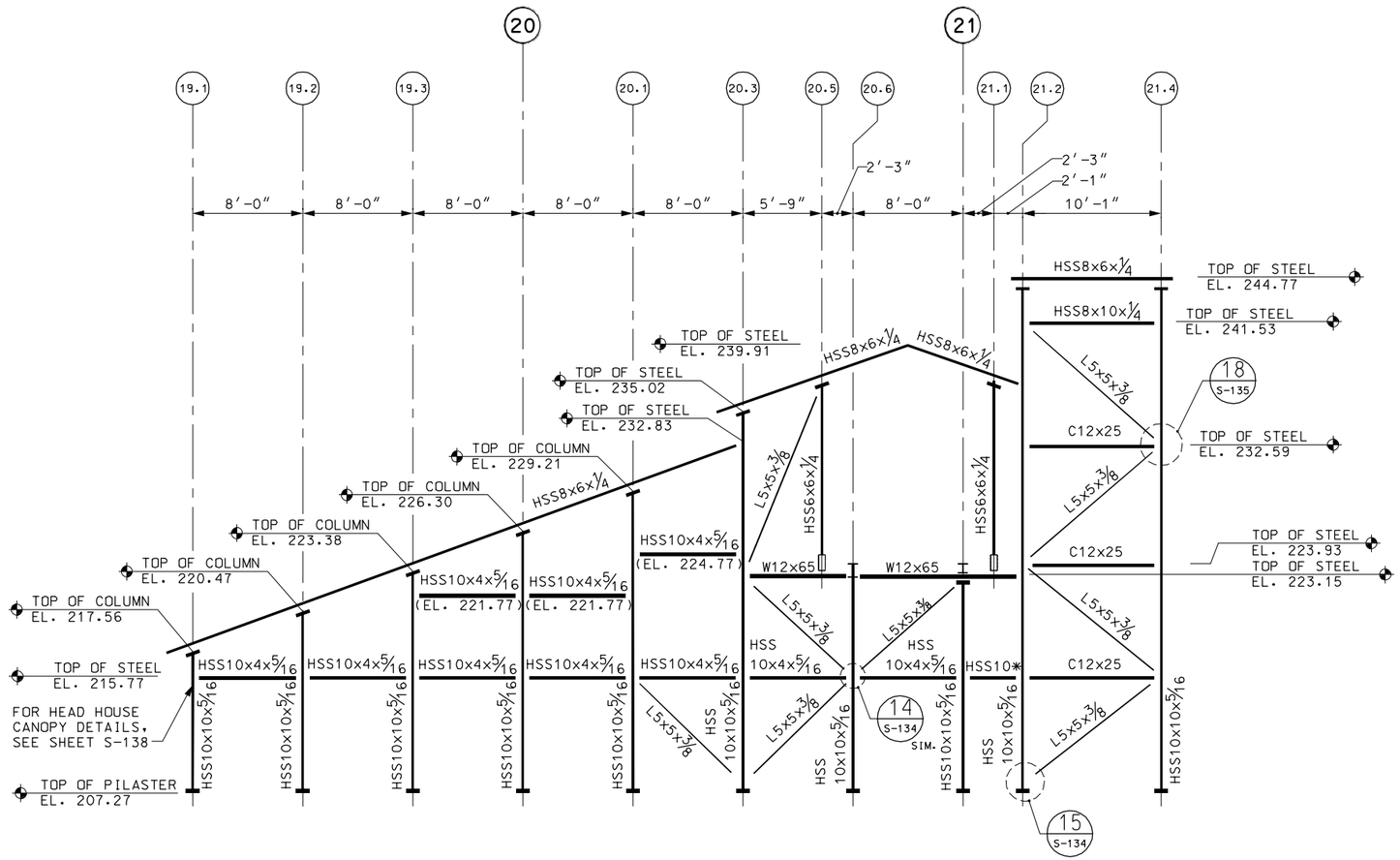

FRAME ELEVATION AT COLUMN LINE H
SCALE: 3/16" = 1'-0"

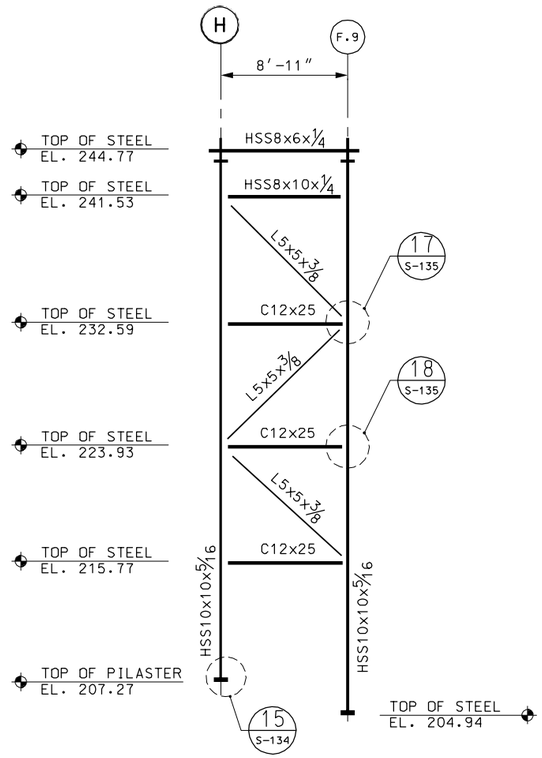

FRAME ELEVATION AT COLUMN LINE 21.4
SCALE: 3/16" = 1'-0"

90% SUBMITTAL
NOT FOR CONSTRUCTION

MASSACHUSETTS BAY TRANSPORTATION AUTHORITY
FITCHBURG COMMUTER RAIL LINE
IMPROVEMENT PROJECT
CONTRACT NO. G67CN01

SOUTH ACTON STATION
HEAD HOUSES FRAME ELEVATIONS
SHEET 5

ISSUE	DATE	DESCRIPTION	BY	CHKD.	APP.

HNTB 300 APOLLO DRIVE CHELMSFORD, MA 01824 (978) 905-4000
PROJECT MANAGER Date

MASSACHUSETTS BAY TRANSPORTATION AUTHORITY
APPROVED BY:
PROJECT MANAGER Date

JACOBS 343 CONGRESS STREET BOSTON, MA 02110 (617) 242-9222

HORIZ: AS NOTED	DES. BY	DR. BY	CHK. BY	PLAN NO.	ISSUE
VERT: AS NOTED	DJM	DJM			
DATE: 9/8/11				SHEET S-127	

FILE NAME: P:\MBTA\2008\E2X37800\CAD\700CADD\702STATIONS\South Acton\Structural\90% Submission\ 123-127_Head_Houses_Frame_Elevations.dwg
PLOT DATE: Sep 06, 2011 - 10:40am

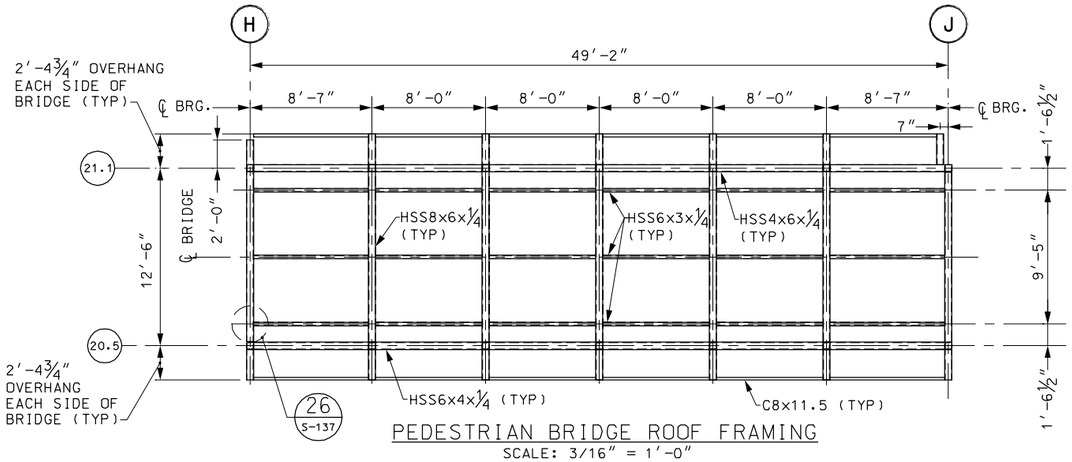

PEDESTRIAN BRIDGE ROOF FRAMING
SCALE: 3/16″ = 1′-0″

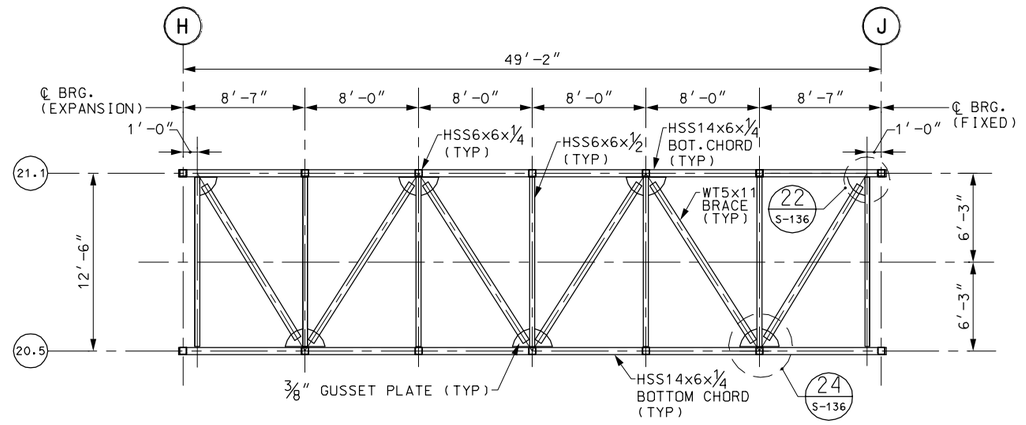

PEDESTRIAN BRIDGE DECK FRAMING
SCALE: 3/16″ = 1′-0″

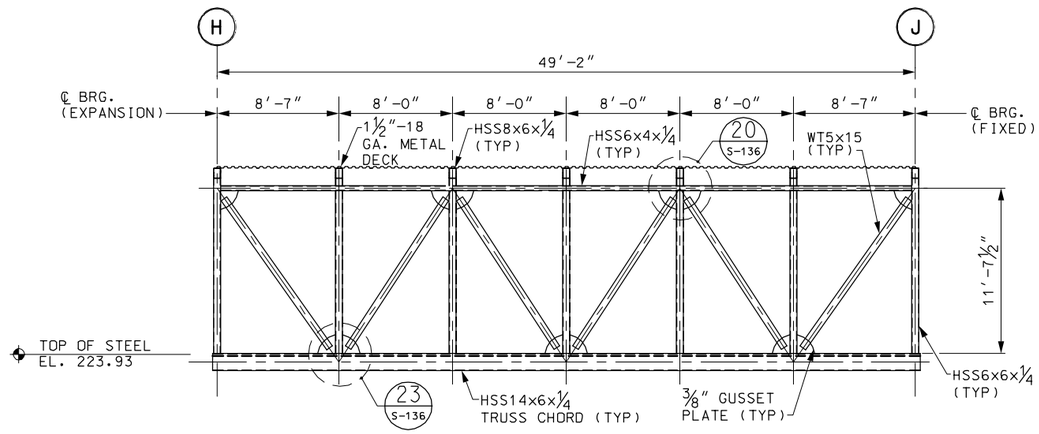

TYPICAL PEDESTRIAN BRIDGE SECTION AT TRUSS FRAME
SCALE: 3/16″ = 1′-0″

NOTES:

1. FOR GENERAL NOTES, SEE SHEET S-100.
2. FOR TRUSS BEARING DETAILS, SEE SHEET S-129.
3. FOR STEEL DETAILS, SEE SHEETS S-133 THRU S-140.
4. ALL STEEL ELEMENTS SHALL BE HOT-DIP GALVANIZED UNLESS OTHERWISE NOTED.

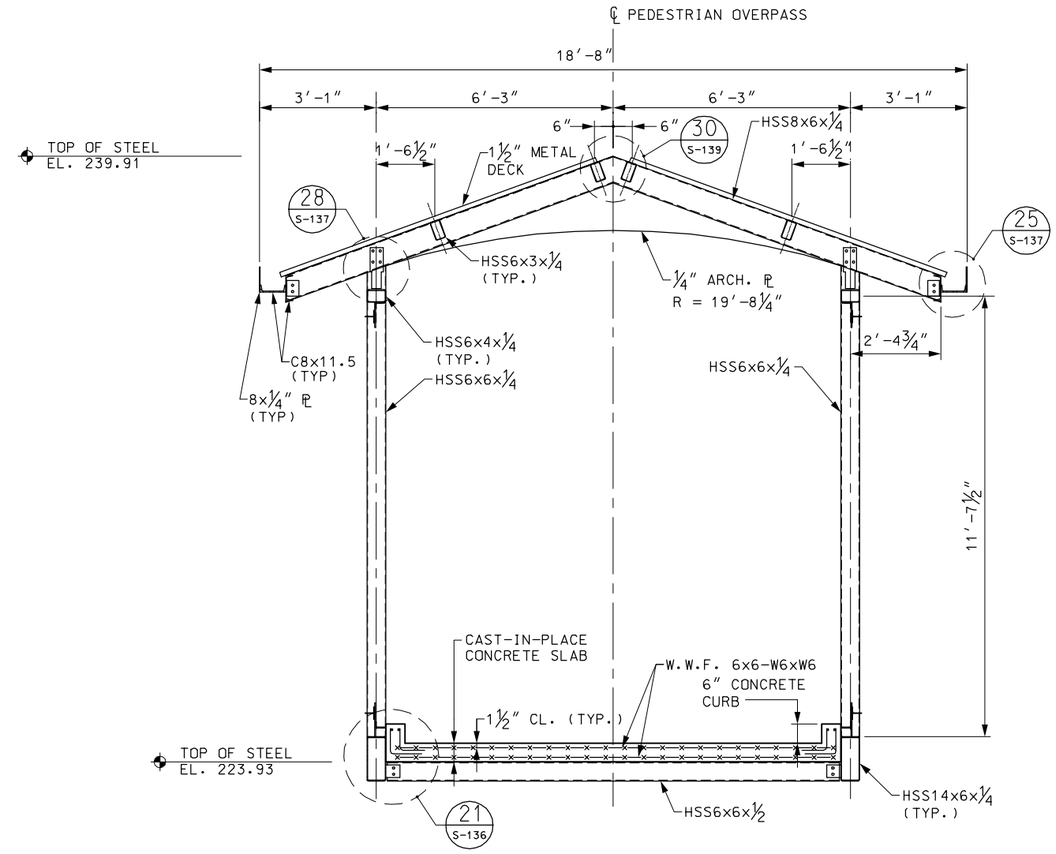

TYPICAL PEDESTRIAN BRIDGE SECTION
SCALE: 1/2″ = 1′-0″

90% SUBMITTAL
NOT FOR CONSTRUCTION

MASSACHUSETTS BAY TRANSPORTATION AUTHORITY

FITCHBURG COMMUTER RAIL LINE
IMPROVEMENT PROJECT
CONTRACT NO. G67CN01

SOUTH ACTON STATION PEDESTRIAN BRIDGE FRAMING AND SECTIONS

ISSUE	DATE	DESCRIPTION	BY	CHKD.	APP.

HNTB 300 APOLLO DRIVE CHELMSFORD, MA 01824 (978) 905-4000
PROJECT MANAGER Date

MASSACHUSETTS BAY TRANSPORTATION AUTHORITY
APPROVED BY:
PROJECT MANAGER Date

JACOBS 343 CONGRESS STREET BOSTON, MA 02110 (617) 242-9222

HORIZ: AS NOTED	DES. BY	DR. BY	CHK. BY	PLAN NO.	ISSUE
VERT: AS NOTED	DJM	DJM	MWT		
DATE: 9/8/11				SHEET S-128	

FILE NAME: P:\MBTA\2009\E2X37800\CAD\700CADD\702STATIONS\South Acton\Structural\90% Submission\128_Ped_Bridge_Plans_Secs.dwg
PLOT DATE: Sep 06, 2011 - 10:40am

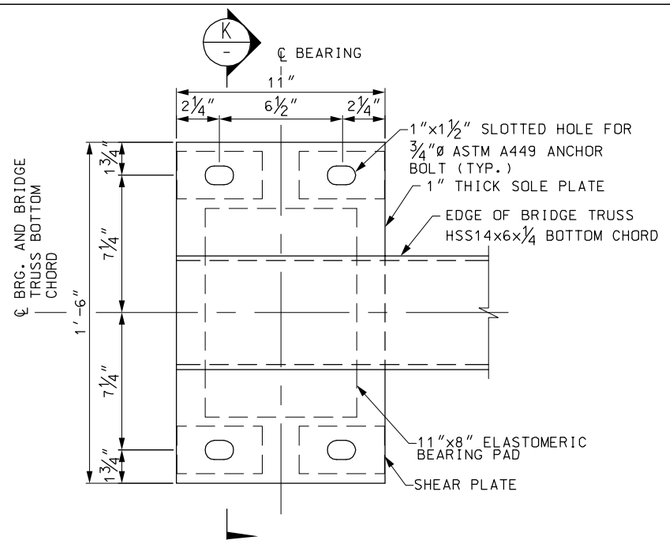

PLAN
SCALE: 3" = 1'-0"

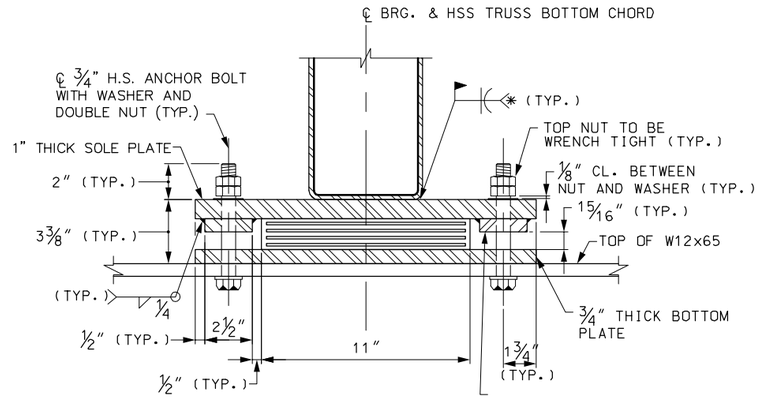

(*) – WELDS SHALL TERMINATE ¼" FROM EDGE OF PLATE.

SECTION K
SCALE: 3" = 1'-0"

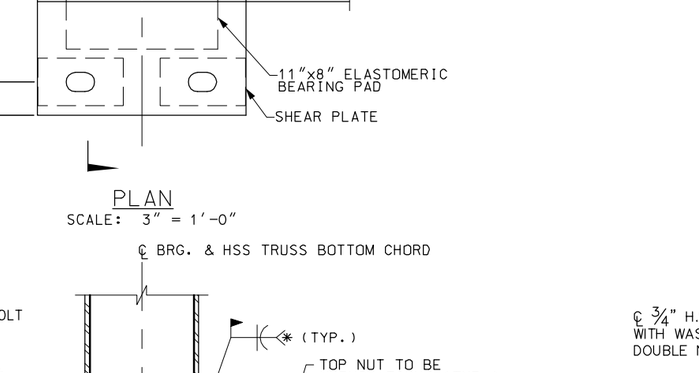

ELEVATION
SCALE: 3" = 1'-0"

EXPANSION BEARING

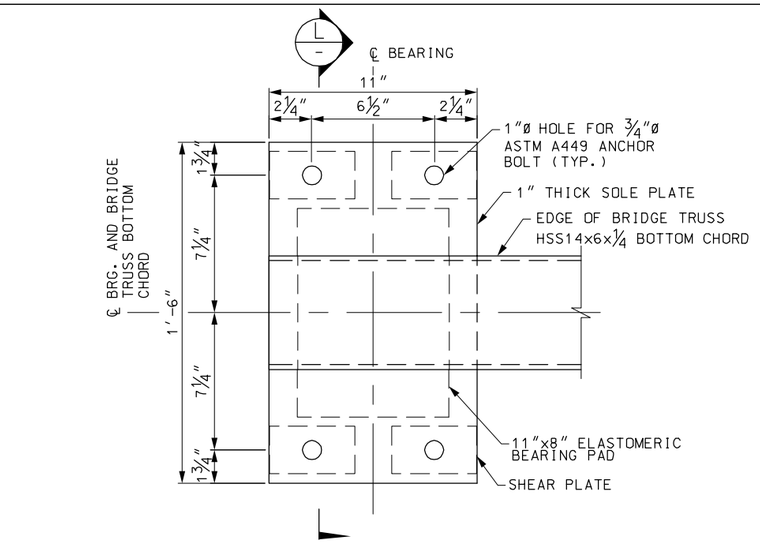

PLAN
SCALE: 3" = 1'-0"

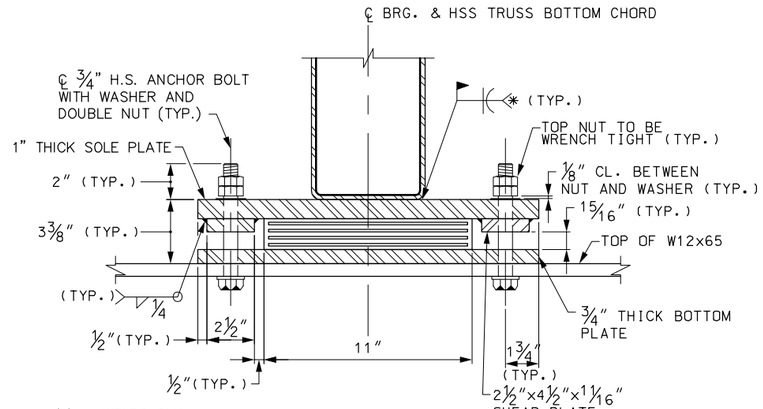

(*) – WELDS SHALL TERMINATE ¼" FROM EDGE OF PLATE.

SECTION L
SCALE: 3" = 1'-0"

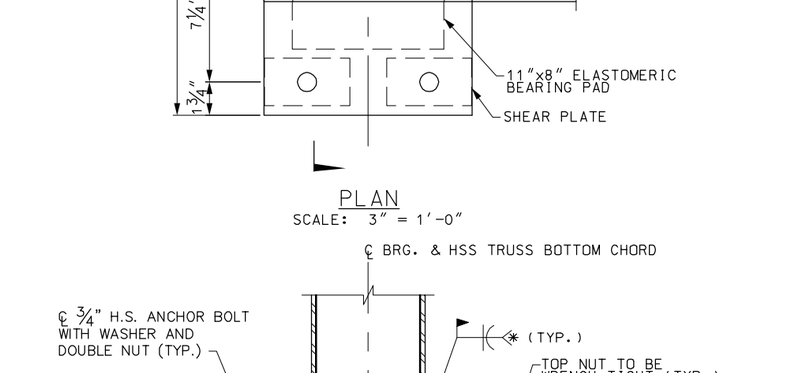

ELEVATION
SCALE: 3" = 1'-0"

FIXED BEARING

NOTES:

1. STEEL SOLE PLATE AND SHEAR PLATES SHALL CONFORM TO AASHTO M270 GRADE 36 AND SHALL BE HOT-DIP GALVANIZED.
2. STEEL LAMINATES SHALL CONFORM TO ASTM A 1011 GRADE 36.
3. PLACE SOLE PLATE ASSEMBLY SO THAT IT IS CENTERED AROUND ANCHOR BOLTS. CENTER THE ELASTOMERIC PAD UNDER THE SOLE PLATE.
4. ELASTOMER IN ALL BEARINGS SHALL HAVE GRADE 60 DUROMETER HARDNESS.
5. PAD SHALL BE VULCANIZED TO THE BOTTOM AND SOLE PLATES IN THE SHOP.
6. TRUSS SHALL BE ERECTED WHEN AMBIENT TEMPERATURE IS BETWEEN 50°F AND 77°F. IF THE TRUSS IS ERECTED AT A TEMPERATURE OUTSIDE OF THIS RANGE, THE BRIDGE SHALL BE JACKED TO ALLOW FOR RE-CENTERING OF THE SOLE PLATE ASSEMBLY AND ELASTOMERIC BEARINGS WHEN THE TEMPERATURE RETURNS TO THAT RANGE.
7. AFTER THE SOLE PLATE ASSEMBLY IS IN ITS FINAL POSITION, WELD TRUSS CHORD (HSS14x6) BOTTOM FLANGE TO SOLE PLATE.
8. ANCHOR BOLTS SHALL CONFORM TO ASTM F1554. ANCHOR BOLTS, NUTS AND WASHERS SHALL BE HOT-DIP GALVANIZED IN ACCORDANCE WITH ASTM A153.
9. GALVANIZED SURFACES DAMAGED BY WELDING OR ERECTION OPERATIONS SHALL BE REPAIRED BY APPLICATION OF AN ORGANIC ZINC RICH PRIMER.

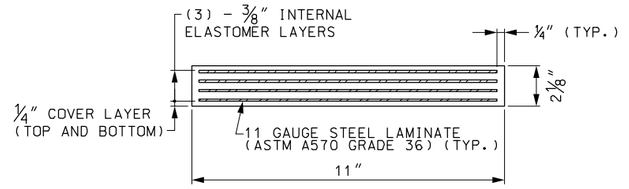

ELASTOMERIC BEARING PAD
SCALE: N.T.S

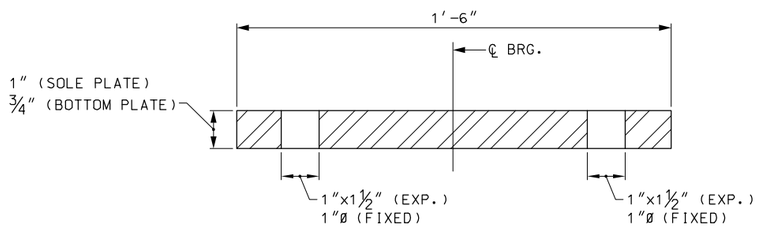

SOLE PLATE AND BOTTOM PLATE DETAIL
SCALE: N.T.S.

90% SUBMITTAL
NOT FOR CONSTRUCTION

MASSACHUSETTS BAY TRANSPORTATION AUTHORITY
FITCHBURG COMMUTER RAIL LINE IMPROVEMENT PROJECT
CONTRACT NO. G67CN01

SOUTH ACTON STATION PEDESTRIAN BRIDGE BEARING DETAILS

ISSUE	DATE	DESCRIPTION	BY	CHKD.	APP.

JACOBS 343 CONGRESS STREET BOSTON, MA 02110 (617) 242-9222

HNTB 300 APOLLO DRIVE CHELMSFORD, MA 01824 (978) 905-4000

PROJECT MANAGER Date

MASSACHUSETTS BAY TRANSPORTATION AUTHORITY
APPROVED BY:
PROJECT MANAGER Date

HORIZ: AS NOTED	DES. BY	DR. BY	CHK. BY	PLAN NO.	ISSUE
VERT: AS NOTED	DJM	DJM	MWT		
DATE: 9/8/11				SHEET S-129	

FILE NAME: P:\MBTA\2009\E2X37800\CAD\700CADD\702STATIONS\South Acton\Structural\90% Submission\ 129_Ped_Bridge_Bearing_Dets.dwg
PLOT DATE: Sep 06, 2011 - 10:40am

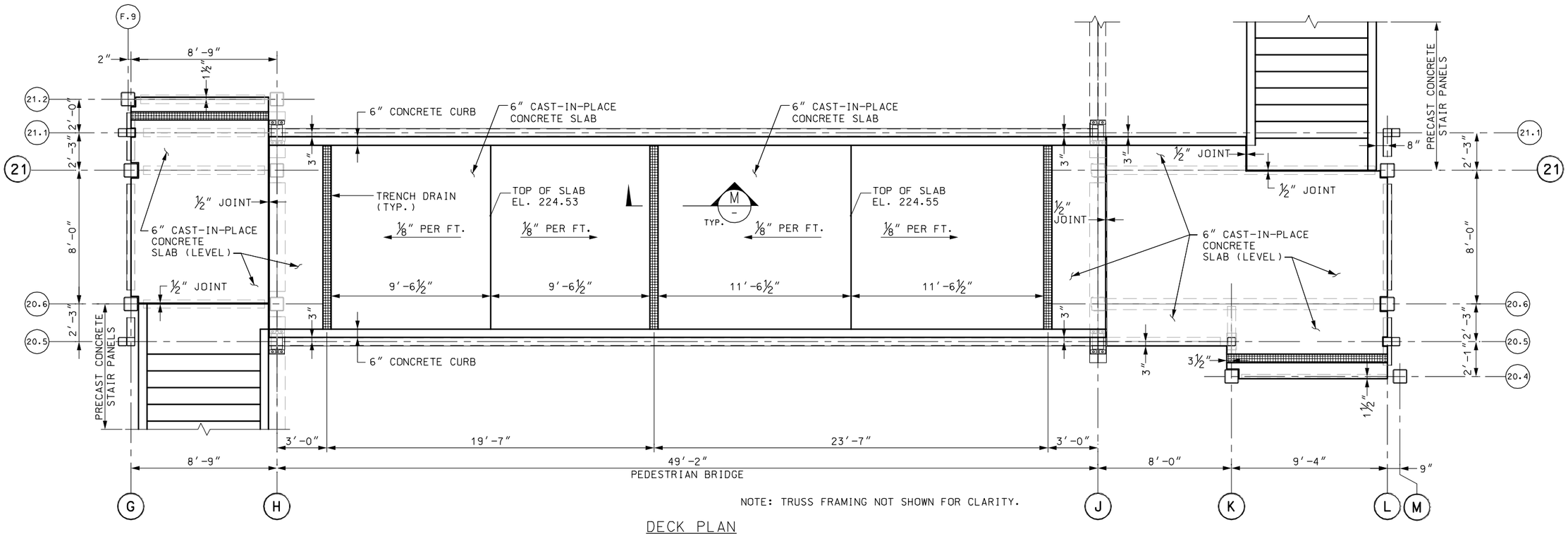

NOTE: TRUSS FRAMING NOT SHOWN FOR CLARITY.

DECK PLAN
SCALE: 5/16″ = 1′-0″

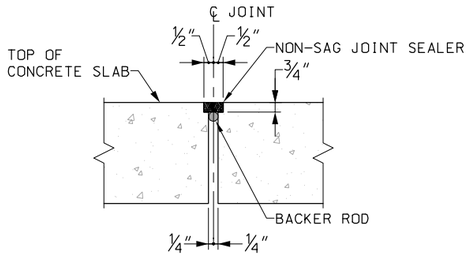

TYPICAL JOINT DETAIL
SCALE: 3″ = 1′-0″

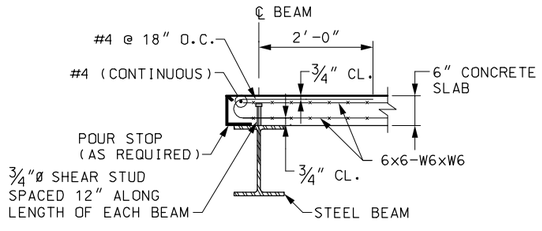

EDGE OF DECK DETAIL
NOT TO SCALE

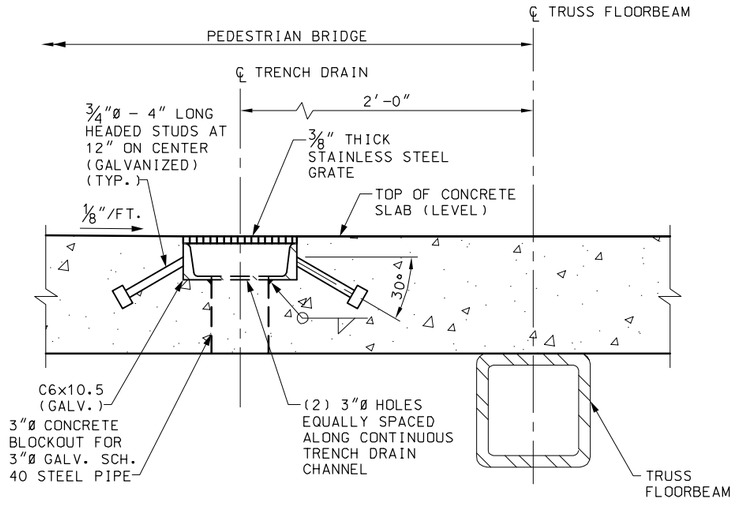

SECTION M
SCALE: 3″ = 1′-0″

NOTES:

1. FOR GENERAL NOTES, SEE SHEETS S-100 AND S-101.
2. TOP OF SLAB ELEVATION SHALL BE 224.43 UNLESS NOTED OTHERWISE.
3. FOR PRECAST CONCRETE STAIR DETAILS, SEE SHEET S-131.

90% SUBMITTAL
NOT FOR CONSTRUCTION

MASSACHUSETTS BAY TRANSPORTATION AUTHORITY

FITCHBURG COMMUTER RAIL LINE
IMPROVEMENT PROJECT
CONTRACT NO. G67CN01

SOUTH ACTON STATION
HEAD HOUSES DECK PLAN AND DETAILS

ISSUE	DATE	DESCRIPTION	BY	CHKD.	APP.

HNTB — 300 APOLLO DRIVE, CHELMSFORD, MA 01824, (978) 905-4000
PROJECT MANAGER Date

MASSACHUSETTS BAY TRANSPORTATION AUTHORITY
APPROVED BY:
PROJECT MANAGER Date

JACOBS — 343 CONGRESS STREET, BOSTON, MA 02110, (617) 242-9222

HORIZ: AS NOTED	DES. BY	DR. BY	CHK. BY	PLAN NO.	ISSUE
VERT: AS NOTED	DJM	DJM	MWT		
DATE: 9/8/11				SHEET S-130	

FILE NAME: P:\MBTA\2008\E2X37800\CAD\700CADD\702STATIONS\South Acton\Structural\90% Submission\130_Head_Houses_Deck_Plan.dwg
PLOT DATE: Sep 06, 2011 – 10:40am

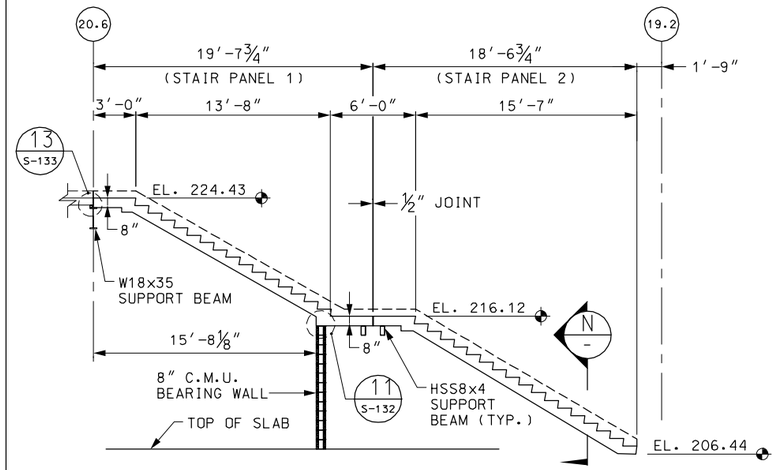

PRECAST STAIR ELEVATION AT INBOUND HEAD HOUSE

SCALE: 3/16″ = 1′-0″

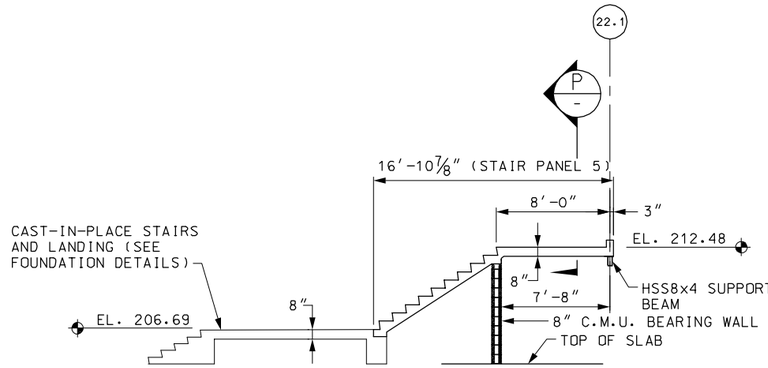

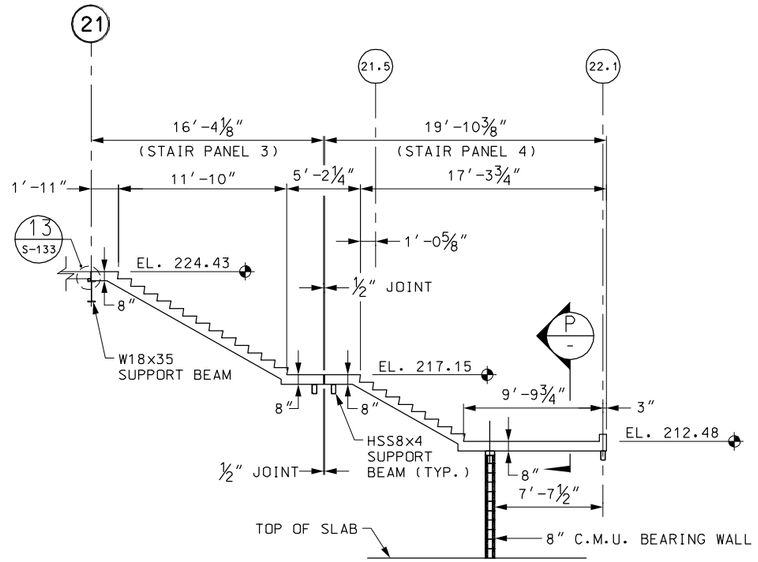

PRECAST STAIR ELEVATION AT OUTBOUND HEAD HOUSE

SCALE: 3/16″ = 1′-0″

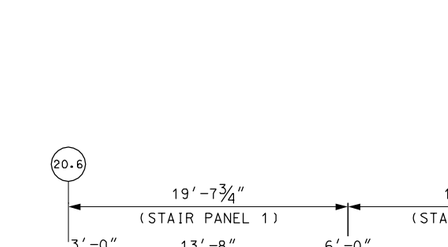

TYPICAL STAIR TREAD DETAIL

SCALE: 1 1/2″ = 1′-0″

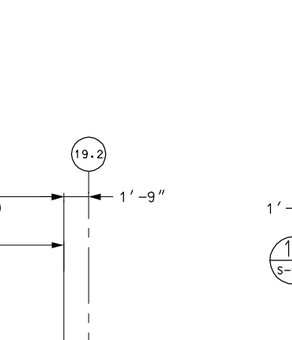

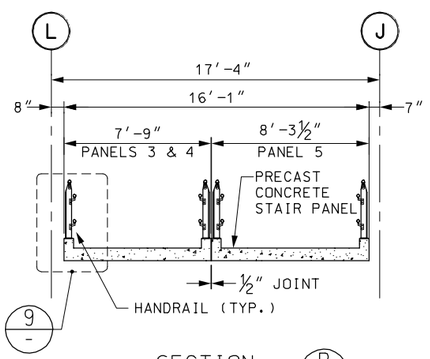

NOTES:

1. FOR GENERAL NOTES, SEE SHEET S-100.
2. ANCHORS SHALL HAVE A MINIMUM EMBEDMENT LENGTH OF 3¾″ AND SHALL BE TYPE 316 STAINLESS STEEL. ANCHORS SHALL BE TORQUE-CONTROLLED WITH A MINIMUM ULTIMATE STRENGTH OF 115,000 PSI.

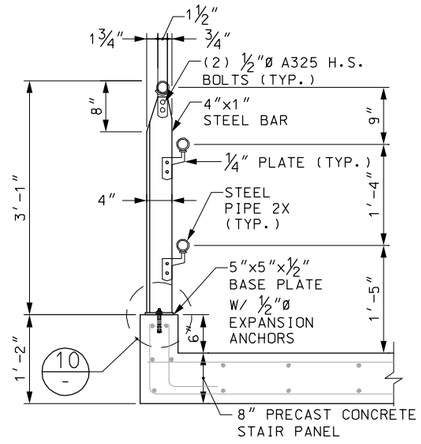

DETAIL 9

SCALE: 1″ = 1′-0″

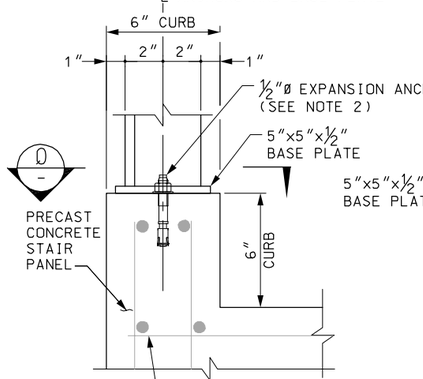

DETAIL 10

SCALE: 3″ = 1′-0″

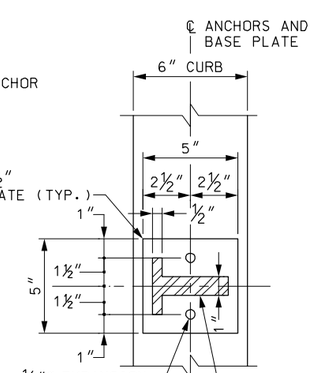

SECTION Q

SCALE: 3″ = 1′-0″

90% SUBMITTAL
NOT FOR CONSTRUCTION

MASSACHUSETTS BAY TRANSPORTATION AUTHORITY

FITCHBURG COMMUTER RAIL LINE
IMPROVEMENT PROJECT
CONTRACT NO. G67CN01

SOUTH ACTON STATION
HEAD HOUSES PRECAST STAIRS
ELEVATIONS AND DETAILS

ISSUE	DATE	DESCRIPTION	BY	CHKD.	APP.

HNTB 300 APOLLO DRIVE CHELMSFORD, MA 01824 (978) 905-4000

PROJECT MANAGER Date

MASSACHUSETTS BAY TRANSPORTATION AUTHORITY

APPROVED BY:

PROJECT MANAGER Date

JACOBS 343 CONGRESS STREET BOSTON, MA 02110 (617) 242-9222

HORIZ: AS NOTED	DES. BY	DR. BY	CHK. BY	PLAN NO.	ISSUE
VERT: AS NOTED	DJM	DJM	MWT		
DATE: 9/8/11				SHEET S-131	

FILE NAME: P:\MBTA\2008\E2X37800\CAD\700CADD\702STATIONS\South Acton\Structural\90% Submission\131_Head_Houses_Precast_Stairs_Dets.dwg
PLOT DATE: Sep 06, 2011 - 10:40am

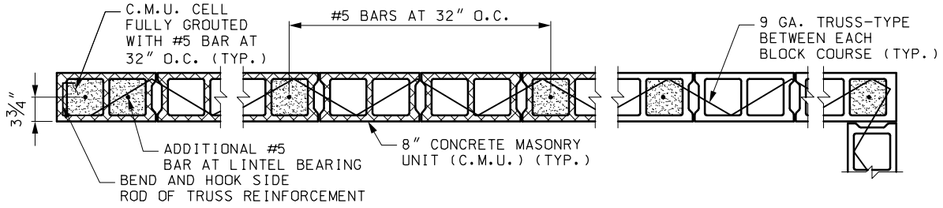

AT ENDS TYPICAL AT CORNERS

8" THICK MASONRY WALL REINFORCING SCHEDULE
NOT TO SCALE

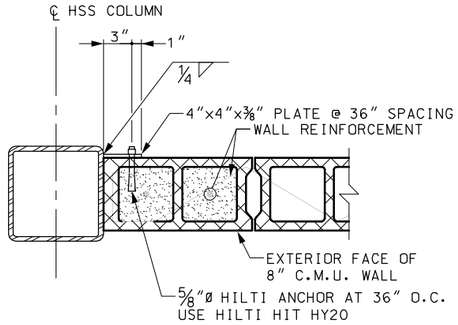

TYPICAL C.M.U.-COLUMN CONNECTION DETAIL
NOT TO SCALE

NOTES:

1. FOR GENERAL NOTES, SEE SHEETS S-100 AND S-101.
2. FOR LOCATIONS OF CONCRETE MASONRY WALLS AND ADDITIONAL DETAILS, SEE ARCHITECTURAL DRAWINGS.
3. COMPRESSIBLE FILLER SHALL BE INSTALLED PER MANUFACTURERS' SPECIFICATIONS. FILLER SHALL BE NON-TOXIC, NON-FLAMABLE MATERIAL AND SHALL PROVIDE AN AIR TIGHT SEAL.

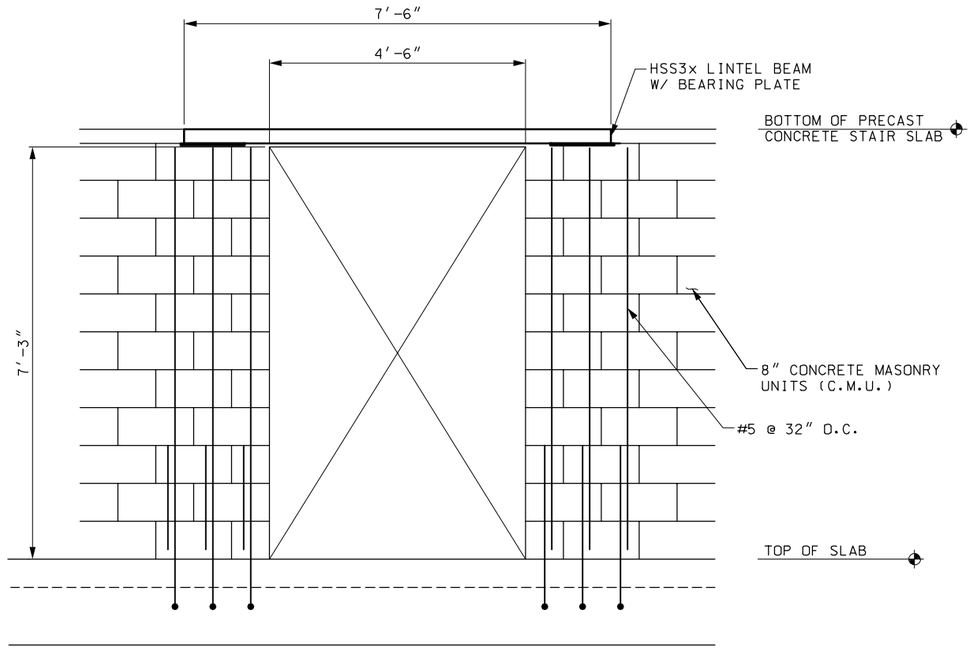

MASONRY OPENING AT DOOR
NOT TO SCALE

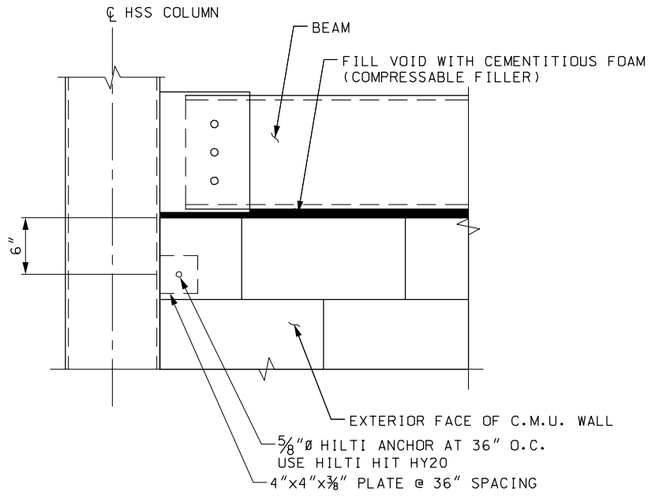

TYPICAL C.M.U. DETAIL AT UNDERSIDE OF BEAM
NOT TO SCALE

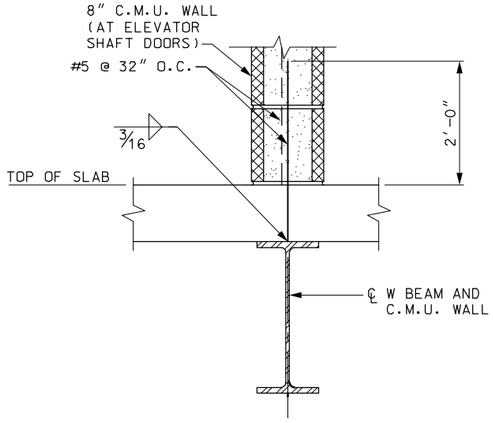

TYPICAL C.M.U. AT W BEAM DETAIL
NOT TO SCALE

90% SUBMITTAL
NOT FOR CONSTRUCTION

ISSUE	DATE	DESCRIPTION	BY	CHKD.	APP.

JACOBS 343 CONGRESS STREET BOSTON, MA 02110 (617) 242-9222

MASSACHUSETTS BAY TRANSPORTATION AUTHORITY

FITCHBURG COMMUTER RAIL LINE IMPROVEMENT PROJECT CONTRACT NO. G67CN01

SOUTH ACTON STATION
HEAD HOUSES MASONRY WALL DETAILS

HNTB 300 APOLLO DRIVE CHELMSFORD, MA 01824 (978) 905-4000

PROJECT MANAGER Date

MASSACHUSETTS BAY TRANSPORTATION AUTHORITY
APPROVED BY:
PROJECT MANAGER Date

HORIZ: AS NOTED	DES. BY	DR. BY	CHK. BY	PLAN NO.	ISSUE
VERT: AS NOTED	DJM	DJM	MWT		
DATE: 9/8/11				SHEET S-132	

FILE NAME: P:\MBTA\2008\E2X37800\CAD\700CADD\702STATIONS\South Acton\Structural\90% Submission\ 132_Head_Houses_Masonry_Wall_Dets.dwg
PLOT DATE: Sep 06, 2011 - 10:40am

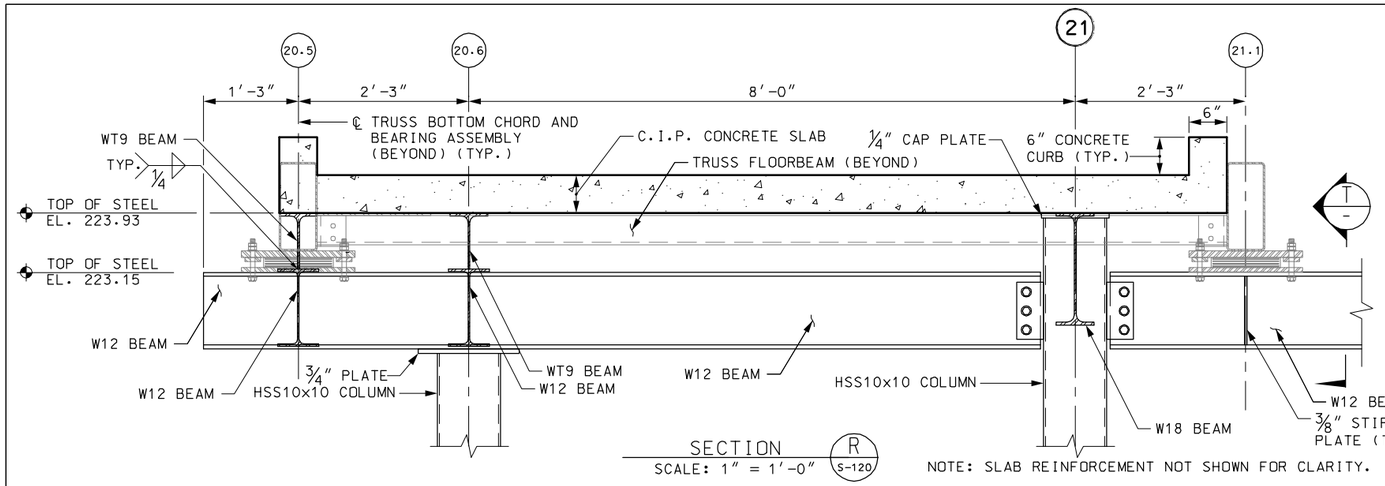

SECTION
SCALE: 1" = 1'-0" R S-120

NOTE: SLAB REINFORCEMENT NOT SHOWN FOR CLARITY.

NOTES:

1. FOR GENERAL NOTES, SEE SHEET S-100.
2. THE CONTRACTOR SHALL COORDINATE STRUCTURAL AND ARCHITECTURAL DRAWINGS. ANY DISCREPANCIES SHALL BE BROUGHT TO THE ATTENTION OF THE ENGINEER PRIOR TO STEEL FABRICATION.
3. ALL STEEL ELEMENTS SHALL BE HOT-DIP GALVANIZED UNLESS OTHERWISE NOTED.

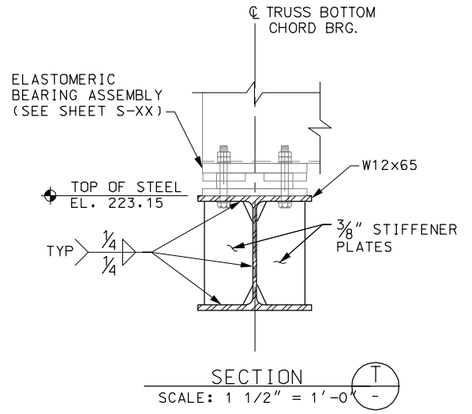

SECTION
SCALE: 1 1/2" = 1'-0" T -

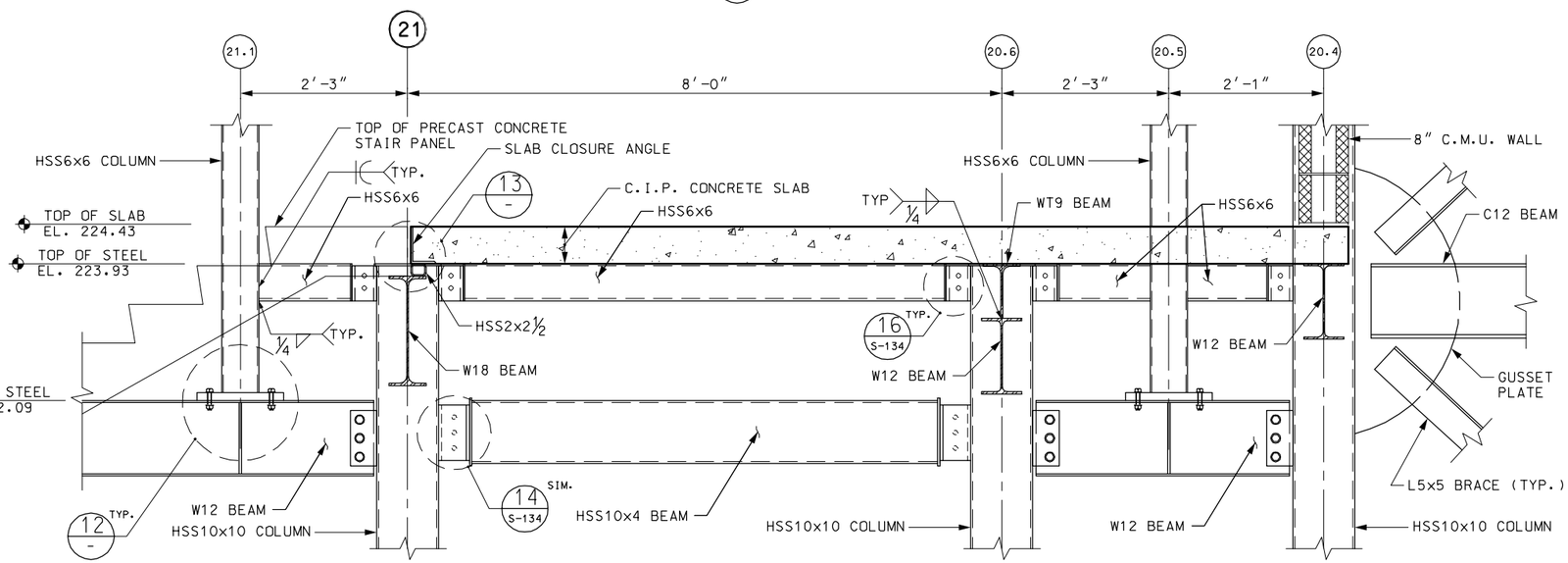

SECTION
SCALE: 1" = 1'-0" S S-120

NOTE: SLAB REINFORCEMENT AND DECKING NOT SHOWN FOR CLARITY.

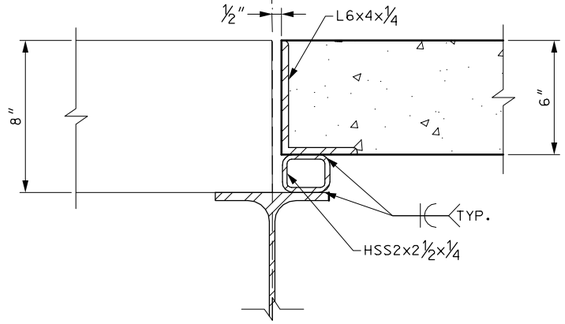

DETAIL
SCALE: 3" = 1'-0" 13 - 13 S-131

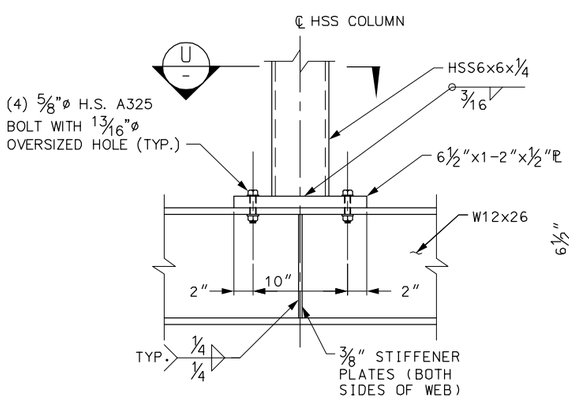

DETAIL
SCALE: 1 1/2" = 1'-0" 12 -

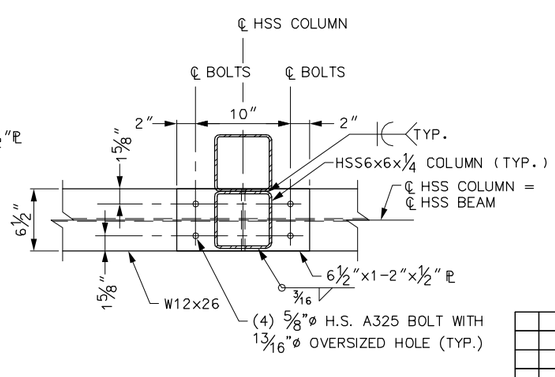

SECTION
SCALE: 1 1/2" = 1'-0" U -

90% SUBMITTAL
NOT FOR CONSTRUCTION

FILE NAME: P:\MBTA\2008\E2X37800\CAD\700CADD\702STATIONS\South Acton\Structural\90% Submission\133-140_Steel_Dets.dwg
PLOT DATE: Sep 06, 2011 - 10:40am

MASSACHUSETTS BAY TRANSPORTATION AUTHORITY
FITCHBURG COMMUTER RAIL LINE
IMPROVEMENT PROJECT
CONTRACT NO. G67CN01

SOUTH ACTON STATION STEEL DETAILS SHEET 1

ISSUE	DATE	DESCRIPTION	BY	CHKD.	APP.

HNTB 300 APOLLO DRIVE CHELMSFORD, MA 01824 (978) 905-4000
PROJECT MANAGER Date

MASSACHUSETTS BAY TRANSPORTATION AUTHORITY
APPROVED BY:
PROJECT MANAGER Date

JACOBS 343 CONGRESS STREET BOSTON, MA 02110 (617) 242-9222

	DES. BY	DR. BY	CHK. BY
HORIZ: AS NOTED	DJM	DJM	MWT
VERT: AS NOTED			
DATE: 9/8/11			

PLAN NO. SHEET S-133
ISSUE

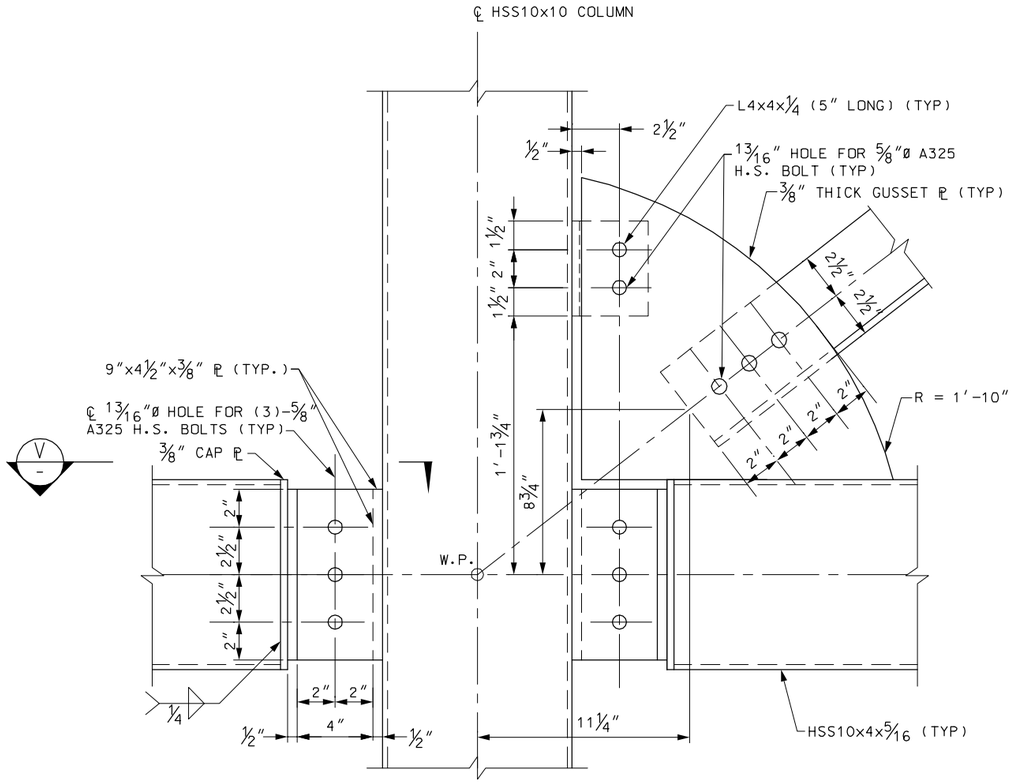

DETAIL — SCALE: 3" = 1'-0" — 14 S-123 | 14 S-124 | 14 S-126 | 14 S-127

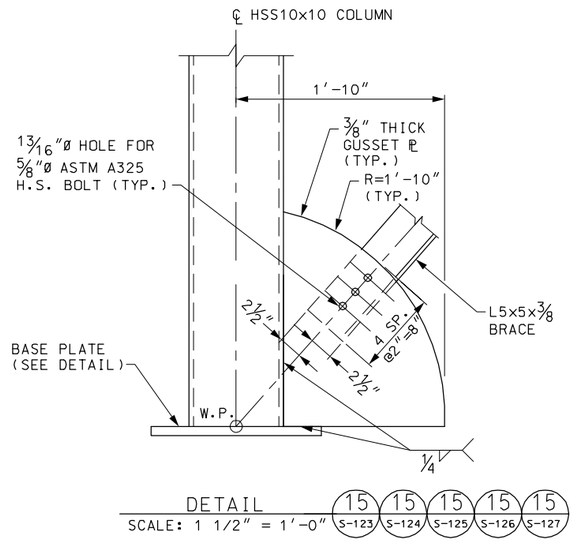

DETAIL — SCALE: 1 1/2" = 1'-0" — 15 S-123 | 15 S-124 | 15 S-125 | 15 S-126 | 15 S-127

SCHEDULE "A" STANDARD BOLTED CONNECTION			
BEAM SIZE	NO. AND SIZE OF BOLTS REQUIRED	PLATE THICKNESS	WELD SIZE (W)
W10	(2) 3/4" DIA.	3/8	1/4
W12	(3) 3/4" DIA.	3/8	1/4
W18	(4) 3/4" DIA.	1/2	5/16

NOTES:

1. FOR GENERAL NOTES, SEE SHEET S-100.
2. THE CONTRACTOR SHALL COORDINATE STRUCTURAL AND ARCHITECTURAL DRAWINGS. ANY DISCREPANCIES SHALL BE BROUGHT TO THE ATTENTION OF THE ENGINEER PRIOR TO STEEL FABRICATION.
3. ALL STEEL ELEMENTS SHALL BE HOT-DIP GALVANIZED UNLESS OTHERWISE NOTED.

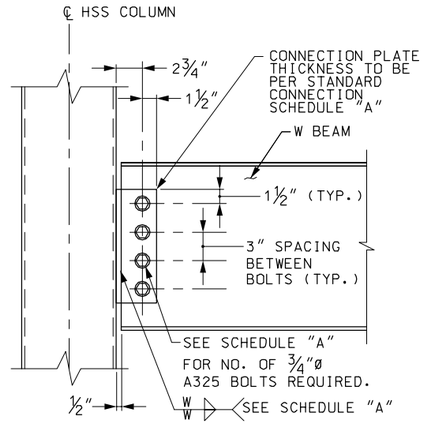

TYPICAL W BEAM-COLUMN CONNECTION DETAIL
SCALE: N.T.S.

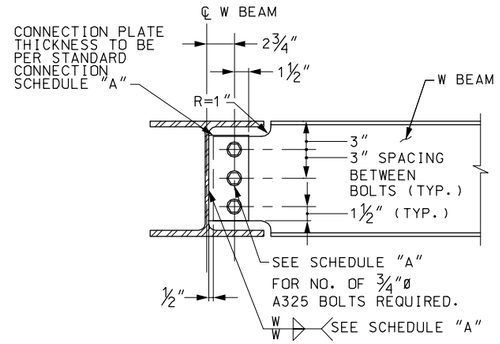

TYPICAL W BEAM-W BEAM CONNECTION DETAIL
SCALE: N.T.S.

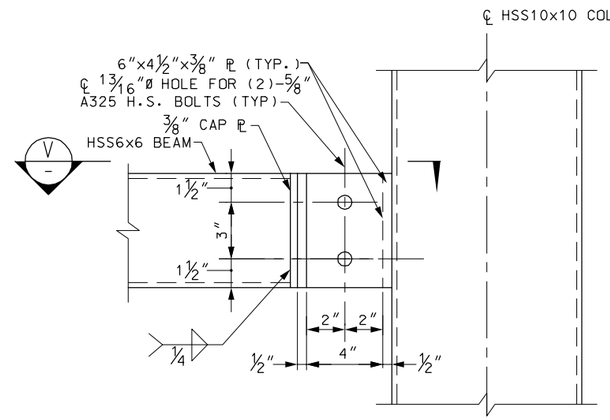

DETAIL — SCALE: 3" = 1'-0" — 16 S-133

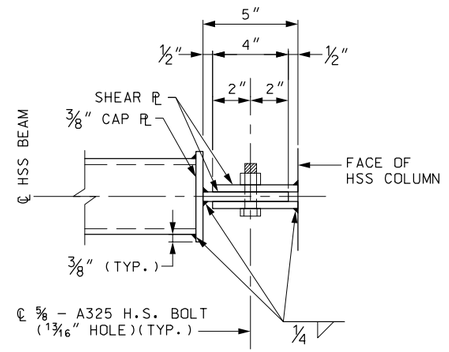

SECTION V — SCALE: 3" = 1'-0"

90% SUBMITTAL
NOT FOR CONSTRUCTION

ISSUE	DATE	DESCRIPTION	BY	CHKD.	APP.

JACOBS — 343 CONGRESS STREET, BOSTON, MA 02110, (617) 242-9222

HNTB — 300 APOLLO DRIVE, CHELMSFORD, MA 01824, (978) 905-4000

PROJECT MANAGER — Date

MASSACHUSETTS BAY TRANSPORTATION AUTHORITY — APPROVED BY: — PROJECT MANAGER — Date

HORIZ: AS NOTED	DES. BY	DR. BY	CHK. BY	PLAN NO.	ISSUE
VERT: AS NOTED	DJM	DJM	MWT		
DATE: 9/8/11				SHEET S-134	

MASSACHUSETTS BAY TRANSPORTATION AUTHORITY
FITCHBURG COMMUTER RAIL LINE IMPROVEMENT PROJECT
CONTRACT NO. G67CN01

SOUTH ACTON STATION STEEL DETAILS SHEET 2

FILE NAME: P:\MBTA\2009\E2X37800\CAD\700CADD\702STATIONS\South Acton\Structural\90% Submission\ 133-140_Steel_Dets.dwg
PLOT DATE: Sep 06, 2011 - 10:40am

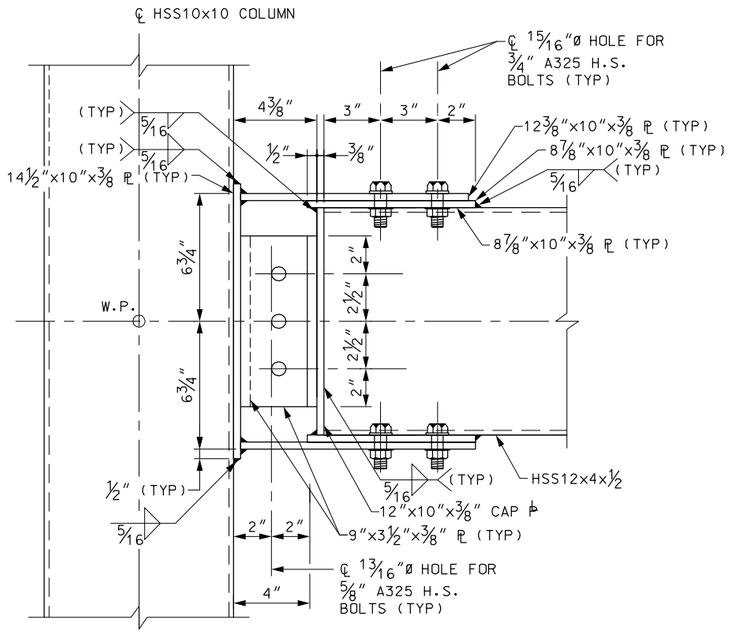

ELEVATION

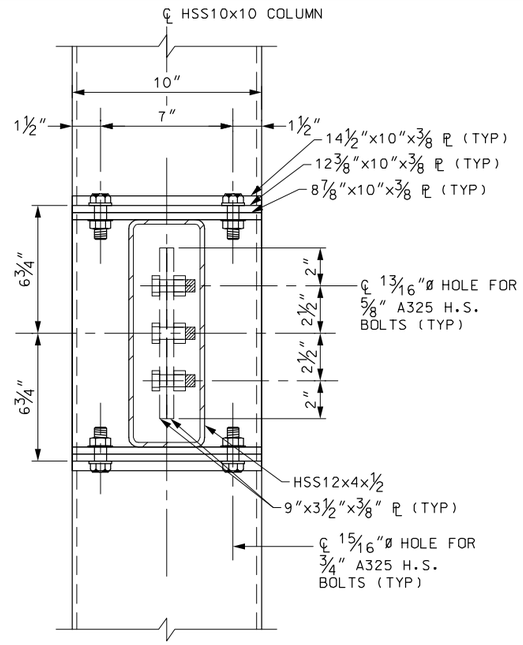

SECTION

NOTES:

1. FOR GENERAL NOTES, SEE SHEET S-100.
2. THE CONTRACTOR SHALL COORDINATE STRUCTURAL AND ARCHITECTURAL DRAWINGS. ANY DISCREPANCIES SHALL BE BROUGHT TO THE ATTENTION OF THE ENGINEER PRIOR TO STEEL FABRICATION.
3. ALL STEEL ELEMENTS SHALL BE HOT-DIP GALVANIZED UNLESS OTHERWISE NOTED.

TYPICAL MOMENT CONNECTION DETAIL

SCALE: 3" = 1'-0"

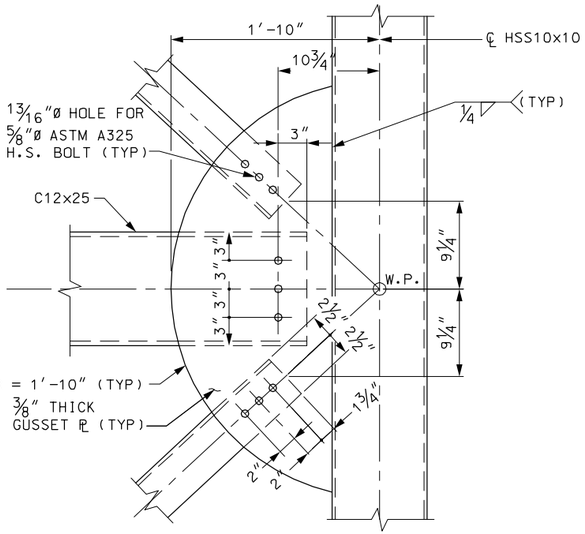

DETAIL 17 S-124 17 S-125 17 S-127
SCALE: 1 1/2" = 1'-0"

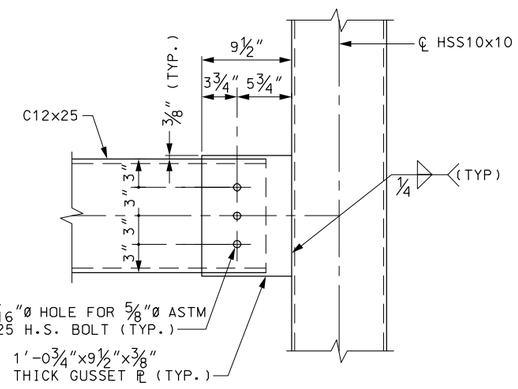

DETAIL 18 S-123 18 S-124 18 S-125 18 S-126 18 S-127
SCALE: 1 1/2" = 1'-0"

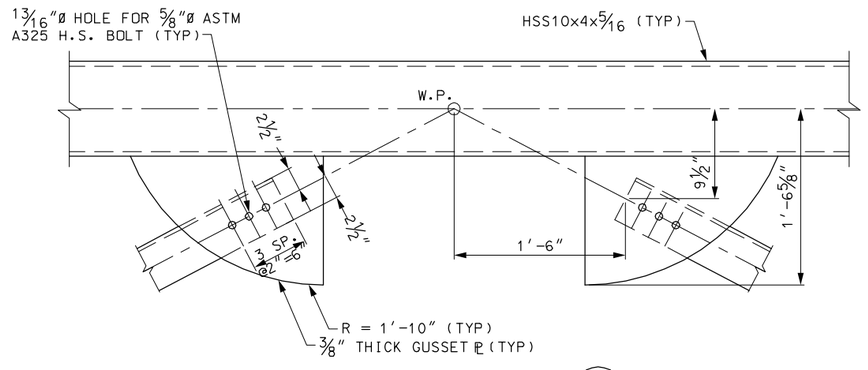

DETAIL 19 x
SCALE: 1 1/2" = 1'-0"

90% SUBMITTAL
NOT FOR CONSTRUCTION

MASSACHUSETTS BAY TRANSPORTATION AUTHORITY
FITCHBURG COMMUTER RAIL LINE IMPROVEMENT PROJECT
CONTRACT NO. G67CN01

SOUTH ACTON STATION STEEL DETAILS SHEET 3

ISSUE	DATE	DESCRIPTION	BY	CHKD.	APP.

HNTB — 300 APOLLO DRIVE, CHELMSFORD, MA 01824, (978) 905-4000
PROJECT MANAGER Date

JACOBS — 343 CONGRESS STREET, BOSTON, MA 02110, (617) 242-9222

MASSACHUSETTS BAY TRANSPORTATION AUTHORITY
APPROVED BY:
PROJECT MANAGER Date

HORIZ: AS NOTED	DES. BY	DR. BY	CHK. BY	PLAN NO.	ISSUE
VERT: AS NOTED	DJM	DJM	MWT		
DATE: 9/8/11				SHEET S-135	

FILE NAME: P:\MBTA 2008\E2X37800\CAD\700CADD\702STATIONS\South Acton\Structural\90% Submission\133-140_SteelDets.dwg
PLOT DATE: Sep 06, 2011 - 10:40am

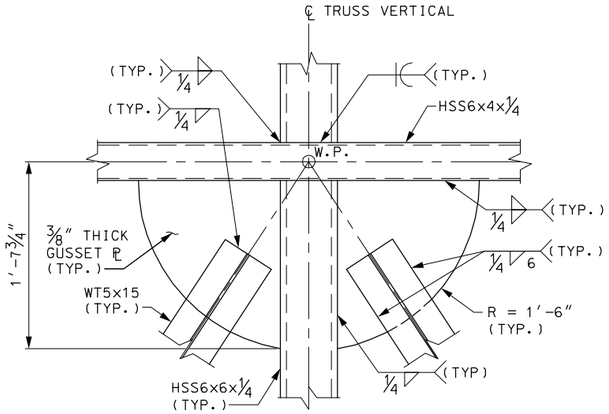

DETAIL 20 S-128
SCALE: 1 1/2" = 1'-0"

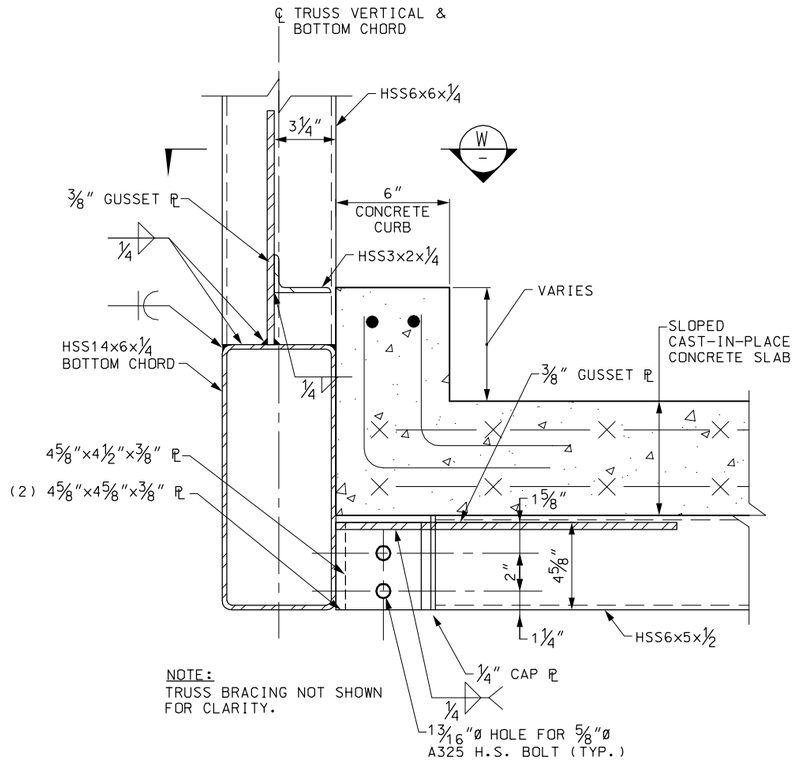

NOTE:
TRUSS BRACING NOT SHOWN FOR CLARITY.

DETAIL 21 S-128
SCALE: 3" = 1'-0"

NOTES:

1. FOR GENERAL NOTES, SEE SHEET S-100.
2. THE CONTRACTOR SHALL COORDINATE STRUCTURAL AND ARCHITECTURAL DRAWINGS. ANY DISCREPANCIES SHALL BE BROUGHT TO THE ATTENTION OF THE ENGINEER PRIOR TO STEEL FABRICATION.
3. ALL STEEL ELEMENTS SHALL BE HOT-DIP GALVANIZED UNLESS OTHERWISE NOTED.

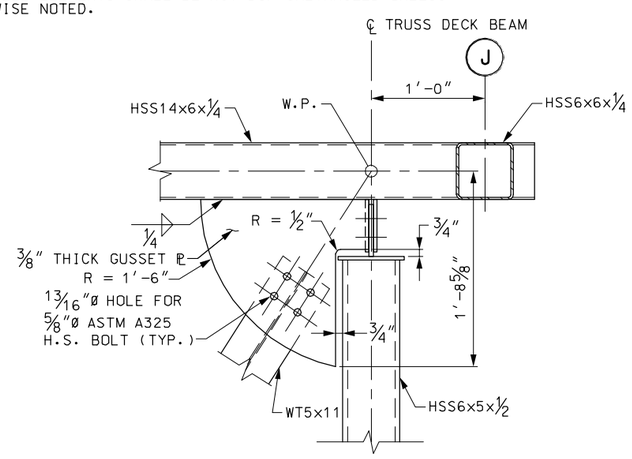

DETAIL 22 S-128
SCALE: 1 1/2" = 1'-0"

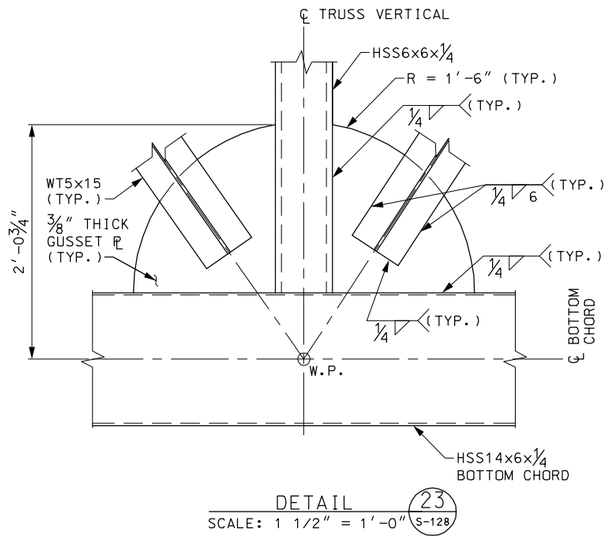

DETAIL 23 S-128
SCALE: 1 1/2" = 1'-0"

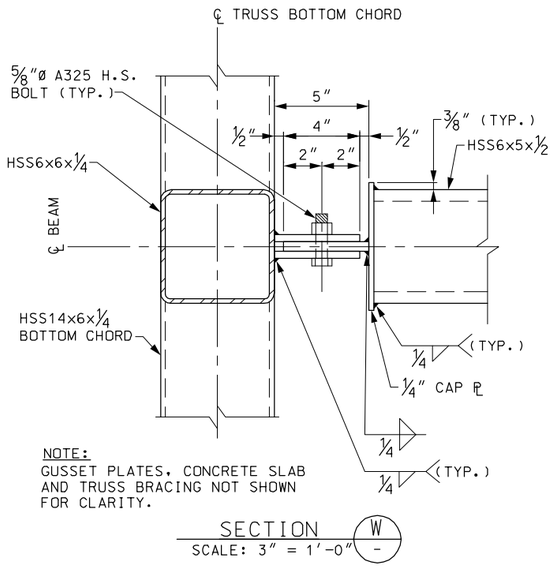

NOTE:
GUSSET PLATES, CONCRETE SLAB AND TRUSS BRACING NOT SHOWN FOR CLARITY.

SECTION W - SCALE: 3" = 1'-0"

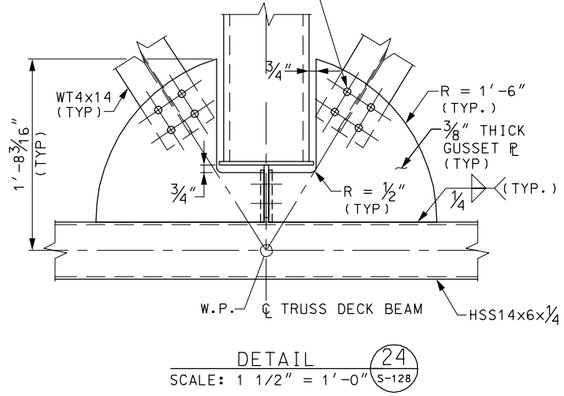

DETAIL 24 S-128
SCALE: 1 1/2" = 1'-0"

90% SUBMITTAL
NOT FOR CONSTRUCTION

MASSACHUSETTS BAY TRANSPORTATION AUTHORITY
FITCHBURG COMMUTER RAIL LINE IMPROVEMENT PROJECT
CONTRACT NO. G67CN01

SOUTH ACTON STATION STEEL DETAILS SHEET 4

ISSUE	DATE	DESCRIPTION	BY	CHKD.	APP.

HNTB 300 APOLLO DRIVE CHELMSFORD, MA 01824 (978) 905-4000
PROJECT MANAGER Date

MASSACHUSETTS BAY TRANSPORTATION AUTHORITY
APPROVED BY:
PROJECT MANAGER Date

JACOBS 343 CONGRESS STREET BOSTON, MA 02110 (617) 242-9222

	DES. BY	DR. BY	CHK. BY
HORIZ: AS NOTED	DJM	DJM	
VERT: AS NOTED			
DATE: 9/8/11			

PLAN NO.
SHEET S-136
ISSUE

FILE NAME: P:\MBTA\2008\E2X37800\CAD\700CADD\702STATIONS\South Acton\Structural\90% Submission\ 133-140_Steel_Dets.dwg
PLOT DATE: Sep 06, 2011 - 10:40am

NOTES:

1. FOR GENERAL NOTES, SEE SHEET S-100.
2. THE CONTRACTOR SHALL COORDINATE STRUCTURAL AND ARCHITECTURAL DRAWINGS. ANY DISCREPANCIES SHALL BE BROUGHT TO THE ATTENTION OF THE ENGINEER PRIOR TO STEEL FABRICATION.
3. ALL STEEL ELEMENTS SHALL BE HOT-DIP GALVANIZED UNLESS OTHERWISE NOTED.

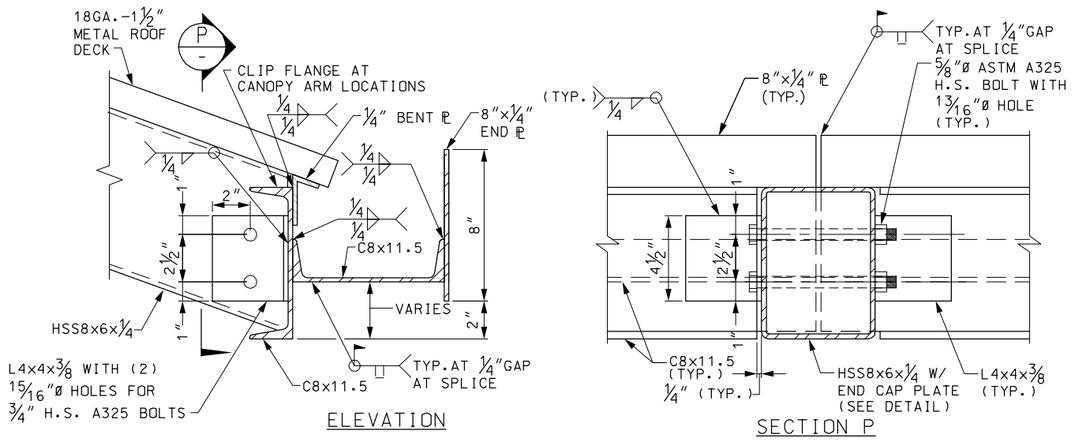

GUTTER DETAIL (25) SCALE: 3" = 1'-0" (S-128)

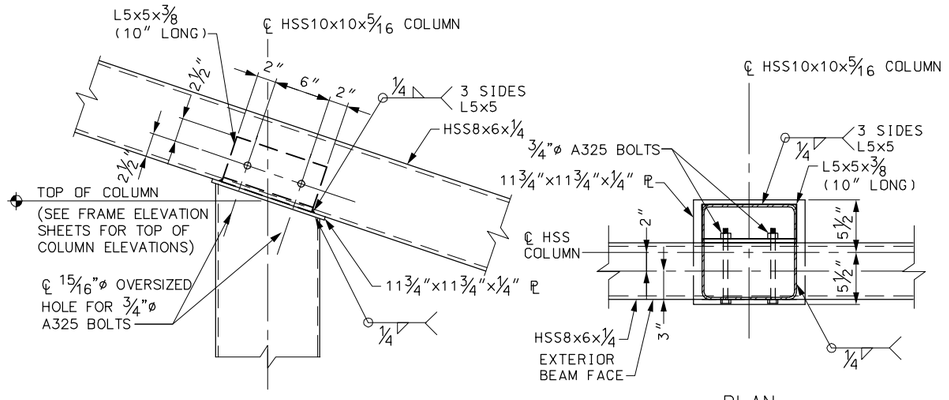

DETAIL (27) (27) SCALE: 1 1/2" = 1'-0" (S-123) (S-126)

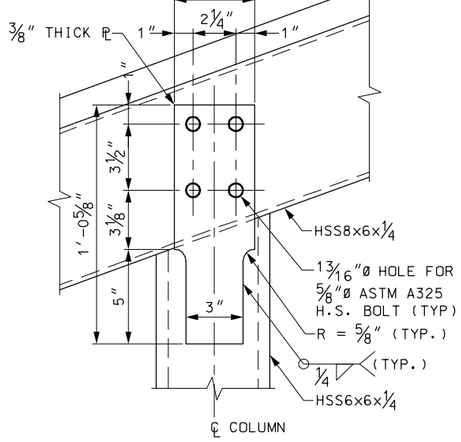

DETAIL (28) SCALE: 3" = 1'-0" (S-128)

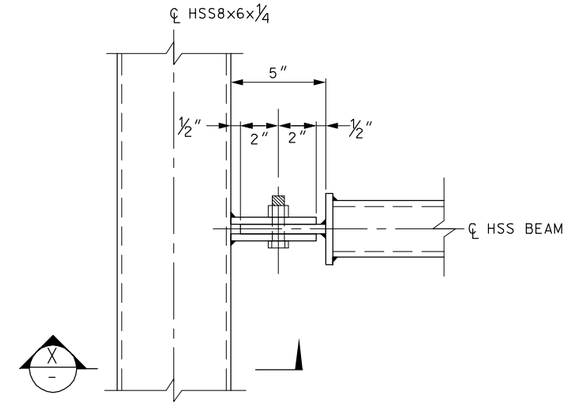

DETAIL (26) SCALE: 3" = 1'-0" (S-128)

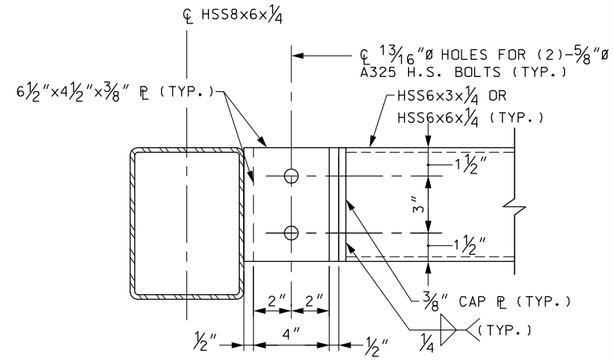

NOTE: STEEL ROOF DECK NOT SHOWN FOR CLARITY.

SECTION (X) SCALE: 3" = 1'-0" (-)

90% SUBMITTAL
NOT FOR CONSTRUCTION

FILE NAME: P:\MBTA\2009\E2X37800\CAD\700CADD\702STATIONS\South Acton\Structural\90% Submission\ 133-140_Steel_Dets.dwg
PLOT DATE: Sep 06, 2011 - 10:40am

MASSACHUSETTS BAY TRANSPORTATION AUTHORITY

FITCHBURG COMMUTER RAIL LINE
IMPROVEMENT PROJECT
CONTRACT NO. G67CN01

SOUTH ACTON STATION
STEEL DETAILS
SHEET 5

ISSUE	DATE	DESCRIPTION	BY	CHKD.	APP.

HNTB 300 APOLLO DRIVE CHELMSFORD, MA 01824 (978) 905-4000

PROJECT MANAGER Date

MASSACHUSETTS BAY TRANSPORTATION AUTHORITY

APPROVED BY:

PROJECT MANAGER Date

JACOBS 343 CONGRESS STREET BOSTON, MA 02110 (617) 242-9222

	DES. BY	DR. BY	CHK. BY
HORIZ: AS NOTED	DJM	DJM	
VERT: AS NOTED			
DATE: 9/8/11			

PLAN NO. S-137 ISSUE

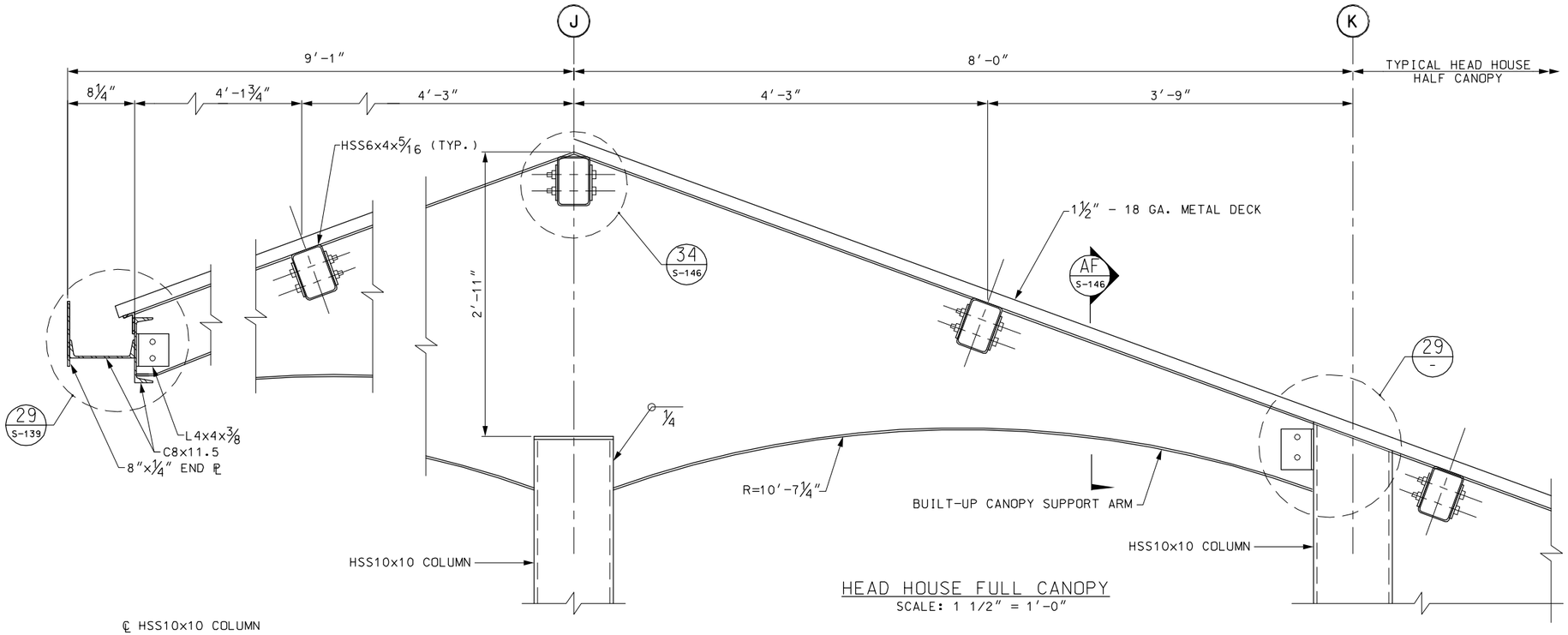

HEAD HOUSE FULL CANOPY
SCALE: 1 1/2″ = 1′-0″

NOTES:

1. FOR GENERAL NOTES, SEE SHEET S-100.
2. THE CONTRACTOR SHALL COORDINATE STRUCTURAL AND ARCHITECTURAL DRAWINGS. ANY DISCREPANCIES SHALL BE BROUGHT TO THE ATTENTION OF THE ENGINEER PRIOR TO STEEL FABRICATION.
3. ALL STEEL ELEMENTS SHALL BE HOT-DIP GALVANIZED UNLESS OTHERWISE NOTED.

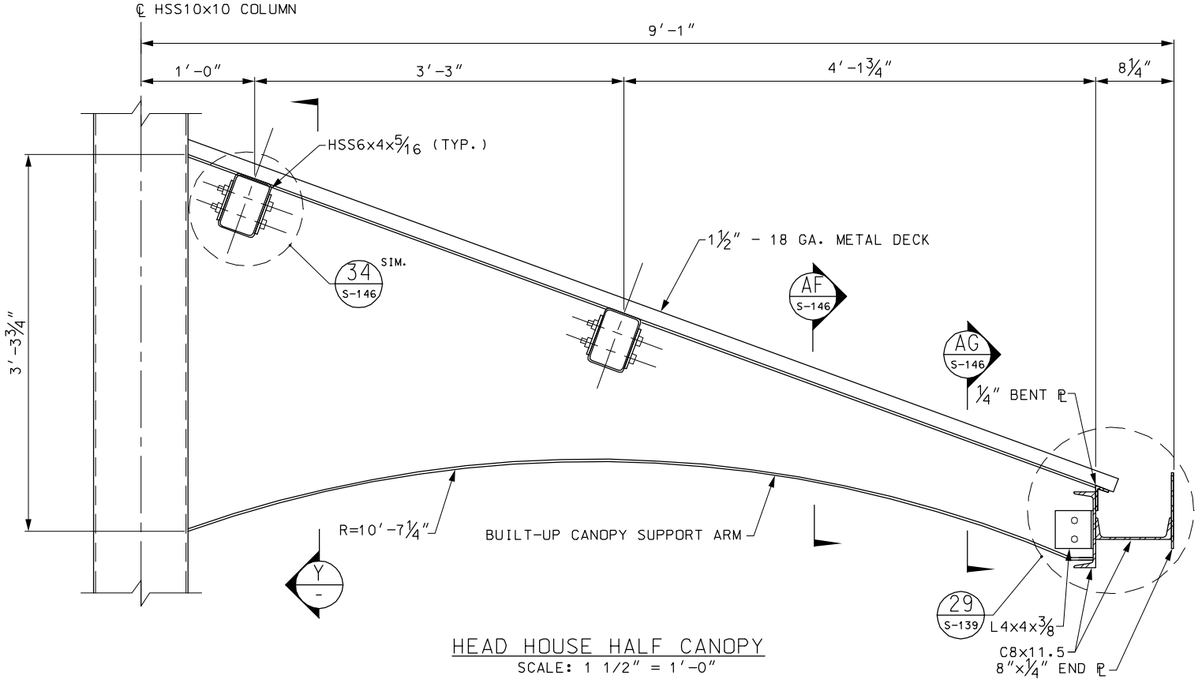

HEAD HOUSE HALF CANOPY
SCALE: 1 1/2″ = 1′-0″

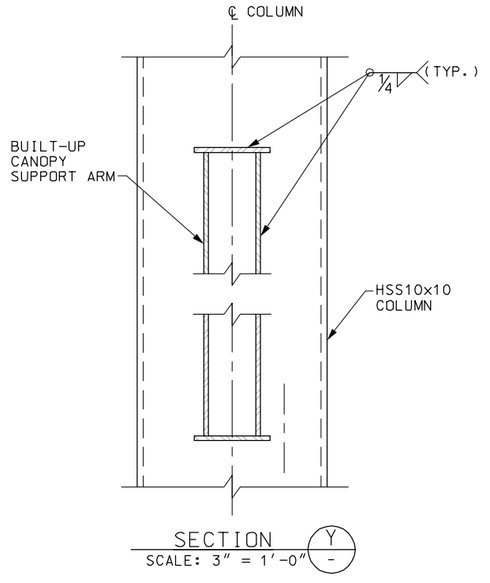

SECTION Y -
SCALE: 3″ = 1′-0″

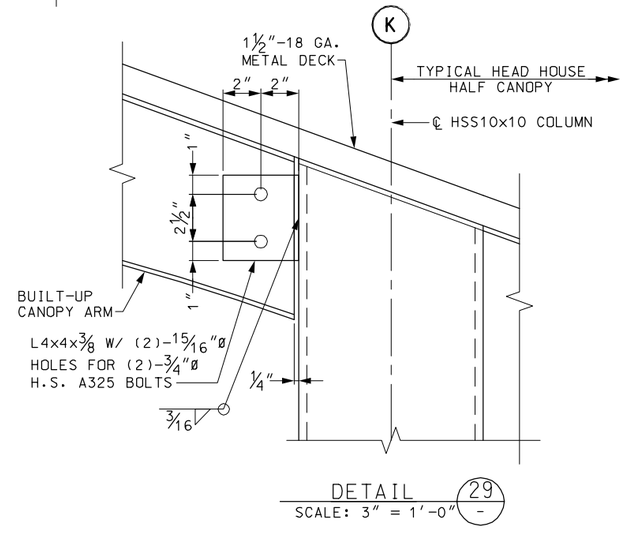

DETAIL 29 -
SCALE: 3″ = 1′-0″

90% SUBMITTAL
NOT FOR CONSTRUCTION

MASSACHUSETTS BAY TRANSPORTATION AUTHORITY

FITCHBURG COMMUTER RAIL LINE
IMPROVEMENT PROJECT
CONTRACT NO. G67CN01

SOUTH ACTON STATION
STEEL DETAILS
SHEET 6

ISSUE	DATE	DESCRIPTION	BY	CHKD.	APP.

HNTB 300 APOLLO DRIVE CHELMSFORD, MA 01824 (978) 905-4000
PROJECT MANAGER Date

MASSACHUSETTS BAY TRANSPORTATION AUTHORITY
APPROVED BY:
PROJECT MANAGER Date

JACOBS 343 CONGRESS STREET BOSTON, MA 02110 (617) 242-9222

HORIZ: AS NOTED	DES. BY	DR. BY	CHK. BY	PLAN NO.	ISSUE
VERT: AS NOTED	DJM	DJM			
DATE: 9/8/11				SHEET S-138	

FILE NAME: P:\MBTA\2008\E2X37800\CAD\700CADD\702STATIONS\South Acton\Structural\90% Submission\133-140_Steel_Dets.dwg
PLOT DATE: Sep 06, 2011 - 10:40am

NOTES:

1. FOR GENERAL NOTES, SEE SHEET S-100.
2. THE CONTRACTOR SHALL COORDINATE STRUCTURAL AND ARCHITECTURAL DRAWINGS. ANY DISCREPANCIES SHALL BE BROUGHT TO THE ATTENTION OF THE ENGINEER PRIOR TO STEEL FABRICATION.
3. ALL STEEL ELEMENTS SHALL BE HOT-DIP GALVANIZED UNLESS OTHERWISE NOTED.

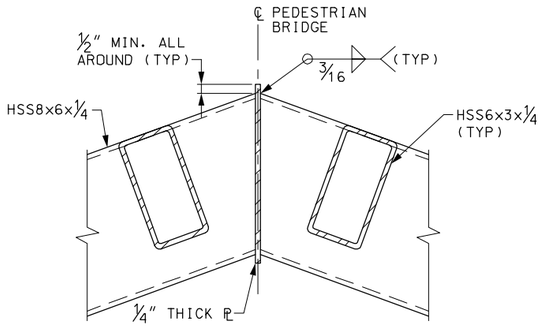

DETAIL 30 S-128
SCALE: 3" = 1'-0"

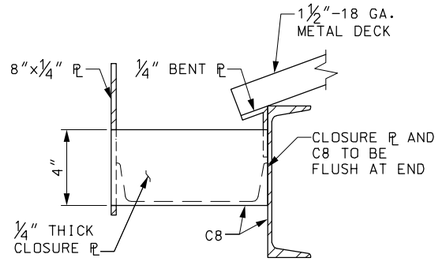

TYPICAL GUTTER CLOSURE PLATE DETAIL
SCALE: NOT TO SCALE

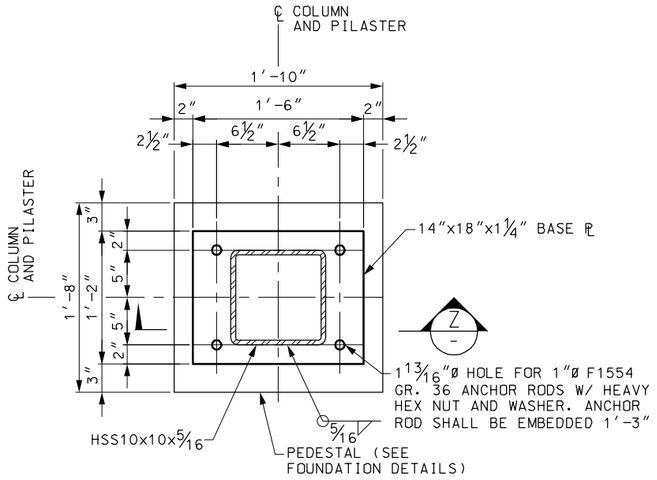

TYPICAL HSS10x10 COLUMN BASE PLATE DETAIL
SCALE: 1 1/2" = 1'-0"

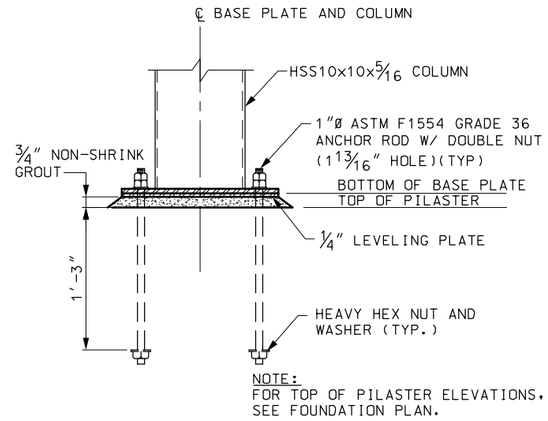

NOTE:
FOR TOP OF PILASTER ELEVATIONS, SEE FOUNDATION PLAN.

SECTION Z -
SCALE: 1 1/2" = 1'-0"

90% SUBMITTAL
NOT FOR CONSTRUCTION

ISSUE	DATE	DESCRIPTION	BY	CHKD.	APP.

JACOBS
343 CONGRESS STREET
BOSTON, MA 02110
(617) 242-9222

MASSACHUSETTS BAY TRANSPORTATION AUTHORITY

FITCHBURG COMMUTER RAIL LINE
IMPROVEMENT PROJECT
CONTRACT NO. G67CN01

SOUTH ACTON STATION
STEEL DETAILS
SHEET 7

HNTB
300 APOLLO DRIVE
CHELMSFORD, MA 01824
(978) 905-4000

PROJECT MANAGER Date

MASSACHUSETTS BAY TRANSPORTATION AUTHORITY
APPROVED BY:
PROJECT MANAGER Date

HORIZ: AS NOTED	DES. BY	DR. BY	CHK. BY	PLAN NO.	ISSUE
VERT: AS NOTED	DJM	DJM			
DATE: 9/8/11				SHEET S-139	

FILE NAME: P:\MBTA\2009\E2X37800\CAD\700CADD\702STATIONS\South Acton\Structural\90% Submission\133-140_Steel_Dets.dwg
PLOT DATE: Sep 06, 2011 - 10:40am

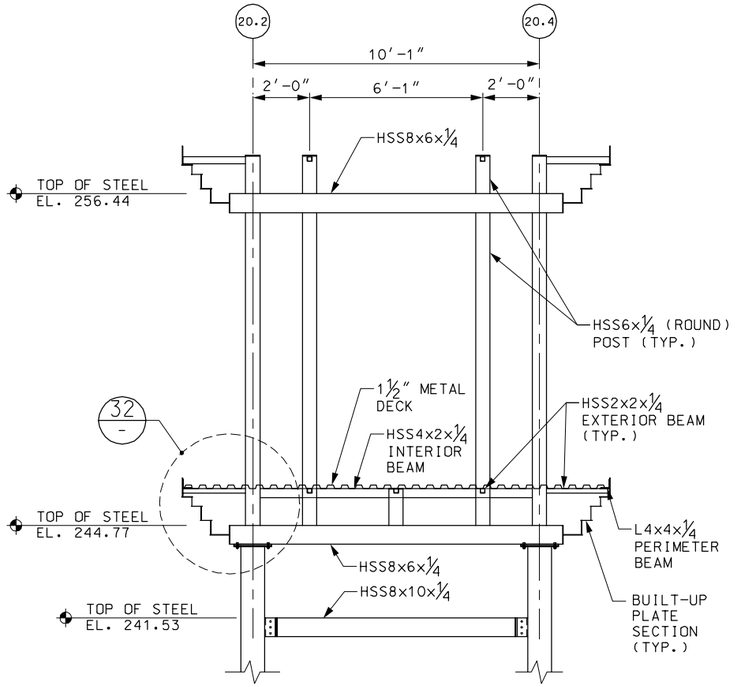

DETAIL 31 / x
SCALE: 3/8″ = 1′-0″

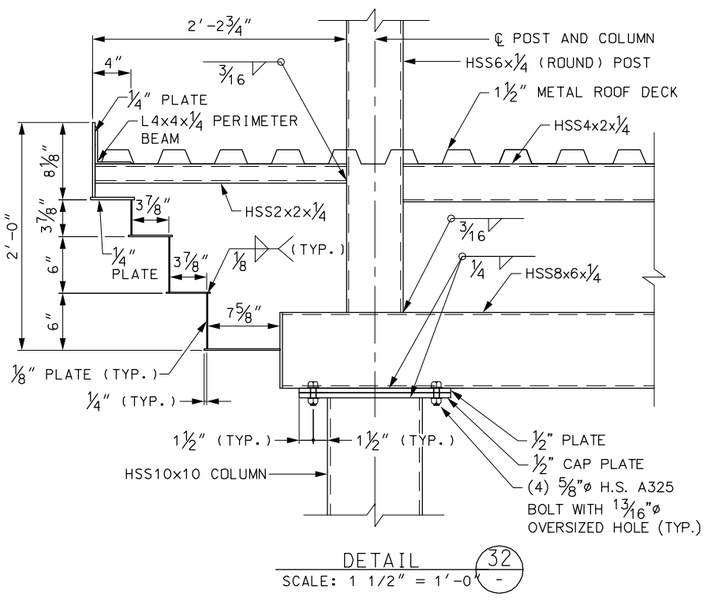

DETAIL 32 / –
SCALE: 1 1/2″ = 1′-0″

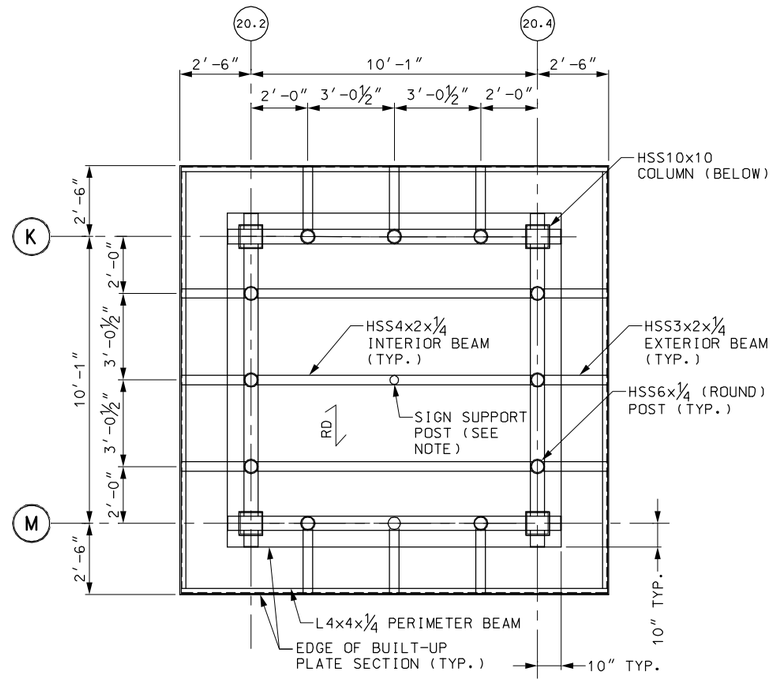

OUTBOUND HEAD HOUSE CAMPANILE DECK FRAMING
SCALE: 3/8″ = 1′-0″

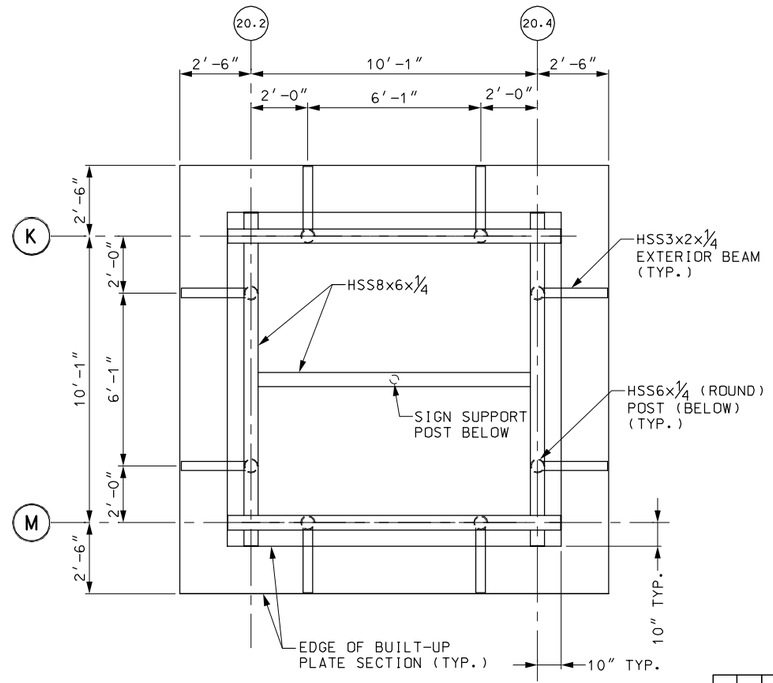

OUTBOUND HEAD HOUSE CAMPANILE ROOF FRAMING
SCALE: 3/8″ = 1′-0″

NOTES:

1. FOR GENERAL NOTES, SEE SHEET S-100.
2. THE CONTRACTOR SHALL COORDINATE STRUCTURAL AND ARCHITECTURAL DRAWINGS. ANY DISCREPANCIES SHALL BE BROUGHT TO THE ATTENTION OF THE ENGINEER PRIOR TO STEEL FABRICATION.
3. ALL STEEL ELEMENTS SHALL BE HOT-DIP GALVANIZED UNLESS OTHERWISE NOTED.
4. CONNECTION DETAILS FOR ATTACHMENT OF MBTA LOGO SIGN TO HSS BEAMS SHALL BE PROVIDED BY SIGN MANUFACTURER.

90% SUBMITTAL
NOT FOR CONSTRUCTION

FILE NAME: P:\MBTA\2008\E2X3780\CAD\700CADD\702STATIONS\South Acton\Structural\90% Submission\ 133-140_SteelDets.dwg
PLOT DATE: Sep 06, 2011 – 10:40am

MASSACHUSETTS BAY TRANSPORTATION AUTHORITY
FITCHBURG COMMUTER RAIL LINE
IMPROVEMENT PROJECT
CONTRACT NO. G67CN01

SOUTH ACTON STATION
STEEL DETAILS
SHEET 8

ISSUE	DATE	DESCRIPTION	BY	CHKD.	APP.

HNTB 300 APOLLO DRIVE CHELMSFORD, MA 01824 (978) 905-4000
PROJECT MANAGER Date

MASSACHUSETTS BAY TRANSPORTATION AUTHORITY
APPROVED BY:
PROJECT MANAGER Date

JACOBS 343 CONGRESS STREET BOSTON, MA 02110 (617) 242-9222

HORIZ: AS NOTED	DES. BY	DR. BY	CHK. BY	PLAN NO.	ISSUE
VERT: AS NOTED	DJM	DJM			
DATE: 9/8/11				SHEET S-140	

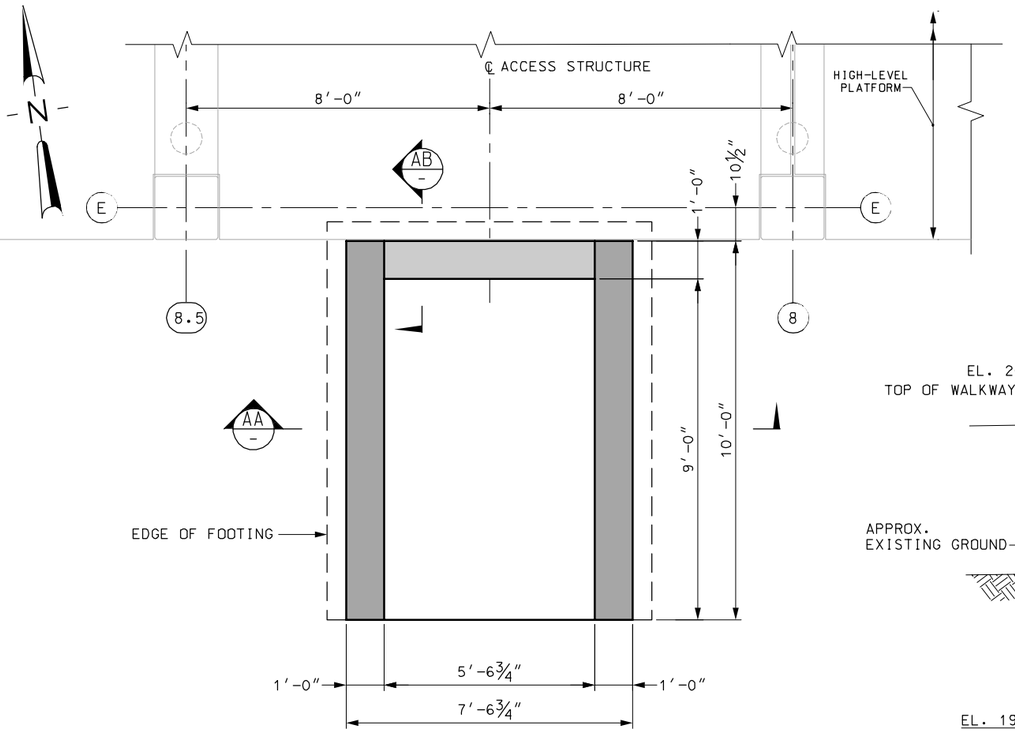

PLAN
SCALE: 1/2″ = 1′-0″

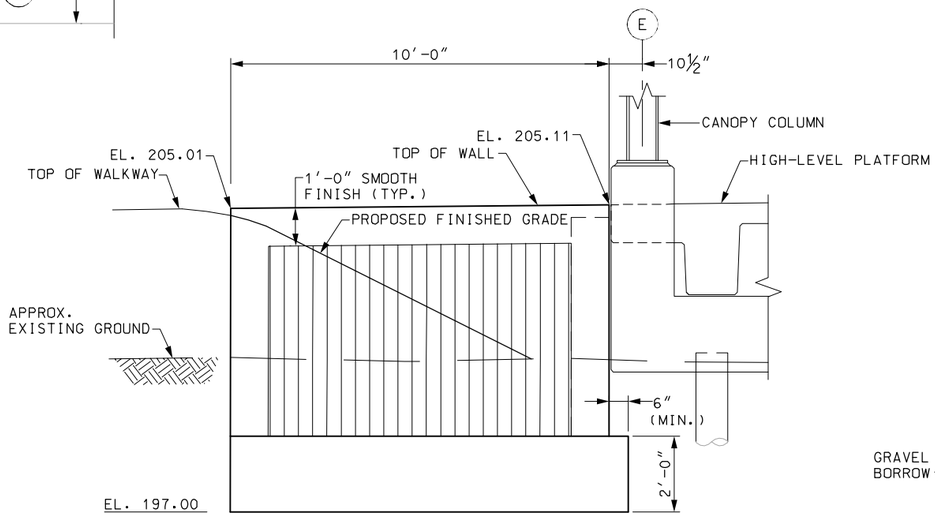

ELEVATION
SCALE: 1/2″ = 1′-0″

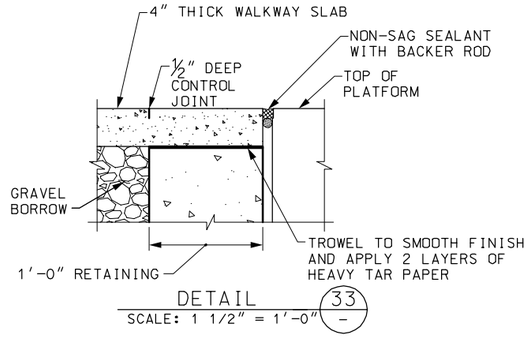

DETAIL 33
SCALE: 1 1/2″ = 1′-0″

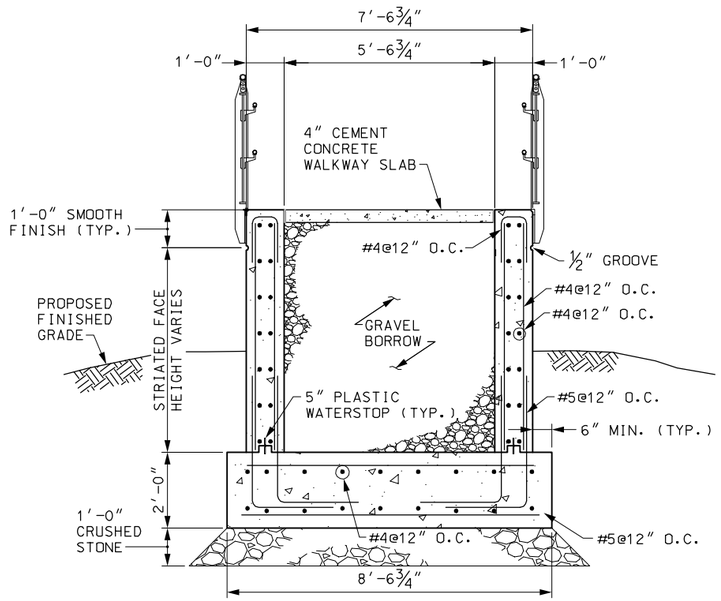

SECTION AA
SCALE: 1/2″ = 1′-0″

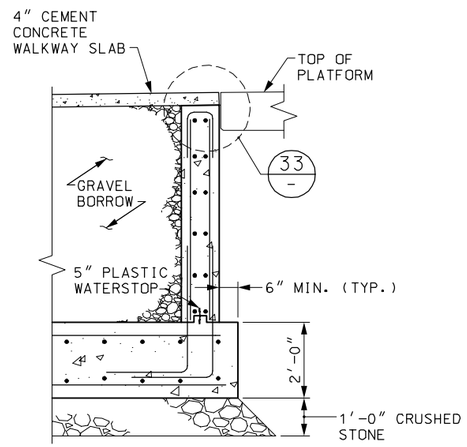

SECTION AB
SCALE: 1/2″ = 1′-0″

NOTES:

1. FOR GENERAL NOTES, SEE SHEETS S-100 AND S-101.
2. FOR TOP OF WALKWAY ELEVATIONS, SEE CIVIL PLANS.
3. FOR ADDITIONAL DETAILS, SEE ARCHITECTURAL PLANS.
4. LIMITS OF CANOPY NOT SHOWN FOR CLARITY.

90% SUBMITTAL
NOT FOR CONSTRUCTION

MASSACHUSETTS BAY TRANSPORTATION AUTHORITY

FITCHBURG COMMUTER RAIL LINE
IMPROVEMENT PROJECT
CONTRACT NO. G67CN01

SOUTH ACTON STATION
INBOUND ACCESS STRUCTURE
FROM MAPLE STREET

ISSUE	DATE	DESCRIPTION	BY	CHKD.	APP.

HNTB — 300 APOLLO DRIVE, CHELMSFORD, MA 01824, (978) 905-4000
PROJECT MANAGER Date

MASSACHUSETTS BAY TRANSPORTATION AUTHORITY
APPROVED BY:
PROJECT MANAGER Date

JACOBS — 343 CONGRESS STREET, BOSTON, MA 02110, (617) 242-9222

HORIZ: AS NOTED	DES. BY	DR. BY	CHK. BY	PLAN NO.	ISSUE
VERT: AS NOTED	JAG	JAG	MWT		
DATE: 9/8/11				SHEET S-141	

FILE NAME: P:\MBTA\2009\E2X37800\CAD\700CADD\702STATIONS\South Acton\Structural\90% Submission\ 141_In_MapleSt.dwg
PLOT DATE: Sep 06, 2011 - 10:40am

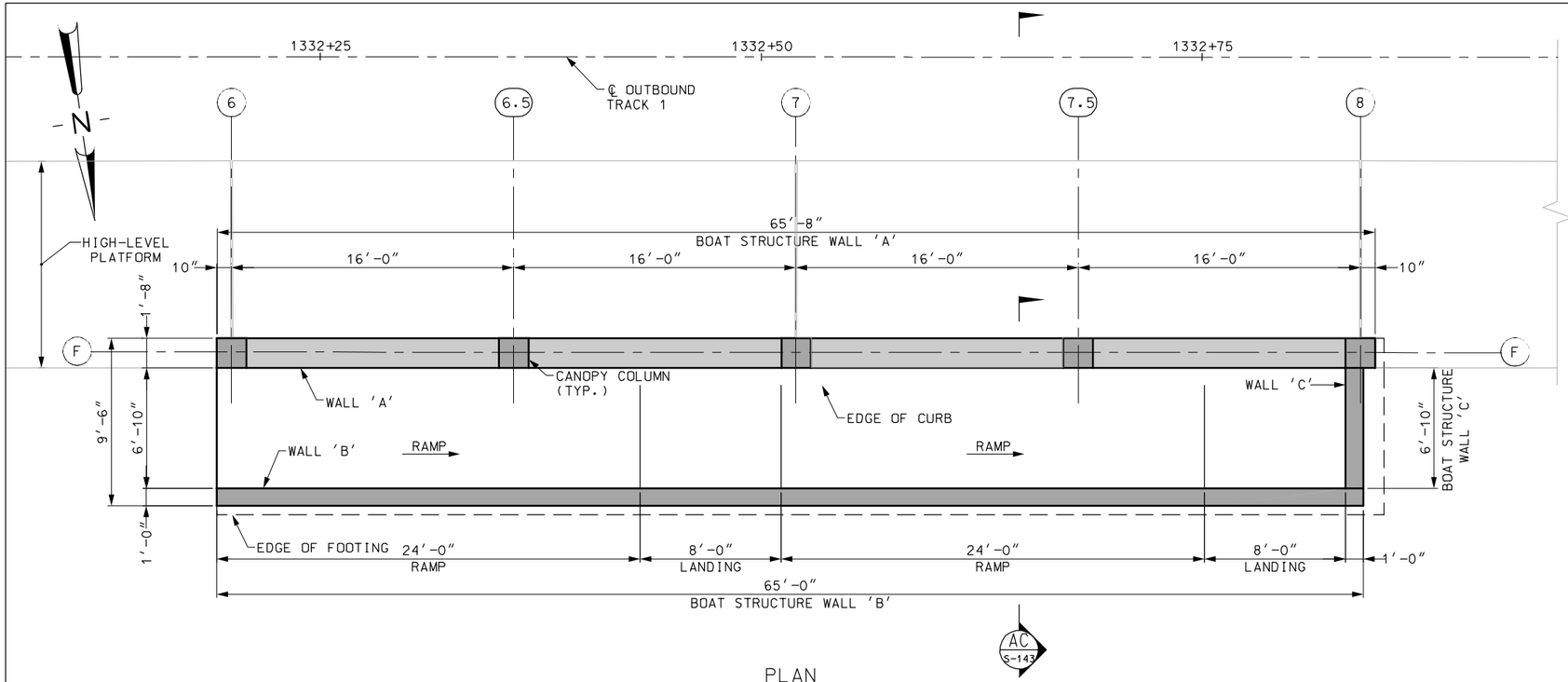

PLAN
SCALE: 1/4″ = 1′-0″

NOTES:

1. FOR GENERAL NOTES, SEE SHEET S-100.
2. LIMITS OF CANOPY NOT SHOWN FOR CLARITY.
3. SEE CIVIL PLANS FOR WALKWAY ELEVATIONS.
4. STATION AND OFFSET DATA TAKEN ALONG FRONT FACE OF WALL.
5. WALL DIMENSIONS ARE TAKEN ALONG FRONT FACE OF WALL.

LEGEND:

▥ – STRIATED CONCRETE SURFACE

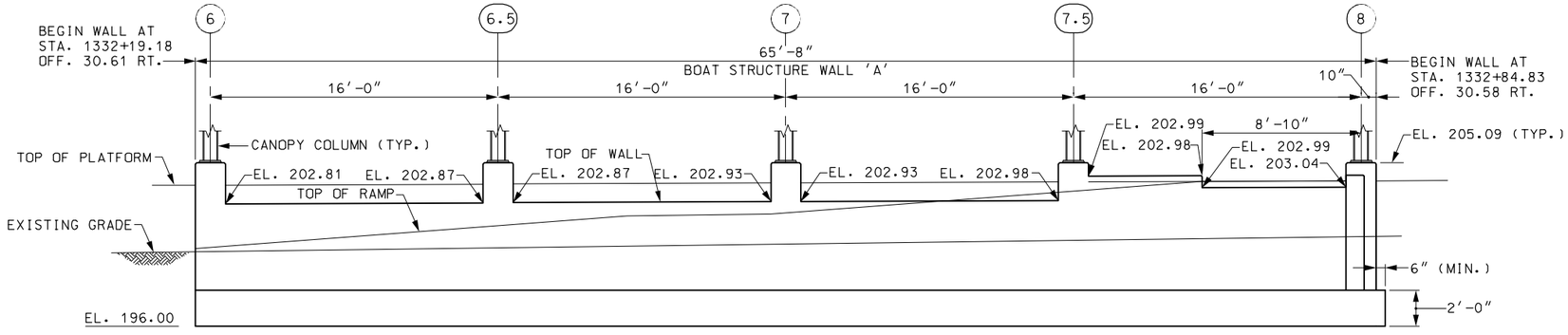

ELEVATION – BOAT STRUCTURE WALL 'A'
SCALE: 1/4″ = 1′-0″

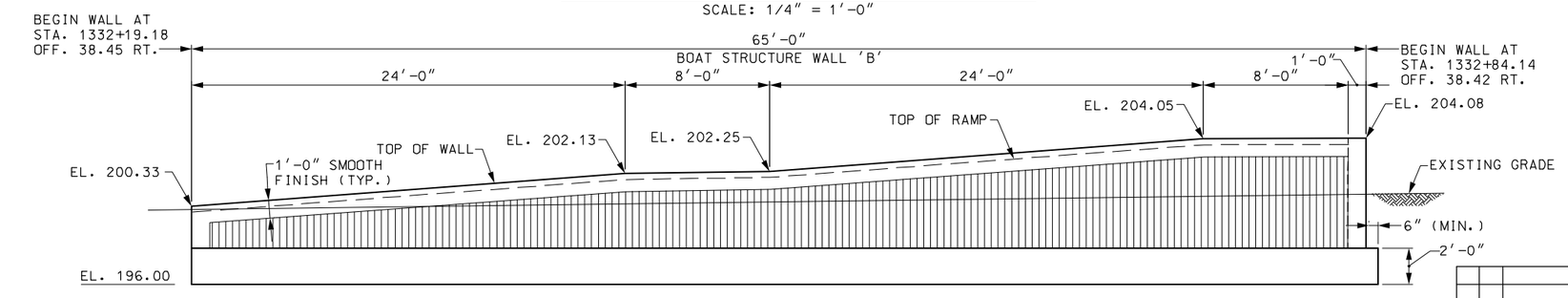

ELEVATION – BOAT STRUCTURE WALL 'B'
SCALE: 1/4″ = 1′-0″

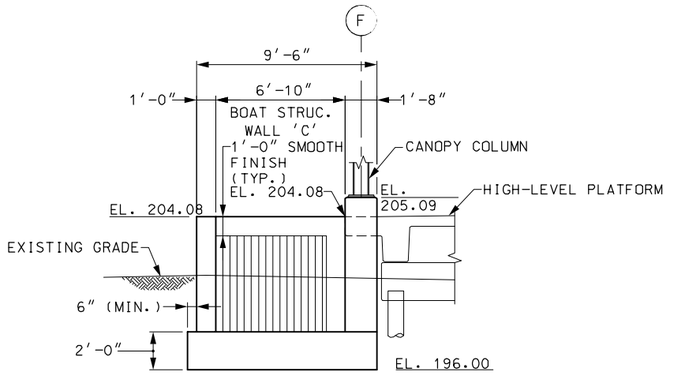

ELEVATION – BOAT STRUCTURE WALL 'C'
SCALE: 1/4″ = 1′-0″

90% SUBMITTAL
NOT FOR CONSTRUCTION

MASSACHUSETTS BAY TRANSPORTATION AUTHORITY
FITCHBURG COMMUTER RAIL LINE IMPROVEMENT PROJECT
CONTRACT NO. G67CN01

SOUTH ACTON STATION OUTBOUND ACCESS RAMP FROM RAILROAD STREET

ISSUE	DATE	DESCRIPTION	BY	CHKD.	APP.

HNTB 300 APOLLO DRIVE CHELMSFORD, MA 01824 (978) 905-4000

PROJECT MANAGER Date

MASSACHUSETTS BAY TRANSPORTATION AUTHORITY
APPROVED BY:
PROJECT MANAGER Date

JACOBS 343 CONGRESS STREET BOSTON, MA 02110 (617) 242-9222

HORIZ: AS NOTED	DES. BY	DR. BY	CHK. BY	PLAN NO.	ISSUE
VERT: AS NOTED	JAG	JAG	MWT		
DATE: 9/8/11				SHEET S-142	

FILE NAME: P:\MBTA\2008\E2X37800\CAD\700CADD\702STATIONS\South Acton\Structural\90% Submission\ 142_Out_RailroadSt.dwg
PLOT DATE: Sep 06, 2011 - 10:40am

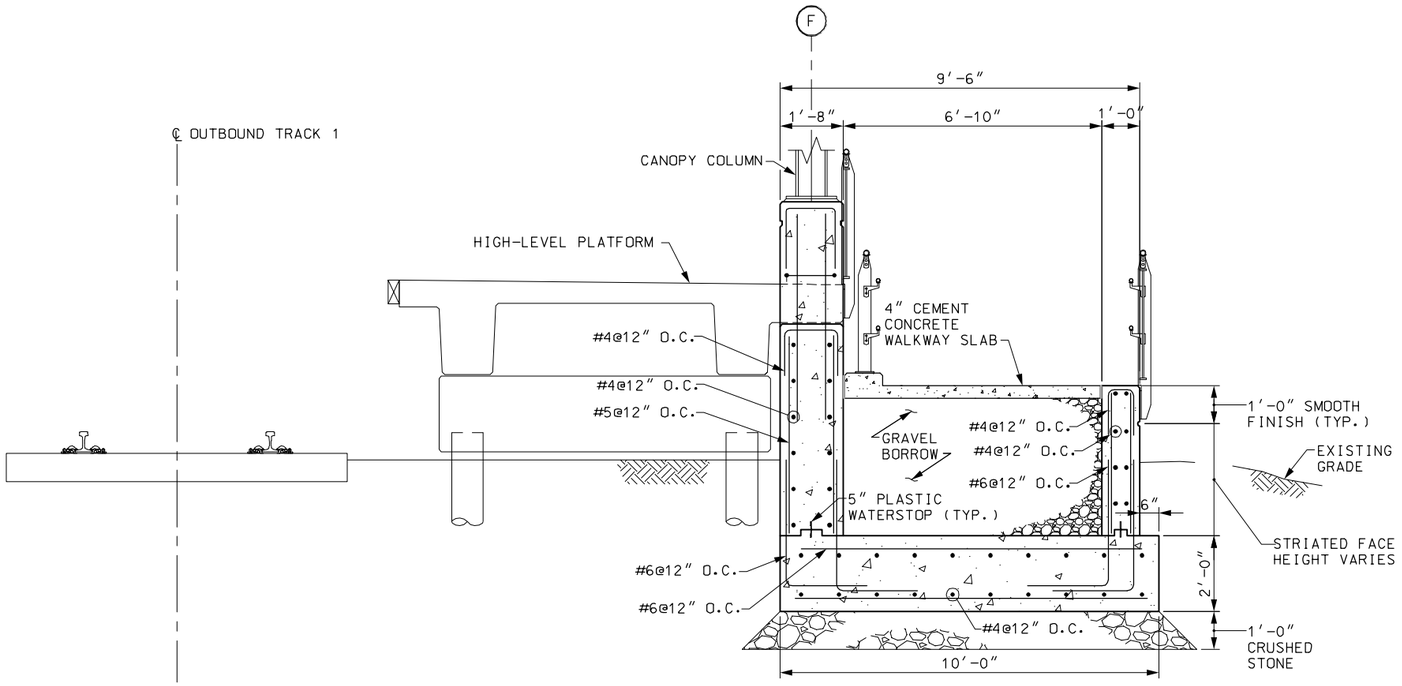

SECTION AC
SCALE: 1/2″ = 1′-0″ –

NOTES:

1. FOR GENERAL NOTES, SEE SHEETS S-100 AND S-101.
2. FOR TOP OF WALKWAY ELEVATIONS, SEE CIVIL PLANS.
3. FOR ADDITIONAL DETAILS, SEE ARCHITECTURAL PLANS.
4. LIMITS OF CANOPY NOT SHOWN FOR CLARITY.

90% SUBMITTAL
NOT FOR CONSTRUCTION

ISSUE	DATE	DESCRIPTION	BY	CHKD.	APP.

JACOBS
343 CONGRESS STREET
BOSTON, MA 02110
(617) 242-9222

MASSACHUSETTS BAY TRANSPORTATION AUTHORITY

FITCHBURG COMMUTER RAIL LINE
IMPROVEMENT PROJECT
CONTRACT NO. G67CN01

SOUTH ACTON STATION
OUTBOUND RAMP STRUCTURE
FROM RAILROAD STREET – SECTION

HNTB
300 APOLLO DRIVE
CHELMSFORD, MA 01824
(978) 905-4000

PROJECT MANAGER Date

MASSACHUSETTS BAY TRANSPORTATION AUTHORITY
APPROVED BY:
PROJECT MANAGER Date

HORIZ: AS NOTED	DES. BY	DR. BY	CHK. BY
VERT: AS NOTED	JAG	JAG	MWT
DATE: 9/8/11			

PLAN NO.
SHEET S-143
ISSUE

FILE NAME: P:\MBTA\2008\E2X37800\CAD\700CADD\702STATIONS\South Acton\Structural\90% Submission\ 143_Out_Sections.dwg
PLOT DATE: Sep 06, 2011 – 10:40am

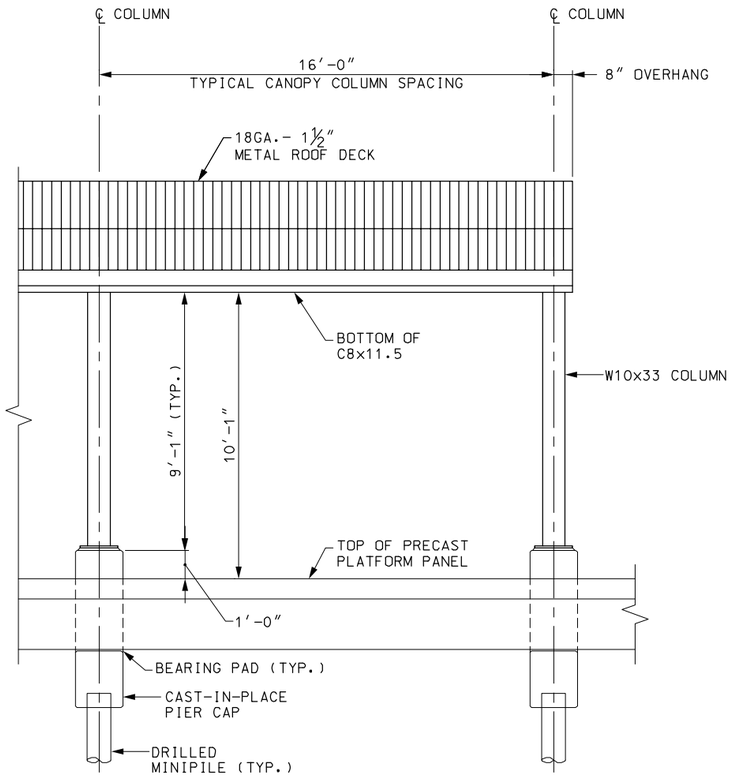

PLATFORM CANOPY ELEVATION
SCALE: 3/8″ = 1′-0″

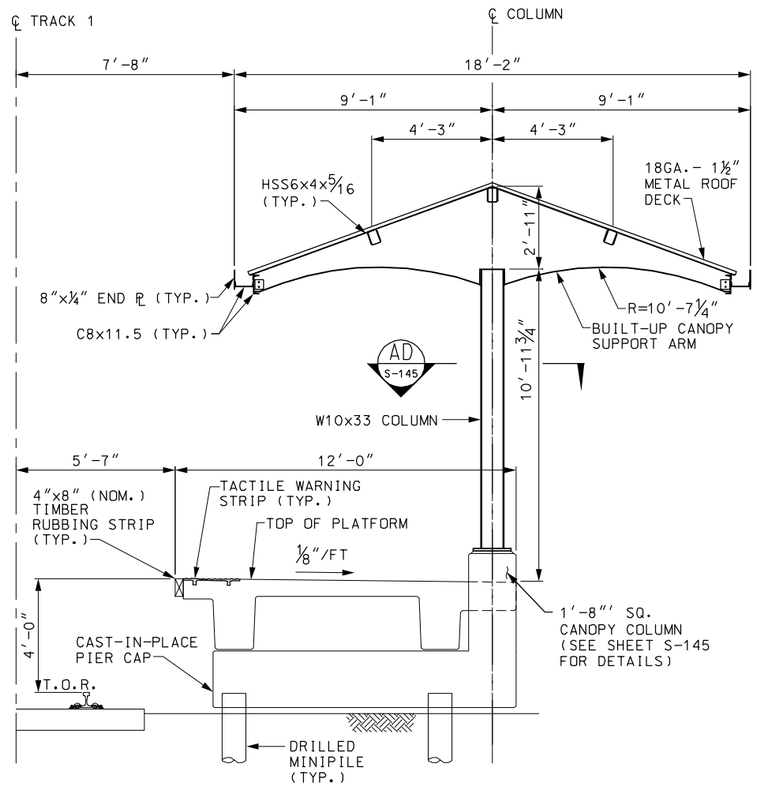

FULL PLATFORM CANOPY CROSS SECTION
SCALE: 3/8″ = 1′-0″

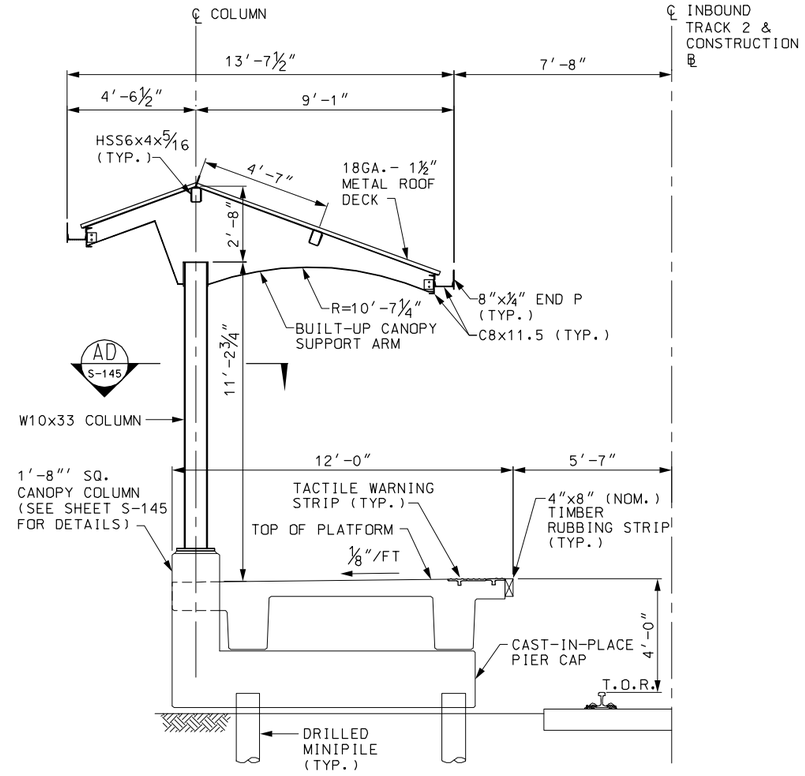

NARROW PLATFORM CANOPY CROSS SECTION
SCALE: 3/8″ = 1′-0″

NOTES:

1. FOR GENERAL STRUCTURAL NOTES, SEE SHEETS S-100 AND S-101.
2. THE CONTRACTOR SHALL COORDINATE STRUCTURAL AND ARCHITECTURAL DRAWINGS. ANY DISCREPANCIES SHALL BE BROUGHT TO THE ATTENTION OF THE ENGINEER BEFORE STEEL FABRICATION BEGINS.
3. FOR SIGN, COMMUNICATIONS AND LIGHTING DETAILS REFER TO ARCHITECTURAL AND ELECTRICAL PLANS.
4. ALL STEEL ELEMENTS SHALL BE HOT-DIP GALVANIZED, THEN PAINTED BLACK (PER CONTRACT SPECIFICATIONS) UNLESS OTHERWISE NOTED.
5. FOR ADDITIONAL CANOPY DETAILS AND CANOPY LAYOUT REFER TO THE ARCHITECTURAL, CIVIL AND ELECTRICAL PLANS.
6. FOR PLATFORM LAYOUT AND DETAILS SEE SHEETS S-106 THROUGH S-108 AND S-112 THROUGH S-115.
7. FOR CANOPY FOUNDATION DETAILS, SEE SHEET S-111.

90% SUBMITTAL
NOT FOR CONSTRUCTION

ISSUE	DATE	DESCRIPTION	BY	CHKD.	APP.

JACOBS
343 CONGRESS STREET
BOSTON, MA 02110
(617) 242-9222

MASSACHUSETTS BAY TRANSPORTATION AUTHORITY

FITCHBURG COMMUTER RAIL LINE
IMPROVEMENT PROJECT
CONTRACT NO. G67CN01

SOUTH ACTON STATION
PLATFORM CANOPY DETAILS
SHEET 1

HNTB
300 APOLLO DRIVE
CHELMSFORD, MA 01824
(978) 905-4000

PROJECT MANAGER Date

MASSACHUSETTS BAY TRANSPORTATION AUTHORITY
APPROVED BY:
PROJECT MANAGER Date

HORIZ: AS NOTED	DES. BY	DR. BY	CHK. BY	PLAN NO.	ISSUE
VERT: AS NOTED	DJM	DJM	MWT		
DATE: 9/8/11				SHEET S-144	

FILE NAME: P:\MBTA\2008\E2X37800\CAD\700CADD\702STATIONS\South Acton\Structural\90% Submission\ 144-147_Canopy_Dets.dwg
PLOT DATE: Sep 06, 2011 - 10:40am

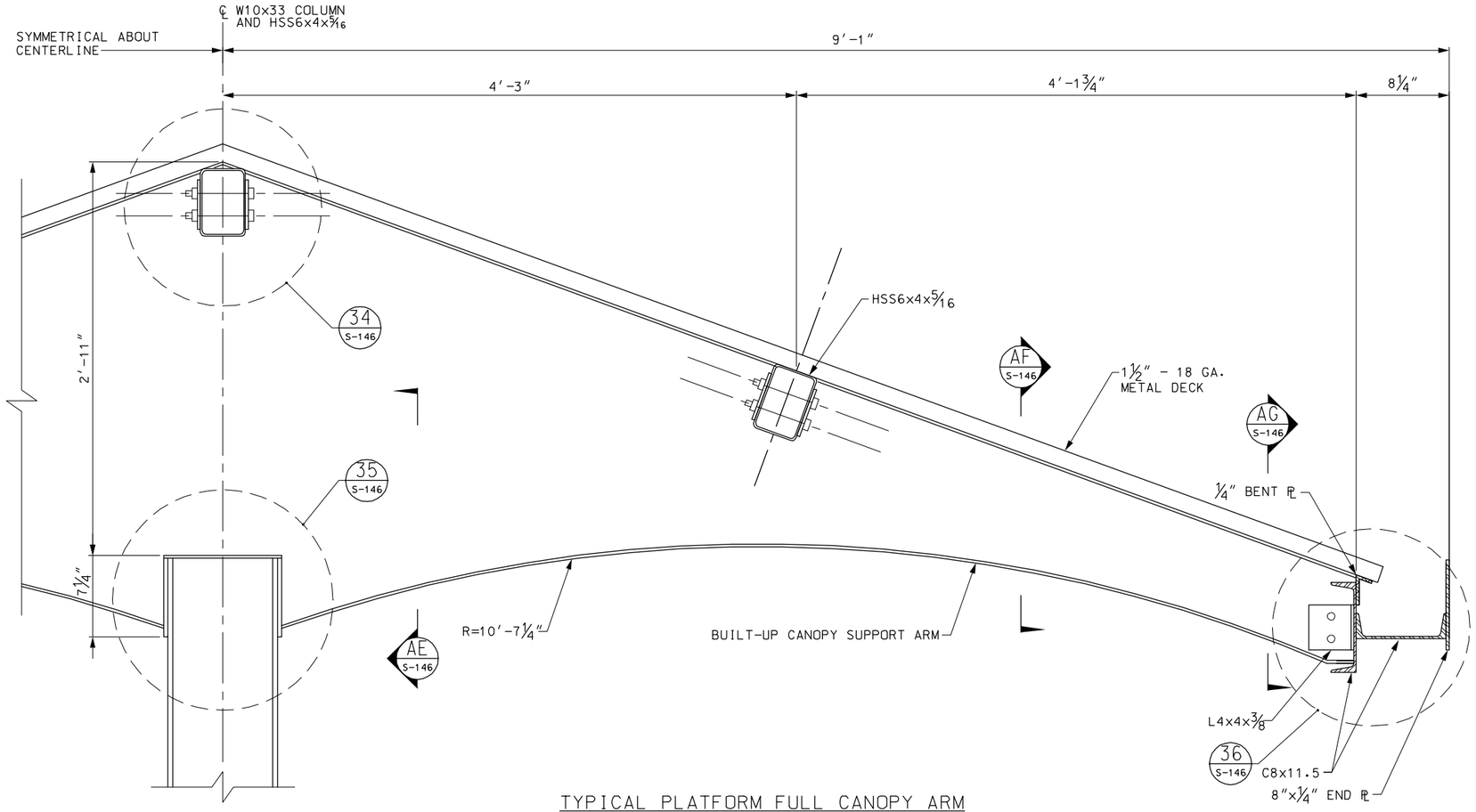

TYPICAL PLATFORM FULL CANOPY ARM
SCALE: 2" = 1'-0"

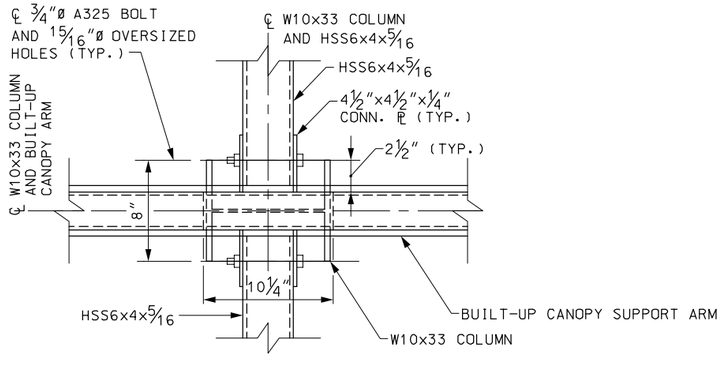

NOTE:
METAL DECK NOT SHOWN FOR CLARITY

PART PLAN AT END CANOPY ARM
SCALE: 2" = 1'-0"

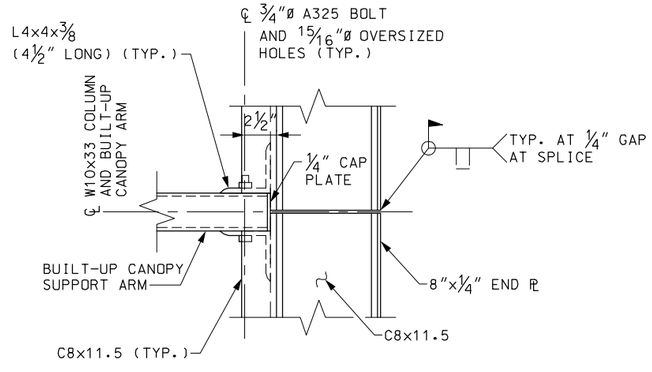

NOTE:
1½" - 18 GA. METAL DECK NOT SHOWN FOR CLARITY

PART PLAN AT CANOPY ARM SUPPORT
SCALE: 2" = 1'-0"

NOTES:

1. FOR GENERAL STRUCTURAL NOTES, SEE SHEETS S-100 AND S-101.
2. FOR CANOPY FOUNDATION DETAILS, SEE SHEET S-111.
3. FOR ADDITIONAL DETAILS SEE ARCHITECTURAL DRAWINGS.

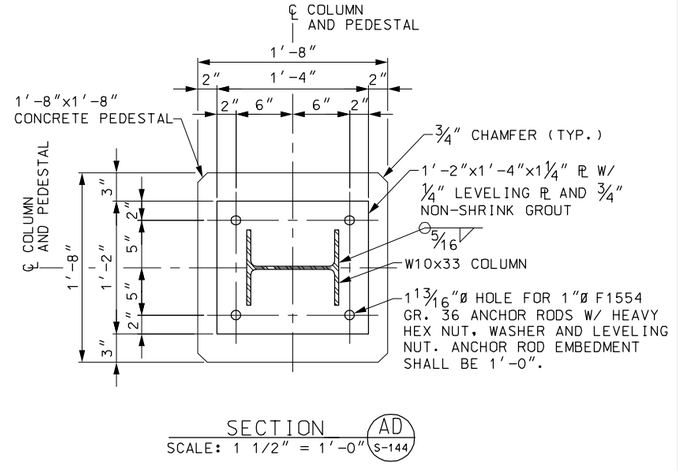

SECTION AD S-144
SCALE: 1 1/2" = 1'-0"

90% SUBMITTAL
NOT FOR CONSTRUCTION

ISSUE	DATE	DESCRIPTION	BY	CHKD.	APP.

JACOBS 343 CONGRESS STREET BOSTON, MA 02110 (617) 242-9222

HNTB 300 APOLLO DRIVE CHELMSFORD, MA 01824 (978) 905-4000

PROJECT MANAGER Date

MASSACHUSETTS BAY TRANSPORTATION AUTHORITY

APPROVED BY:

PROJECT MANAGER Date

MASSACHUSETTS BAY TRANSPORTATION AUTHORITY

FITCHBURG COMMUTER RAIL LINE
IMPROVEMENT PROJECT
CONTRACT NO. G67CN01

SOUTH ACTON STATION
PLATFORM CANOPY DETAILS
SHEET 2

	DES. BY	DR. BY	CHK. BY
HORIZ: AS NOTED	DJM	DJM	MWT
VERT: AS NOTED			
DATE: 9/8/11			

PLAN NO.

SHEET S-145

ISSUE

FILE NAME: P:\MBTA\2009\E2X37800\CAD\700CADD\702STATIONS\South Acton\Structural\90% Submission\ 144-147_Canopy_Dets.dwg
PLOT DATE: Sep 06, 2011 - 10:40am

NOTES:

1. FOR GENERAL STRUCTURAL NOTES, SEE SHEETS S-100 AND S-101.
2. FOR ADDITIONAL DETAILS SEE ARCHITECTURAL DRAWINGS.

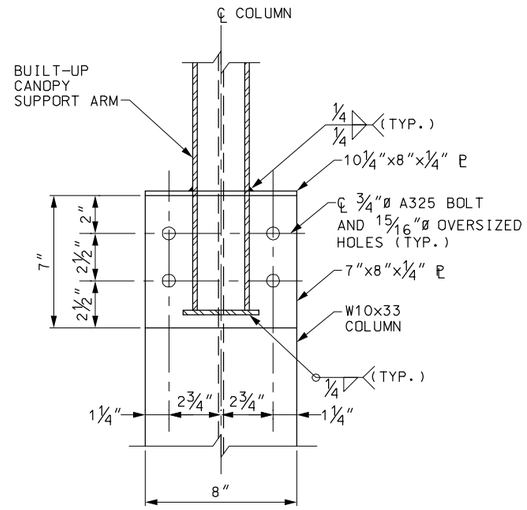

SECTION AE SCALE: 3" = 1'-0" S-145

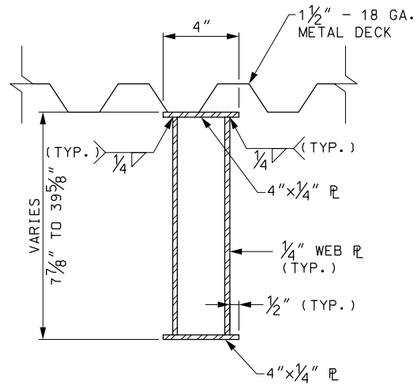

SECTION AF SCALE: 3" = 1'-0" S-145

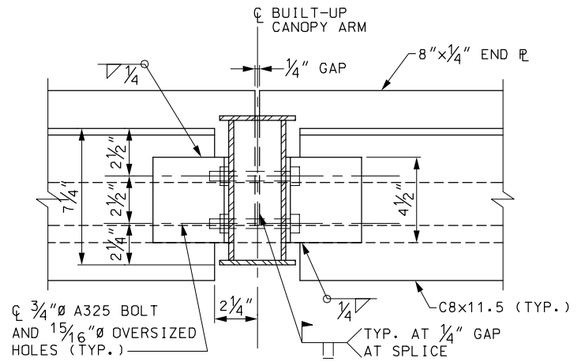

SECTION AG SCALE: 3" = 1'-0" S-145

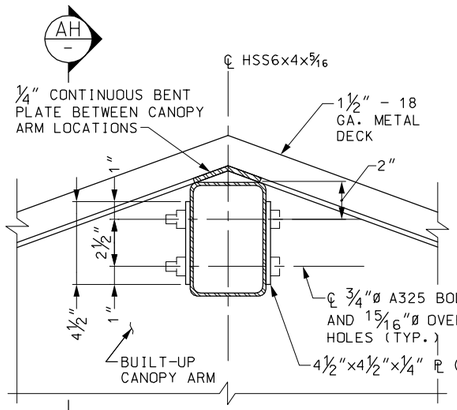

DETAIL 34 SCALE: 3" = 1'-0" S-145

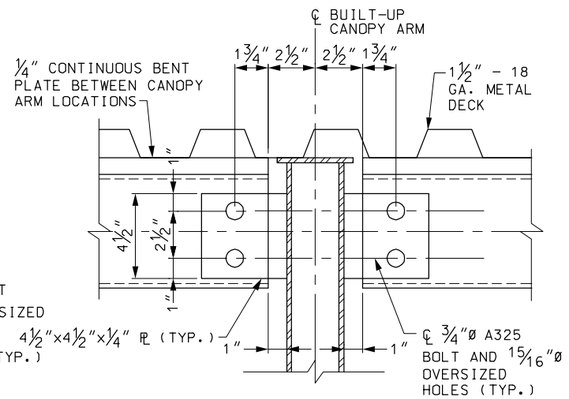

SECTION AH - SCALE: 3" = 1'-0"

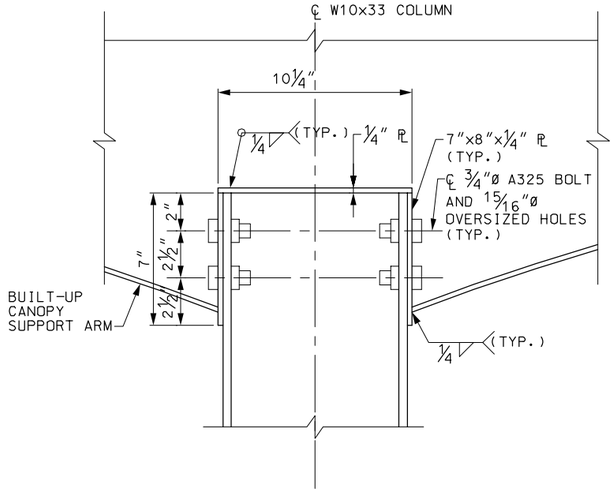

DETAIL 35 SCALE: 3" = 1'-0" S-145

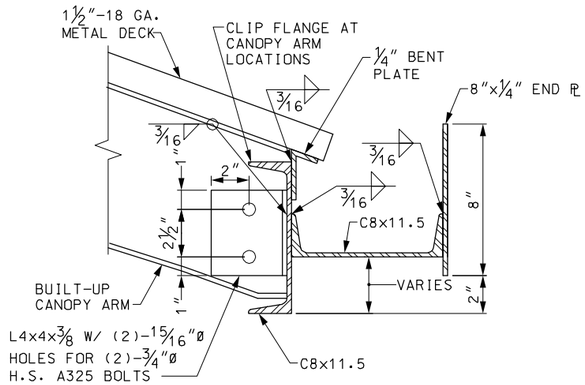

DETAIL 36 SCALE: 3" = 1'-0" S-145

90% SUBMITTAL
NOT FOR CONSTRUCTION

FILE NAME: P:\MBTA\2008\E2X37800\CAD\700CADD\702STATIONS\South Acton\Structural\90% Submission\ 144-147_Canopy_Dets.dwg
PLOT DATE: Sep 06, 2011 - 10:40am

MASSACHUSETTS BAY TRANSPORTATION AUTHORITY

FITCHBURG COMMUTER RAIL LINE
IMPROVEMENT PROJECT
CONTRACT NO. G67CN01

SOUTH ACTON STATION
PLATFORM CANOPY DETAILS
SHEET 3

ISSUE	DATE	DESCRIPTION	BY	CHKD.	APP.

HNTB 300 APOLLO DRIVE CHELMSFORD, MA 01824 (978) 905-4000

PROJECT MANAGER Date

MASSACHUSETTS BAY TRANSPORTATION AUTHORITY
APPROVED BY:
PROJECT MANAGER Date

JACOBS 343 CONGRESS STREET BOSTON, MA 02110 (617) 242-9222

	DES. BY	DR. BY	CHK. BY	
HORIZ: AS NOTED	DJM	DJM	MWT	PLAN NO.
VERT: AS NOTED				ISSUE
DATE: 9/8/11				SHEET S-146

NOTES:

1. FOR GENERAL STRUCTURAL NOTES, SEE SHEETS S-100 AND S-101.
2. FOR ADDITIONAL DETAILS SEE ARCHITECTURAL DRAWINGS.

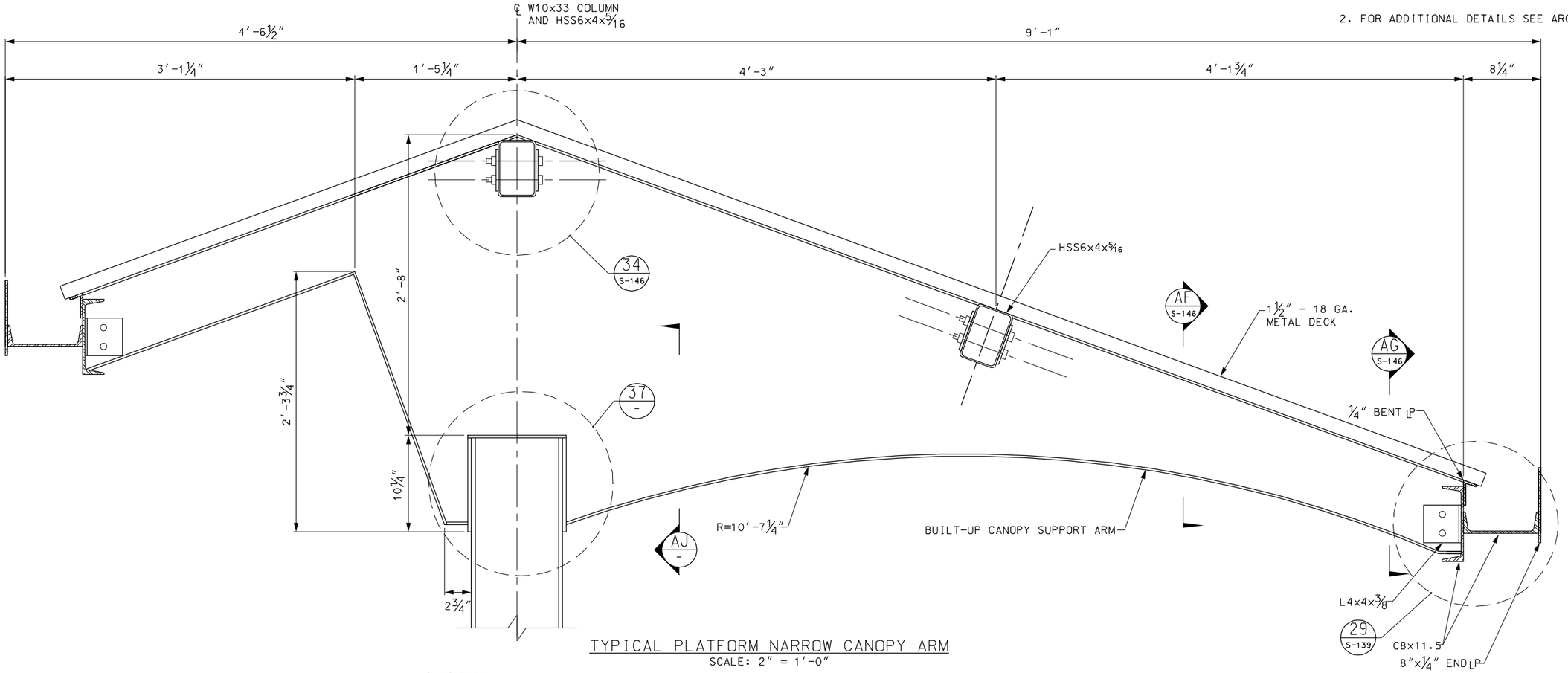

TYPICAL PLATFORM NARROW CANOPY ARM
SCALE: 2″ = 1′-0″

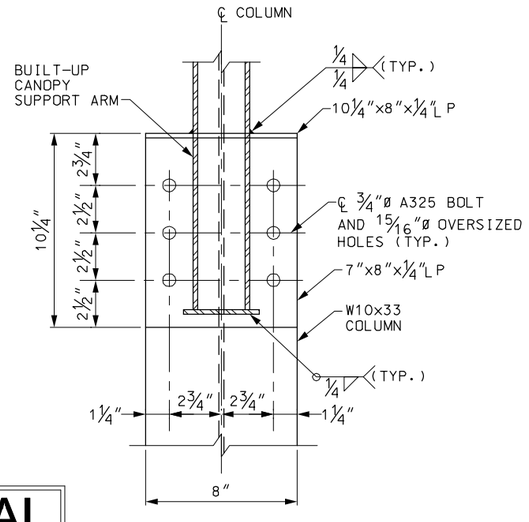

SECTION AJ -
SCALE: 3″ = 1′-0″

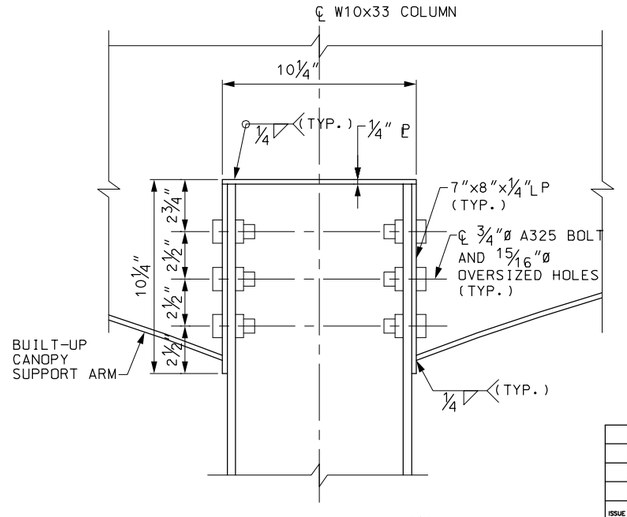

DETAIL 37 -
SCALE: 3″ = 1′-0″

90% SUBMITTAL
NOT FOR CONSTRUCTION

ISSUE	DATE	DESCRIPTION	BY	CHK'D.	APP.

JACOBS 343 CONGRESS STREET BOSTON, MA 02110 (617) 242-9222

HNTB 300 APOLLO DRIVE CHELMSFORD, MA 01824 (978) 905-4000

PROJECT MANAGER Date

MASSACHUSETTS BAY TRANSPORTATION AUTHORITY

APPROVED BY:

PROJECT MANAGER Date

	DES. BY	DR. BY	CHK. BY
HORIZ: AS NOTED	DJM	DJM	MWT
VERT: AS NOTED			
DATE: 9/8/11			

PLAN NO. ISSUE

SHEET S-147

MASSACHUSETTS BAY TRANSPORTATION AUTHORITY

FITCHBURG COMMUTER RAIL LINE IMPROVEMENT PROJECT CONTRACT NO. G67CN01

SOUTH ACTON STATION PLATFORM CANOPY DETAILS SHEET 4

FILE NAME: P:\MBTA\2008\E2X37800\CAD\700CADD\702STATIONS\South Acton\Structural\90% Submission\ 144-147_Canopy_Dets.dwg
PLOT DATE: Sep 06, 2011 - 10:40am

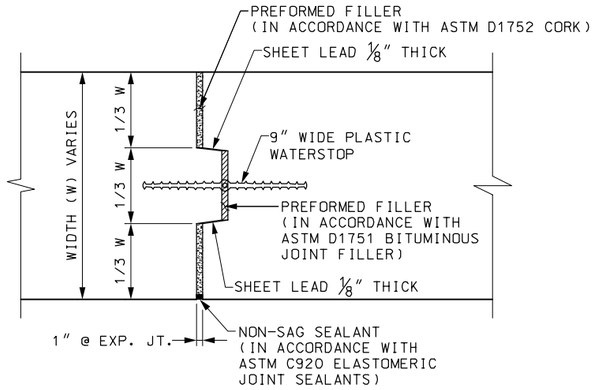

EXPANSION JOINT DETAIL
NOT TO SCALE

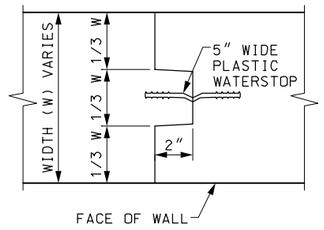

NOTE:
REINFORCEMENT SHALL BE CONTINUOUS THROUGH CONSTRUCTION JOINTS.

CONSTRUCTION JOINT KEY DETAIL
NOT TO SCALE

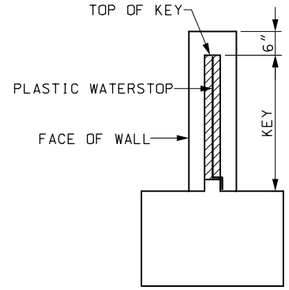

TYPICAL WALL SECTION AT CONSTRUCTION JOINT
NOT TO SCALE

NOTES:

1. FOR GENERAL NOTES, SEE SHEETS S-100 AND S-101.
2. EXPANSION JOINTS IN WALLS SHALL BE SPACED AT 72' MAXIMUM UNLESS OTHERWISE NOTED AND SHALL BE LEVEL AND PLUMB.
3. CONSTRUCTION JOINTS IN WALLS SHALL BE SPACED AT 24' MAXIMUM UNLESS OTHERWISE NOTED AND SHALL BE LEVEL AND PLUMB.
4. REINFORCEMENT SHALL BE CONTINUOUS THROUGH CONSTRUCTION JOINTS AND END 2" CLEAR AT EXPANSION JOINTS.
5. FILLER MATERIAL SHALL BE FASTENED SECURELY TO ONE SIDE OF JOINT.

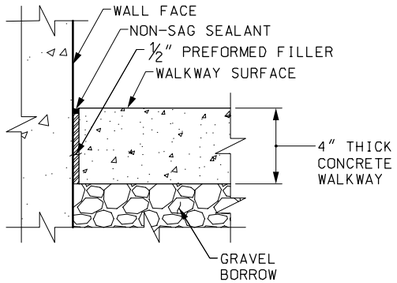

TYPICAL WALKWAY JOINT AT WALL
NOT TO SCALE

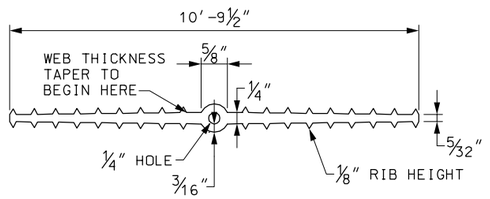

9" PLASTIC WATERSTOP
NOT TO SCALE

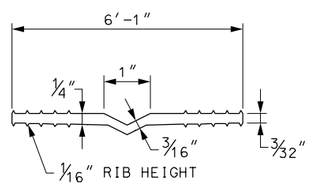

5" PLASTIC WATERSTOP
NOT TO SCALE

90% SUBMITTAL
NOT FOR CONSTRUCTION

ISSUE	DATE	DESCRIPTION	BY	CHKD.	APP.

JACOBS
343 CONGRESS STREET
BOSTON, MA 02110
(617) 242-9222

HNTB
300 APOLLO DRIVE
CHELMSFORD, MA 01824
(978) 905-4000

PROJECT MANAGER Date

MASSACHUSETTS BAY TRANSPORTATION AUTHORITY
APPROVED BY:
PROJECT MANAGER Date

HORIZ: AS NOTED	DES. BY	DR. BY	CHK. BY	PLAN NO.	ISSUE
VERT: AS NOTED	JAG	JAG	MWT		
DATE: 9/8/11				SHEET S-148	

MASSACHUSETTS BAY TRANSPORTATION AUTHORITY
FITCHBURG COMMUTER RAIL LINE
IMPROVEMENT PROJECT
CONTRACT NO. G67CN01

SOUTH ACTON STATION
GENERAL STRUCTURAL DETAILS

FILE NAME: P:\MBTA\2008\E2X37800\CAD\700CADD\702STATIONS\South Acton\Structural\90% Submission\148_Gen_Dets.dwg
PLOT DATE: Sep 06, 2011 - 10:40am

EAST TO BOSTON

WEST TO FITCHBURG

TOWN OF ACTON

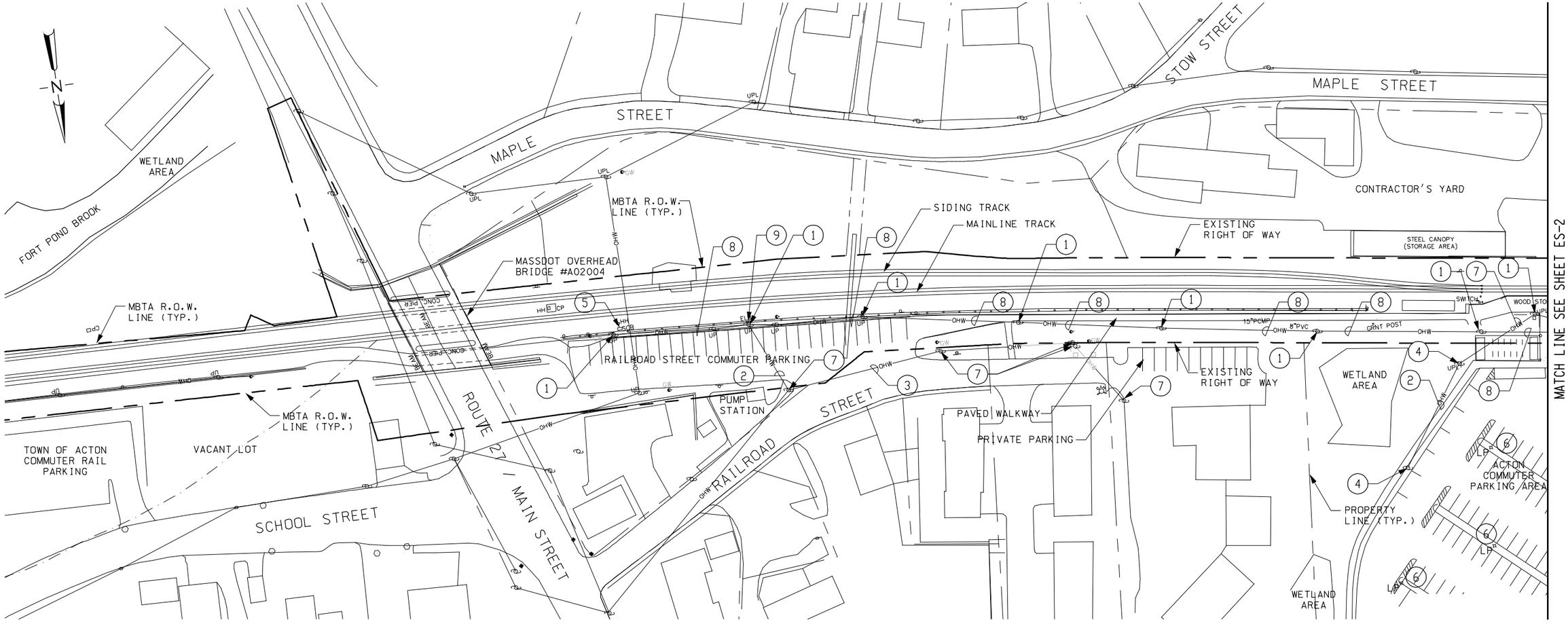

PLAN

ELECTRICAL DEMOLITION NOTES:
(APPLIES TO SHEETS ES-1 AND ES-2 ONLY)

1. SIGNAL POLE (DISCONNECT & REMOVE). COORDINATE TASK WITH MBTA SIGNAL DEPARTMENT.
2. AERIAL POWER FEED (DISCONNECT & REMOVE). COORDINATE WITH NSTAR.
3. AERIAL POWER FEED TO REMAIN.
4. LIGHTING POLE (DISCONNECT & REMOVE). COORDINATE WITH NSTAR.
5. SIGNAL/TELECOMM EQUIPMENT - SHALL BE REMOVED BY MBCR SIGNAL GROUP.
6. LIGHTING POLE TO REMAIN
7. POWER POLE TO REMAIN
8. AERIAL WIRE (DISCONNECT & REMOVE)
9. SIGNAL/POWER ENCLOSURE - SHALL BE REMOVED BY MBCR SIGNAL GROUP.

90% SUBMITTAL
NOT FOR CONSTRUCTION

HORIZ. 40 0 40 80
(SCALE IN FEET)

ISSUE	DATE	DESCRIPTION	BY	CHKD.	APP.

JACOBS
343 CONGRESS STREET
BOSTON, MA 02110
(617) 242-9222

MASSACHUSETTS BAY TRANSPORTATION AUTHORITY

FITCHBURG COMMUTER RAIL LINE
IMPROVEMENT PROJECT
CONTRACT NO. G67CN01

SOUTH ACTON STATION
ELECTRICAL (EXISTING) CONDITIONS PLAN
SHEET 1 OF 2

HNTB
300 APOLLO DRIVE
CHELMSFORD, MA 01824
(978) 905-4000

PROJECT MANAGER Date

MASSACHUSETTS BAY TRANSPORTATION AUTHORITY
APPROVED BY:
PROJECT MANAGER Date

HORIZ: AS SHOWN	DES. BY	DR. BY	CHK. BY	PLAN NO.	ISSUE
VERT: NONE	RW	JPH	WTG		
DATE: 9/8/11				SHEET ES-1	

FILE NAME: P:\MBTA\2008\E2X37800\CAD\700CADD\702STATIONS\South Acton\Electrical\90%\ ES1 & ES2 Existing Conditions Plans.dwg
PLOT DATE: Aug 18, 2011 - 10:21am

EAST TO BOSTON

WEST TO FITCHBURG

TOWN OF ACTON

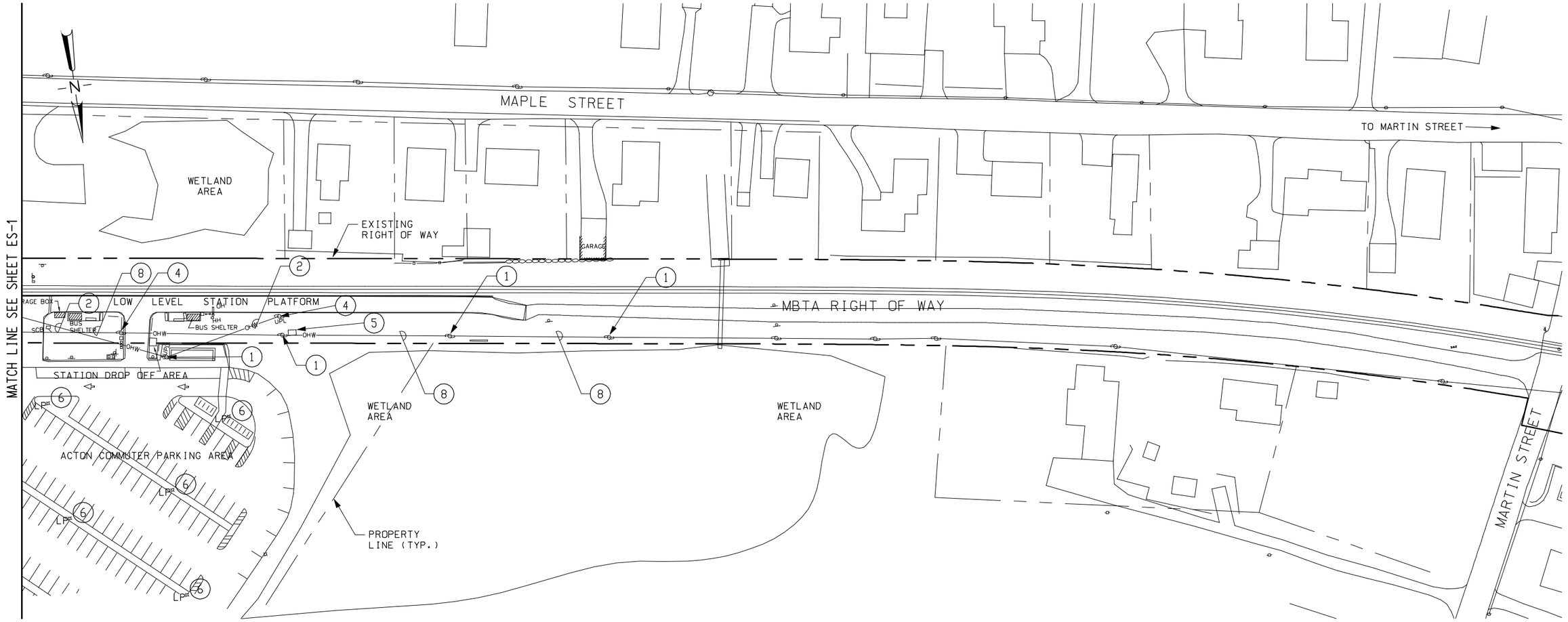

PLAN

NOTE: FOR LEGEND INFO SEE SHEET ES-1.

APPROXIMATE LOCATION OF LIGHTING CONTROL BOX (ADJACENT ENTRANCE DRIVEWAY). CONTROL BOX TO REMAIN.

HORIZ. 40 0 40 80

(SCALE IN FEET)

90% SUBMITTAL

NOT FOR CONSTRUCTION

ISSUE	DATE	DESCRIPTION	BY	CHKD.	APP.

JACOBS 343 CONGRESS STREET BOSTON, MA 02110 (617) 242-9222

MASSACHUSETTS BAY TRANSPORTATION AUTHORITY

FITCHBURG COMMUTER RAIL LINE IMPROVEMENT PROJECT CONTRACT NO. G67CN01

SOUTH ACTON STATION ELECTRICAL (EXISTING) CONDITIONS PLAN SHEET 2 OF 2

HNTB 300 APOLLO DRIVE CHELMSFORD, MA 01824 (978) 905-4000

PROJECT MANAGER Date

MASSACHUSETTS BAY TRANSPORTATION AUTHORITY

APPROVED BY:

PROJECT MANAGER Date

HORIZ: AS SHOWN	DES. BY	DR. BY	CHK. BY	PLAN NO.	ISSUE
VERT: NONE	RW	JPH	WTG		
DATE: 9/8/11				SHEET ES-2	

FILE NAME: P:\MBTA\2008\E2X37800\CAD\700CADD\702STATIONS\South Acton\Electrical\90%\ ES1 & ES2 Existing Conditions Plans.dwg
PLOT DATE: Aug 18, 2011 - 10:22am

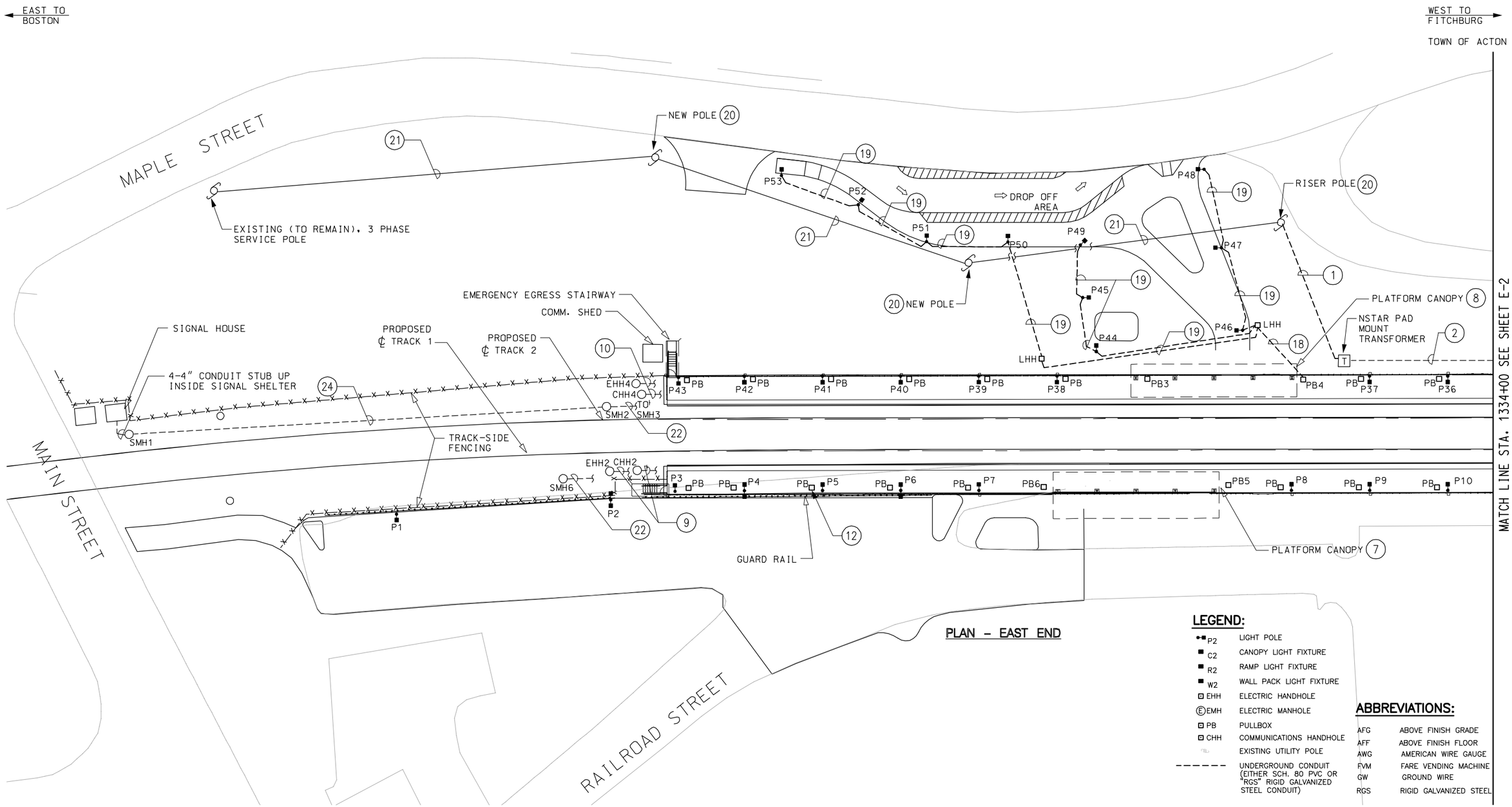

LEGEND:

P2	LIGHT POLE
C2	CANOPY LIGHT FIXTURE
R2	RAMP LIGHT FIXTURE
W2	WALL PACK LIGHT FIXTURE
EHH	ELECTRIC HANDHOLE
EMH	ELECTRIC MANHOLE
PB	PULLBOX
CHH	COMMUNICATIONS HANDHOLE
	EXISTING UTILITY POLE
- - - - - -	UNDERGROUND CONDUIT (EITHER SCH. 80 PVC OR "RGS" RIGID GALVANIZED STEEL CONDUIT)

ABBREVIATIONS:

AFG	ABOVE FINISH GRADE
AFF	ABOVE FINISH FLOOR
AWG	AMERICAN WIRE GAUGE
FVM	FARE VENDING MACHINE
GW	GROUND WIRE
RGS	RIGID GALVANIZED STEEL

NOTES (CONTINUED ON SHEET E2):

1. 2W-4" CONCRETE ENCASED PRIMARY POWER DUCTBANK, DISTRIBUTION AS FOLLOWS:
   CONDUIT 1: THREE PHASE NSTAR PRIMARY FEEDER
   CONDUIT 2: SPARE
2. 2W-4" CONCRETE ENCASED SECONDARY POWER DUCTBANK, DISTRIBUTION AS FOLLOWS:
   CONDUIT 1: 4#600KCMIL (600V INSL) & 1#3AWG GW
   CONDUIT 2: SPARE
3. FOR ELECTRICAL WORK IN 1ST FLOOR (OUTBOUND) AREA SEE SHEETS E-3, E-7.
4. FOR ELECTRICAL WORK IN 2ND FLOOR (OUTBOUND) AREA SEE SHEETS E-5, E-9.
5. FOR ELECTRICAL WORK IN 1ST FLOOR (INBOUND) AREA SEE SHEETS E-4, E-8.
6. FOR ELECTRICAL WORK IN 2ND FLOOR (INBOUND) AREA SEE SHEETS E-6, E-10.
7. SEE SHEET E-11 FOR OUTBOUND (EAST) CANOPY LIGHTING INFO
8. SEE SHEET E-12 FOR INBOUND (EAST) CANOPY LIGHTING INFO
9. SEE SHEET E-3 FOR LARGE CANOPY (OUTBOUND PLATFORM) LIGHTING
10. SEE SHEET E-4 FOR LARGE CANOPY (INBOUND PLATFORM) LIGHTING
11. UNDER PLATFORM PULLBOX (TYP) SEE SHEET E-14 FOR WIRING INFO
12. UNDER PLATFORM PULLBOX (TYP) SEE SHEET E-13 FOR WIRING INFO
13. LV COMM 6W-3" CONCRETE ENCASED PVC DUCTBANK

90% SUBMITTAL
NOT FOR CONSTRUCTION

20 0 20 40
SCALE IN FEET

MASSACHUSETTS BAY TRANSPORTATION AUTHORITY
FITCHBURG COMMUTER RAIL LINE IMPROVEMENT PROJECT
CONTRACT NO. G67CN01

SOUTH ACTON STATION
ELECTRICAL SITE PLAN – EAST END
SHEET 1 OF 2

HNTB 300 APOLLO DRIVE CHELMSFORD, MA 01824 (978) 905-4000

MASSACHUSETTS BAY TRANSPORTATION AUTHORITY
APPROVED BY:
PROJECT MANAGER Date

ISSUE	DATE	DESCRIPTION	BY	CHKD.	APP.

JACOBS 343 CONGRESS STREET BOSTON, MA 02110 (617) 242-9222

HORIZ: AS SHOWN	DES. BY	DR. BY	CHK. BY	PLAN NO.
VERT: NONE	RJW	JPH	WTG	
DATE: 9/8/11				SHEET E-1

ISSUE

FILE NAME: P:\MBTA\2008\E2X37800\CAD\700CADD\702STATIONS\South Acton\Electrical\90%\ E1 & E2 Electrical Site Plans.dwg
PLOT DATE: Sep 06, 2011 – 2:19pm

EAST TO BOSTON

WEST TO FITCHBURG

TOWN OF ACTON

MATCH LINE STA. 1334+00 SEE SHEET E1

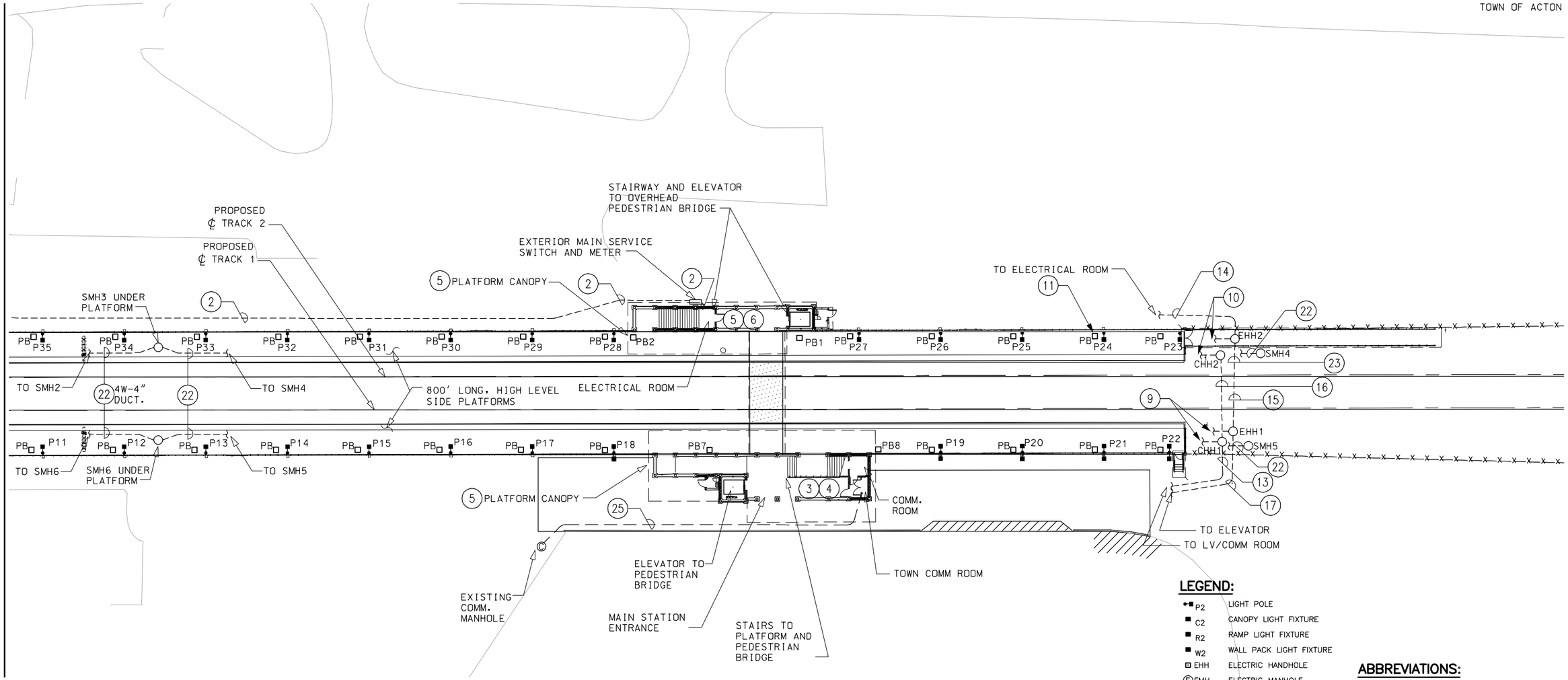

PLAN – WEST END

NOTES (CONTINUED FROM SHEET E1):

(14) 10W-2" CONCRETE ENCASED PVC DUCTBANK, DISTRIBUTION AS FOLLOWS:
CONDUIT #1: 5X(2#8AWG XHHW & 1#12G) OUTBOUND LIGHTING – WEST
CONDUIT #2: 5X(2#8AWG XHHW $ 1#12G) OUTBOUND LIGHTING – EAST
CONDUITS #3,4: SPARE – OUTBOUND PLATFORM
CONDUIT #5: 3#4AWG XHHW & 1#8G) OUTBOUND ELEVATOR
CONDUIT #6: 4#1 AWG XHHW & 1#6G) OUTBOUND MBTA COMM CLOSET POWER SERVICE
CONDUIT #7: 5X(2#8AWG XHHW & 1#12G) INBOUND LIGHTING – WEST
CONDUIT #8: 7X(2#8AWG XHHW & 1#12G) INBOUND LIGHTING – EAST
CONDUIT #9,10: SPARE – INBOUND PLATFORM

(15) 6W-2" CONCRETE ENCASED RGS DUCTBANK, DISTRIBUTION AS FOLLOWS:
CONDUIT #1: 5X(2#8AWG XHHW & 1#12G) OUTBOUND LIGHTING – WEST
CONDUIT #2: 6X(2#8AWG XHHW & 1#12G) OUTBOUND LIGHTING – EAST
CONDUIT #3,4: SPARE – OUTBOUND PLATFORM
CONDUIT #5: (3#4AWG XHHW & 1#8G) OUTBOUND ELEVATOR
CONDUIT #6: (4#1AWG XHHW & 1#6G) OUTBOUND MBTA COMM CLOSET POWER SERVICE

(16) 3W-3" CONCRETE ENCASED RGS DUCTBANK, DISTRIBUTION AS FOLLOWS:
CONDUIT #1: MBTA/TOWN OF ACTON COMM USE
CONDUIT #2: MBTA/TOWN OF ACTON COMM USE
CONDUIT #3: MBTA/TOWN OF ACTON COMM USE

(17) 2-2" CONCRETE ENCASED PVC CONDUITS, DISTRIBUTION AS FOLLOWS:
CONDUIT 1: 3#4 & 1#8G OUTBOUND ELEVATOR SERVICE
CONDUIT 2: 4#1 & 1#6G MBTA COMM. CLOSET LOAD CENTER

(18) 2" RGS CONDUIT WITH 3X(2#8 XHHW & 1#12G)

(19) 3/4" RGS CONDUIT WITH 2#8 XHHW & 1#12G

(20) NEW SERVICE POLE PROVIDED BY NSTAR

(21) THREE PHASE PRIMARY AERIAL LINE PROVIDED BY NSTAR

(22) 4W-4" PVC SIGNAL DUCTBANK (ROUTED UNDER PLATFORM) MIN 30" BFG

(23) 4W-4" RGS CONCRETE ENCASED DUCTBANK (SIGNAL TYPE) ROUTED UNDER TRACKS

(24) 4W-4" PVC DUCTBANK WITH CONCRETE ENCASEMENT

(25) 2W-4" PVC DUCTBANK CONCRETE ENCASED (CITY OF SOUTH ACTON TELECOMM DEPARTMENT)

20 0 20 40
SCALE IN FEET

LEGEND:

P2	LIGHT POLE
C2	CANOPY LIGHT FIXTURE
R2	RAMP LIGHT FIXTURE
W2	WALL PACK LIGHT FIXTURE
EHH	ELECTRIC HANDHOLE
EMH	ELECTRIC MANHOLE
PB	PULLBOX
CHH	COMMUNICATIONS HANDHOLE
	EXISTING UTILITY POLE
------	UNDERGROUND CONDUIT (EITHER SCH. 80 PVC OR "RGS" RIGID GALVANIZED STEEL CONDUIT)

ABBREVIATIONS:

AFG	ABOVE FINISH GRADE
AFF	ABOVE FINISH FLOOR
AWG	AMERICAN WIRE GAUGE
FVM	FARE VENDING MACHINE
GW	GROUND WIRE
RGS	RIGID GALVANIZED STEEL

90% SUBMITTAL
NOT FOR CONSTRUCTION

ISSUE	DATE	DESCRIPTION	BY	CHKD.	APP.

JACOBS 343 CONGRESS STREET BOSTON, MA 02110 (617) 242-9222

MASSACHUSETTS BAY TRANSPORTATION AUTHORITY

FITCHBURG COMMUTER RAIL LINE IMPROVEMENT PROJECT CONTRACT NO. G67CN01

SOUTH ACTON STATION ELECTRICAL SITE PLAN – WEST END SHEET 2 OF 2

HNTB 300 APOLLO DRIVE CHELMSFORD, MA 01824 (978) 905-4000

PROJECT MANAGER Date

MASSACHUSETTS BAY TRANSPORTATION AUTHORITY

APPROVED BY:

PROJECT MANAGER Date

HORIZ: AS SHOWN	DES. BY	DR. BY	CHK. BY	PLAN NO.	ISSUE
VERT: NONE	RJW	JPH	WTG		
DATE: 9/8/11				SHEET E-2	

FILE NAME: P:\MBTA\2008\E2X37800\CAD\700CADD\702STATIONS\South Acton\Electrical\90%\ E1 & E2 Electrical Site Plans.dwg
PLOT DATE: Sep 06, 2011 – 2:22pm

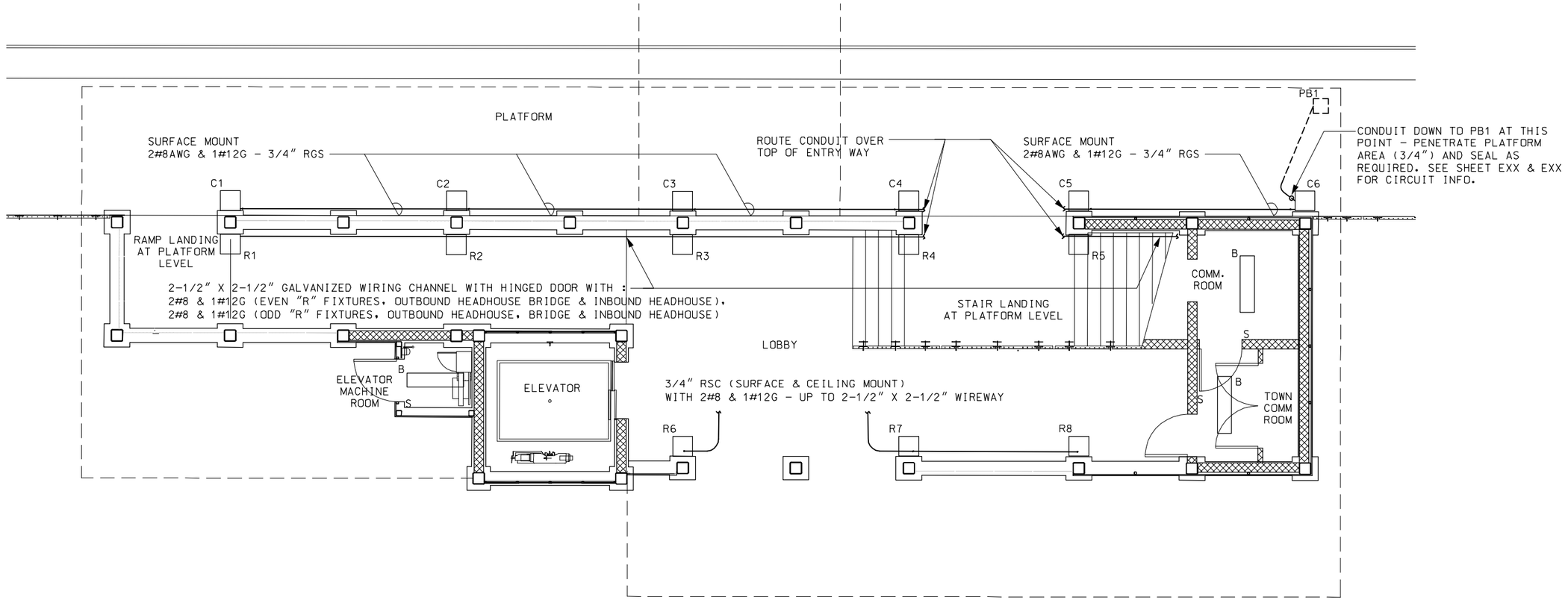

PLAN

0 2 4 8

SCALE: 1/4" = 1'-0"

90% SUBMITTAL
NOT FOR CONSTRUCTION

FILE NAME: P:\MBTA 2008\E2X37800\CAD\700CADD\702STATIONS\South Acton\Electrical\90%\ E3-E6 Head House Lighting Plans.dwg
PLOT DATE: Sep 06, 2011 - 2:24pm

ISSUE	DATE	DESCRIPTION	BY	CHKD.	APP.

JACOBS
343 CONGRESS STREET
BOSTON, MA 02110
(617) 242-9222

MASSACHUSETTS BAY TRANSPORTATION AUTHORITY

FITCHBURG COMMUTER RAIL LINE
IMPROVEMENT PROJECT
CONTRACT NO. G67CN01

SOUTH ACTON STATION
FIRST FLOOR – OUTBOUND HEAD HOUSE LIGHTING PLAN

HNTB
300 APOLLO DRIVE
CHELMSFORD, MA 01824
(978) 905-4000

PROJECT MANAGER Date

MASSACHUSETTS BAY TRANSPORTATION AUTHORITY
APPROVED BY:
PROJECT MANAGER Date

HORIZ: AS SHOWN	DES. BY	DR. BY	CHK. BY	PLAN NO.	ISSUE
VERT: NONE	RJW	JPH	WTG		
DATE: 9/8/11				SHEET E-3	

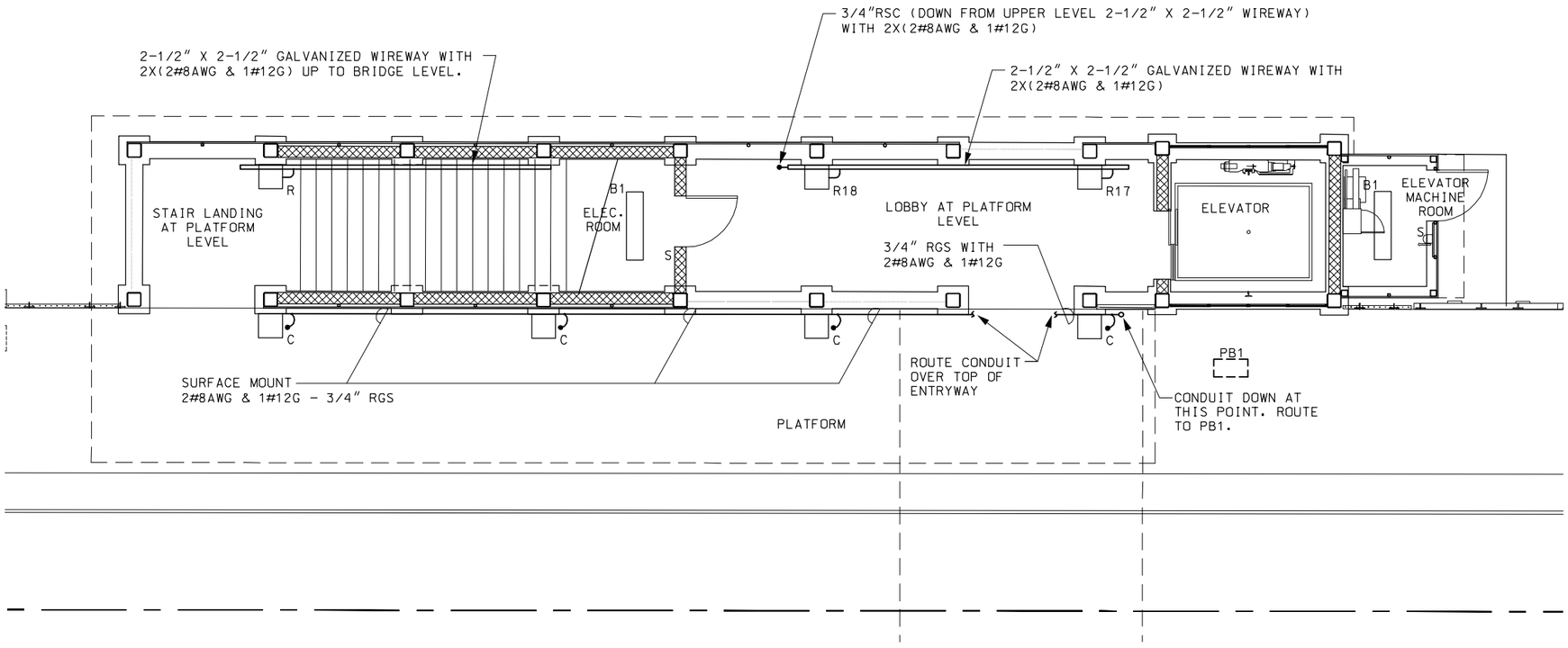

PLAN

0 2 4 8

SCALE: 1/4" = 1'-0"

90% SUBMITTAL
NOT FOR CONSTRUCTION

ISSUE	DATE	DESCRIPTION	BY	CHKD.	APP.

JACOBS
343 CONGRESS STREET
BOSTON, MA 02110
(617) 242-9222

MASSACHUSETTS BAY TRANSPORTATION AUTHORITY

FITCHBURG COMMUTER RAIL LINE
IMPROVEMENT PROJECT
CONTRACT NO. G67CN01

SOUTH ACTON STATION
FIRST FLOOR – INBOUND HEAD HOUSE LIGHTING PLAN

HNTB
300 APOLLO DRIVE
CHELMSFORD, MA 01824
(978) 905-4000

PROJECT MANAGER Date

MASSACHUSETTS BAY TRANSPORTATION AUTHORITY
APPROVED BY:
PROJECT MANAGER Date

HORIZ: AS SHOWN	DES. BY	DR. BY	CHK. BY	PLAN NO.	ISSUE
VERT: NONE	RJW	JPH	WTG		
DATE: 9/8/11				SHEET E-4	

FILE NAME: P:\MBTA\2008\E22X37800\CAD\700CADD\702STATIONS\South Acton\Electrical\90%\ E3-E6 Head House Lighting Plans.dwg
PLOT DATE: Aug 18, 2011 - 10:27am

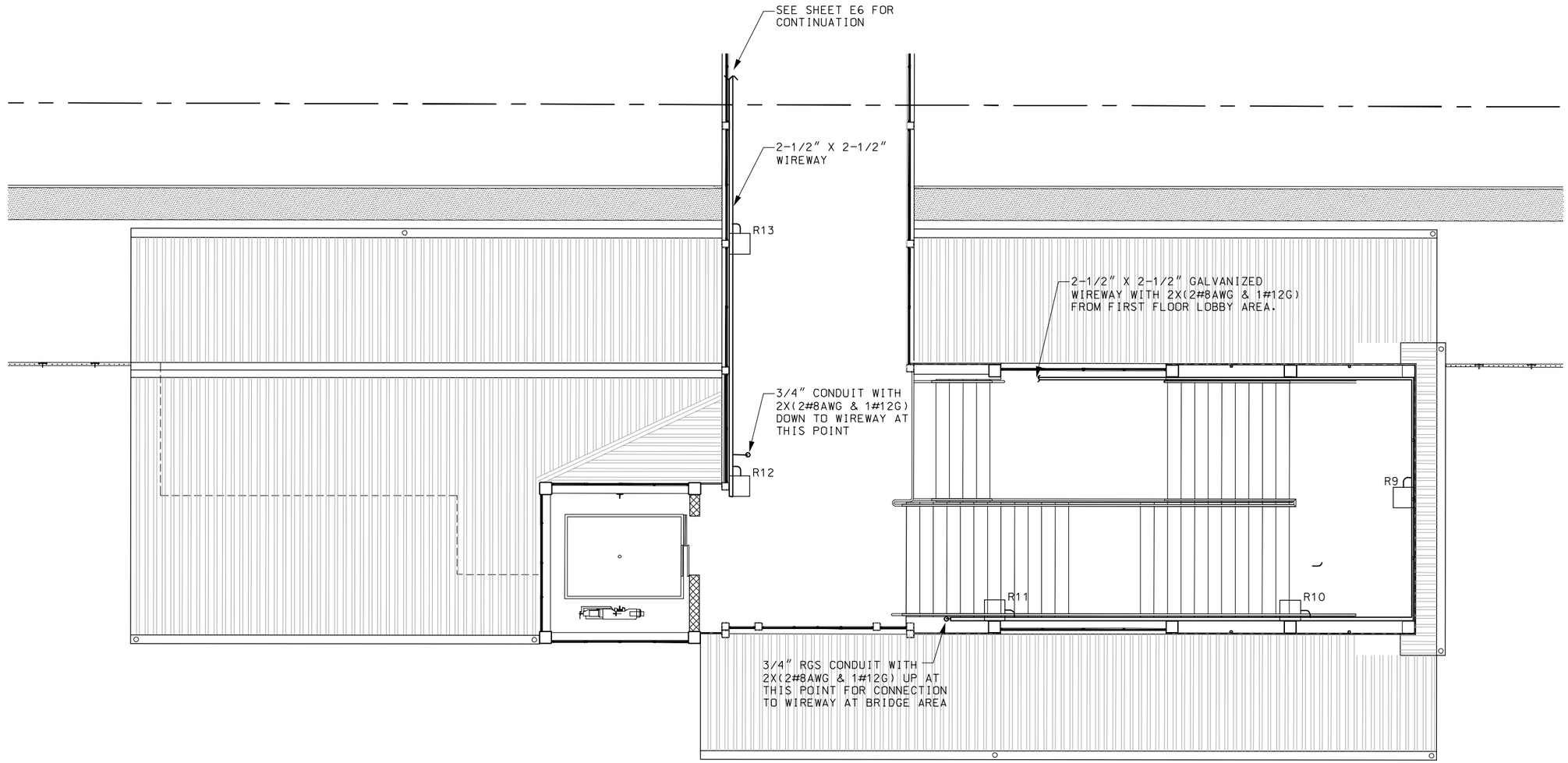

PLAN

0 2 4 8

SCALE: 1/4" = 1'-0"

90% SUBMITTAL
NOT FOR CONSTRUCTION

ISSUE	DATE	DESCRIPTION	BY	CHKD.	APP.

JACOBS
343 CONGRESS STREET
BOSTON, MA 02110
(617) 242-9222

MASSACHUSETTS BAY TRANSPORTATION AUTHORITY

FITCHBURG COMMUTER RAIL LINE
IMPROVEMENT PROJECT
CONTRACT NO. G67CN01

SOUTH ACTON STATION
SECOND FLOOR–OUTBOUND HEAD HOUSE LIGHTING PLAN

HNTB
300 APOLLO DRIVE
CHELMSFORD, MA 01824
(978) 905-4000

PROJECT MANAGER Date

MASSACHUSETTS BAY TRANSPORTATION AUTHORITY
APPROVED BY:
PROJECT MANAGER Date

HORIZ: AS SHOWN	DES. BY	DR. BY	CHK. BY	PLAN NO.	ISSUE
VERT: NONE	RJW	JPH	WTG		
DATE: 9/8/11				SHEET E-5	

FILE NAME: P:\MBTA\2008\E2X37800\CAD\700CADD\702STATIONS\South Acton\Electrical\90%\ E3-E6 Head House Lighting Plans.dwg
PLOT DATE: Aug 18, 2011 - 10:27am

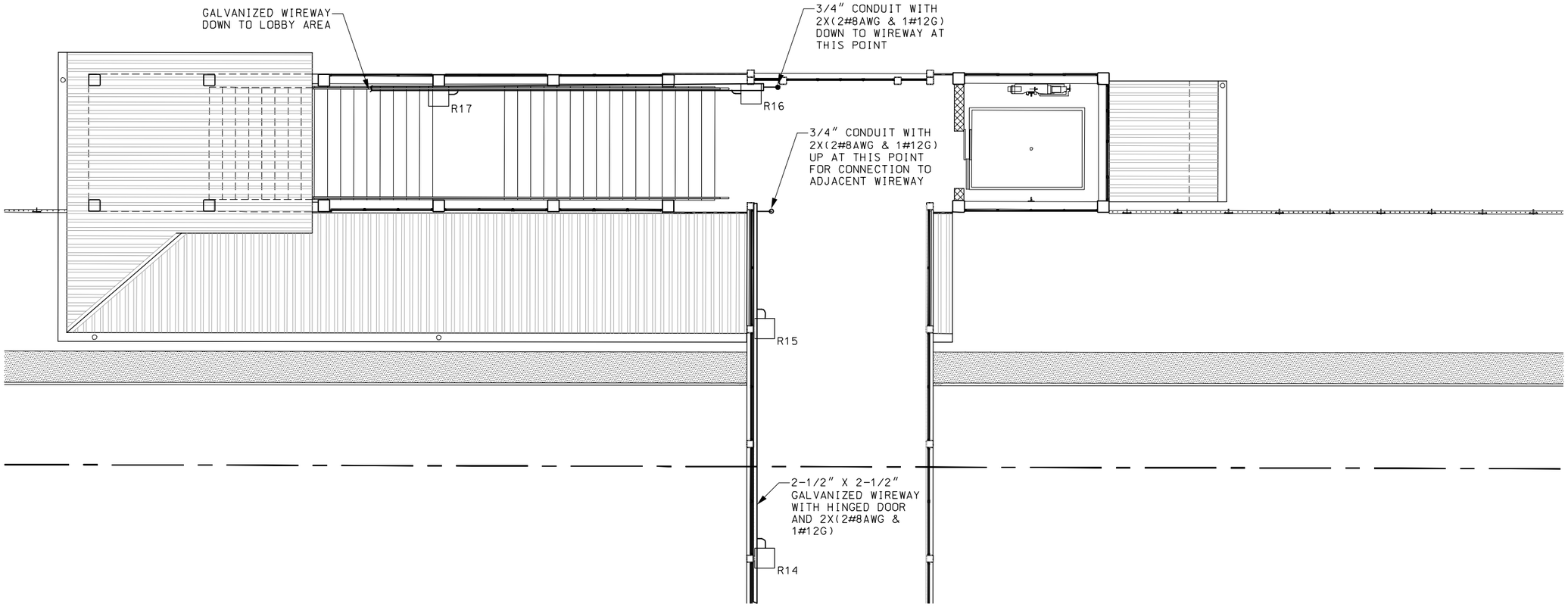

PLAN

0 2 4 8

SCALE: 1/4" = 1'-0"

90% SUBMITTAL
NOT FOR CONSTRUCTION

FILE NAME: P:\WBTA\2008\E2X37800\CAD\700CADD\702STATIONS\South Acton\Electrical\90%\ E3-E6 Head House Lighting Plans.dwg
PLOT DATE: Aug 18, 2011 - 10:27am

ISSUE	DATE	DESCRIPTION	BY	CHKD.	APP.

JACOBS
343 CONGRESS STREET
BOSTON, MA 02110
(617) 242-9222

MASSACHUSETTS BAY TRANSPORTATION AUTHORITY

FITCHBURG COMMUTER RAIL LINE
IMPROVEMENT PROJECT
CONTRACT NO. G67CN01

SOUTH ACTON STATION
SECOND FLOOR – INBOUND HEAD HOUSE LIGHTING PLAN

HNTB
300 APOLLO DRIVE
CHELMSFORD, MA 01824
(978) 905-4000

PROJECT MANAGER Date

MASSACHUSETTS BAY TRANSPORTATION AUTHORITY

APPROVED BY:

PROJECT MANAGER Date

HORIZ: AS SHOWN	DES. BY	DR. BY	CHK. BY	PLAN NO.	ISSUE
VERT: NONE	RJW	JPH	WTG		
DATE: 9/8/11				SHEET E-6	

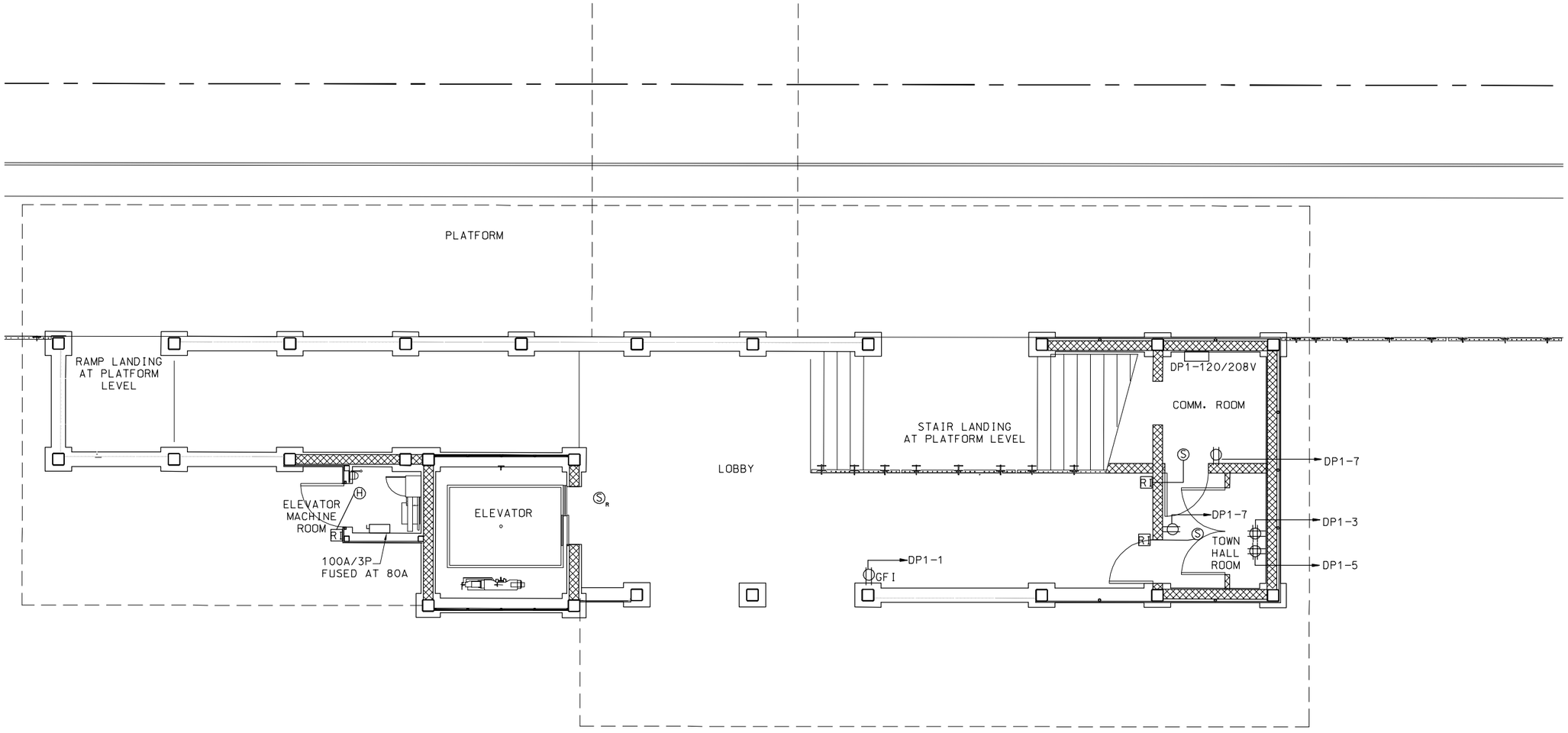

PLAN

0 2 4 8

SCALE: 1/4" = 1'-0"

NOTES:

1. ALL RECEPTACLES IN LOBBY AND BUILDING AREAS SHALL UTILIZE 2-1/2" X 2-1/2" WIREWAY AS MAIN RACEWAY PATH BACK TO ELECTRIC ROOM.
2. FOR INFO ON ELEVATOR WIRING SEE ONE LINE DIAGRAM.

90% SUBMITTAL
NOT FOR CONSTRUCTION

FILE NAME: P:\MBTA\2008\E2X37800\CAD\700CADD\702STATIONS\South Acton\Electrical\90%\ E7-E10 Head House Power Plans.dwg
PLOT DATE: Aug 18, 2011 - 10:29am

MASSACHUSETTS BAY TRANSPORTATION AUTHORITY

FITCHBURG COMMUTER RAIL LINE
IMPROVEMENT PROJECT
CONTRACT NO. G67CN01

SOUTH ACTON STATION
FIRST FLOOR – OUTBOUND HEAD HOUSE POWER PLAN

ISSUE	DATE	DESCRIPTION	BY	CHKD.	APP.

HNTB
300 APOLLO DRIVE
CHELMSFORD, MA 01824
(978) 905-4000

PROJECT MANAGER Date

MASSACHUSETTS BAY TRANSPORTATION AUTHORITY
APPROVED BY:
PROJECT MANAGER Date

JACOBS
343 CONGRESS STREET
BOSTON, MA 02110
(617) 242-9222

HORIZ: AS SHOWN	DES. BY	DR. BY	CHK. BY	PLAN NO.	ISSUE
VERT: NONE	RJW	JPH	WTG		
DATE: 9/8/11				SHEET E-7	

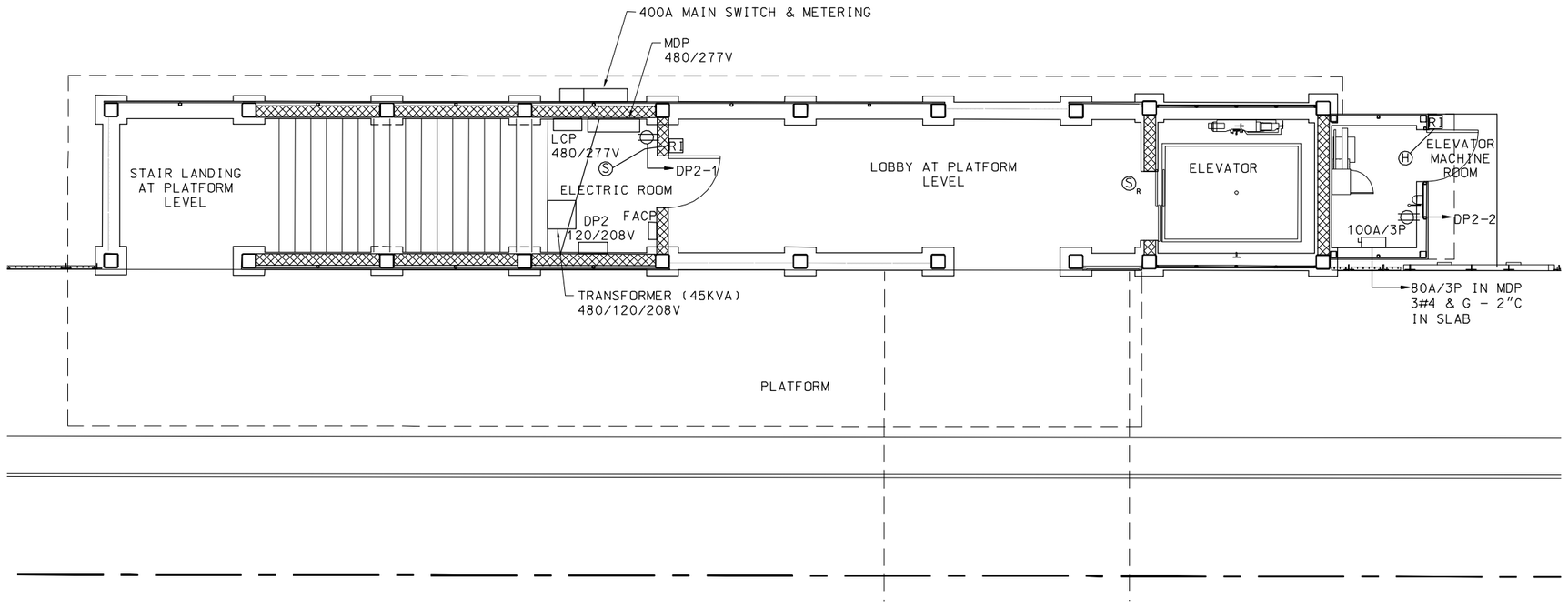

PLAN

0 2 4 8

SCALE: 1/4" = 1'-0"

NOTE:

1. FOR INFO ON ELEVATOR WIRING SEE ONE LINE DIAGRAM.

90% SUBMITTAL
NOT FOR CONSTRUCTION

FILE NAME: P:\MBTA\2008\E2X37800\CAD\700CADD\702STATIONS\South Acton\Electrical\90%\ E7-E10 Head House Power Plans.dwg
PLOT DATE: Aug 18, 2011 - 10:30am

MASSACHUSETTS BAY TRANSPORTATION AUTHORITY

FITCHBURG COMMUTER RAIL LINE
IMPROVEMENT PROJECT
CONTRACT NO. G67CN01

SOUTH ACTON STATION
FIRST FLOOR – INBOUND HEAD HOUSE POWER PLAN

ISSUE	DATE	DESCRIPTION	BY	CHKD.	APP.

HNTB
300 APOLLO DRIVE
CHELMSFORD, MA 01824
(978) 905-4000

PROJECT MANAGER Date

MASSACHUSETTS BAY TRANSPORTATION AUTHORITY
APPROVED BY:
PROJECT MANAGER Date

JACOBS
343 CONGRESS STREET
BOSTON, MA 02110
(617) 242-9222

HORIZ: AS SHOWN	DES. BY	DR. BY	CHK. BY
VERT: NONE	RJW	JPH	WTG
DATE: 9/8/11			

PLAN NO.
SHEET E-8

ISSUE

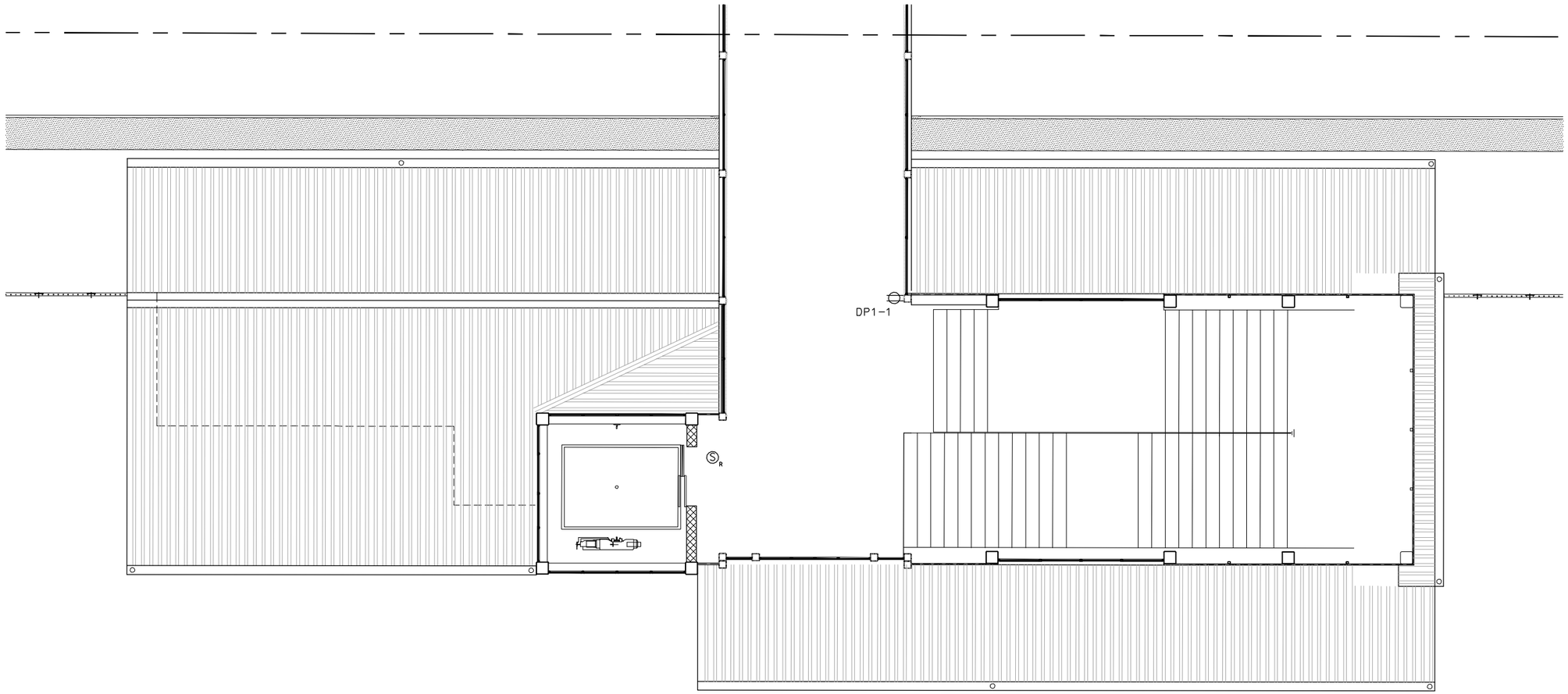

PLAN

0 2 4 8

SCALE: 1/4" = 1'-0"

NOTE:

1. ALL RECEPTACLE CIRCUITS SHALL UTILIZE 2-1/2" X 2-1/2" GALVANIZED WIREWAY AS RACEWAY PATH BACK TO ELECTRICAL ROOM.

90% SUBMITTAL
NOT FOR CONSTRUCTION

MASSACHUSETTS BAY TRANSPORTATION AUTHORITY

FITCHBURG COMMUTER RAIL LINE
IMPROVEMENT PROJECT
CONTRACT NO. G67CN01

SOUTH ACTON STATION
SECOND FLOOR-OUTBOUND HEAD HOUSE POWER PLAN

ISSUE	DATE	DESCRIPTION	BY	CHKD.	APP.

HNTB
300 APOLLO DRIVE
CHELMSFORD, MA 01824
(978) 905-4000

PROJECT MANAGER Date

MASSACHUSETTS BAY TRANSPORTATION AUTHORITY

APPROVED BY:

PROJECT MANAGER Date

JACOBS
343 CONGRESS STREET
BOSTON, MA 02110
(617) 242-9222

HORIZ: AS SHOWN	DES. BY	DR. BY	CHK. BY
VERT: NONE	RJW	JPH	WTG
DATE: 9/8/11			

PLAN NO.

SHEET E-9

ISSUE

FILE NAME: P:\MBTA\2008\E2X37800\CAD\700CADD\702STATIONS\South Acton\Electrical\90% E7-E10 Head House Power Plans.dwg
PLOT DATE: Aug 18, 2011 - 10:30am

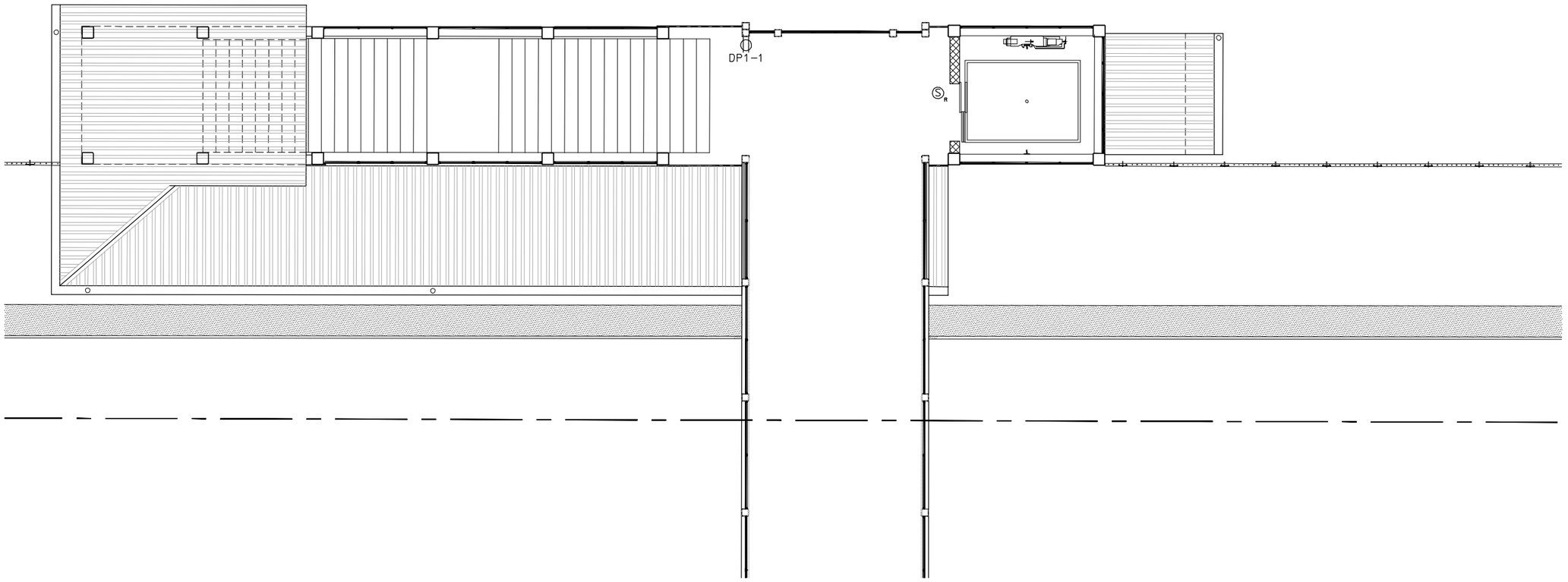

PLAN

0 2 4 8

SCALE: 1/4" = 1'-0"

NOTE:

1. ALL RECEPTACLE CIRCUITS SHALL UTILIZE 2-1/2" X 2-1/2" GALVANIZED WIREWAY AS RACEWAY PATH BACK TO ELECTRICAL ROOM.

90% SUBMITTAL
NOT FOR CONSTRUCTION

MASSACHUSETTS BAY TRANSPORTATION AUTHORITY

FITCHBURG COMMUTER RAIL LINE
IMPROVEMENT PROJECT
CONTRACT NO. G67CN01

SOUTH ACTON STATION
SECOND FLOOR – INBOUND HEAD HOUSE POWER PLAN

ISSUE	DATE	DESCRIPTION	BY	CHKD.	APP.

HNTB
300 APOLLO DRIVE
CHELMSFORD, MA 01824
(978) 905-4000

PROJECT MANAGER Date

MASSACHUSETTS BAY TRANSPORTATION AUTHORITY

APPROVED BY:

PROJECT MANAGER Date

JACOBS
343 CONGRESS STREET
BOSTON, MA 02110
(617) 242-9222

HORIZ: AS SHOWN	DES. BY	DR. BY	CHK. BY	PLAN NO.	ISSUE
VERT: NONE	RJW	JPH	WTG		
DATE: 9/8/11				SHEET E-10	

FILE NAME: P:\MBTA\2008\E2X37800\CAD\700CADD\702STATIONS\South Acton\Electrical\90%\ E7-E10 Head House Power Plans.dwg
PLOT DATE: Aug 18, 2011 - 10:30am

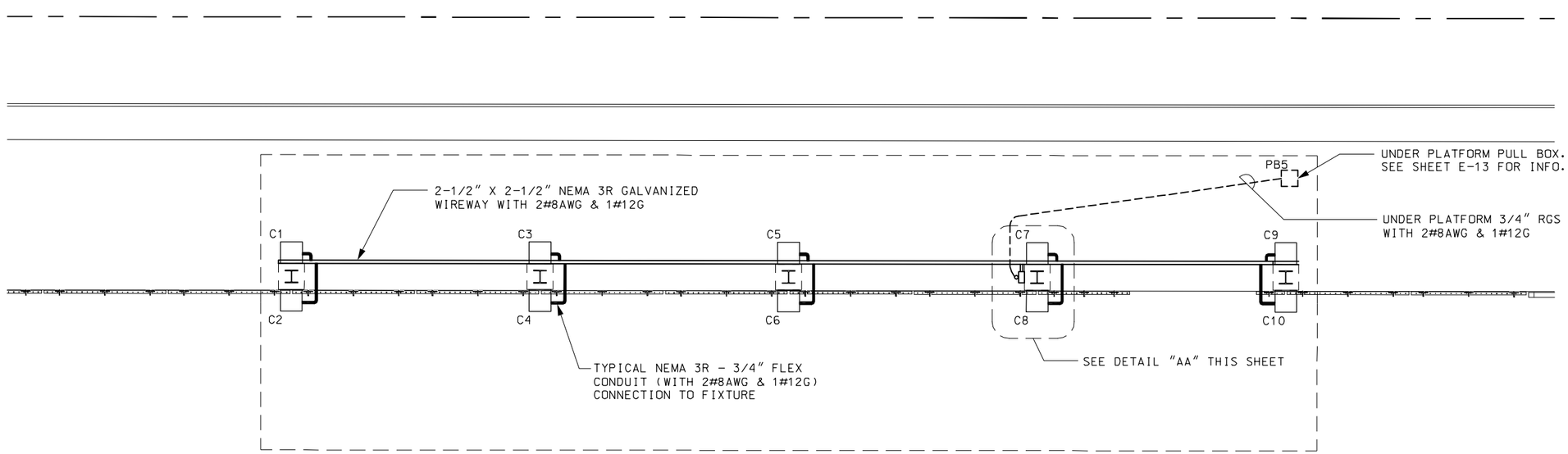

PLAN

0 2 4 8

SCALE: 1/4" = 1'-0"

DETAIL "AA"

N.T.S.

90% SUBMITTAL
NOT FOR CONSTRUCTION

ISSUE	DATE	DESCRIPTION	BY	CHKD.	APP.

JACOBS
343 CONGRESS STREET
BOSTON, MA 02110
(617) 242-9222

MASSACHUSETTS BAY TRANSPORTATION AUTHORITY

FITCHBURG COMMUTER RAIL LINE
IMPROVEMENT PROJECT
CONTRACT NO. G67CN01

SOUTH ACTON STATION
OUTBOUND CANOPY
LIGHTING PLAN

HNTB
300 APOLLO DRIVE
CHELMSFORD, MA 01824
(978) 905-4000

PROJECT MANAGER Date

MASSACHUSETTS BAY TRANSPORTATION AUTHORITY

APPROVED BY:

PROJECT MANAGER Date

HORIZ: AS SHOWN	DES. BY	DR. BY	CHK. BY	PLAN NO.	ISSUE
VERT: NONE	RJW	JPH	WTG		
DATE: 9/8/11				SHEET E-11	

FILE NAME: P:\MBTA\2008\E22X37800\CAD\700CADD\702STATIONS\South Acton\Electrical\90%\ E11 & E12 Canopy Lighting Plans.dwg
PLOT DATE: Aug 18, 2011 - 10:32am

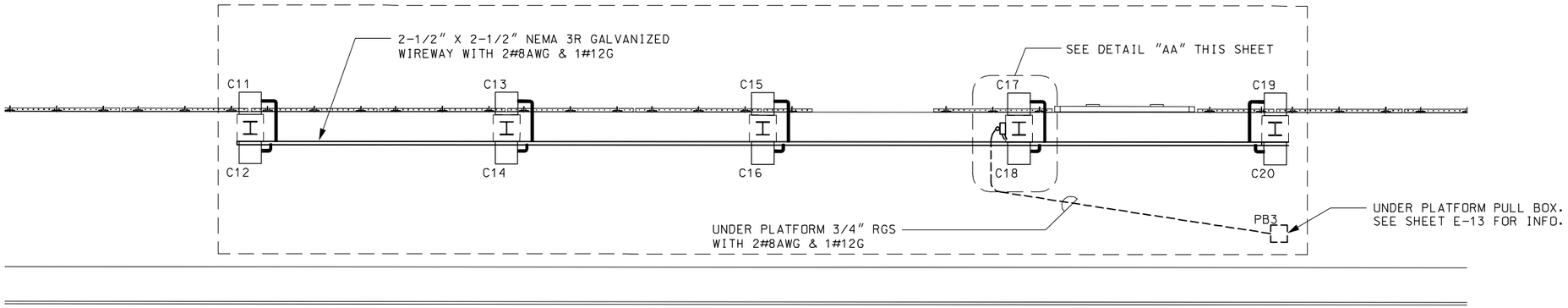

PLAN

0 2 4 8

SCALE: 1/4" = 1'-0"

DETAIL "AA"

N.T.S.

90% SUBMITTAL
NOT FOR CONSTRUCTION

FILE NAME: P:\MBTA\2008\E22X37800\CAD\700CADD\702STATIONS\South Acton\Electrical\90%\ E11 & E12 Canopy Lighting Plans.dwg
PLOT DATE: Aug 18, 2011 - 10:32am

ISSUE	DATE	DESCRIPTION	BY	CHKD.	APP.

JACOBS
343 CONGRESS STREET
BOSTON, MA 02110
(617) 242-9222

MASSACHUSETTS BAY TRANSPORTATION AUTHORITY

FITCHBURG COMMUTER RAIL LINE
IMPROVEMENT PROJECT
CONTRACT NO. G67CN01

SOUTH ACTON STATION
INBOUND CANOPY
LIGHTING PLAN

HNTB
300 APOLLO DRIVE
CHELMSFORD, MA 01824
(978) 905-4000

PROJECT MANAGER Date

MASSACHUSETTS BAY TRANSPORTATION AUTHORITY

APPROVED BY:

PROJECT MANAGER Date

HORIZ: AS SHOWN	DES. BY	DR. BY	CHK. BY	PLAN NO.	ISSUE
VERT: NONE	RJW	JPH	WTG		
DATE: 9/8/11				SHEET E-12	

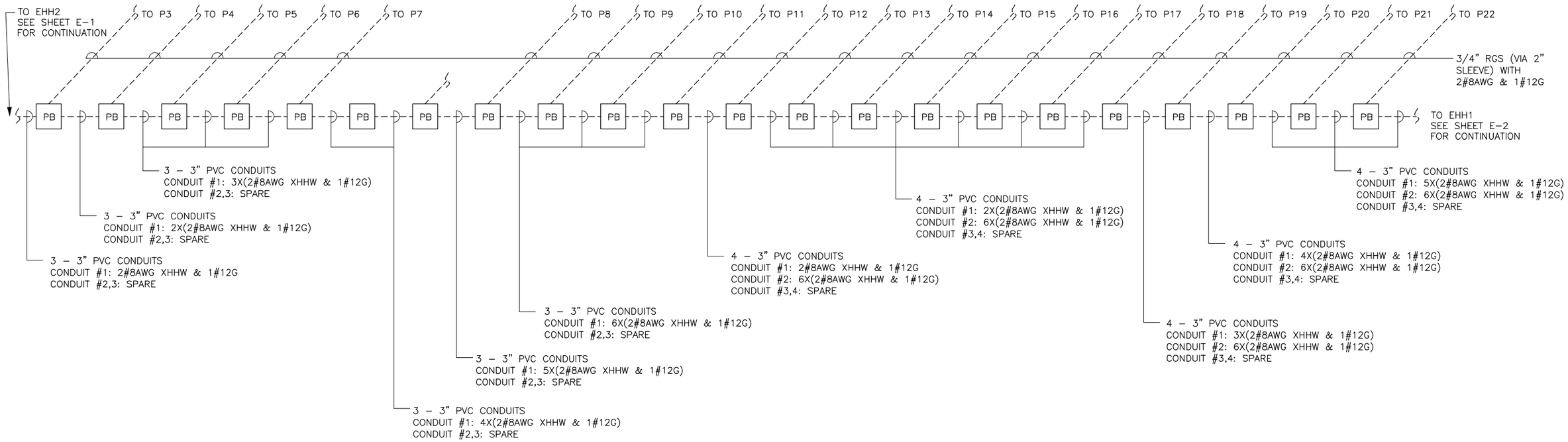

90% SUBMITTAL
NOT FOR CONSTRUCTION

FILE NAME: P:\MBTA\2008\E2X37800\CAD\700CADD\702STATIONS\South Acton\Electrical\90%\ E13.dwg
PLOT DATE: Aug 18, 2011 - 10:34am

MASSACHUSETTS BAY TRANSPORTATION AUTHORITY

FITCHBURG COMMUTER RAIL LINE
IMPROVEMENT PROJECT
CONTRACT NO. G67CN01

SOUTH ACTON STATION
OUTBOUND PLATFORM WIRING

ISSUE	DATE	DESCRIPTION	BY	CHKD.	APP.

HNTB
300 APOLLO DRIVE
CHELMSFORD, MA 01824
(978) 905-4000

JACOBS
343 CONGRESS STREET
BOSTON, MA 02110
(617) 242-9222

PROJECT MANAGER Date

MASSACHUSETTS BAY TRANSPORTATION AUTHORITY
APPROVED BY:
PROJECT MANAGER Date

HORIZ:	DES. BY	DR. BY	CHK. BY	PLAN NO.	ISSUE
VERT:	RJW	JPH	WTG		
DATE: 9/8/11				SHEET E-13	

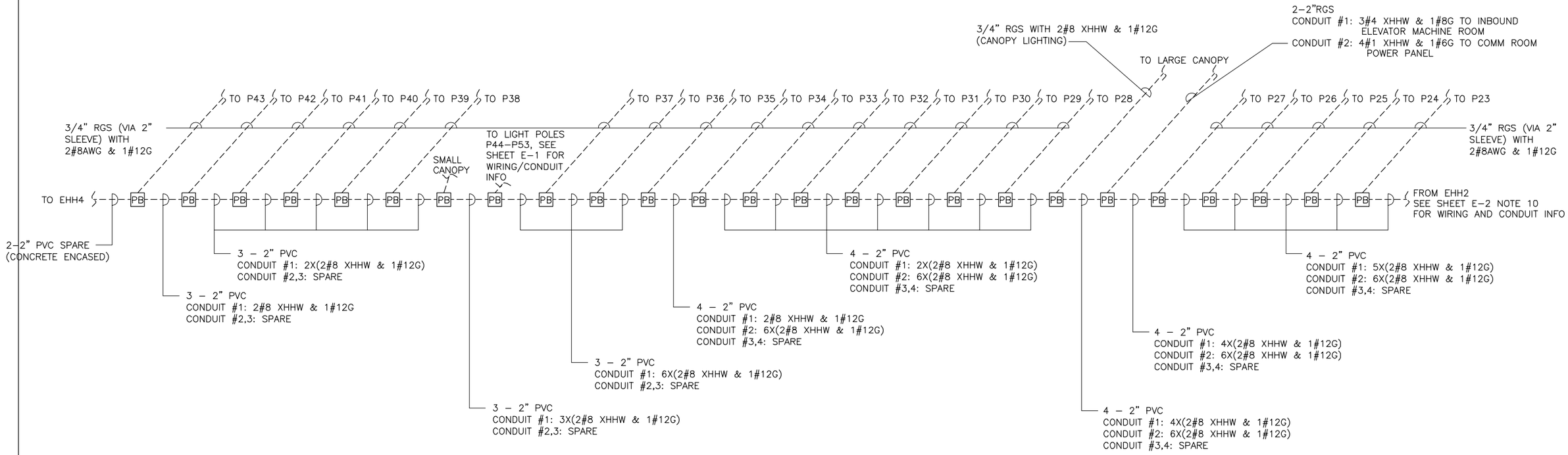

90% SUBMITTAL
NOT FOR CONSTRUCTION

ISSUE	DATE	DESCRIPTION	BY	CHKD.	APP.

JACOBS
343 CONGRESS STREET
BOSTON, MA 02110
(617) 242–9222

MASSACHUSETTS BAY TRANSPORTATION AUTHORITY

FITCHBURG COMMUTER RAIL LINE
IMPROVEMENT PROJECT
CONTRACT NO. G67CN01

SOUTH ACTON STATION
INBOUND PLATFORM
WIRING

HNTB
300 APOLLO DRIVE
CHELMSFORD, MA 01824
(978) 905–4000

PROJECT MANAGER Date

MASSACHUSETTS BAY TRANSPORTATION AUTHORITY
APPROVED BY:
PROJECT MANAGER Date

HORIZ:	DES. BY	DR. BY	CHK. BY	PLAN NO.	ISSUE
VERT:	RJW	JPH	WTG		
DATE: 9/8/11				SHEET E–14	

FILE NAME: P:\MBTA\2008\E2X37800\CAD\700CADD\702STATIONS\South Acton\Electrical\90%\ E14.dwg
PLOT DATE: Aug 18, 2011 – 10:35am

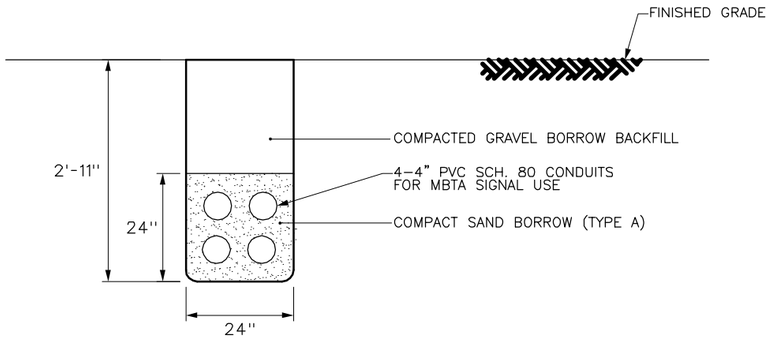

NOTE:
- DUCTBANK UNDER INBOUND/OUTBOUND PLATFORMS ONLY
- PROVIDE CONDUIT SPACERS FOR 4W-4" DUCTBANK

COMM - 4W-4" DUCTBANK DETAIL
NOT TO SCALE

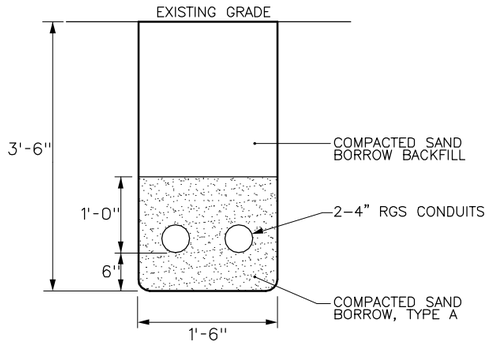

TYPICAL DUCTBANK DETAIL
NOT TO SCALE

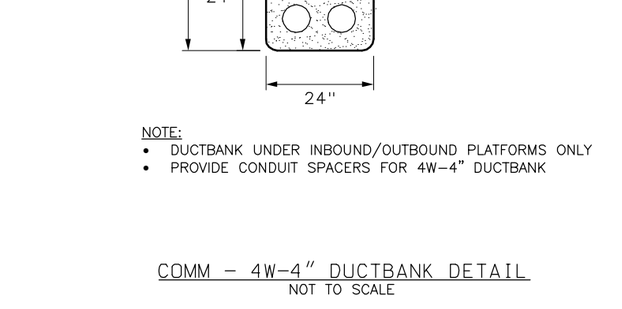

6W-3" DUCTBANK DETAIL
NOT TO SCALE

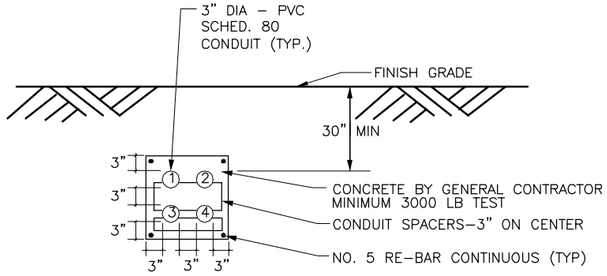

4W-3" DUCTBANK DETAIL
NOT TO SCALE

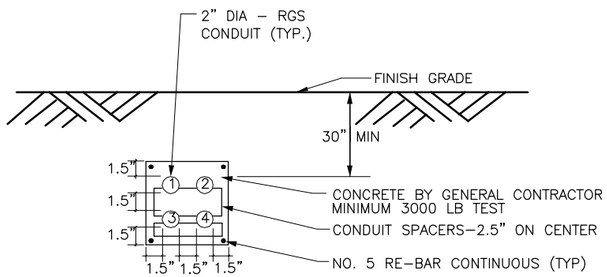

4W-2" DUCTBANK DETAIL
NOT TO SCALE

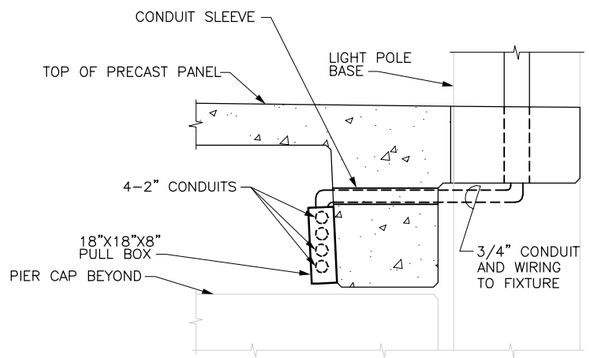

SECTION

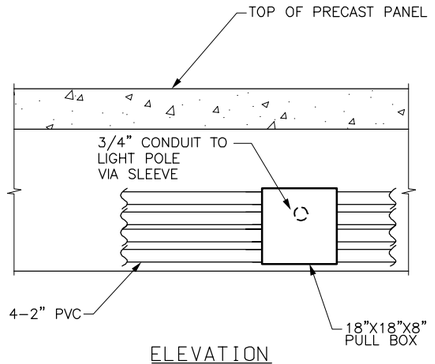

ELEVATION

PULL BOX INSTALLATION - UNDER PLATFORM
NOT TO SCALE

- ALL ENCLOSURES SHALL BE NEMA 3R RATED WITH VANDAL PROOF SCREWS.
- DETAIL IS TYPICAL FOR ALL PULL BOXES AT PLATFORM AREA

10W-2" DUCTBANK DETAIL
NOT TO SCALE

NOTES:
1. FOR GENERAL CONDUIT ROUTING SEE SHEET E-2.
2. FOR INDIVIDUAL LIGHTING (WIRE SIZES) CIRCUITS AND ROUTING SEE SHEETS E-8 AND E-9
3. CONDUITS, JUNCTION BOXES AND PENETRATIONS IN PRECAST PLATFORM SIMILAR ON OUTBOUND PLATFORM SIDE.
4. IN CANOPY AREAS ROUTE THIS CONDUIT VIA 3?" RSC (OUTER) CONDUIT, SEE SHEET E-5

90% SUBMITTAL
NOT FOR CONSTRUCTION

FILE NAME: P:\MBTA\2009\E2X37800\CAD\700CADD\702STATIONS\South Acton\Electrical\90%\ E15.dwg
PLOT DATE: Aug 18, 2011 - 10:36am

ISSUE	DATE	DESCRIPTION	BY	CHKD.	APP.

JACOBS 343 CONGRESS STREET BOSTON, MA 02110 (617) 242-9222

MASSACHUSETTS BAY TRANSPORTATION AUTHORITY

FITCHBURG COMMUTER RAIL LINE IMPROVEMENT PROJECT CONTRACT NO. G67CN01

SOUTH ACTON STATION DUCTBANK DETAILS

HNTB 300 APOLLO DRIVE CHELMSFORD, MA 01824 (978) 905-4000

PROJECT MANAGER Date

MASSACHUSETTS BAY TRANSPORTATION AUTHORITY
APPROVED BY:
PROJECT MANAGER Date

HORIZ:	DES. BY	DR. BY	CHK. BY	PLAN NO. 169657	ISSUE
VERT:	RJW	JPH	RJW		
DATE: 9/8/11				SHEET E-15	

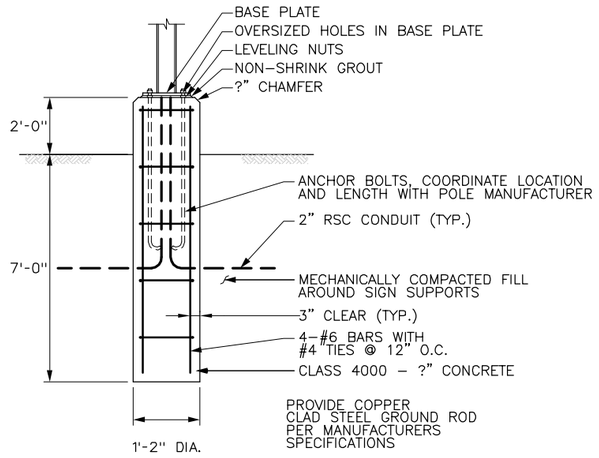

LIGHT POLE FOUNDATION DETAIL - PARKING AREA
NOT TO SCALE

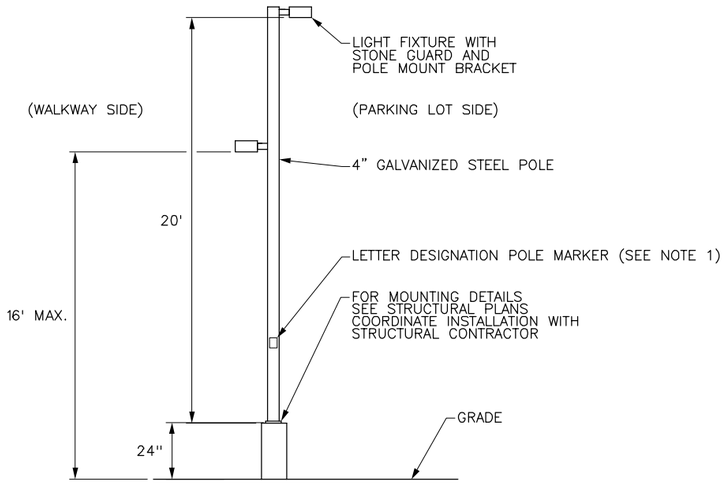

LIGHT STANDARD DETAIL #2
TYPICAL FOR WALKWAY/PARKING AREA
NOT TO SCALE

90% SUBMITTAL
NOT FOR CONSTRUCTION

ISSUE	DATE	DESCRIPTION	BY	CHKD.	APP.

JACOBS
343 CONGRESS STREET
BOSTON, MA 02110
(617) 242-9222

MASSACHUSETTS BAY TRANSPORTATION AUTHORITY

FITCHBURG COMMUTER RAIL LINE
IMPROVEMENT PROJECT
CONTRACT NO. G67CN01

SOUTH ACTON STATION
ELECTRICAL DETAILS

HNTB
300 APOLLO DRIVE
CHELMSFORD, MA 01824
(978) 905-4000

PROJECT MANAGER Date

MASSACHUSETTS BAY TRANSPORTATION AUTHORITY
APPROVED BY:
PROJECT MANAGER Date

HORIZ:	DES. BY	DR. BY	CHK. BY	PLAN NO.	ISSUE
VERT:	RJW	JPH	WTG		
DATE: 9/8/11				SHEET E-16	

FILE NAME: P:\MBTA\2008\E2X37800\CAD\700CADD\702STATIONS\South Acton\Electrical\90%\ E16.dwg
PLOT DATE: Aug 18, 2011 - 10:37am

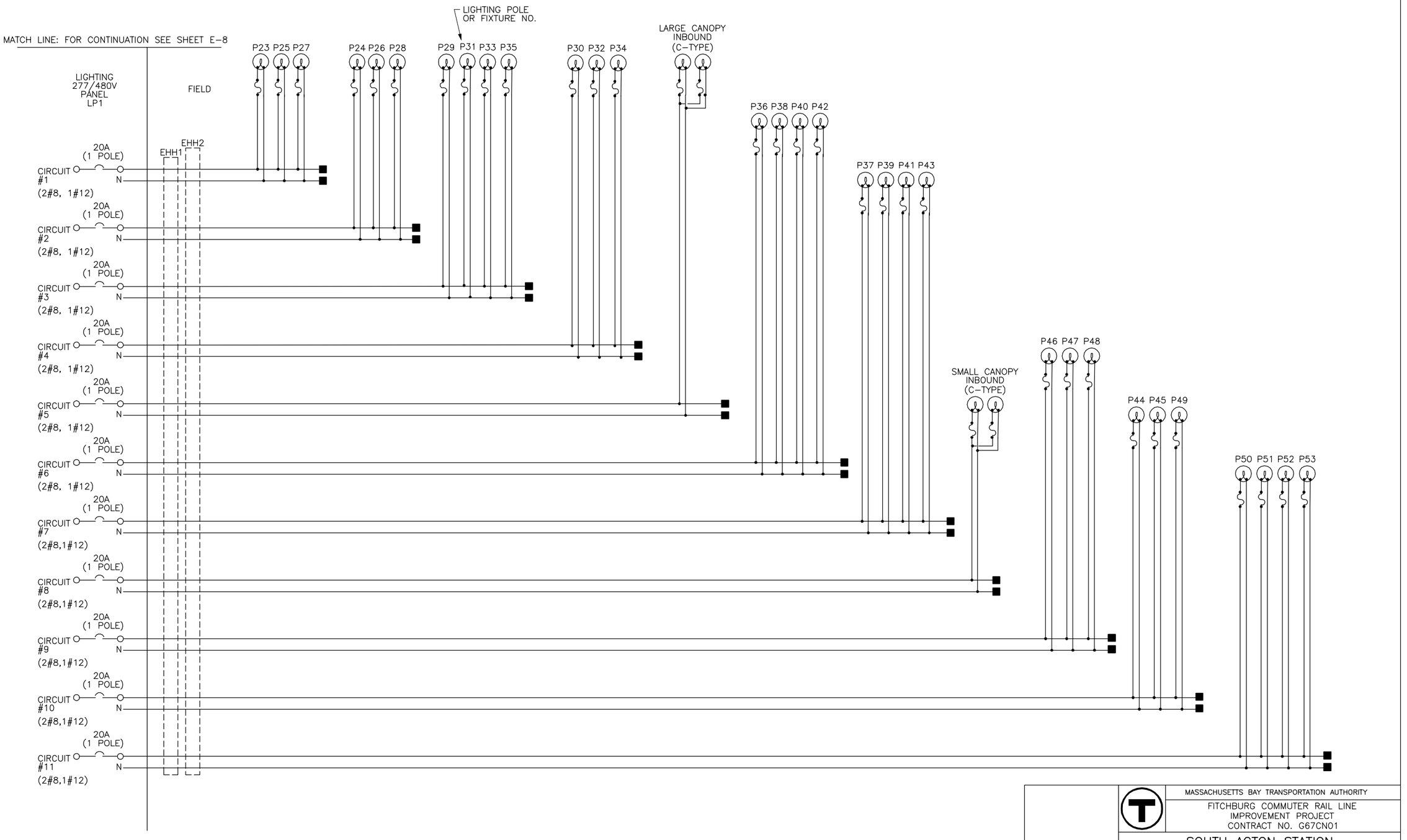

LEGEND:

P#	POLE NUMBER
C#	FULL CANOPY FIXTURE NUMBER
HH#	HAND HOLE NUMBER

SPLICE JOINT

FUSE

LIGHTING FIXTURE WITH LAMP

CIRCUIT BREAKER

NOTES

1. GROUNDING CONDUCTORS NOT SHOWN FOR CLARITY
2. FUSE AMPERE RATING SHALL BE 2A TIME DELAY, MIN 480V CLASS.
3. FOR LIGHT FIXTURE INFORMATION SEE LIGHT FIXTURE SCHEDULE SHEET E-19.

90% SUBMITTAL
NOT FOR CONSTRUCTION

ISSUE	DATE	DESCRIPTION	BY	CHKD.	APP.

JACOBS
343 CONGRESS STREET
BOSTON, MA 02110
(617) 242-9222

MASSACHUSETTS BAY TRANSPORTATION AUTHORITY

FITCHBURG COMMUTER RAIL LINE
IMPROVEMENT PROJECT
CONTRACT NO. G67CN01

SOUTH ACTON STATION
LIGHTING SCHEMATIC DIAGRAM
SHEET 1

HNTB
300 APOLLO DRIVE
CHELMSFORD, MA 01824
(978) 905-4000

PROJECT MANAGER Date

MASSACHUSETTS BAY TRANSPORTATION AUTHORITY
APPROVED BY:
PROJECT MANAGER Date

HORIZ:	DES. BY	DR. BY	CHK. BY	PLAN NO. 169659	ISSUE
VERT:	RJW	JPH	RJW		
DATE: 9/8/11				SHEET E-17	

FILE NAME: P:\MBTA\2008\E2X37800\CAD\700CADD\702STATIONS\South Acton\Electrical\90%\ E17.dwg
PLOT DATE: Aug 18, 2011 - 10:38am

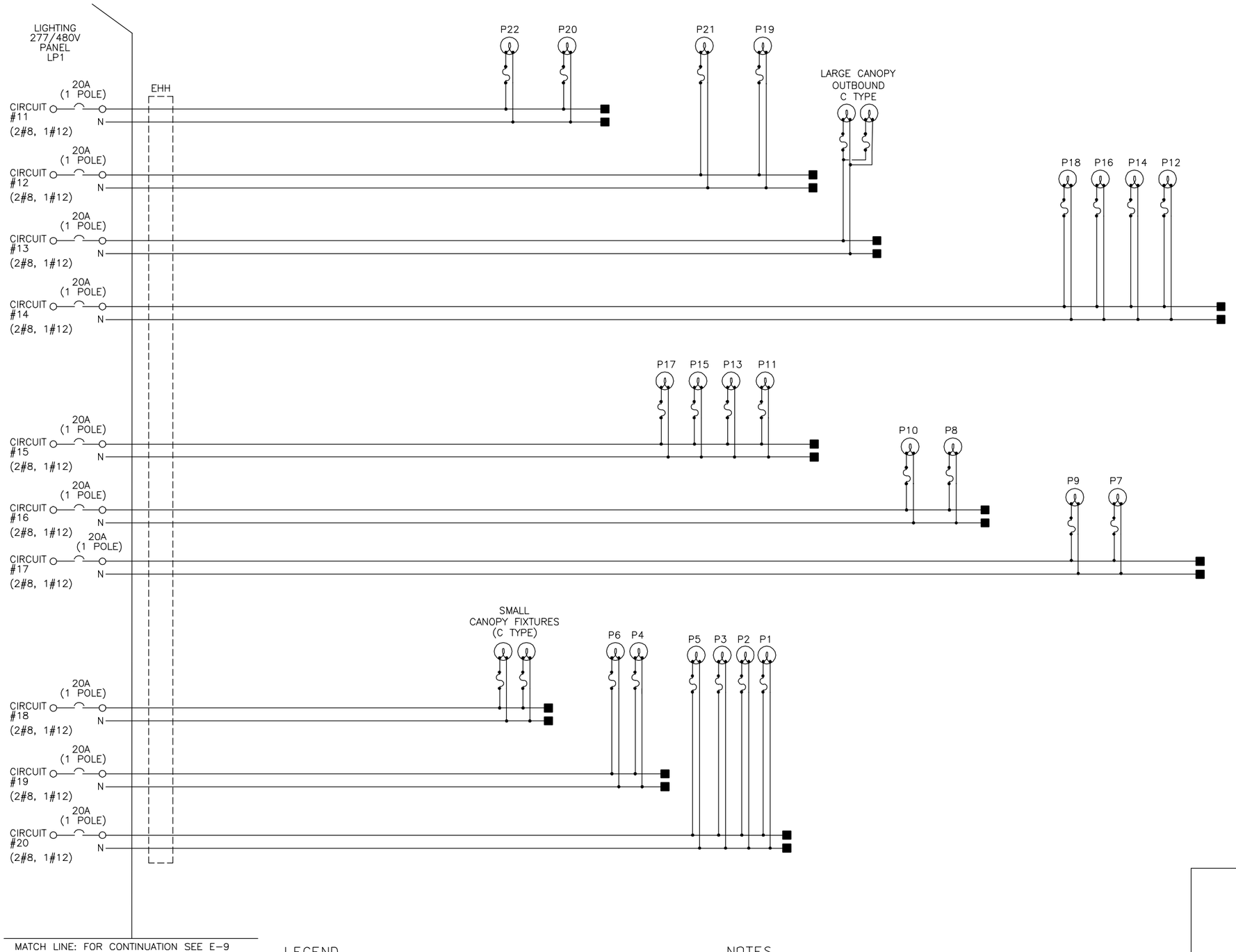

LEGEND

P#	POLE NUMBER
C#	FULL CANOPY FIXTURE NUMBER
HH#	HAND HOLE NUMBER

SPLICE JOINT
FUSE
LIGHTING FIXTURE WITH LAMP
CIRCUIT BREAKER

NOTES

1. GROUNDING CONDUCTORS NOT SHOWN FOR CLARITY
2. FUSE AMPERE RATING SHALL BE 2A TIME DELAY, MIN 480V CLASS.

90% SUBMITTAL
NOT FOR CONSTRUCTION

FILE NAME: P:\MBTA\2008\E2X37800\CAD\700CADD\702STATIONS\South Acton\Electrical\90%\ E18.dwg
PLOT DATE: Aug 18, 2011 - 10:39am

ISSUE	DATE	DESCRIPTION	BY	CHKD.	APP.

JACOBS
343 CONGRESS STREET
BOSTON, MA 02110
(617) 242-9222

MASSACHUSETTS BAY TRANSPORTATION AUTHORITY

FITCHBURG COMMUTER RAIL LINE
IMPROVEMENT PROJECT
CONTRACT NO. G67CN01

SOUTH ACTON STATION
LIGHTING SCHEMATIC DIAGRAM
SHEET 2

HNTB
300 APOLLO DRIVE
CHELMSFORD, MA 01824
(978) 905-4000

MASSACHUSETTS BAY TRANSPORTATION AUTHORITY
APPROVED BY:
PROJECT MANAGER Date

HORIZ:	DES. BY	DR. BY	CHK. BY	PLAN NO. 169658	ISSUE
VERT:	RJW	JPH	RJW		
DATE: 9/8/11				SHEET E-18	

LIGHT FIXTURE SCHEDULE

SYMBOL	MANUFACTURER / CATALOG No.	LAMP TYPE / WATTS	MOUNTING	VOLTS	REMARKS
P	KIM/1SA/SAR2/150MH277/LG-P/LS/PRA12-34188 GARDCO - (EQUIVALENT) COOPER - (EQUIVALENT)	METAL HALIDE 150W	POLE	277	PLATFORM/WALKWAY LIGHTING SINGLE FIXTURE-FOWARD THROW/FULL CUT-OFF
P	KIM/2SB/SAR2/150MH277/LG-P/LS/PRA12-34188 GARDCO - (EQUIVALENT) COOPER - (EQUIVALENT)	METAL HALIDE 150W (QTY 2)	POLE	277	PLATFORM/WALKWAY LIGHTING TWIN FIXTURE
P'	KIM/1SA/SAR2/150MH277/LG-P/LS/PRA20-4188 GARDCO - (EQUIVALENT) COOPER - (EQUIVALENT)	METAL HALIDE 150W	POLE	277	PARKING/AREA LIGHTING SINGLE FIXTURE
P'	KIM/2SB/SAR2/150MH277/LG-P/LS/PRA20-4188 GARDCO - (EQUIVALENT) COOPER - (EQUIVALENT)	METAL HALIDE 150W (QTY 2)	POLE	277	PARKING/AREA LIGHTING TWIN FIXTURE
C	FORUM - QUAW-100MH-2-WM-277-CF-DS INSIGHT - WT5230BB4-CBA-WVS-240V COOPER - (EQUIVALENT)	METAL HALIDE 100W	SURFACE	277	HALF CANOPY AREA UPLIGHT FINISH TO BE APPROVED BY ARCHITECT
R	REBELLE - STREAMLINE 6000	METAL HALIDE 100W	SURFACE	277	INDIRECT RAMP FIXTURE

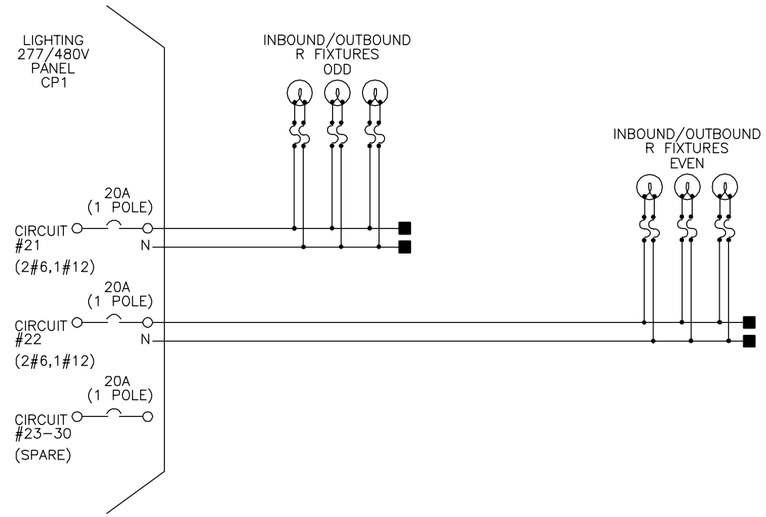

90% SUBMITTAL
NOT FOR CONSTRUCTION

FILE NAME: P:\MBTA\2008\E2X37800\CAD\700CADD\702STATIONS\South Acton\Electrical\90%\ E19.dwg
PLOT DATE: Aug 18, 2011 - 10:39am

MASSACHUSETTS BAY TRANSPORTATION AUTHORITY

FITCHBURG COMMUTER RAIL LINE
IMPROVEMENT PROJECT
CONTRACT NO. G67CN01

SOUTH ACTON STATION
LIGHTING SCHEMATIC DIAGRAM
SHEET 3

ISSUE	DATE	DESCRIPTION	BY	CHKD.	APP.

HNTB
300 APOLLO DRIVE
CHELMSFORD, MA 01824
(978) 905-4000

PROJECT MANAGER Date

MASSACHUSETTS BAY TRANSPORTATION AUTHORITY
APPROVED BY:
PROJECT MANAGER Date

JACOBS
343 CONGRESS STREET
BOSTON, MA 02110
(617) 242-9222

HORIZ:	DES. BY	DR. BY	CHK. BY
VERT:	RJW	JPH	RJW
DATE: 9/8/11			

PLAN NO. 169660
SHEET E-19
ISSUE

PANEL CIRCUIT AND LOAD SCHEDULE

SERVICE : MAIN DISTRIBUTION
DESIGNATION : MAIN DISTRIBUTION PANEL – MDP
LOCATION : ELECTRIC ROOM

LOAD			VA PER PHASE			TRIP	POLES	WIRE SIZE		WIRE SIZE	POLES	TRIP	VA PER PHASE			LOAD		
DESCRIPTION	QTY	UNIT V.A.	A	B	C								A	B	C	UNIT V.A.	QTY	DESCRIPTION
ELEVATOR – INBOUND	–	3300	1100			80	3	3	1 2 3 4 5 6	3	3	80	1100			3300	–	ELEVATOR – OUTBOUND
				1100										1100				
					1100										1100			
LIGHTING CONTACTOR – (LP1)	–	1275	425			100	3	1	7 8 9 10 11 12	3	3	75	1500			4500	–	45 KVA TRANSFORMER
				425										1500				
					425										1500			
–	–	–	–			–	–	–	13 14	–	–	–	–			–	–	–
–	–	–		–		–	–	–	15 16	–	–	–		–		–	–	–
–	–	–			–	–	–	–	17 18	–	–	–			–	–	–	–
–	–	–	–			–	–	–	19 20	–	–	–	–			–	–	–
–	–	–		–		–	–	–	21 22	–	–	–		–		–	–	–
–	–	–			–	–	–	–	23 24	–	–	–			–	–	–	–
–	–	–	–			–	–	–	25 26	–	–	–	–			–	–	–
–	–	–		–		–	–	–	27 28	–	–	–		–		–	–	–
–	–	–			–	–	–	–	29 30	–	–	–			–	–	–	–
–	–	–	–			–	–	–	31 32	–	–	–	–			–	–	–
–	–	–		–		–	–	–	33 34	–	–	–		–		–	–	–
–	–	–			–	–	–	–	35 36	–	–	–			–	–	–	–
–	–	–	–			–	–	–	37 38	–	–	–	–			–	–	–
–	–	–		–		–	–	–	39 40	–	–	–		–		–	–	–
–	–	–			–	–	–	–	41 42	–	–	–			–	–	–	–
		VA SUBTOTAL LEFT	1525	1525	1525								2700	2700	2700	VA SUBTOTAL RIGHT		TOTAL CONNECTED LOAD; AMPERES 15.25
														12675		SUBTOTAL		

VOLTAGE: 480/277 CYCLE: 60 Hz PHASE: 3 WIRES: 3
SOLID NEUTRAL: 400 AMPS
MAIN LUGS: 400 AMP FRAME – AMP TRIP
AIC 20 KA MAIN COPPER BUS: 400 AMPS
MAINS: TOP [X] BOTTOM [ ]

MANUFACTURER: SQUARE D
TYPE AND CAT. NO. : –
NO EQUAL: [ ] APPROVED EQUAL: [X]
MOUNTING: SURFACE: [X] FLUSH: [ ]

1. BOLT ON BRANCH BREAKERS
2. COPPER BUS ONLY

PANEL CIRCUIT AND LOAD SCHEDULE

SERVICE : LIGHTING
DESIGNATION : LIGHTING PANEL – LP
LOCATION : ELECTRIC ROOM

LOAD			VA PER PHASE			TRIP	POLES	WIRE SIZE		WIRE SIZE	POLES	TRIP	VA PER PHASE			LOAD		
DESCRIPTION	QTY	UNIT V.A.	A	B	C								A	B	C	UNIT V.A.	QTY	DESCRIPTION
P23, P25, P27	–	450	450			20	1	8	1 2	8	1	20	450			–	–	P24, P26, P28
P29, P31, P33, P35	–	600		600		20	1	8	3 4	8	1	20		450		–	–	P30, P32, P34
MAIN CANOPY INBOUND	–	700			700	20	1	8	5 6	8	1	20			600	–	–	P36, P38, P40, P42
P37, P39, P41, P43	–	600	600			20	1	8	7 8	8	1	20	600			–	–	SMALL CANOPY INBOUND
P46, P47, P48	–	600		600		20	1	8	9 10	8	1	20		450		–	–	P44, P45, P49
P50, P51, P52, P53	–	600			600	20	1	8	11 12	8	1	20			700	–	–	INB/OUT–BLP(1)
LEVEL 2 BRIDGE	–	700	700			20	1	8	13 14	8	1	20	700			–	–	INB/OUT–BLP(2)
P22, P20	–	300		300		20	1	8	15 16	8	1	20		300		–	–	P21, P19
MAIN CANOPY OUTBOUND	–	800			800	20	1	8	17 18	8	1	20			600	–	–	P12, P14, P16, P18
P13, P15, P17	–	450	450			20	1	8	19 20	8	1	20	300			–	–	P8, P10
P7, P9	–	300		300		20	1	8	21 22	8	1	20		600		–	–	SMALL CANOPY OUTBOUND
P4, P6	–	300			300	20	1	8	23 24	8	1	20			600	–	–	P1, P2, P3, P5
SPARE	–	–	–			20	1	–	25 26	–	–	–	–			–	–	SPARE
SPARE	–	–		–		20	1	–	27 28	–	–	–		–		–	–	SPARE
SPARE	–	–			–	20	1	–	29 30	–	–	–			–	–	–	SPARE
		VA SUBTOTAL LEFT	2200	1800	2400								2050	1800	2500	VA SUBTOTAL RIGHT		TOTAL CONNECTED LOAD; AMPERES 15.34
														12750		SUBTOTAL		

VOLTAGE: 480/277 CYCLE: 60 Hz PHASE: 3 WIRES: 4
SOLID NEUTRAL: 100 AMPS
MAIN LUGS: 100 AMP FRAME – AMP TRIP
AIC 20 KA MAIN COPPER BUS: 100 AMPS
MAINS: TOP [X] BOTTOM [ ]

MANUFACTURER: SQUARE D
TYPE AND CAT. NO. : –
NO EQUAL: [ ] APPROVED EQUAL: [X]
MOUNTING: SURFACE: [X] FLUSH: [ ]

1. BOLT ON BRANCH BREAKERS
2. COPPER BUS ONLY

90% SUBMITTAL
NOT FOR CONSTRUCTION

ISSUE	DATE	DESCRIPTION	BY	CHKD.	APP.

JACOBS 343 CONGRESS STREET BOSTON, MA 02110 (617) 242-9222

MASSACHUSETTS BAY TRANSPORTATION AUTHORITY

FITCHBURG COMMUTER RAIL LINE
IMPROVEMENT PROJECT
CONTRACT NO. G67CN01

SOUTH ACTON STATION
ELECTRICAL PANEL SCHEDULES
SHEET 1 OF 2

HNTB 300 APOLLO DRIVE CHELMSFORD, MA 01824 (978) 905-4000

PROJECT MANAGER Date

MASSACHUSETTS BAY TRANSPORTATION AUTHORITY
APPROVED BY:
PROJECT MANAGER Date

HORIZ:	DES. BY	DR. BY	CHK. BY	PLAN NO. 169661	ISSUE
VERT:	RJW	JPH	RJW		
DATE: 9/8/11				SHEET E–20	

FILE NAME: P:\MBTA\2009\E2X37800\CAD\700CADD\702STATIONS\South Acton\Electrical\90%\ E20,21,23.dwg
PLOT DATE: Aug 18, 2011 – 10:40am

PANEL CIRCUIT AND LOAD SCHEDULE

SERVICE :
DESIGNATION : DP1
LOCATION : COMMUNICATIONS ROOM

LOAD DESCRIPTION	QTY	UNIT V.A.	VA PER PHASE A	VA PER PHASE B	VA PER PHASE C	TRIP	POLES	WIRE SIZE	WIRE SIZE	POLES	TRIP	VA PER PHASE A	VA PER PHASE B	VA PER PHASE C	UNIT V.A.	QTY	LOAD DESCRIPTION
SPARE	–	–	–			20	1	–	–	1	20	–			–	–	SPARE
SPARE	–	–		–		20	1	–	–	1	20		–		–	–	SPARE
SPARE	–	–			–	20	1	–	–	1	20			–	–	–	SPARE
SPARE	–	–	–			20	1	–	–	1	20	–			–	–	SPARE
SPARE	–	–		–		20	1	–	–	1	20		–		–	–	SPARE
SPARE	–	–			–	20	1	–	–	1	20			–	–	–	SPARE
SPARE	–	–	–			20	1	–	–	1	20	–			–	–	SPARE
SPARE	–	–		–		20	1	–	–	1	20		–		–	–	SPARE
SPARE	–	–			–	20	1	–	–	1	20			–	–	–	SPARE
SPARE	–	–	–			20	1	–	–	1	20	–			–	–	SPARE
SPARE	–	–		–		20	1	–	–	1	20		–		–	–	SPARE
SPARE	–	–			–	20	1	–	–	1	20			–	–	–	SPARE
SPARE	–	–	–			20	1	–	–	1	20	–			–	–	SPARE
SPARE	–	–		–		20	1	–	–	1	20		–		–	–	SPARE
SPARE	–	–			–	20	1	–	–	1	20			–	–	–	SPARE
		VA SUBTOTAL LEFT	–	–	–				–	–	–				VA SUBTOTAL RIGHT		TOTAL CONNECTED LOAD; AMPERES –
											–				SUBTOTAL		

VOLTAGE: 120/208 CYCLE: 60 Hz PHASE: 3 WIRES: 4
SOLID NEUTRAL: 100 AMPS
MAIN LUGS: 100 AMP FRAME 100 AMP TRIP
AIC 20 KA MAIN COPPER BUS: 100 AMPS
MAINS: TOP [X] BOTTOM [ ]

MANUFACTURER: SQUARE D
TYPE AND CAT. NO. : –
NO EQUAL: [ ] APPROVED EQUAL: [X]
MOUNTING: SURFACE: [X] FLUSH: [ ]

1. BOLT ON BRANCH BREAKERS
2. COPPER BUS ONLY

PANEL CIRCUIT AND LOAD SCHEDULE

SERVICE :
DESIGNATION : DP2
LOCATION : ELECTRIC ROOM

LOAD DESCRIPTION	QTY	UNIT V.A.	VA PER PHASE A	VA PER PHASE B	VA PER PHASE C	TRIP	POLES	WIRE SIZE	WIRE SIZE	POLES	TRIP	VA PER PHASE A	VA PER PHASE B	VA PER PHASE C	UNIT V.A.	QTY	LOAD DESCRIPTION
TEMP. MBTA COMM. SHED	–	–	–			50	2	6	–	1	20	–			–	–	SPARE
				–					–	1	20		–		–	–	SPARE
SPARE	–	–			–	20	1	–	–	1	20			–	–	–	SPARE
SPARE	–	–	–			20	1	–	–	1	20	–			–	–	SPARE
SPARE	–	–		–		20	1	–	–	1	20		–		–	–	SPARE
SPARE	–	–			–	20	1	–	–	1	20			–	–	–	SPARE
SPARE	–	–	–			20	1	–	–	1	20	–			–	–	SPARE
SPARE	–	–		–		20	1	–	–	1	20		–		–	–	SPARE
SPARE	–	–			–	20	1	–	–	1	20			–	–	–	SPARE
SPARE	–	–	–			20	1	–	–	1	20	–			–	–	SPARE
SPARE	–	–		–		20	1	–	–	1	20		–		–	–	SPARE
SPARE	–	–			–	20	1	–	–	1	20			–	–	–	SPARE
SPARE	–	–	–			20	1	–	–	1	20	–			–	–	SPARE
SPARE	–	–		–		20	1	–	–	1	20		–		–	–	SPARE
SPARE	–	–			–	20	1	–	–	1	20			–	–	–	SPARE
		VA SUBTOTAL LEFT	–	–	–				–	–	–				VA SUBTOTAL RIGHT		TOTAL CONNECTED LOAD; AMPERES –
											–				SUBTOTAL		

VOLTAGE: 120/208 CYCLE: 60 Hz PHASE: 3 WIRES: 4
SOLID NEUTRAL: 100 AMPS
MAIN LUGS: 100 AMP FRAME 100 AMP TRIP
AIC 20 KA MAIN COPPER BUS: 100 AMPS
MAINS: TOP [X] BOTTOM [ ]

MANUFACTURER: SQUARE D
TYPE AND CAT. NO. : –
NO EQUAL: [ ] APPROVED EQUAL: [X]
MOUNTING: SURFACE: [X] FLUSH: [ ]

1. BOLT ON BRANCH BREAKERS
2. COPPER BUS ONLY

PANEL CIRCUIT AND LOAD SCHEDULE

SERVICE :
DESIGNATION : DP3
LOCATION : MBTA COMMUNICATIONS SHED

LOAD DESCRIPTION	QTY	UNIT V.A.	VA PER PHASE A	VA PER PHASE B	VA PER PHASE C	TRIP	POLES	WIRE SIZE	WIRE SIZE	POLES	TRIP	VA PER PHASE A	VA PER PHASE B	VA PER PHASE C	UNIT V.A.	QTY	LOAD DESCRIPTION
INBOUND VMS SIGN	–	–	–			20	1	–	–	1	20	–			–	–	OUTBOUND VMS SIGN
INBOUND VMS SIGN	–	–		–		20	1	–	–	1	20		–		–	–	OUTBOUND VMS SIGN
SPARE	–	–			–	20	1	–	–	1	20			–	–	–	SPARE
SPARE	–	–	–			20	1	–	–	1	20	–			–	–	SPARE
SPARE	–	–		–		20	1	–	–	1	20		–		–	–	SPARE
SPACE	–	–			–	–	–	–	–	–	–			–	–	–	SPACE
SPACE	–	–	–			–	–	–	–	–	–	–			–	–	SPACE
SPACE	–	–		–		–	–	–	–	–	–		–		–	–	SPACE
SPACE	–	–			–	–	–	–	–	–	–			–	–	–	SPACE
SPACE	–	–	–			–	–	–	–	–	–	–			–	–	SPACE
SPACE	–	–		–		–	–	–	–	–	–		–		–	–	SPACE
SPACE	–	–			–	–	–	–	–	–	–			–	–	–	SPACE
SPACE	–	–	–			–	–	–	–	–	–	–			–	–	SPACE
SPACE	–	–		–		–	–	–	–	–	–		–		–	–	SPACE
SPACE	–	–			–	–	–	–	–	–	–			–	–	–	SPACE
		VA SUBTOTAL LEFT	–	–	–				–	–	–				VA SUBTOTAL RIGHT		TOTAL CONNECTED LOAD; AMPERES –
											–				SUBTOTAL		

VOLTAGE: 120/208 CYCLE: 60 Hz PHASE: 3 WIRES: 4
SOLID NEUTRAL: 100 AMPS
MAIN LUGS: 100 AMP FRAME 50 AMP TRIP
AIC 20 KA MAIN COPPER BUS: 100 AMPS
MAINS: TOP [X] BOTTOM [ ]

MANUFACTURER: SQUARE D
TYPE AND CAT. NO. : –
NO EQUAL: [ ] APPROVED EQUAL: [X]
MOUNTING: SURFACE: [X] FLUSH: [ ]

1. BOLT ON BRANCH BREAKERS
2. COPPER BUS ONLY

90% SUBMITTAL
NOT FOR CONSTRUCTION

MASSACHUSETTS BAY TRANSPORTATION AUTHORITY
FITCHBURG COMMUTER RAIL LINE IMPROVEMENT PROJECT
CONTRACT NO. G67CN01

SOUTH ACTON STATION ELECTRICAL PANEL SCHEDULES SHEET 2 OF 2

ISSUE	DATE	DESCRIPTION	BY	CHKD.	APP.

HNTB 300 APOLLO DRIVE CHELMSFORD, MA 01824 (978) 905-4000
PROJECT MANAGER Date

MASSACHUSETTS BAY TRANSPORTATION AUTHORITY
APPROVED BY:
PROJECT MANAGER Date

JACOBS 343 CONGRESS STREET BOSTON, MA 02110 (617) 242-9222

HORIZ:	DES. BY	DR. BY	CHK. BY	PLAN NO.	ISSUE
VERT:	RJW	JPH	RJW		
DATE: 9/8/11				SHEET E-21	

FILE NAME: P:\MBTA\2008\E2X37800\CAD\700CADD\702STATIONS\South Acton\Electrical\90%\ E20,21,23.dwg
PLOT DATE: Aug 18, 2011 – 10:41am

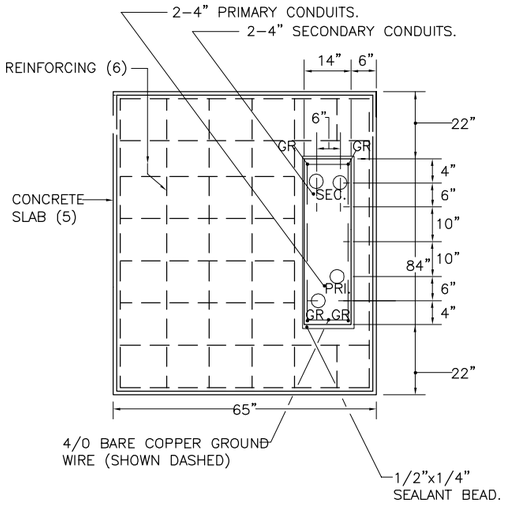

NSTAR PADMOUNT TRANSFORMER FOUNDATION
N.T.S

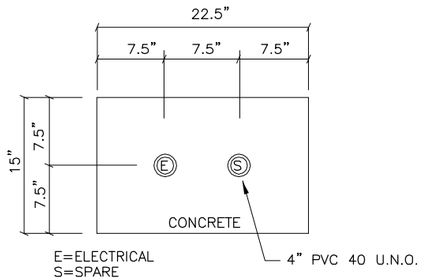

E=ELECTRICAL
S=SPARE

SECTION A–A

NOTE:
CONDUCTORS TO BE FURNISHED BY NSTAR
3C–5KV –INSULATED PRIMARY FEEDER CABLE

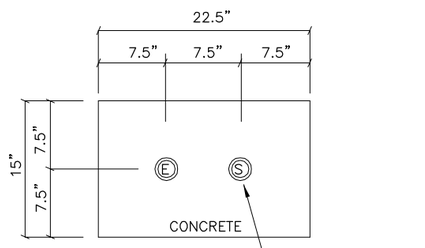

SECTION B–B

E=ELECTRICAL
S=SPARE
(CONDUIT E WITH 4# 600KCMIL XHHW CABLES)

90% SUBMITTAL
NOT FOR CONSTRUCTION

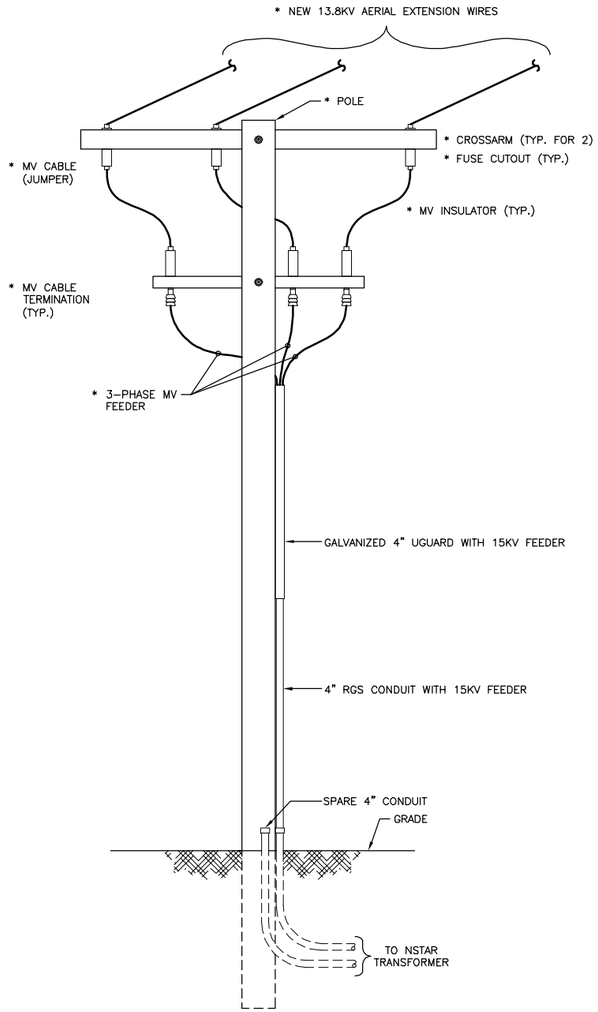

* DENOTES ITEM PROVIDED BY NSTAR

RISER POLE DETAIL
NTS

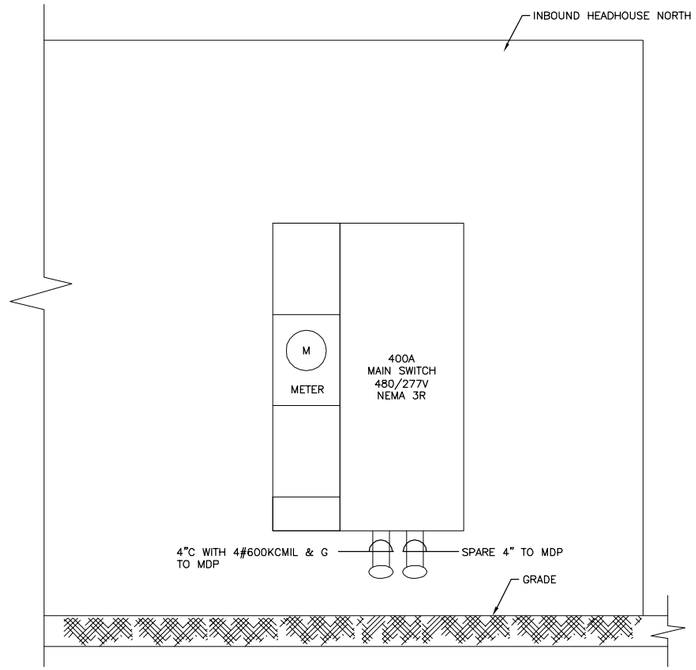

METERING/MAIN DISCONNECT
NTS

MASSACHUSETTS BAY TRANSPORTATION AUTHORITY

FITCHBURG COMMUTER RAIL LINE
IMPROVEMENT PROJECT
CONTRACT NO. G67CN01

SOUTH ACTON STATION
ELECTRICAL SERVICE DETAILS

ISSUE	DATE	DESCRIPTION	BY	CHKD.	APP.

HNTB
300 APOLLO DRIVE
CHELMSFORD, MA 01824
(978) 905–4000

PROJECT MANAGER Date

MASSACHUSETTS BAY TRANSPORTATION AUTHORITY
APPROVED BY:
PROJECT MANAGER Date

JACOBS
343 CONGRESS STREET
BOSTON, MA 02110
(617) 242–9222

HORIZ:	DES. BY	DR. BY	CHK. BY	PLAN NO.	ISSUE
VERT:	RJW	JPH	RJW		
DATE: 9/8/11				SHEET E–22	

FILE NAME: P:\MBTA\2009\E2X37800\CAD\700CADD\702STATIONS\South Acton\Electrical\90%\E22.dwg
PLOT DATE: Aug 18, 2011 – 10:43am

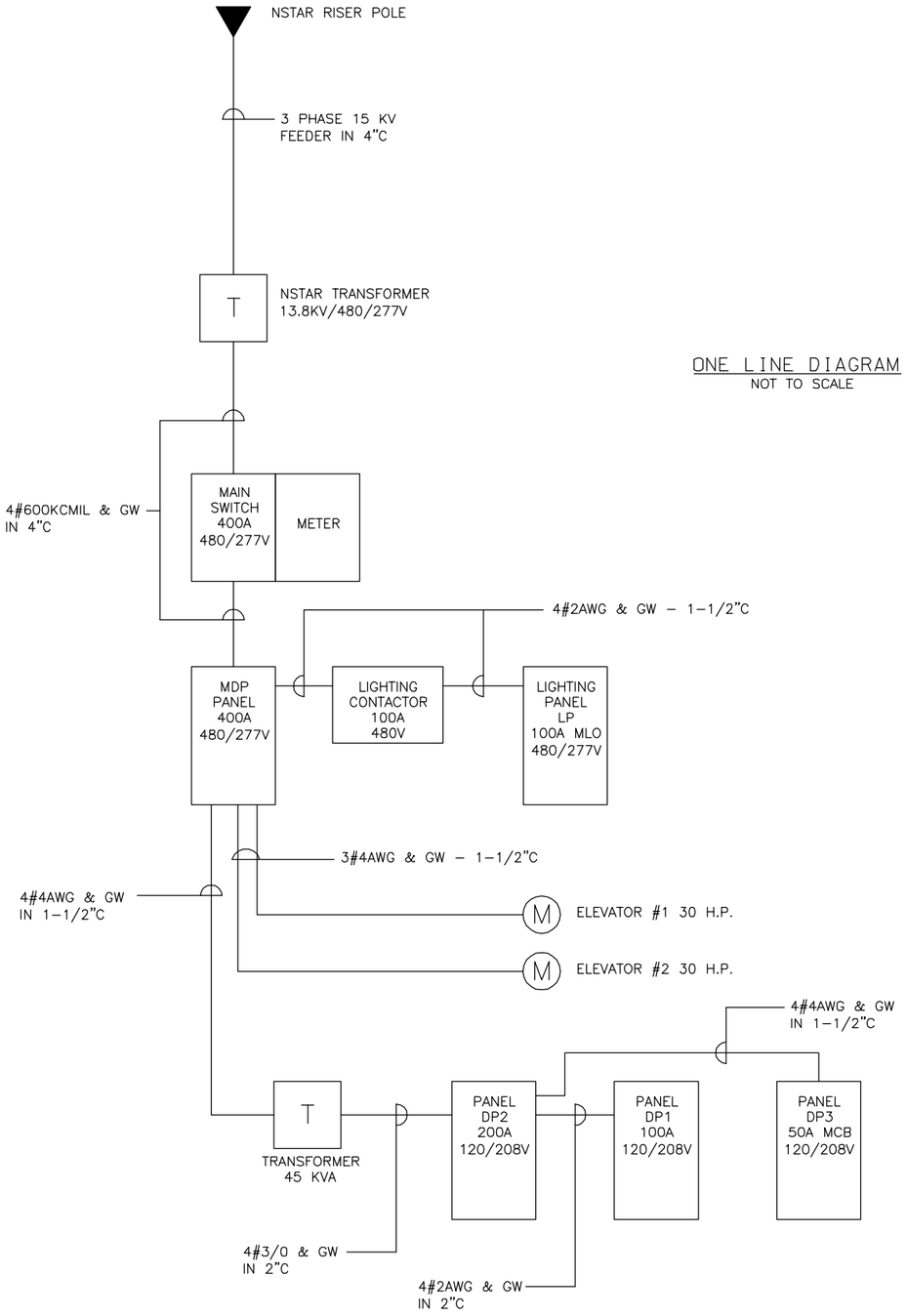

ONE LINE DIAGRAM
NOT TO SCALE

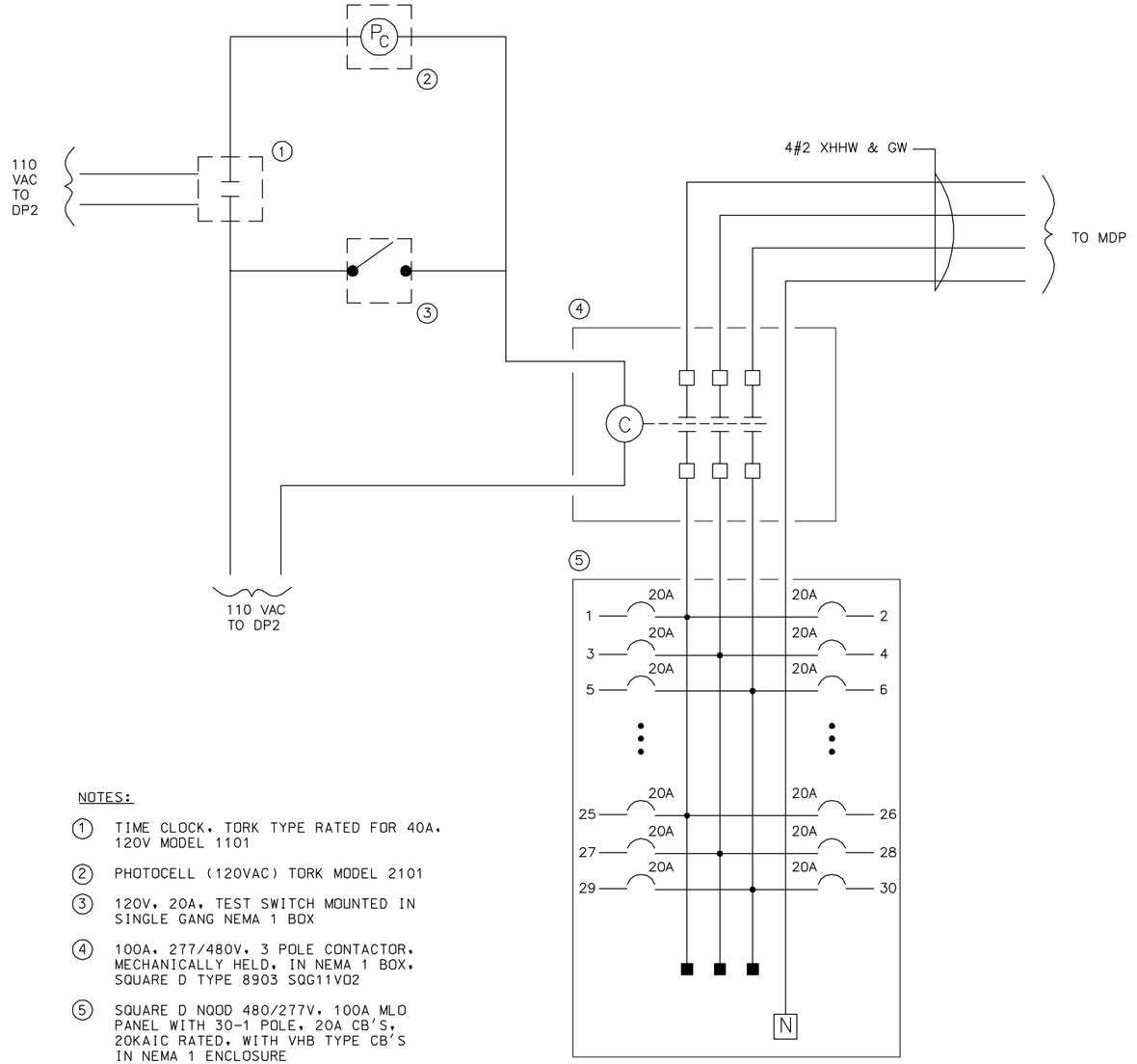

NOTES:

1. TIME CLOCK, TORK TYPE RATED FOR 40A, 120V MODEL 1101
2. PHOTOCELL (120VAC) TORK MODEL 2101
3. 120V, 20A, TEST SWITCH MOUNTED IN SINGLE GANG NEMA 1 BOX
4. 100A, 277/480V, 3 POLE CONTACTOR, MECHANICALLY HELD, IN NEMA 1 BOX, SQUARE D TYPE 8903 SQG11VO2
5. SQUARE D NQOD 480/277V, 100A MLO PANEL WITH 30–1 POLE, 20A CB'S, 20KAIC RATED, WITH VHB TYPE CB'S IN NEMA 1 ENCLOSURE

LIGHTING CONTROL DIAGRAM
NOT TO SCALE

90% SUBMITTAL
NOT FOR CONSTRUCTION

FILE NAME: P:\MBTA\2008\E2X37800\CAD\700CADD\702STATIONS\South Acton\Electrical\90%\ E20,21,23.dwg
PLOT DATE: Aug 18, 2011 – 10:42am

ISSUE	DATE	DESCRIPTION	BY	CHKD.	APP.

MASSACHUSETTS BAY TRANSPORTATION AUTHORITY

FITCHBURG COMMUTER RAIL LINE
IMPROVEMENT PROJECT
CONTRACT NO. G67CN01

SOUTH ACTON STATION
ONE LINE DIAGRAM
AND LIGHTING CONTROL

HNTB
300 APOLLO DRIVE
CHELMSFORD, MA 01824
(978) 905-4000

JACOBS
343 CONGRESS STREET
BOSTON, MA 02110
(617) 242-9222

MASSACHUSETTS BAY TRANSPORTATION AUTHORITY
APPROVED BY:

PROJECT MANAGER Date

PROJECT MANAGER Date

HORIZ:	DES. BY	DR. BY	CHK. BY	PLAN NO.	ISSUE
VERT:	RJW	JPH	RJW		
DATE: 9/8/11				SHEET E–23	

SIDE 'B'

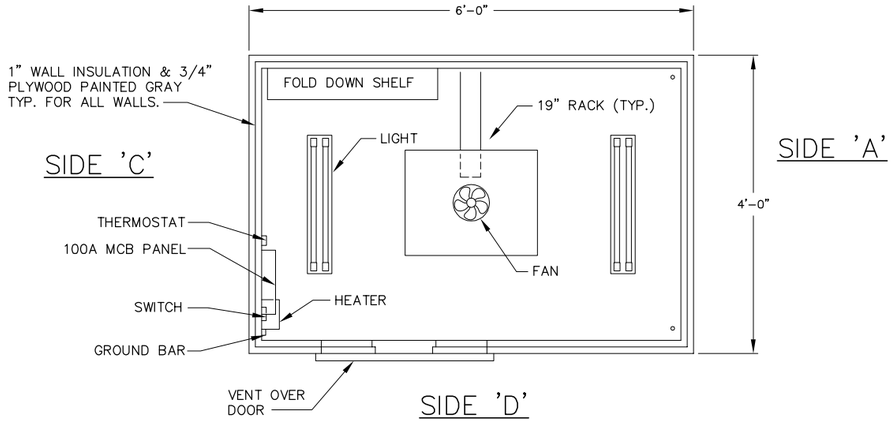

SIDE 'D'

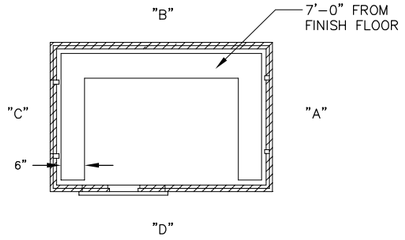

WIRE CHASE

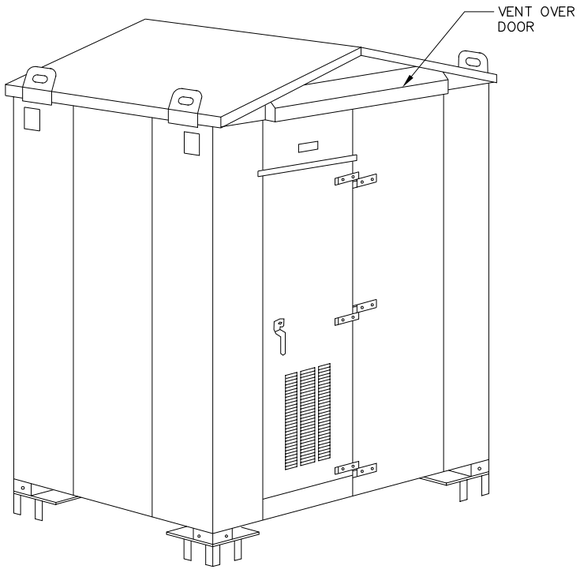

PLAN VIEW

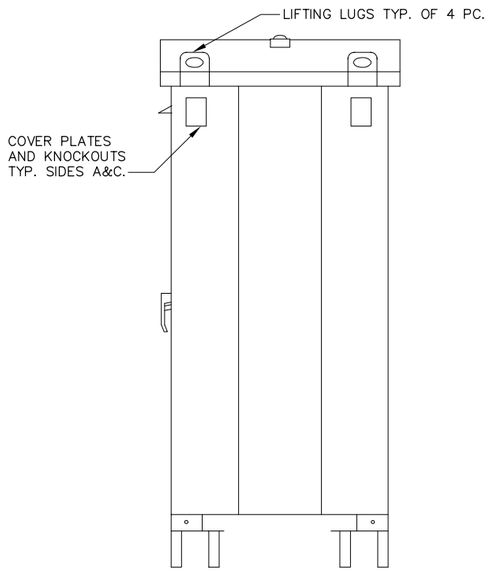

OUTSIDE VIEW
SIDE 'A'

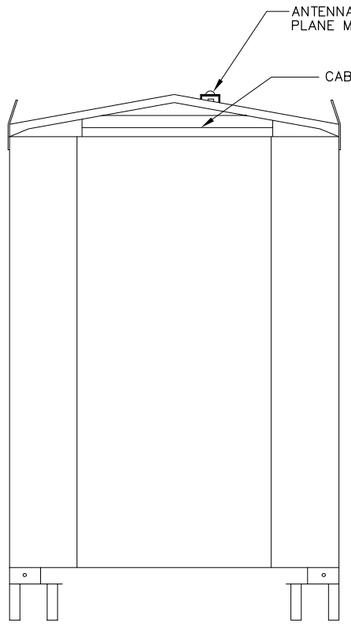

OUTSIDE VIEW
SIDE 'B'

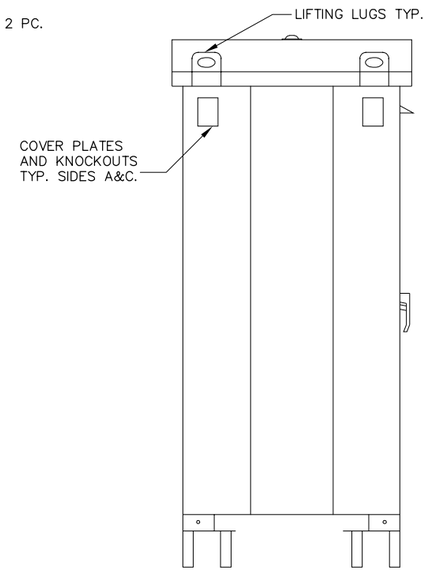

OUTSIDE VIEW
SIDE 'C'

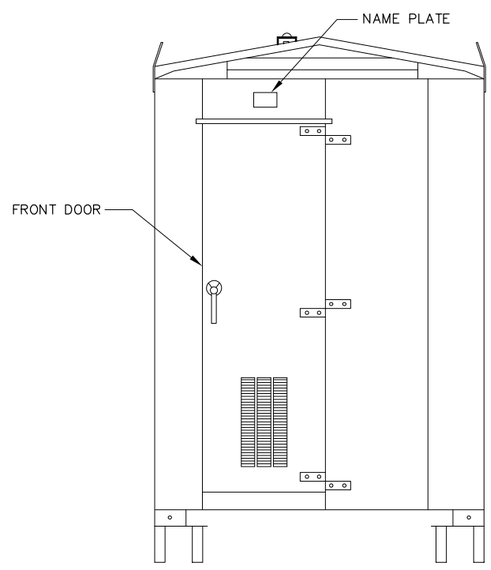

OUTSIDE VIEW
SIDE 'D'

90% SUBMITTAL
NOT FOR CONSTRUCTION

FILE NAME: P:\MBTA\2008\E2X37800\CAD\700CADD\702STATIONS\South Acton\Communications\ COM-01.dwg
PLOT DATE: Aug 05, 2011 - 12:12pm

ISSUE	DATE	DESCRIPTION	BY	CHKD.	APP.

JACOBS
343 CONGRESS STREET
BOSTON, MA 02110
(617) 242-9222

HNTB
300 APOLLO DRIVE
CHELMSFORD, MA 01824
(978) 905-4000

PROJECT MANAGER Date

MASSACHUSETTS BAY TRANSPORTATION AUTHORITY
APPROVED BY:
PROJECT MANAGER Date

MASSACHUSETTS BAY TRANSPORTATION AUTHORITY
FITCHBURG COMMUTER RAIL LINE
IMPROVEMENT PROJECT
CONTRACT NO. G67CN01

SOUTH ACTON STATION
TYPICAL COMMUNICATIONS EQUIPMENT SHELTER OUTSIDE VIEWS

HORIZ: AS SHOWN	DES. BY	DR. BY	CHK. BY	PLAN NO. 169671	ISSUE
VERT: NONE	MZ	KMB	DJS		
DATE: 9/8/11				SHEET COM-01	

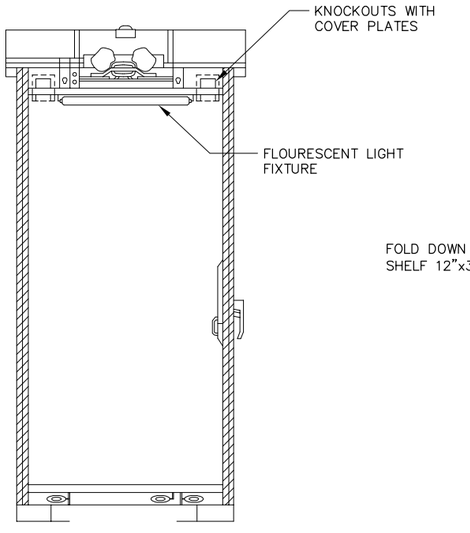

INSIDE VIEW
SIDE 'A'

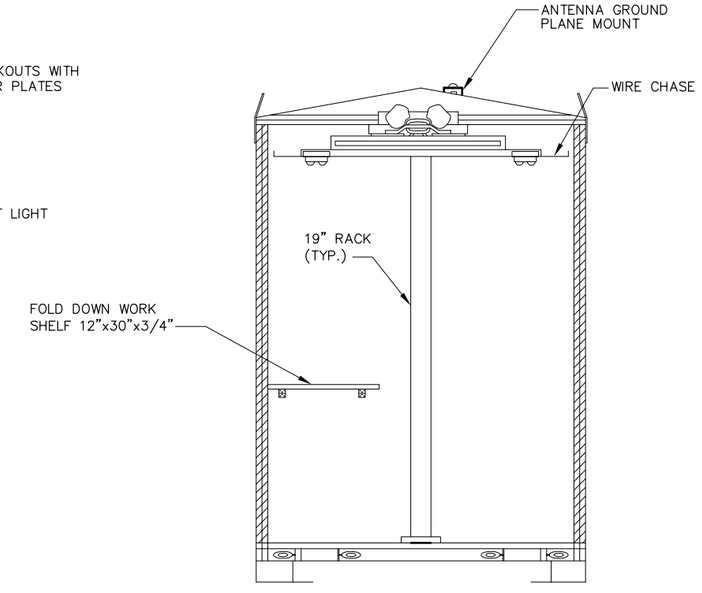

INSIDE VIEW
SIDE 'B'

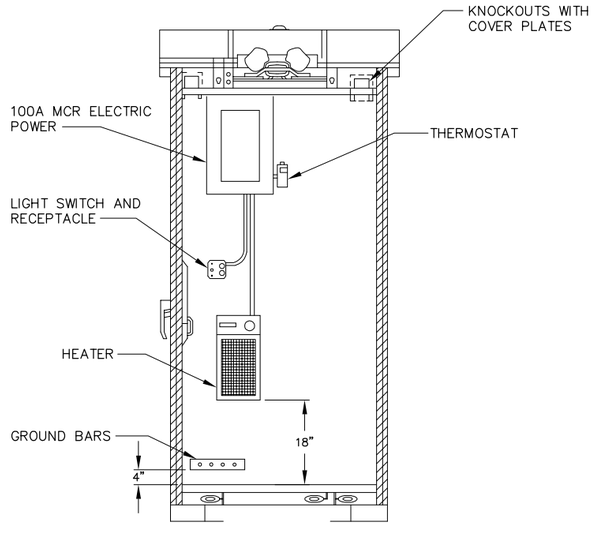

INSIDE VIEW
SIDE 'C'

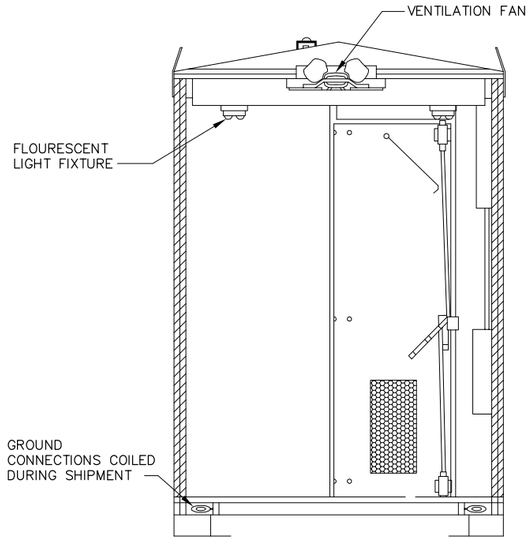

INSIDE VIEW
SIDE 'D'

90% SUBMITTAL
NOT FOR CONSTRUCTION

FILE NAME: P:\MBTA\2008\E2x37800\CAD\700CADD\702STATIONS\South Acton\Communications\ COM-02.dwg
PLOT DATE: Aug 05, 2011 - 12:13pm

ISSUE	DATE	DESCRIPTION	BY	CHKD.	APP.

JACOBS 343 CONGRESS STREET BOSTON, MA 02110 (617) 242-9222

MASSACHUSETTS BAY TRANSPORTATION AUTHORITY

FITCHBURG COMMUTER RAIL LINE
IMPROVEMENT PROJECT
CONTRACT NO. G67CN01

SOUTH ACTON STATION
TYPICAL COMMUNICATIONS EQUIPMENT SHELTER INSIDE VIEWS

HNTB 300 APOLLO DRIVE CHELMSFORD, MA 01824 (978) 905-4000

PROJECT MANAGER Date

MASSACHUSETTS BAY TRANSPORTATION AUTHORITY

APPROVED BY:

PROJECT MANAGER Date

HORIZ: AS SHOWN	DES. BY	DR. BY	CHK. BY
VERT: NONE	MZ	KMB	DJS
DATE: 9/8/11			

PLAN NO.

SHEET COM-02

ISSUE

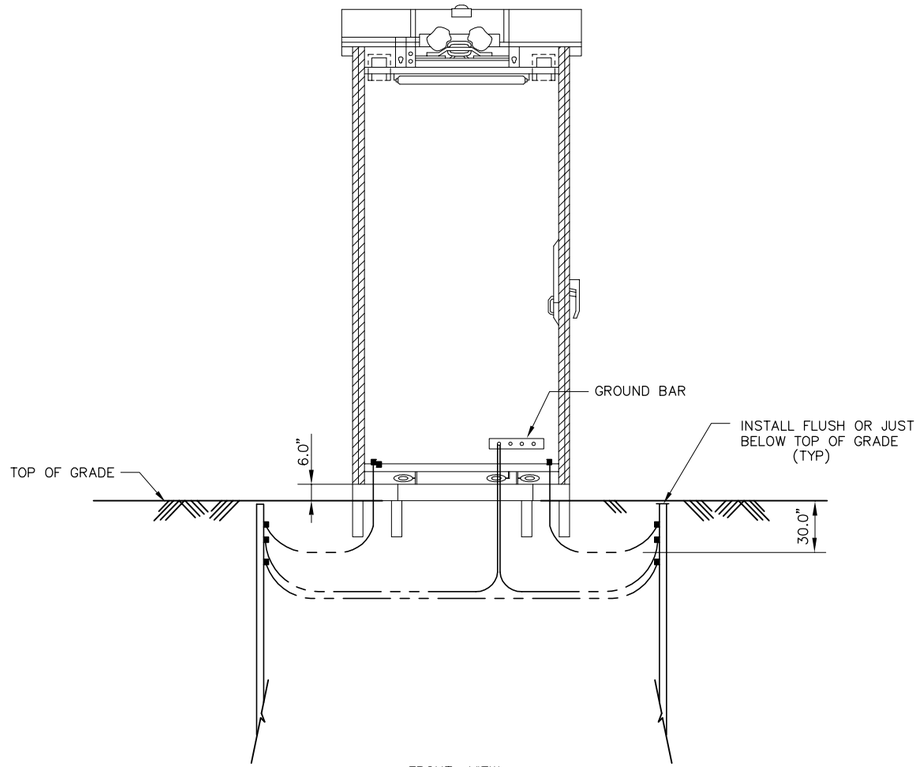

FRONT VIEW

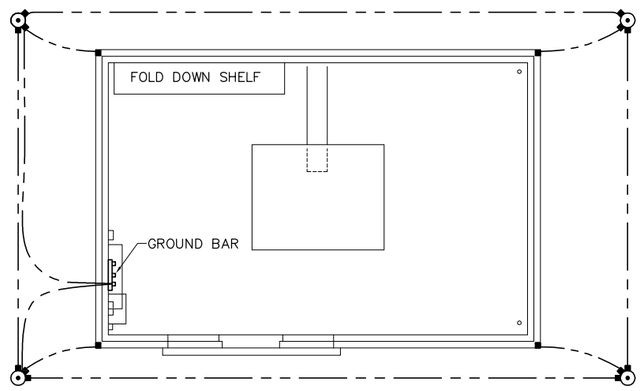

PLAN VIEW

LEGEND

- ⊙ 5/8" DIAMETER X 10' LONG COPPER CLAD GROUND ROD
- ■ EXOTHERMIC WELD
- —— – – —— # 6 BARE COPPER GROUND WIRE

NOTES:

1. TO INSTALL THE SHELTER IN ACCORDANCE WITH MANUFACTURE'S INSTALLATION INSTRUCTIONS
2. TO VERIFY FINAL ORIENTATION AND PLACEMENT OF THE SHELTER PRIOR TO PIER INSTALLATION.
3. THE FLOOR OF THE SHELTER SHALL BE 6" ABOVE FINISHED GRADE.
4. TO INSTALL CABLE ENTRANCE AS REQUIRED FOR POWER, FIBER, AND GROUNDS.

90% SUBMITTAL
NOT FOR CONSTRUCTION

FILE NAME: P:\MBTA\2008\E2X37800\CADD\700CADD\702STATIONS\South Acton\Communications\ COM-03.dwg
PLOT DATE: Aug 05, 2011 - 12:14pm

ISSUE	DATE	DESCRIPTION	BY	CHKD.	APP.

JACOBS
343 CONGRESS STREET
BOSTON, MA 02110
(617) 242-9222

MASSACHUSETTS BAY TRANSPORTATION AUTHORITY

FITCHBURG COMMUTER RAIL LINE
IMPROVEMENT PROJECT
CONTRACT NO. G67CN01

SOUTH ACTON STATION
TYPICAL COMMUNICATIONS EQUIPMENT SHELTER GROUNDING PLAN

HNTB
300 APOLLO DRIVE
CHELMSFORD, MA 01824
(978) 905-4000

PROJECT MANAGER Date

MASSACHUSETTS BAY TRANSPORTATION AUTHORITY
APPROVED BY:
PROJECT MANAGER Date

HORIZ: AS SHOWN	DES. BY	DR. BY	CHK. BY	PLAN NO. 169673	ISSUE
VERT: NONE	XXX	XXX	XXX		
DATE: 9/8/11				SHEET COM-03	

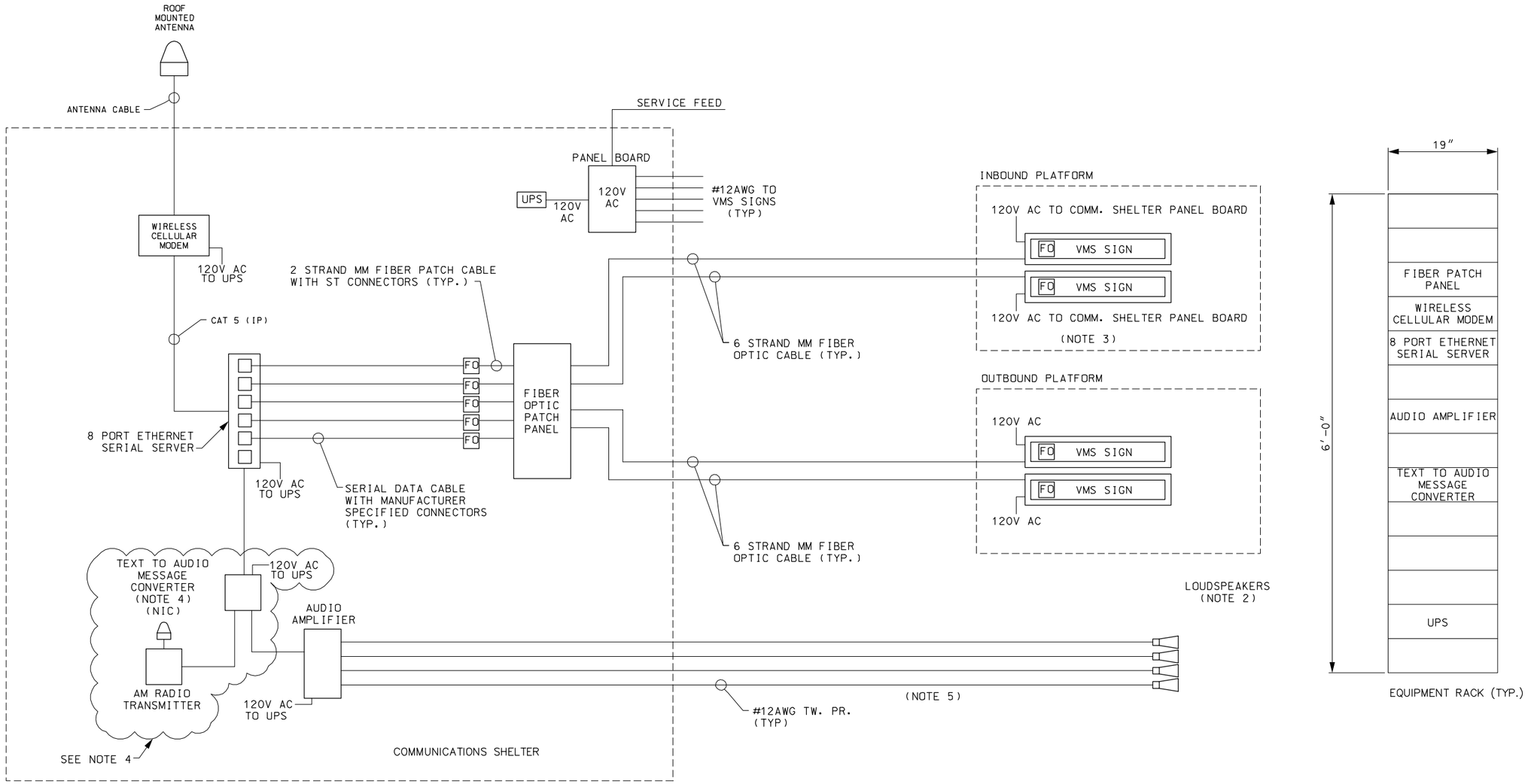

LEGEND:

FO FIBER OPTIC MINI-MODEM

MM MULTIMODE

NOTES:

1. EACH PAIR OF PLATFORM SIGNS ARE TO BE INSTALLED BACK TO BACK.
2. LOUDSPEAKERS ARE TO BE LOCATED AT VMS SIGN LOCATION.
3. EACH VMS SHALL INCLUDE A SMALL PATCH PANEL FOR TERMINATING AND PATCHING THE 6 STRAND MM FIBER OPTIC CABLE. FINAL LOCATION TO BE APPROVED BY THE ENGINEER.
4. TEXT TO AUDIO MESSAGE CONVERTER IS TO BE PROVIDED BY THE RAILROAD.
5. LOUDSPEAKER CABLING SHOWN DIAGRAMMATICALLY, ACTUAL AUDIO DISTRIBUTION CONFIGURATION MAY VARY.
6. ALL EXTERNAL CABLES SHALL BE IN 1"GRS CONDUIT.
7. REFER TO COMMUNICATION RACK LAYOUT DIAGRAM.

90% SUBMITTAL
NOT FOR CONSTRUCTION

MASSACHUSETTS BAY TRANSPORTATION AUTHORITY

FITCHBURG COMMUTER RAIL LINE
IMPROVEMENT PROJECT
CONTRACT NO. G67CN01

SOUTH ACTON STATION
VARIABLE MESSAGE SIGN
SYSTEM DIAGRAM

ISSUE	DATE	DESCRIPTION	BY	CHKD.	APP.

HNTB 300 APOLLO DRIVE CHELMSFORD, MA 01824 (978) 905-4000

JACOBS 343 CONGRESS STREET BOSTON, MA 02110 (617) 242-9222

MASSACHUSETTS BAY TRANSPORTATION AUTHORITY
APPROVED BY:
PROJECT MANAGER Date
PROJECT MANAGER Date

HORIZ: AS SHOWN	DES. BY	DR. BY	CHK. BY	PLAN NO. XXXX	ISSUE
VERT: NONE	XX	PJC	XX		
DATE: 9/8/11				SHEET COM-05	

FILE NAME: \\bosfil11\NAL_Proj\MBTA\2008\E2X37800\CAD\700CADD\702STATIONS\South Acton\Communications\ COM-05.dwg
PLOT DATE: Aug 17, 2011 - 11:33am

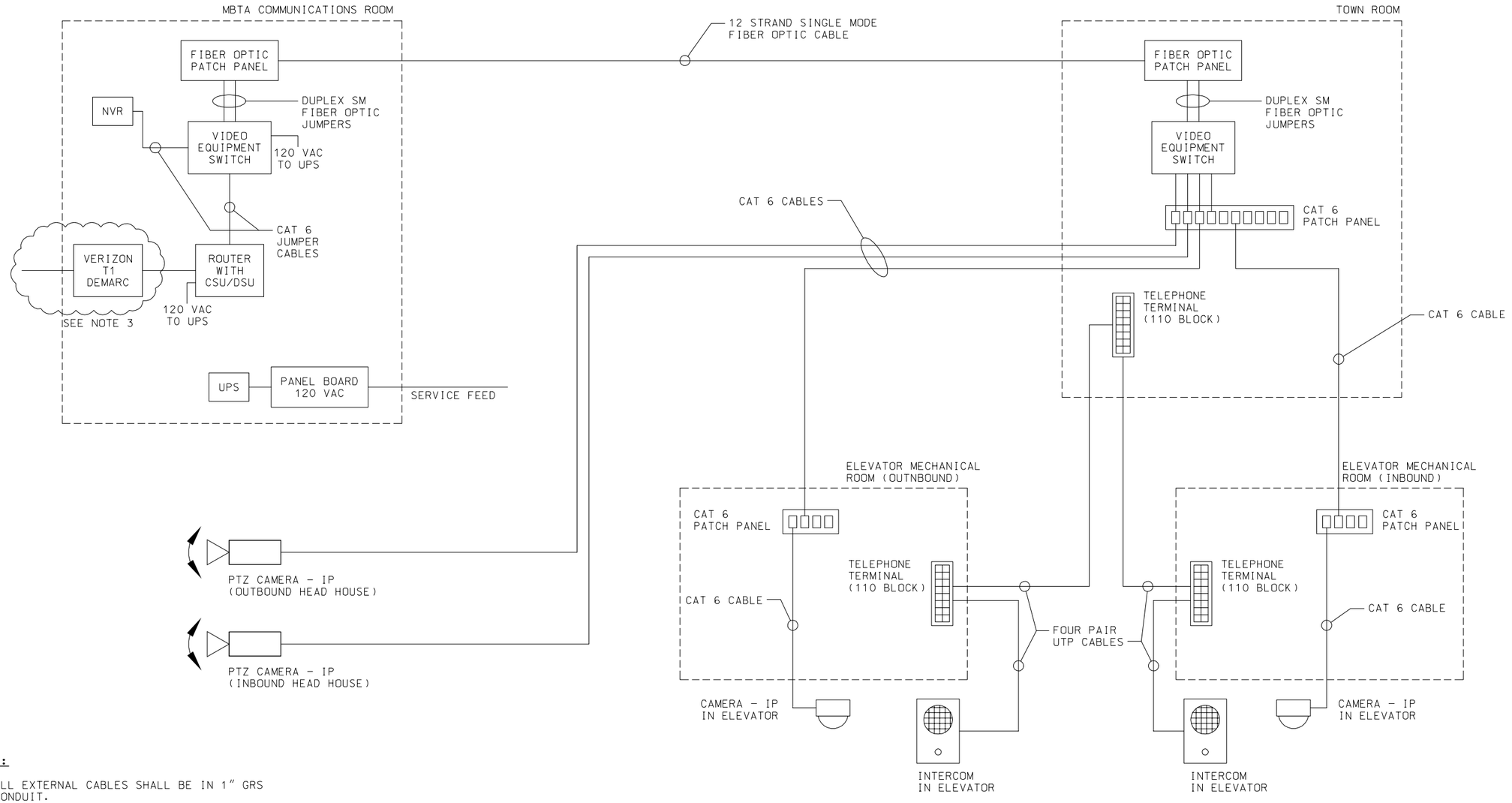

NOTES:

1. ALL EXTERNAL CABLES SHALL BE IN 1" GRS CONDUIT.
2. REFER TO ELECTRICAL PLANS FOR PATHWAYS AND DUCT BANK DETAILS.
3. T1 DEMARC AND INSTALLATION TO BE PROVIDED BY RAILROAD.

COMMUNITICATIONS SYSTEM DIAGRAM

90% SUBMITTAL
NOT FOR CONSTRUCTION

FILE NAME: P:\MBTA\2008\E2X37800\CAD\700CADD\702STATIONS\South Acton\Communications\ COM-06.dwg
PLOT DATE: Aug 17, 2011 - 2:59pm

MASSACHUSETTS BAY TRANSPORTATION AUTHORITY

FITCHBURG COMMUTER RAIL LINE
IMPROVEMENT PROJECT
CONTRACT NO. G67CN01

SOUTH ACTON STATION
COMMUNICATIONS
SYSTEM DIAGRAM

ISSUE	DATE	DESCRIPTION	BY	CHKD.	APP.

HNTB
300 APOLLO DRIVE
CHELMSFORD, MA 01824
(978) 905-4000

JACOBS
343 CONGRESS STREET
BOSTON, MA 02110
(617) 242-9222

MASSACHUSETTS BAY TRANSPORTATION AUTHORITY
APPROVED BY:
PROJECT MANAGER Date
PROJECT MANAGER Date

HORIZ: AS SHOWN	DES. BY	DR. BY	CHK. BY
VERT: NONE	XXX	CWB	XXX
DATE: 9/8/11			

PLAN NO.
ISSUE
SHEET COM-06

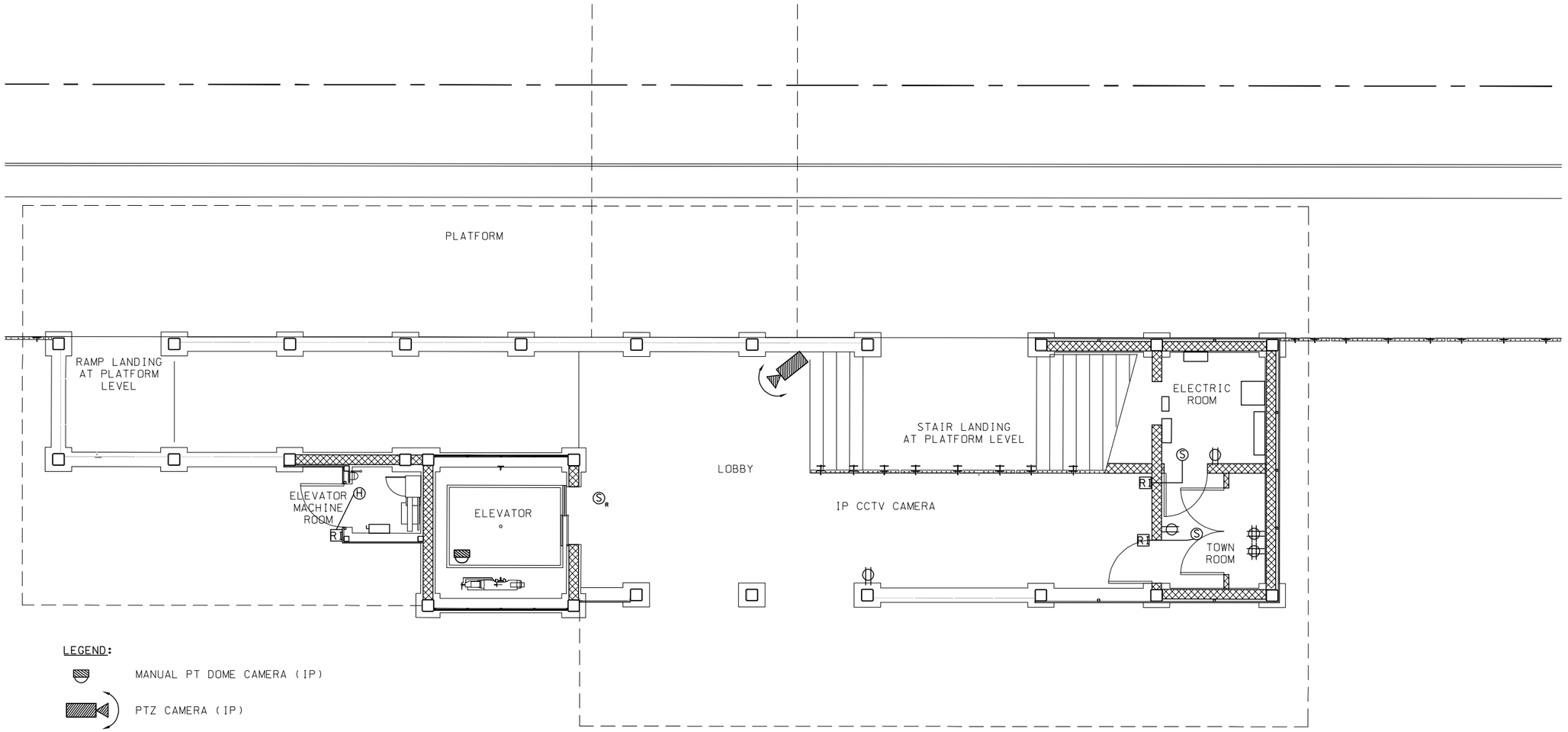

PLAN

0 2 4 8

SCALE: 1/4" = 1'-0"

90% SUBMITTAL
NOT FOR CONSTRUCTION

FILE NAME: P:\MBTA\2008\E2X37800\CAD\700CADD\702STATIONS\South Acton\Communications\ COM-07.dwg
PLOT DATE: Aug 17, 2011 - 11:37am

ISSUE	DATE	DESCRIPTION	BY	CHKD.	APP.

JACOBS
343 CONGRESS STREET
BOSTON, MA 02110
(617) 242-9222

MASSACHUSETTS BAY TRANSPORTATION AUTHORITY

FITCHBURG COMMUTER RAIL LINE
IMPROVEMENT PROJECT
CONTRACT NO. G67CN01

SOUTH ACTON STATION
FIRST FLOOR – OUTBOUND HEAD HOUSE CCTV PLAN

HNTB
300 APOLLO DRIVE
CHELMSFORD, MA 01824
(978) 905-4000

PROJECT MANAGER Date

MASSACHUSETTS BAY TRANSPORTATION AUTHORITY
APPROVED BY:
PROJECT MANAGER Date

HORIZ: AS SHOWN	DES. BY	DR. BY	CHK. BY	PLAN NO.	ISSUE
VERT: NONE	XXX	CWB	XXX		
DATE: 9/8/11				SHEET COM-07	

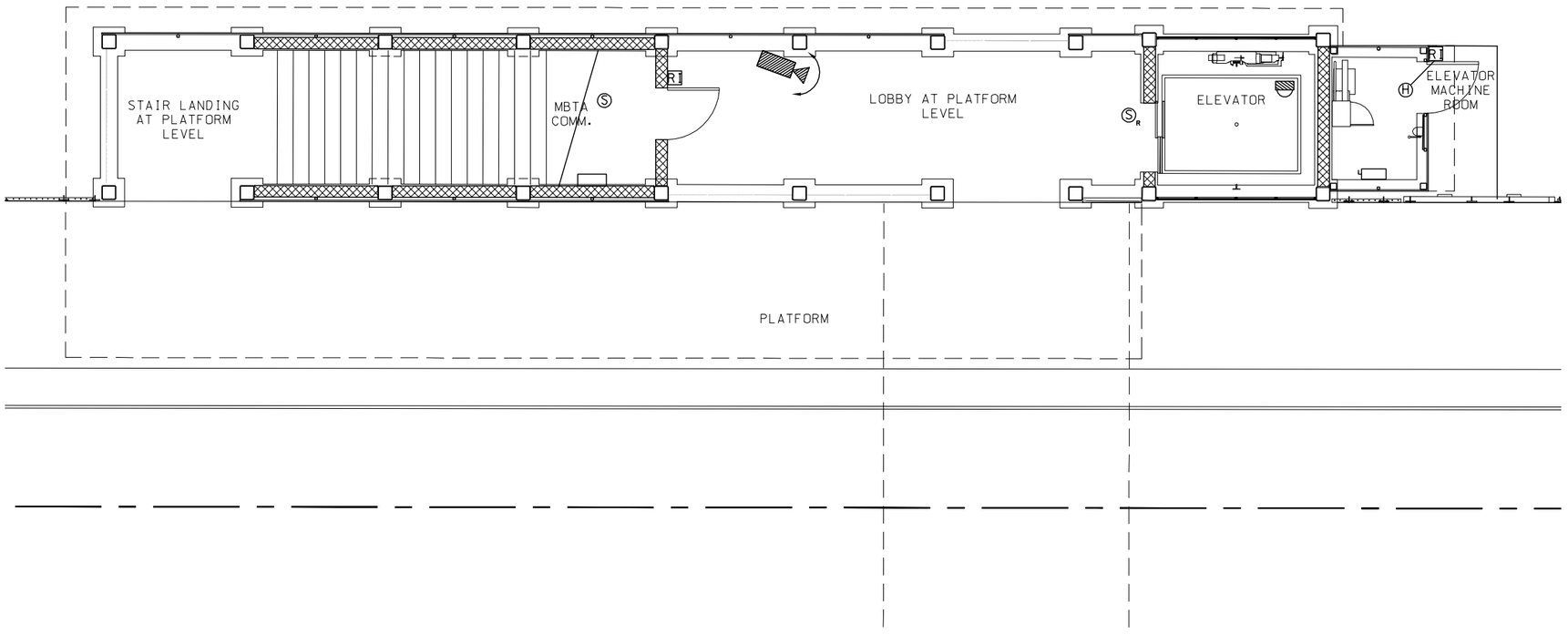

LEGEND:

MANUAL PT DOME CAMERA (IP)

PTZ CAMERA (IP)

PLAN

0 2 4 8

SCALE: 1/4" = 1'-0"

90% SUBMITTAL
NOT FOR CONSTRUCTION

ISSUE	DATE	DESCRIPTION	BY	CHKD.	APP.

JACOBS
343 CONGRESS STREET
BOSTON, MA 02110
(617) 242-9222

MASSACHUSETTS BAY TRANSPORTATION AUTHORITY

FITCHBURG COMMUTER RAIL LINE
IMPROVEMENT PROJECT
CONTRACT NO. G67CN01

SOUTH ACTON STATION
FIRST FLOOR – INBOUND HEAD HOUSE CCTV PLAN

HNTB
300 APOLLO DRIVE
CHELMSFORD, MA 01824
(978) 905-4000

PROJECT MANAGER Date

MASSACHUSETTS BAY TRANSPORTATION AUTHORITY

APPROVED BY:

PROJECT MANAGER Date

HORIZ: AS SHOWN	DES. BY	DR. BY	CHK. BY
VERT: NONE	XXX	CWB	XXX
DATE: 9/8/11			

PLAN NO.

SHEET COM-08

ISSUE

FILE NAME: P:\MBTA\2008\E2X17800\CAD\700CADD\702STATIONS\South Acton\Communications\ COM-08.dwg
PLOT DATE: Aug 17, 2011 - 11:38am