WEDECO
a xylem brand

EFFIZON Ozone Generator Series GSO

Operating Instructions

WEDECO

14125 South Bridge Circle
Charlotte, NC 28273

WEDECO

3 Technical Data

3.1 Description of the System

Ozone generators are systems for the generation of ozone up to 13 %wt. The feed gas is either air or oxygen. Main components are the water cooled ozone generator and the electric power supply unit.

3.2 System Identification

These operating instructions are part of the WEDECO ozone generator series GSO. There is a machine plate on the GSO series ozone generators. An exemplar is shown here for the system type GSO 30

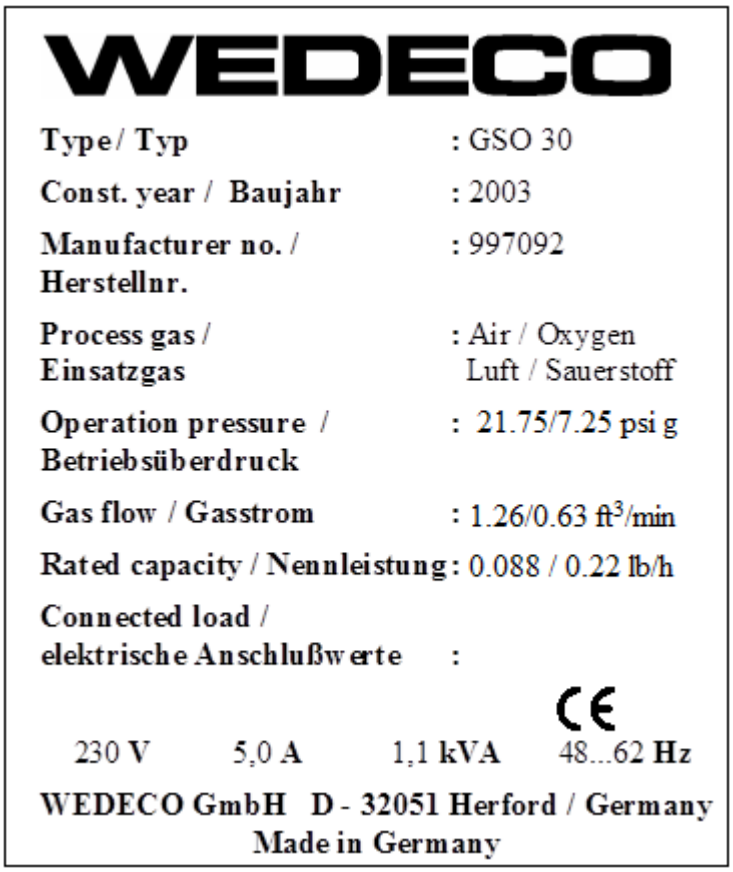
WEDECO

Type / Typ	: GSO 30
Const. year / Baujahr	: 2003
Manufacturer no. / Herstellnr.	: 997092
Process gas / Einsatzgas	: Air / Oxygen Luft / Sauerstoff
Operation pressure / Betriebsüberdruck	: 21.75/7.25 psi g
Gas flow / Gasstrom	: 1.26/0.63 ft^3/min
Rated capacity / Nennleistung	: 0.088 / 0.22 lb/h
Connected load / elektrische Anschlußwerte	:

CE

230 V 5,0 A 1,1 kVA 48...62 Hz

WEDECO GmbH D - 32051 Herford / Germany
Made in Germany

Fig 3-1: Machine plate

A machine plate has been attached on the ozone generator of the GSO series, containing the most important data.

3.3 System Dimensions and Weight

The following tables show the system dimensions and weight of the GSO series.

Type	GSO 10	GSO 20	GSO 30	GSO 40-06	GSO 50	
Width	34			36		in
Depth	12			19		in
Height	31.5			63		in
Weight	180	190	190	410	640	lbs

Table 3-1: System dimensions and Weight

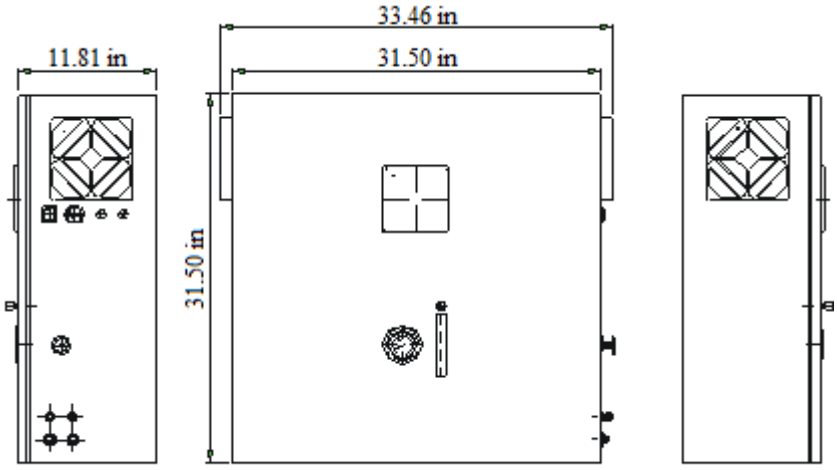

Fig 3-2: View of GSO 10 to 30

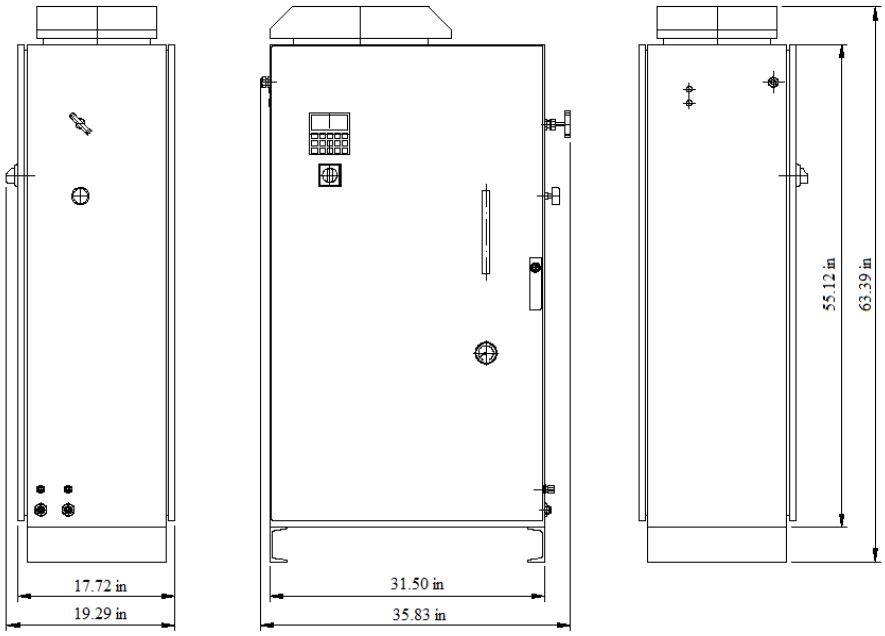

Fig 3-3: View of GSO 40-06 and 50

3.4 Nominal Capacity

Nominal capacity (with a cooling water temperature of 59°F at the input)
Feed gas: Air or oxygen

Type	GSO 10		GSO 20		GSO 30		GSO 40-06		GSO 50		
Feed gas	Air	O_2	Air	O_2	Air	O_2	Air	O_2	Air	O_2	
Nominal production	15	30	25	50	46	100	80	200	203	400	g/h
Nominal ozone concentration	≈1.5	≈7	≈2.3	≈7	≈1.7	≈7	≈1.5	≈7	≈2.0	≈7	wt %
Feed gas requirement	0.47	0.19	0.57	0.32	1.28	.64	2.53	1.26	4.93	2.53	ft^3/min (NPT)
Setting range, ozone production	15...100				10...100		10...100				%
Coolant requirement	0.050				0.11		0.22		0.44		ft^3/min
Mains voltage	230 ±10%, 1-phase						230 ±10%, 1-phase		460 ±10%, 3-phase		V_{AC}
Mains frequency	48-62						48-62				Hz
Mains power consumption	1.5		2.5		5.0		10.5		6.5		A_{AC}
Electric power consumption	0.35		0.6		1.15		2.4		4.5		KVA
Mains performance factor	0.99						0.99		0.95		cosφ

Table 3-2: Nominal capacity data

3.5 Connection to Electrical Power Supply

The power connection is ensured by a Unit plug (L1/N/PE) or a Unit plug GSO 50 (L1/L2/L3/N/PE). The series fuse must meet the local regulations and the specified performance values.
The power set point value can be set externally by using a signal from 0 to 20 mA (see electrical connection diagram).
It is possible to start the operating system by using an external voltage source (+15 ..+24V direct voltage), if this type of setting has been selected on the control terminal.
Potentially free relay contacts are available for Multi-input warning and Set point int/ext.

3.6 Ambient Conditions

Specifications of the Ambient conditions to be used at the EFFIZON®- GSO - ozone generators:

Type	GSO 10	GSO 20	GSO 30	GSO 40-06	GSO 50	
Ambient temperature for operation	41 - 95			41 - 95		°F
Ambient relative humidity for operation	< 70			< 70		% rel H.
Ambient temperature for Transport and storage	-4 - 140			-4 - 140		°F
Ambient relative humidity for Transport and storage	< 70			< 70		% rel H.
Protection type for installation	IP 32			IP 32		
Power dissipation to the environment	100	200	200	400	700	W

Table 3-3: Ambient conditions

3.7 Specification of Feed Gas and Cooling Water

Specifications of the gases to be used in the EFFIZON®- GSO - ozone generators:

	Oxygen from liquid tanks	Oxygen from air separation plants	Air	
Oxygen concentration	99.5...99.9	85...95 (93 standard)	21	Vol%
Water content	<4	<4	<4	ppm
Atmospheric dew point	<-94	<-94	<-94	°F
Content of hydrocarbons	<20	<20	<20	ppm
Nitrogen content	>1000 after consultation	>1000 after consultation		ppm
Solids content	particle free (filter 0.1µm)	particle free (filter 0.1µm)	particle free (filter 0.1µm)	

Table 3-4: Requirements placed on the feed gas

Specifications of the coolants to be used in the EFFIZON®- GSO - ozone generators

Drinking water can be used as coolant. When other fluids are used, at least the following values must be observed:

No rust or iron particles
No indissoluble or corrosive components

Iron	<	0.3	mg/l
Manganese	<	0.05	mg/l
Chloride	<	100	mg/l

3.8 Operating Data of the Ozone Generator

Feed gas: Air and oxygen

Type		GSO 10		GSO 20		GSO 30		GSO 40-06		GSO 50	
Feed gas		Air	O_2	Air	O_2	Air	O_2	Air	O_2	Air	O_2
Inlet pressure	psi g	36 – 72						36 – 72			
Outlet pressure	psi g	21.5	7.25	21.5	7.25	21.5	7.25	21.5	7.25	21.5	7.25
Temperature	°F	41 - 95						41 – 95			
Gas flow range	SCFM	0.051 -0.57	0.038 -0.41	0.051 -0.57	0.038 -0.41	0.19 -1.33	0.13 -0.95	0.25 -3.10	0.22 -2.21	0.63 -4.93	0.28 -3.60
Ozone concentration range	wt %	Air: up to 4.5 O_2 up to 13						Air: up to 4.5 O_2: up to 13			
cooling water pressure max	psi g	72.5						72.5			
Cooling water pressure min	psi g	29						29			

Table 3-5: Operating parameters, feed gas

3.9 P&I Diagram

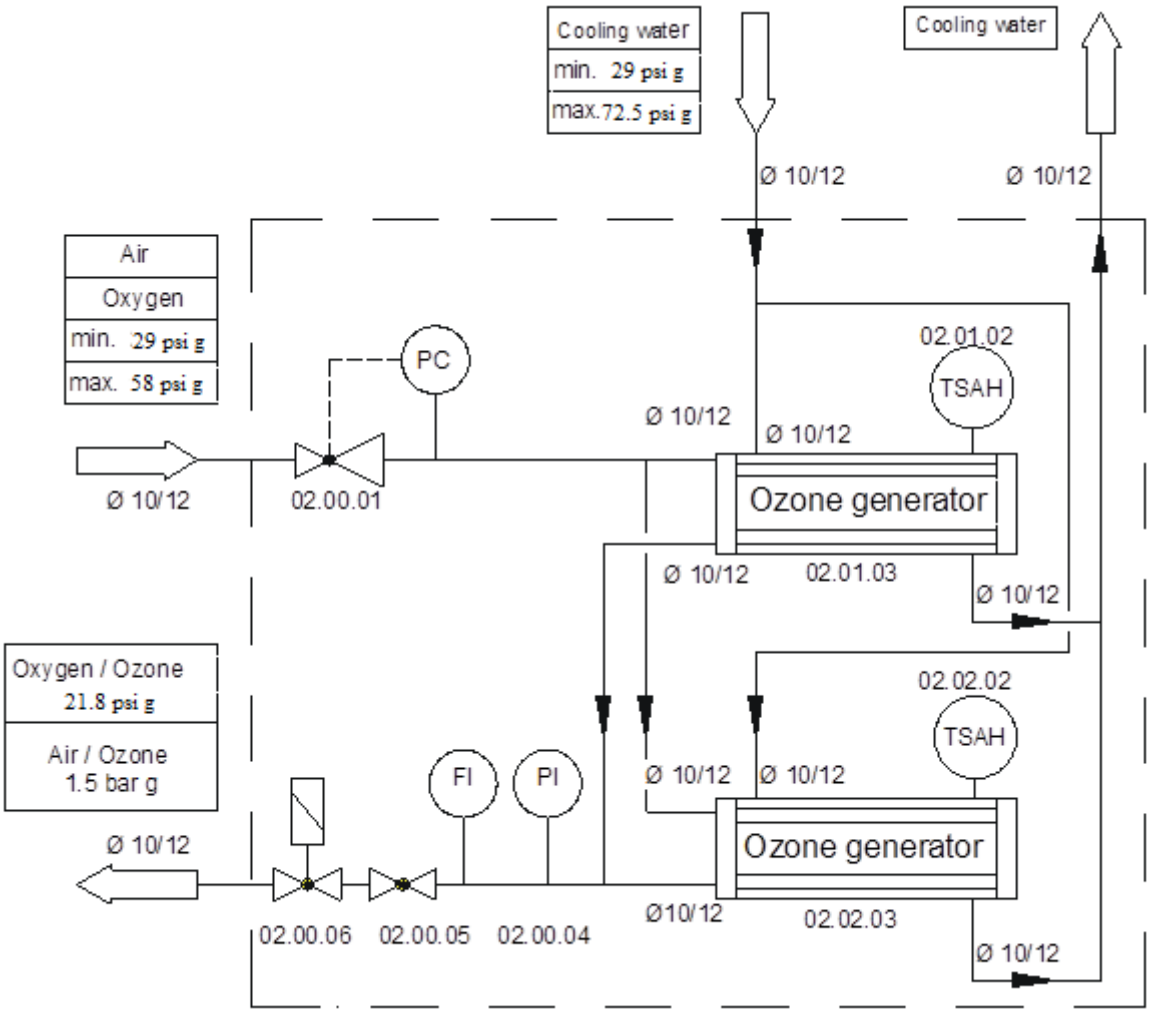

----------WEDECO scope of delivery ends here

Fig 3-4: P&I Diagram

4 Description and Function of the System

4.1 System Function

This section gives you an overview of the system's operation and components.

4.2 System Components

Ozone generator with ozone generating elements
The ozone generator is designed as a water-cooled tubular heat exchanger, to allow the effective elimination of heat resulting from the production of ozone.
The pipes in the ozone generator serve as gas discharge pipes, in which the ozone generation takes place in accordance with the "silent electrical discharge" principle. Electrodes are arranged in the gas discharge pipes which are separated from the pipes by a glass dielectric. A middle frequency high voltage, adjustable in order to adapt to the ozone production desired, is applied to these electrodes.
Energy supply
The converter is part of the energy supply of an ozone system. Its task is to adapt the ozone production to the respective requirements through variable adjustment of the electrical output voltage. The converter supplies a single phase, middle frequency output voltage, which is transformed by the high voltage transformer to the high voltage of approx. max 8 kV required for ozone production.
Fittings
The fittings and monitoring instruments, included in the delivery scope as standard, allow safe handling of the ozone system and protect it against damage or destruction.

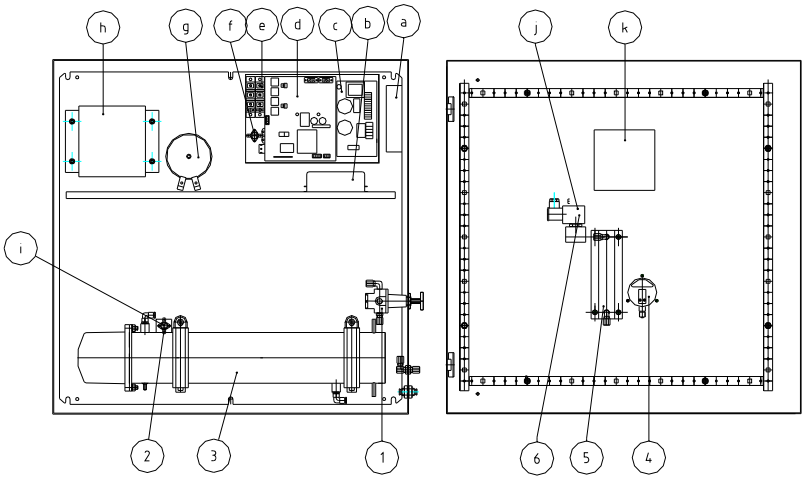

Fig 4-1: Inside view of the system GSO 10 to GSO 20

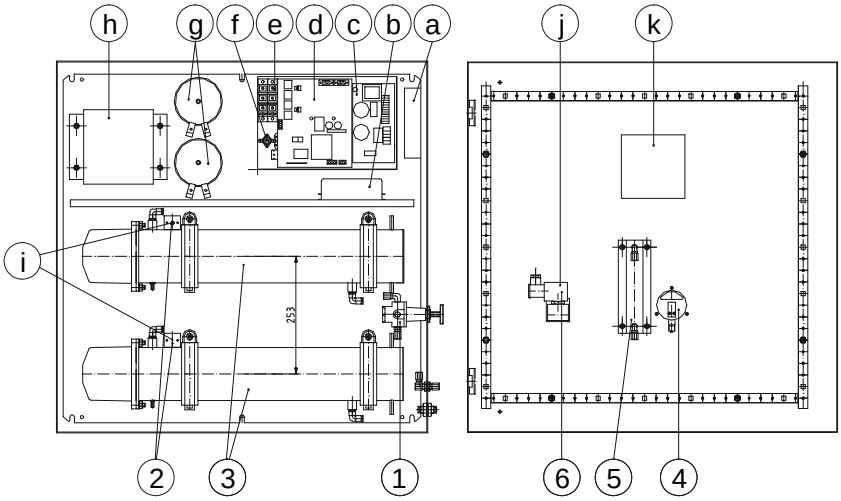

Fig 4-2: Inside view of the system GSO 30

Legend, mechanical

Pos. No.:	RI-No.:	Designation
1	02.00.01	Pressure reducer
2	02.00.02	Temperature monitor
3	02.00.03	Ozone generator
4	02.00.04	Pressure gauge
5	02.00.05	Flow meter with needle valve
6	02.00.06	Solenoid valve

Legend, electrical

Pos.:	Designation
a.	Axial fan
b.	Net filter
c.	Module converter A
d.	Module converter B
e.	Module converter C
f.	Module converter D
g.	Intermediate circuit throttle
h.	High voltage transformer with temperature switch
i.	Temperature switch
j.	Solenoid valve
k.	Module display

Table 4-1: System legend mechanical/electrical GSO 10 to GSO 30

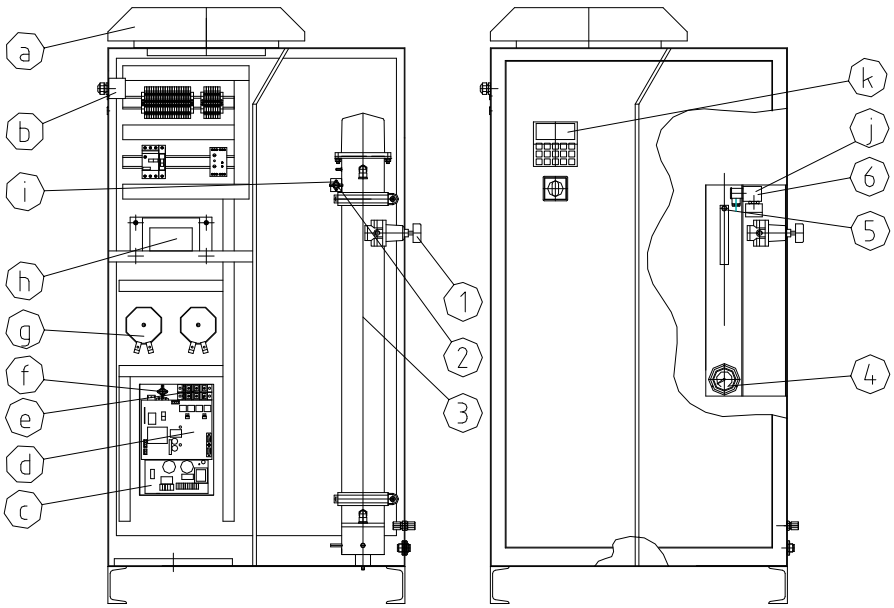

Fig 4-3: Inside view of the system GSO 40-06

Legend, mechanical

Pos. No.:	RI-No.:	Designation
1	02.00.01	Pressure reducer
2	02.00.02	Temperature monitor
3	02.00.03	Ozone generator
4	02.00.04	Pressure gauge
5	02.00.05	Flow meter with needle valve
6	02.00.06	Solenoid valve

Legend, electrical

Pos.:	Designation	Pos.:	Designation
a.	Axial fan	g.	Intermediate circuit throttle
b.	Net filter	h.	High voltage transformer with temperature switch
c.	Module converter A	i.	Temperature switch
d.	Module converter B	j.	Solenoid valve
e.	Module converter C	k.	Module display
f.	Module converter D		

Table 4-2: System legend mechanical/electrical GSO 40-06

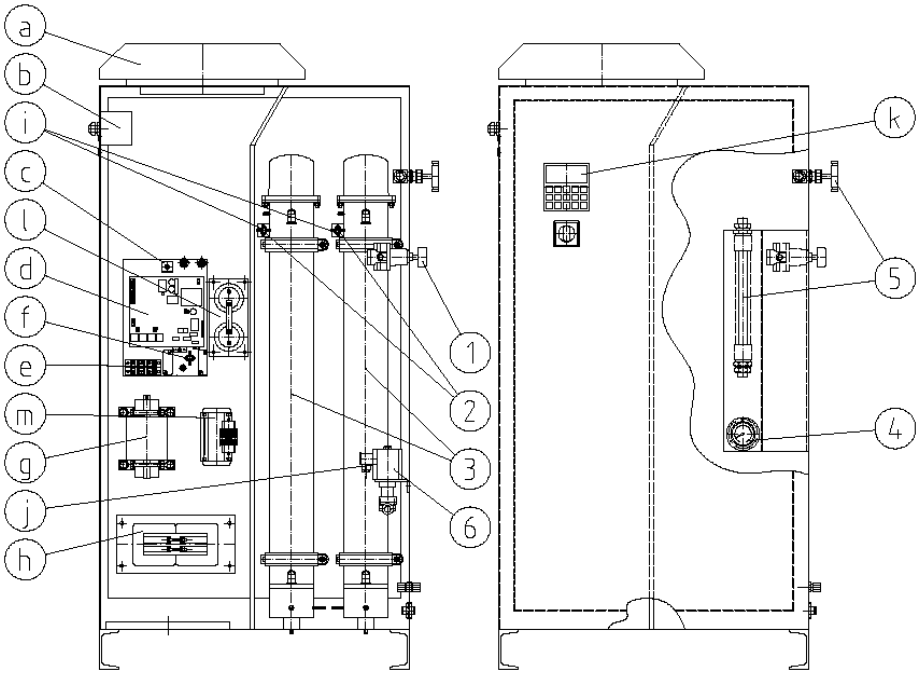

Fig 4-4: Inside view of the system GSO 50

Legend, mechanical

Pos. No.:	RI-No.:	Designation
1	02.00.01	Pressure reducer
2	02.00.02	Temperature monitor
3	02.00.03	Ozone generator
4	02.00.04	Pressure gauge
5	02.00.05	Flow meter with needle valve
6	02.00.06	Solenoid valve

Legend, electrical

Pos.:	Designation	Pos.:	Designation
a.	Axial fan	g.	Intermediate circuit throttle
b.	Net filter	h.	High voltage transformer with temperature switch
c.	Module converter A	i.	Temperature switch
d.	Module converter B	j.	Solenoid valve
e.	Module converter C	k.	Module display
f.	Module converter D	l.	DC capacitors
		m.	Net choke

Table 4-3: System legend mechanical/electrical GSO 50

4.3 Overall View

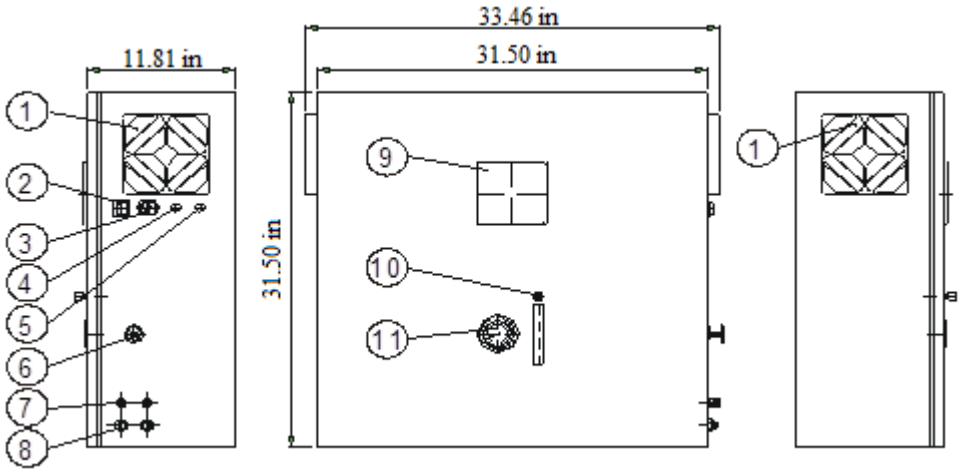

Fig 4-5: Overall view of the system GSO 10 to 30

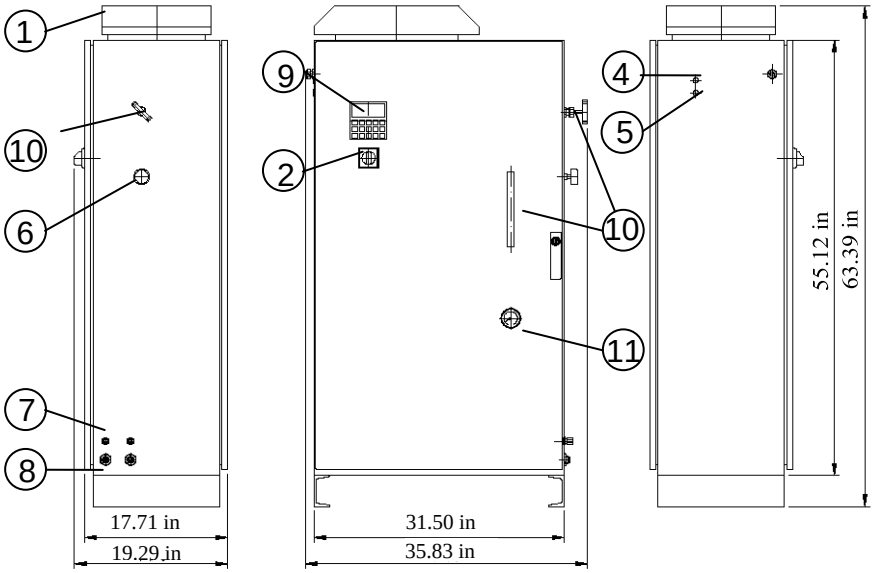

Fig 4-6: Overall view of the system GSO 40-06 to 50

Legend:

1. Input / output of ventilator
2. Power switch
3. Power supply socket
4. Ext. set point value (X11)
5. Ext. interface (X12)
6. Pressure reducer
7. Inlet feed gas /outlet process gas
8. Inlet/outlet cooling water
9. Display (operation panel)
10. Flow meter with needle valve
11. Pressure gauge

Table 4-4: System legend Overall view GSO 10 to GSO 50

4.4 Ozone Generation

Ozone generation principle

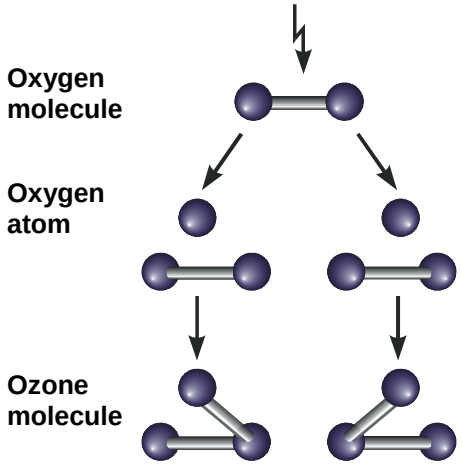

Fig 4-7: Ozone generation principle

Next to fluorine, ozone is the strongest oxidizing agent, and when correctly applied, able to contribute enormously to improve the condition of our life and environment. When compared to other oxidizing agents, the advantage of ozone is that, aside from the reaction products, only oxygen develops - no toxic residue must be disposed. Ozone has been known for more than 100 years, and has proven itself as an environmentally friendly oxidizing agent in many areas of application.
Ozone is produced technically through silent electrical discharge from oxygenous feed gases, typically air or oxygen, by special ozone generators.

Schematic presentation of the discharge in an ozone generator

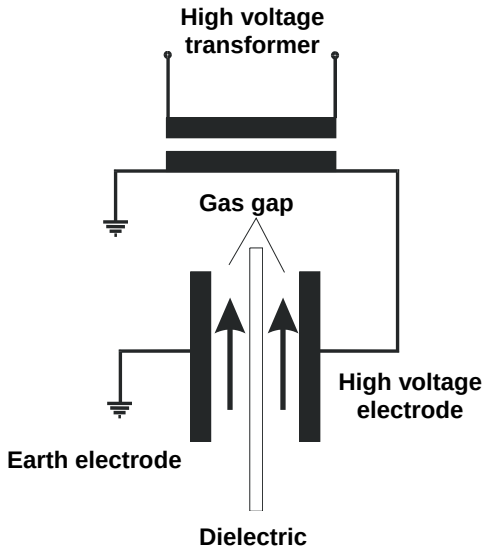

During the ozone synthesis process at first oxygen molecules are split through the supply of energy. The resulting oxygen atoms react with oxygen molecules to form ozone, whereby heat is released which has to be dissipated by cooling
Ozone formation takes place between two electrodes, which are isolated from each other by a dielectric made of glass or ceramic and by a small gap. A high voltage, middle frequency, unilaterally grounded alternating current is applied to the electrodes. The oxygenous gas flows through the gap, resulting in ozone generation in the electrical field.

Fig 4-8: Ozone generator principle

11.2 Certificate in Accordance with the EMC Directive

PHŒNIX TEST-LAB

Bescheinigung
einer zuständigen Stelle

**im Sinne des § 4 Abs. 2 EMVG bzw.
des Artikels 10 Abs. 2 der EMV-Richtlinie 89/336/EWG**

Zertifikat-Nr.: Z990404

Hiermit wird bescheinigt, daß das nachfolgend genannte Produkt den grundlegenden Schutzanforderungen der Richtlinie des Rates vom 03. Mai 1989 zur Angleichung der Rechtsvorschriften über die elektromagnetische Verträglichkeit (89/336/EWG) entspricht.

Inhaber der Bescheinigung:	WEDECO Umwelttechnologie, Postfach 5114, 32051 Herford
Hersteller:	siehe Inhaber
Technischer Bericht, Datum:	990404 vom 29.04.1999
Produktbezeichnung:	Gerät für Ozonerzeugung aus Sauerstoff/Luft
Bestimmungsgemäße Verwendung des Produktes:	Industriebereich
Anlage(n):	1 Seite, Liste der Gerätebezeichnungen

Diese Bescheinigung bezieht sich nur auf das zur Konformitätsbewertung vorgestellte Produkt oder den technischen Bericht. Ihre Gültigkeit erstreckt sich auf den gesamten Europäischen Wirtschaftsraum.

Blomberg, 29.04.1999
Ausstellungsort, Datum

Leiter der zuständigen Stelle
Dr.-Ing. Holger Altmaier

PHOENIX TEST-LAB GmbH
Königswinkel 10

D-32825 Blomberg

akkreditiert von der Regulierungsbehörde für Telekommunikation und Post
unter der DAR-Registriernummer BPT-ZE-018/95-00

11.3 EG-Declaration of Conformity

Hersteller:
Manufacturer:

WEDECO GmbH
Boschstr. 6
D - 32051 Herford

CE

Anlagen-Typ: Construction Version:	**Bauserie - GSO**	Produktbezeichnung: Product-Name:	**Ozonanlage**
Herstellernummer: Factory-Number	**Siehe Typen-schild**	Baujahr: Year of Construktion:	**2004**

Wir erklären, dass das vorgenannte Projekt (Druckgerät) hinsichtlich seiner Konzeption, der Bauart und den Ausführungen den grundlegenden Sicherheits- und Gesundheitsanforderungen mit den nachfolgend aufgeführten Richtlinien konform ist:
We herewith confirm, that the above mentioned Project (Pressure equipment) is in accordance with the below mentioned directives of the European Community. Design, completion and applied test procedures followed the guiding rules / regulations as stated below in order to fulfill the general safety and health requirements of the EU.

Richtlinie 98/37/EG
Directive 98/37/EC

des Europäischen Parlaments und des Rates vom 22. Juni 1998 zur Angleichung der Rechts- und Verwaltungsvorschriften der Mitgliedstaaten für Maschinen.
of the European Parliament and of the Council of 22 June 1998 on the approximation of the laws of the Member States relating to machinery

Richtlinie 73/23/EWG
Directive 73/23/EEC

des Rates vom 19. Februar 1973 zur Angleichung der Rechts-vorschriften der Mitgliedstaaten betreffend elektrische Betriebsmittel zur Verwendung innerhalb bestimmter Spannungsgrenze
of 19 February 1973 on the harmonization of the laws of Member States relating to electrical equipment designed for use within certain voltage limits

Richtlinie 97/23/EG (nach Art.3, Abs. 3)
Directive 97/23/EC
(para.3, item 3)

des Europäischen Parlaments und des Rates zur Angleichung der Rechtsvorschriften der Mitgliedstaaten über Druckgeräte
of the European Parliament and of the council of 29 May 1997 on the approximation of the laws of the Member States concerning pressure equipment

Richtlinie 89/336/EWG
Directive 89/336/EEC

des Rates vom 3. Mai 1989 zur Angleichung der Rechtsvorschriften der Mitgliedstaaten über die elektromagnetische Verträglichkeit
of 3 May 1989 on the approximation of the laws of the Member States relating to electromagnetic compatibility

Harmonisierte Normen
Harmonized Standards

EN 292	**EN 1050**	**EN 61000**
EN 414	**EN 50081**	**EN 60204**
EN1043	**EN 50082**	

Nationale Normen/Spezifikationen
National Harmonized Standards

VDI 4500	**VDE 0413**	
VDE 0100	**AD 2000**	
VDE 0113	**BGV-Richtlinie**	

Herford, den

ppa.
rechtsverbindliche Unterschrift

11.4 Electrical Connection Diagram

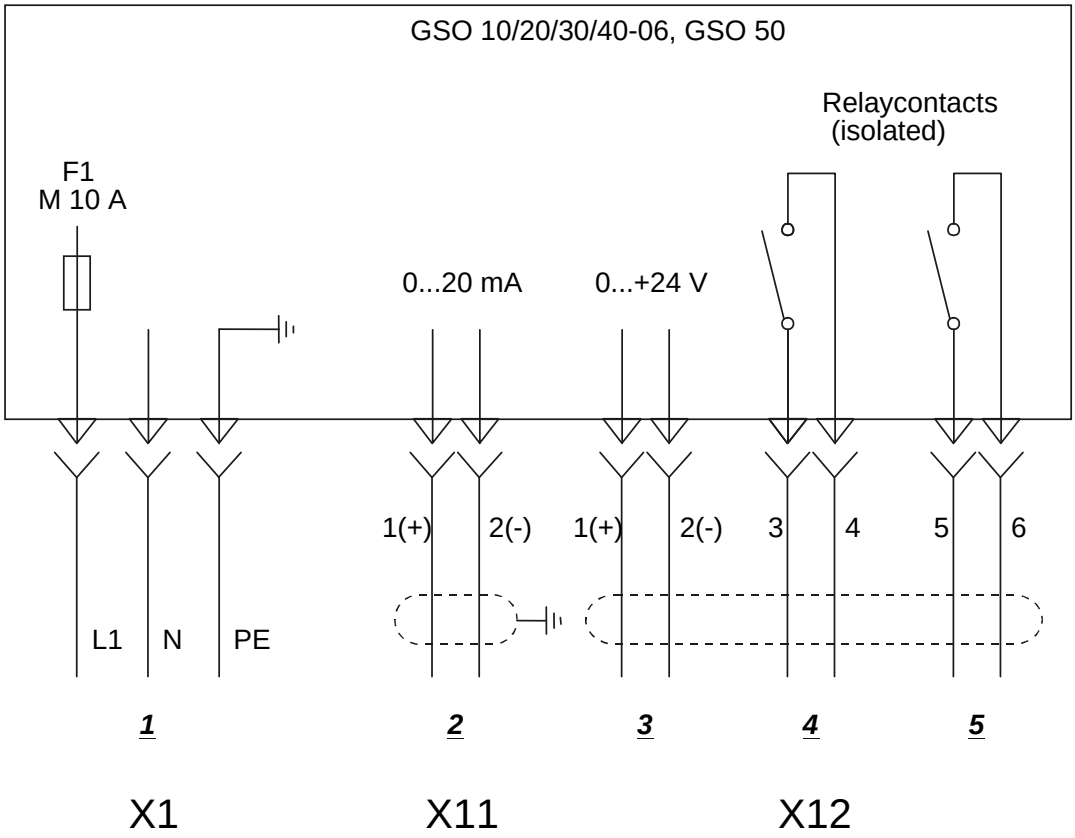

Legend:

1... Power connection (X1), different for GSO, L1/L2/L3/N/PE directly connected to netfilter
2... External set point value (X11)

External interface (X12):

3... External release
4... External set point value
(contact closed)
5... Multi-input warning
(contact closed)

11.9 Performance Curves

11.9.1 Performance Curves GSO 10 – Oxygen

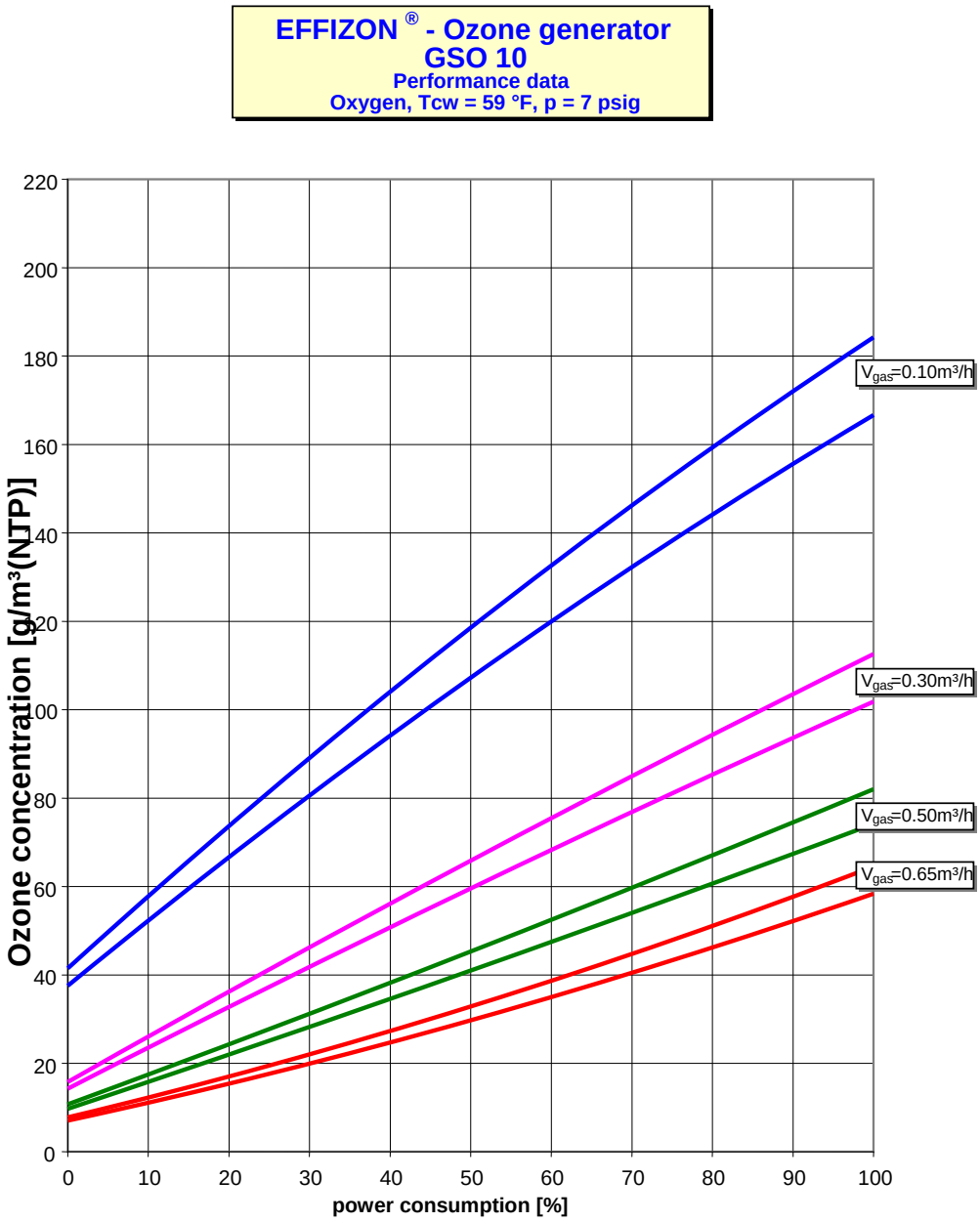

11.9.2 Performance GSO 20 – Oxygen

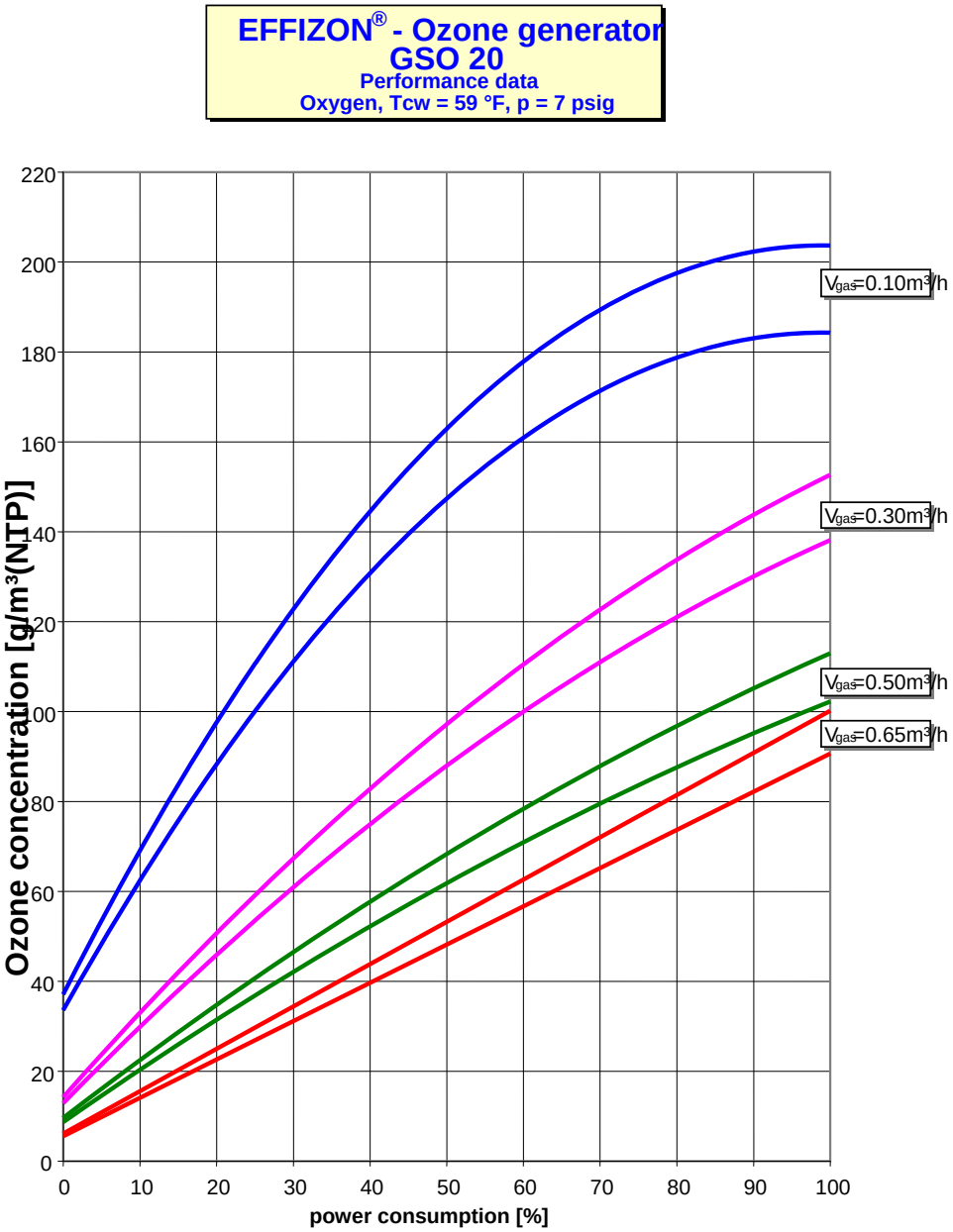

11.9.3 Performance GSO 30 - Oxygen

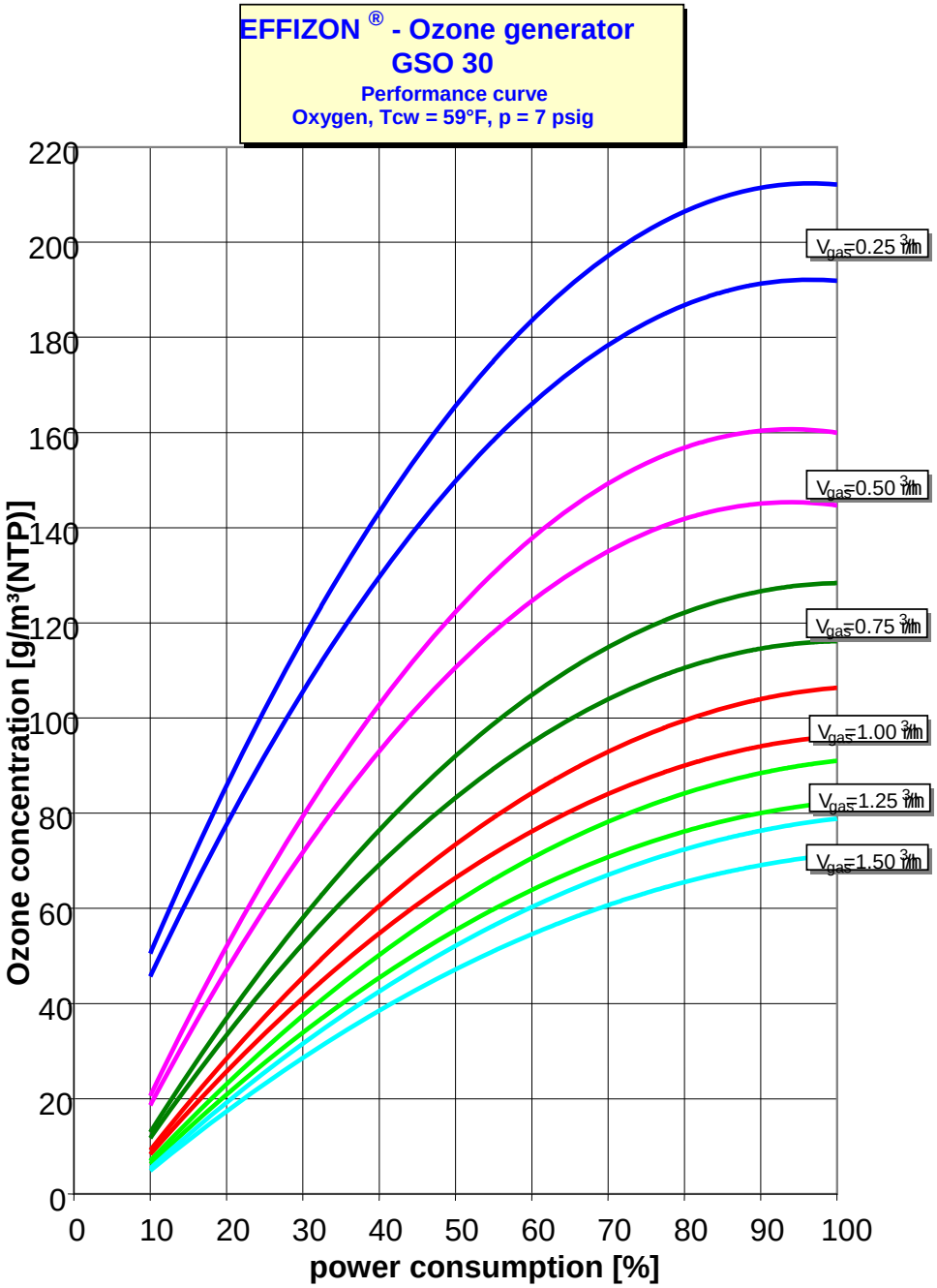

11.9.4 Performance GSO 40-06 - Oxygen

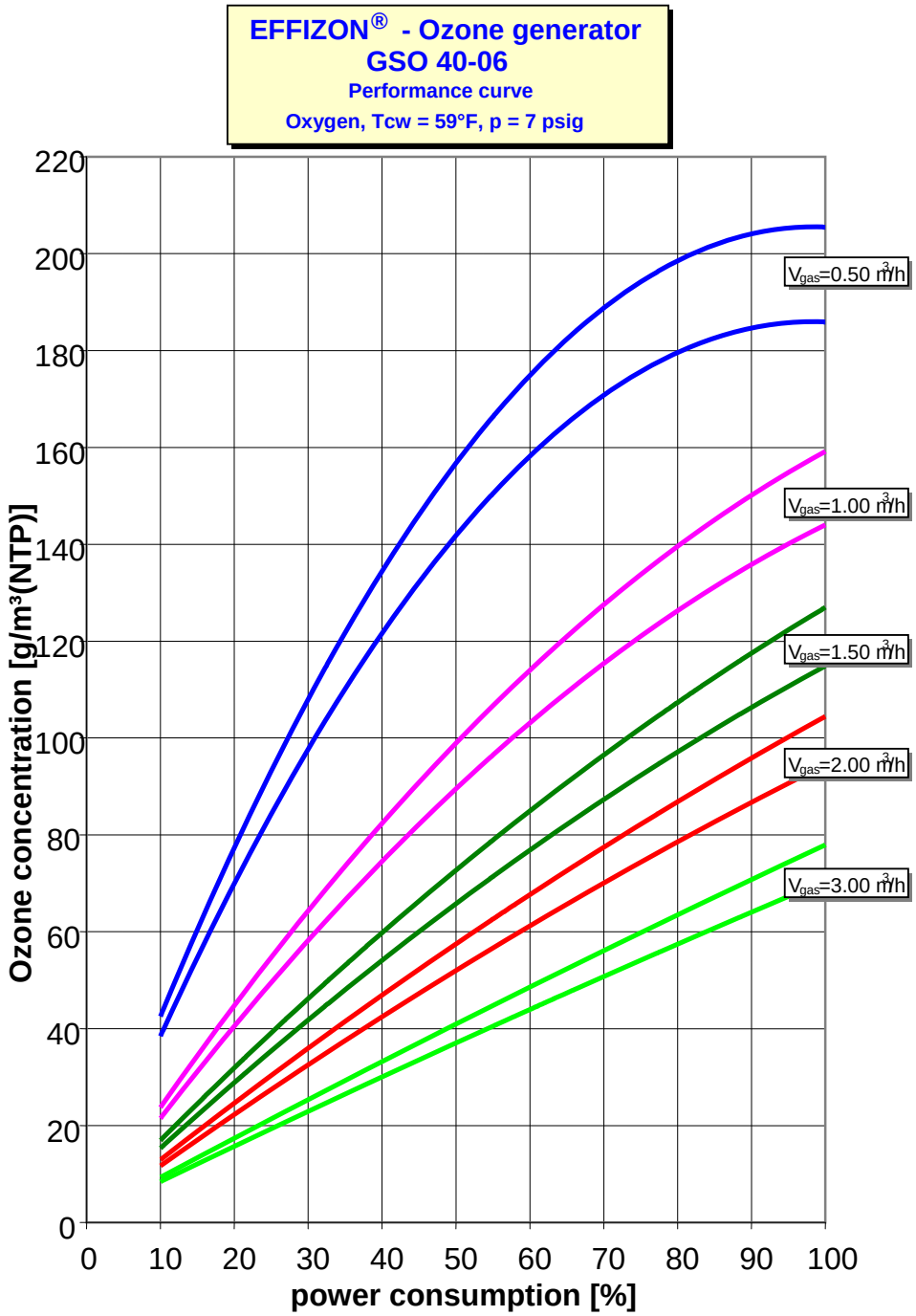

11.9.5 Performance GSO 50 - Oxygen

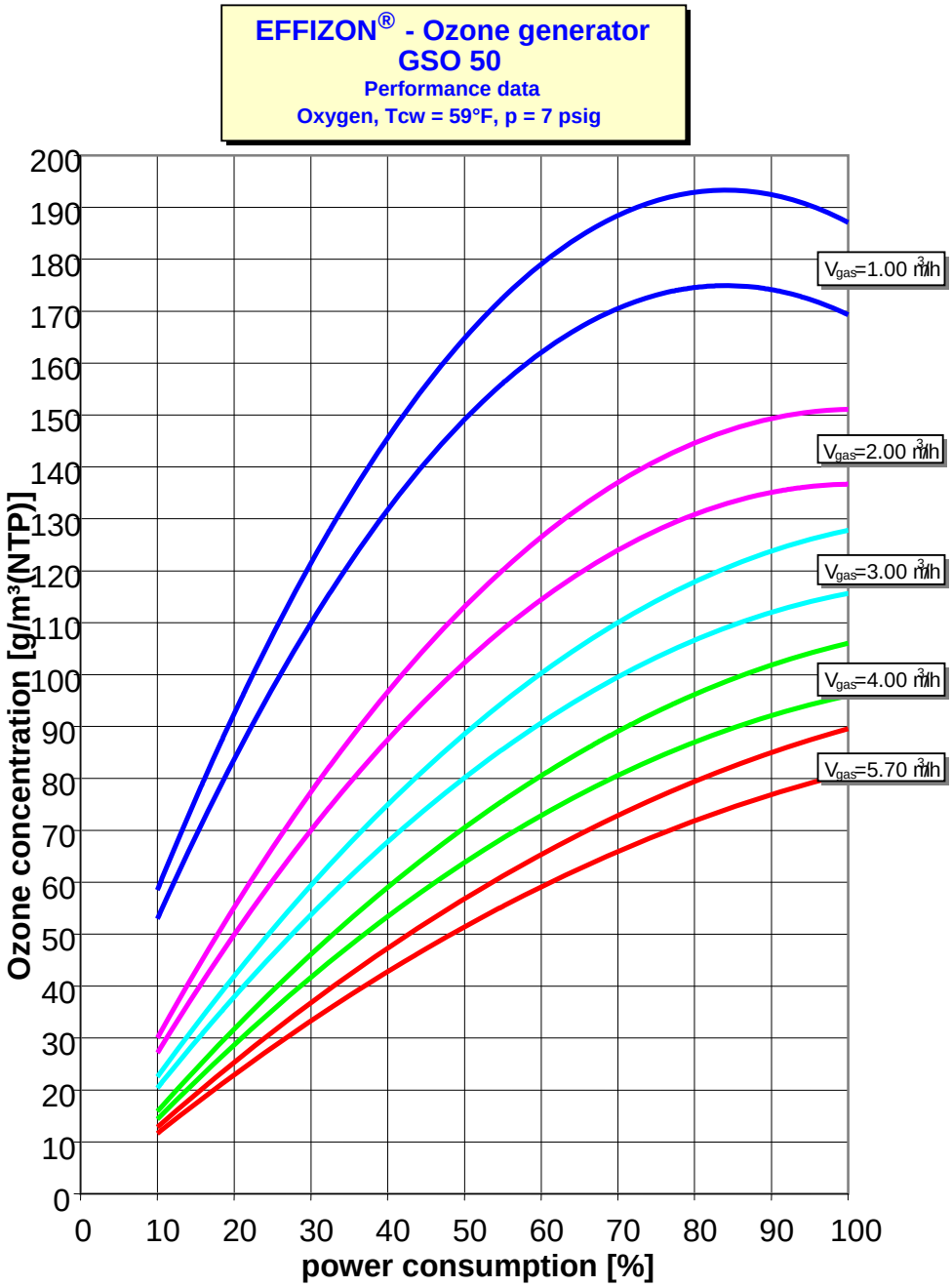

11.9.6 Performance GSO 10 – Air

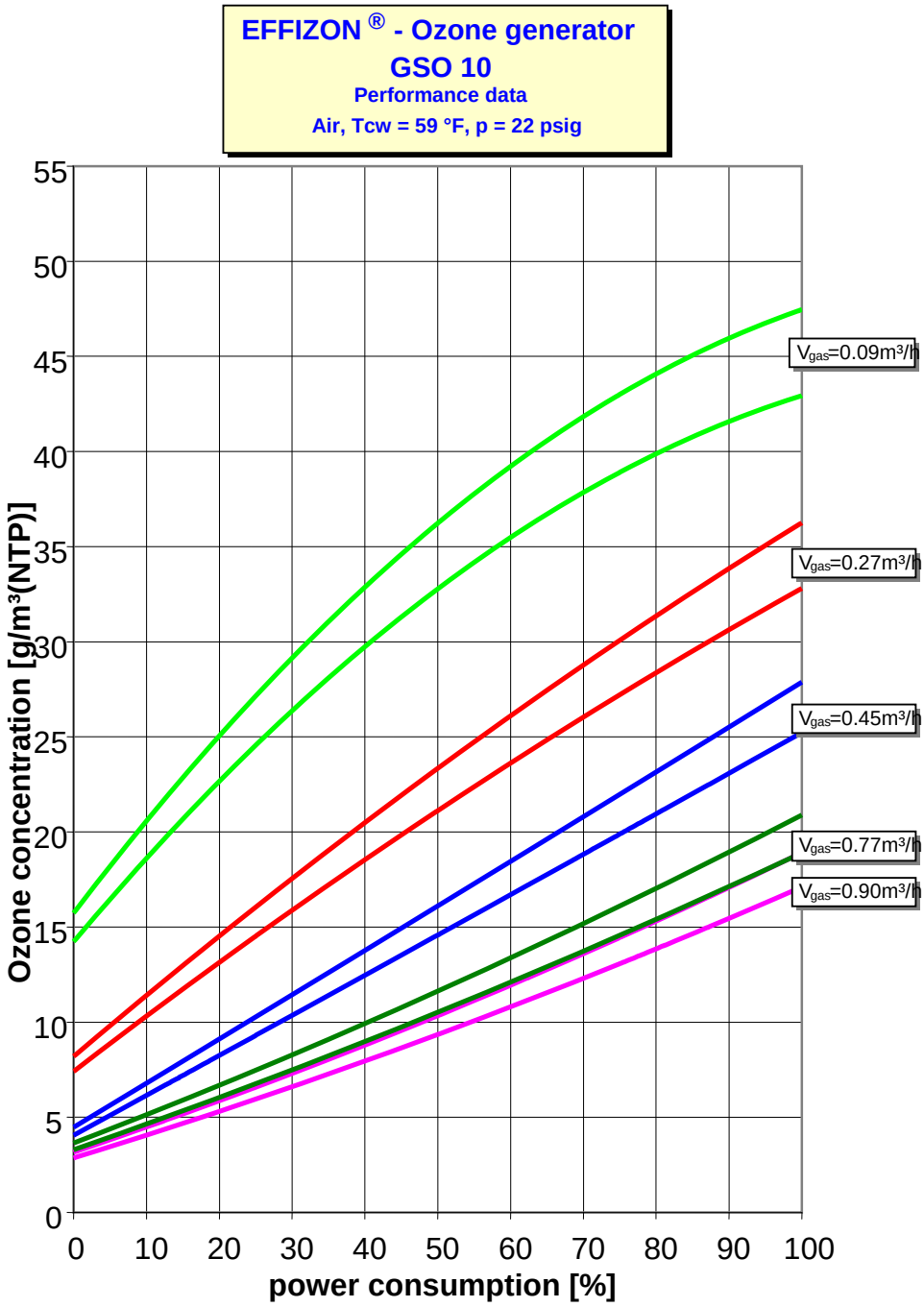

11.9.7 Performance GSO 20 – Air

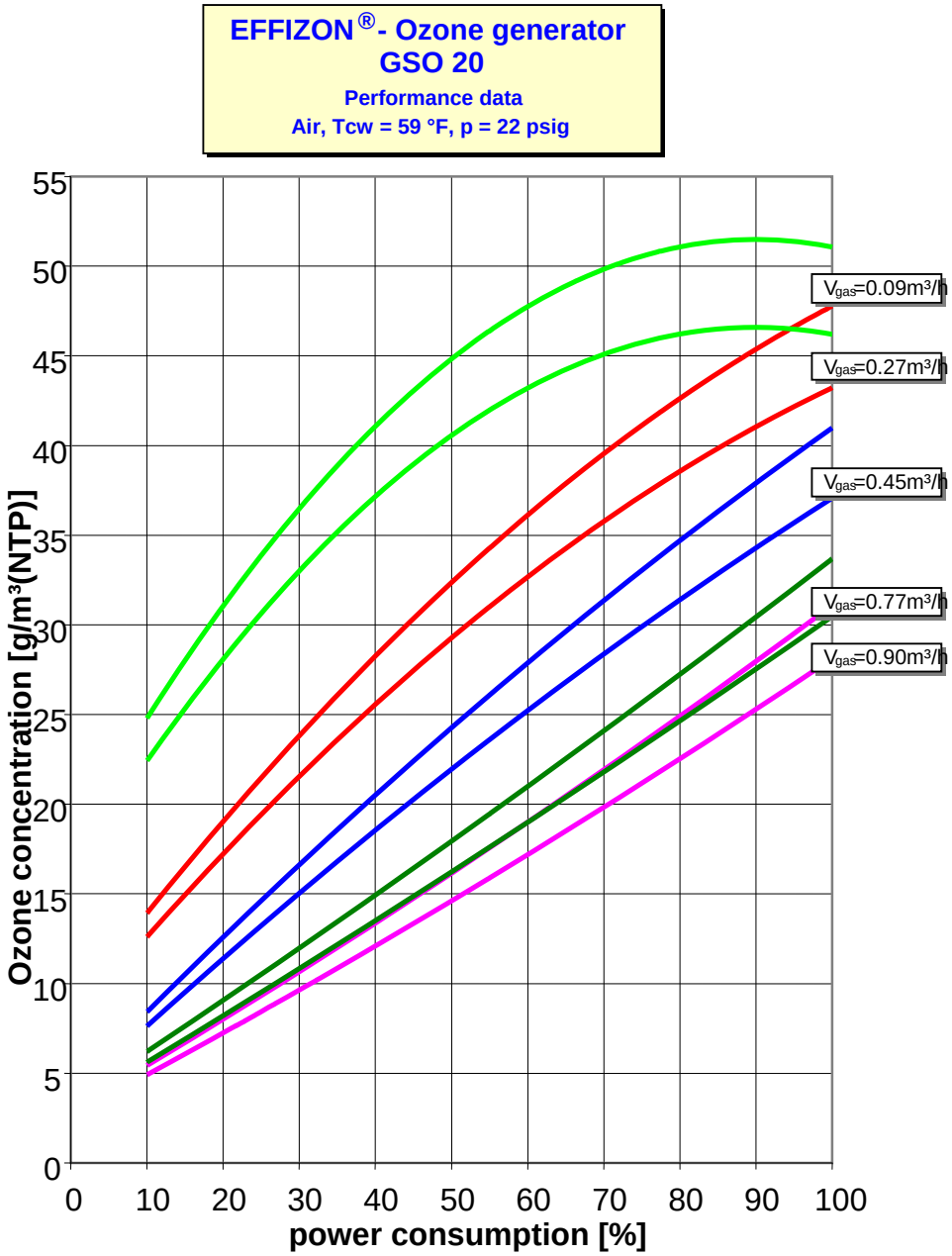

11.9.8 Performance GSO 30 - Air

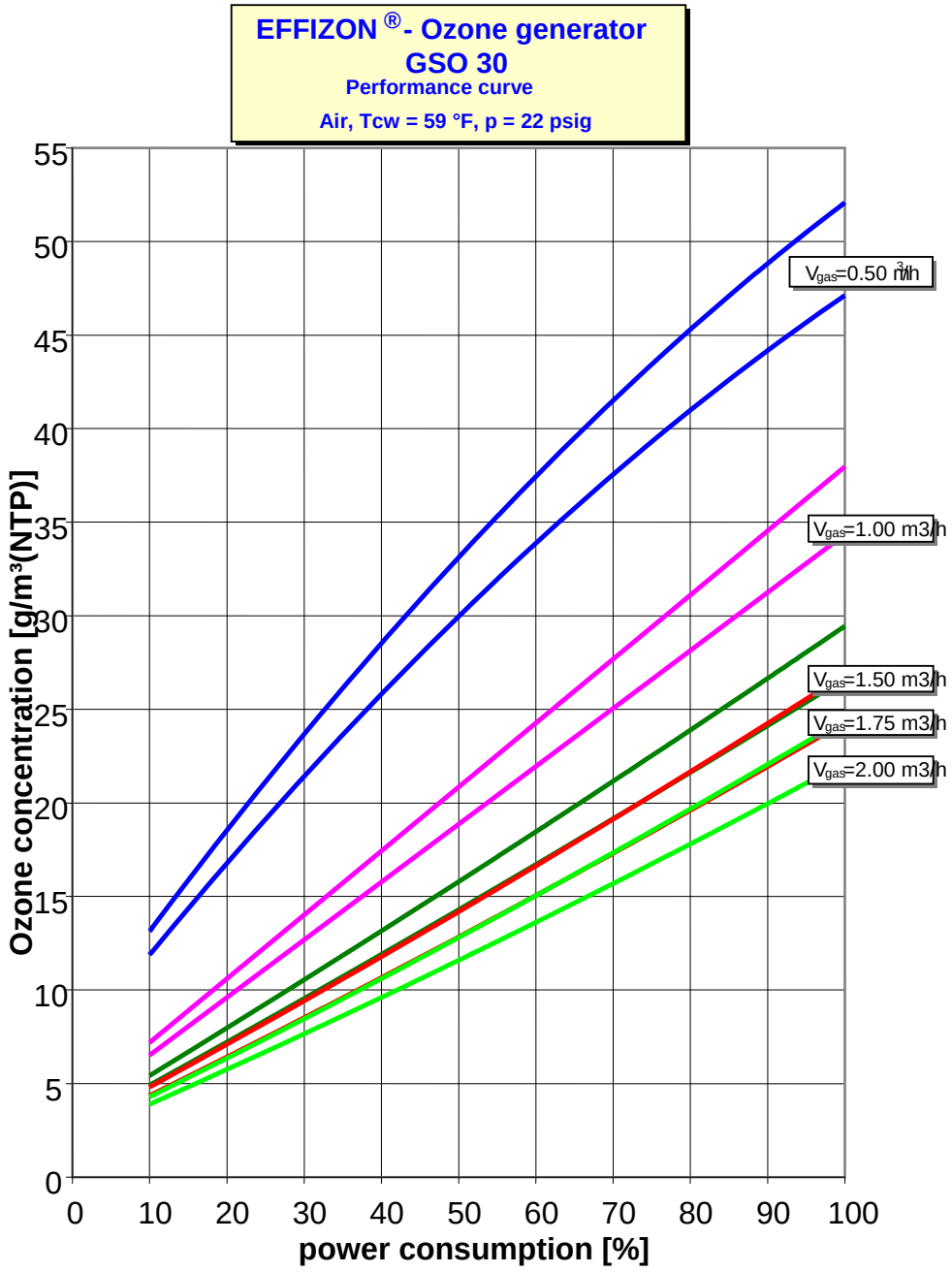

11.9.9 Performance GSO 40-06 - Air

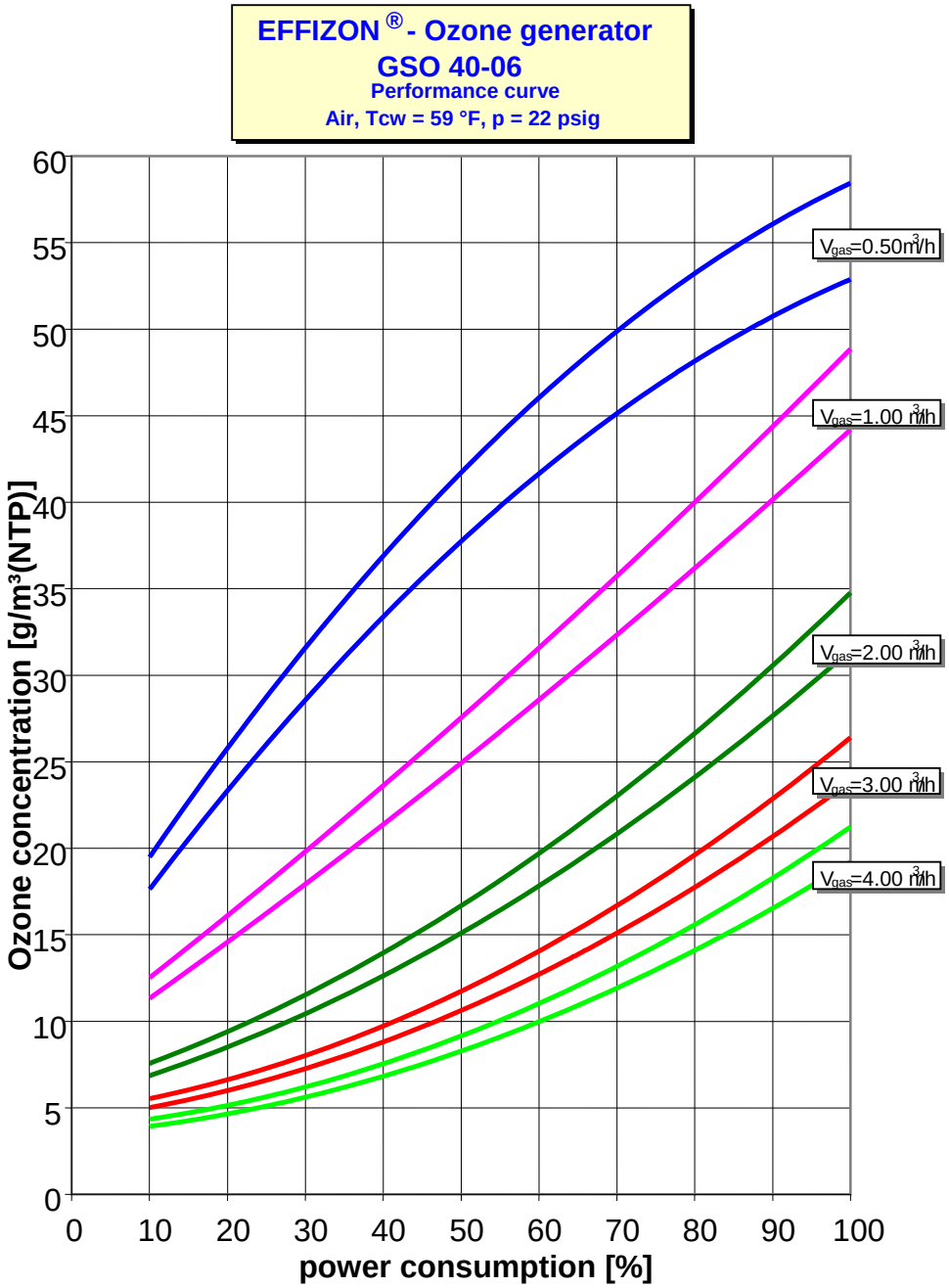

11.9.10 Performance GSO 50 – Air

EFFIZON® - Ozone generator
GSO 50
Performance data
Air, Tcw = 59 °F, p = 22 psig

11.9.11

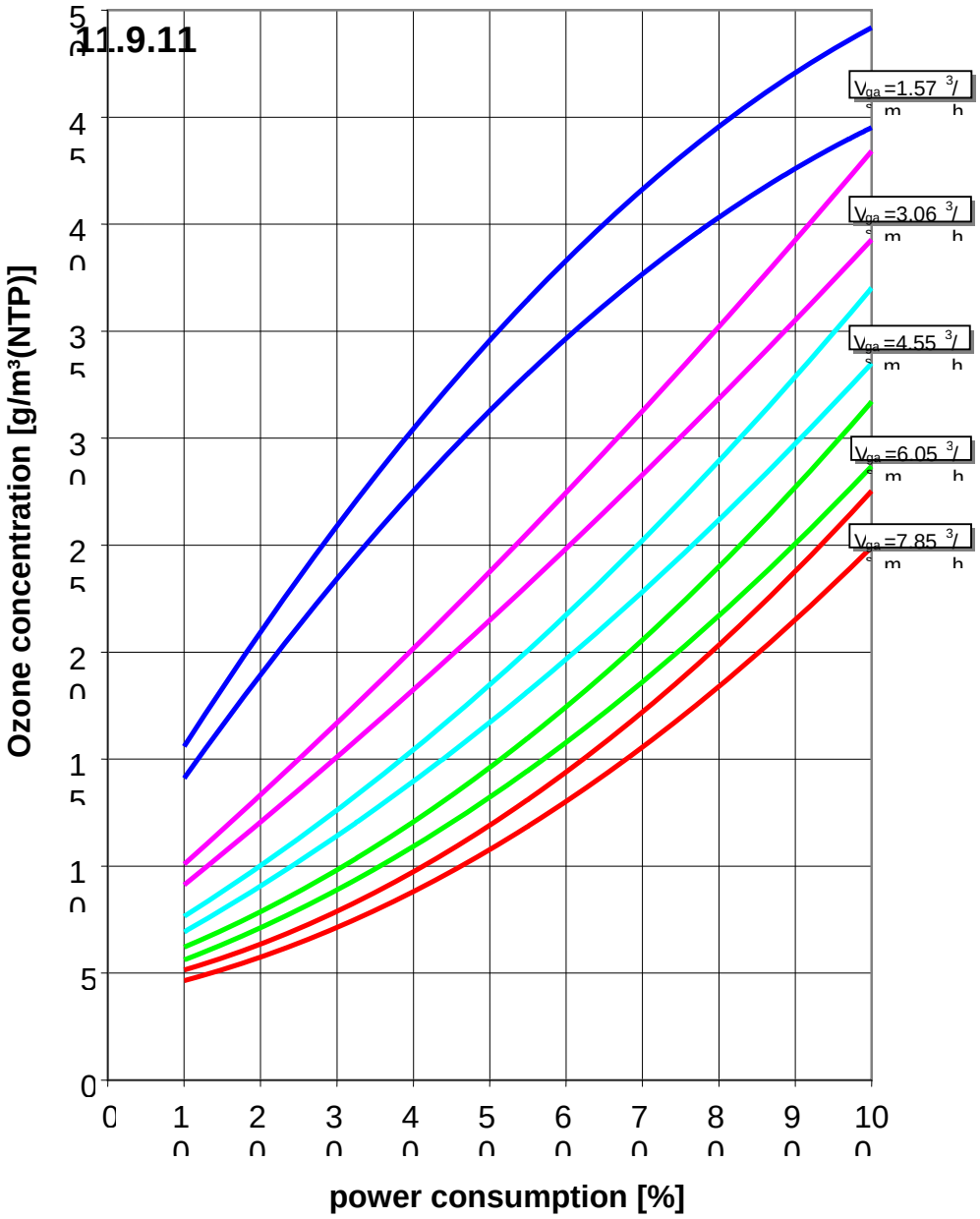

Gas Flow Meter Calibration Curve GSO 10/20

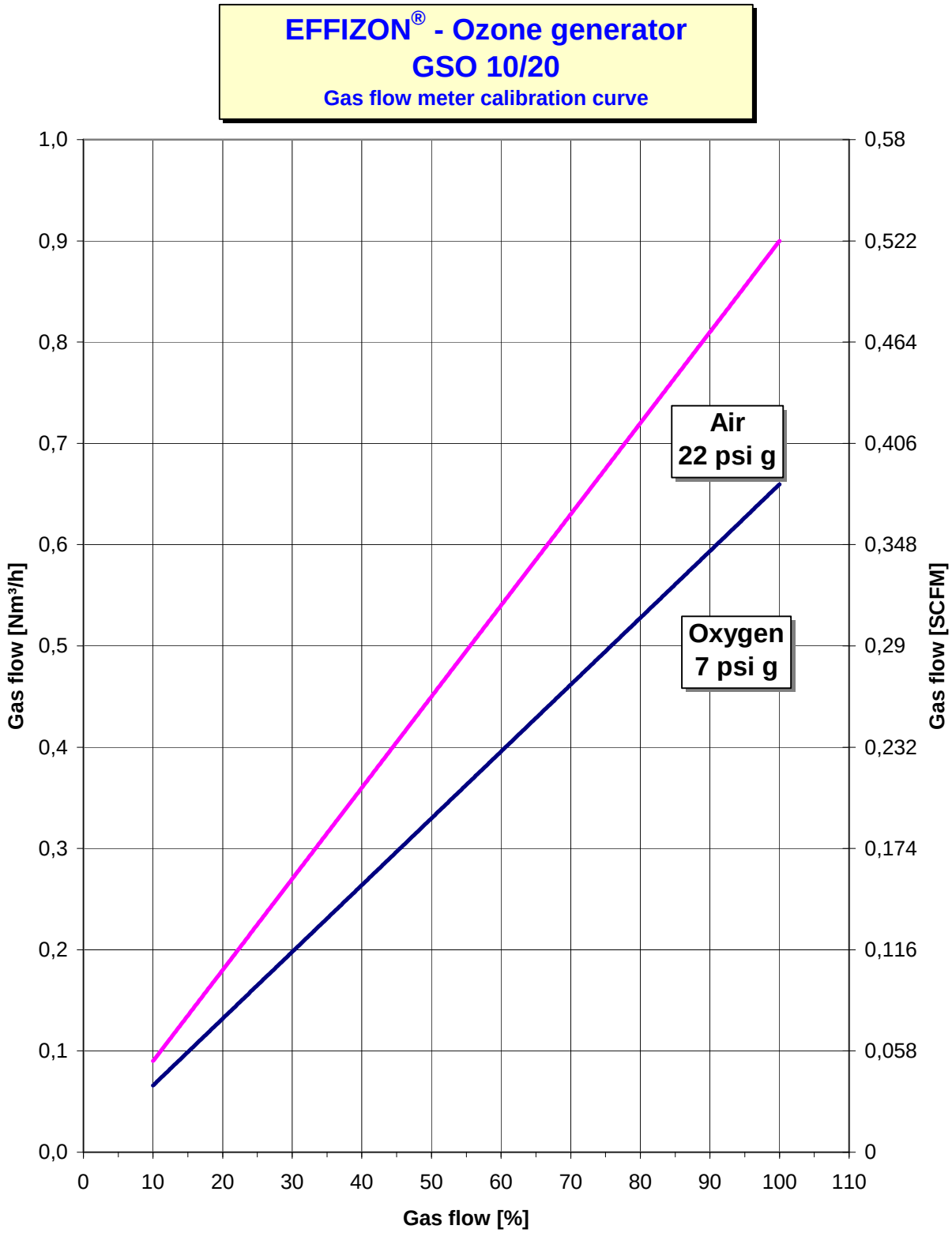

11.9.12 Gas Flow Meter Calibration Curve GSO 30

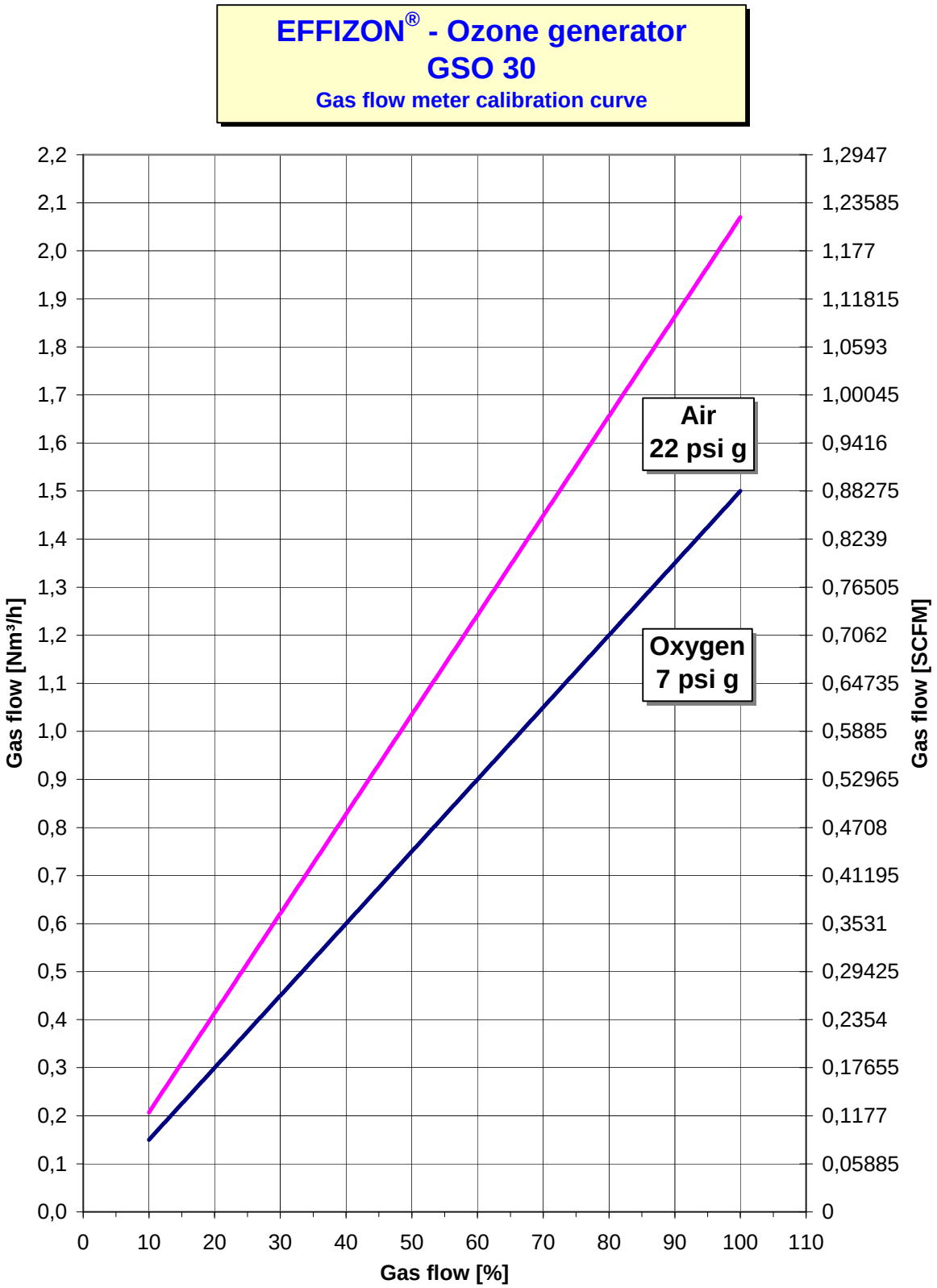

11.9.13 Gas Flow Meter Calibration Curve GSO 40-06

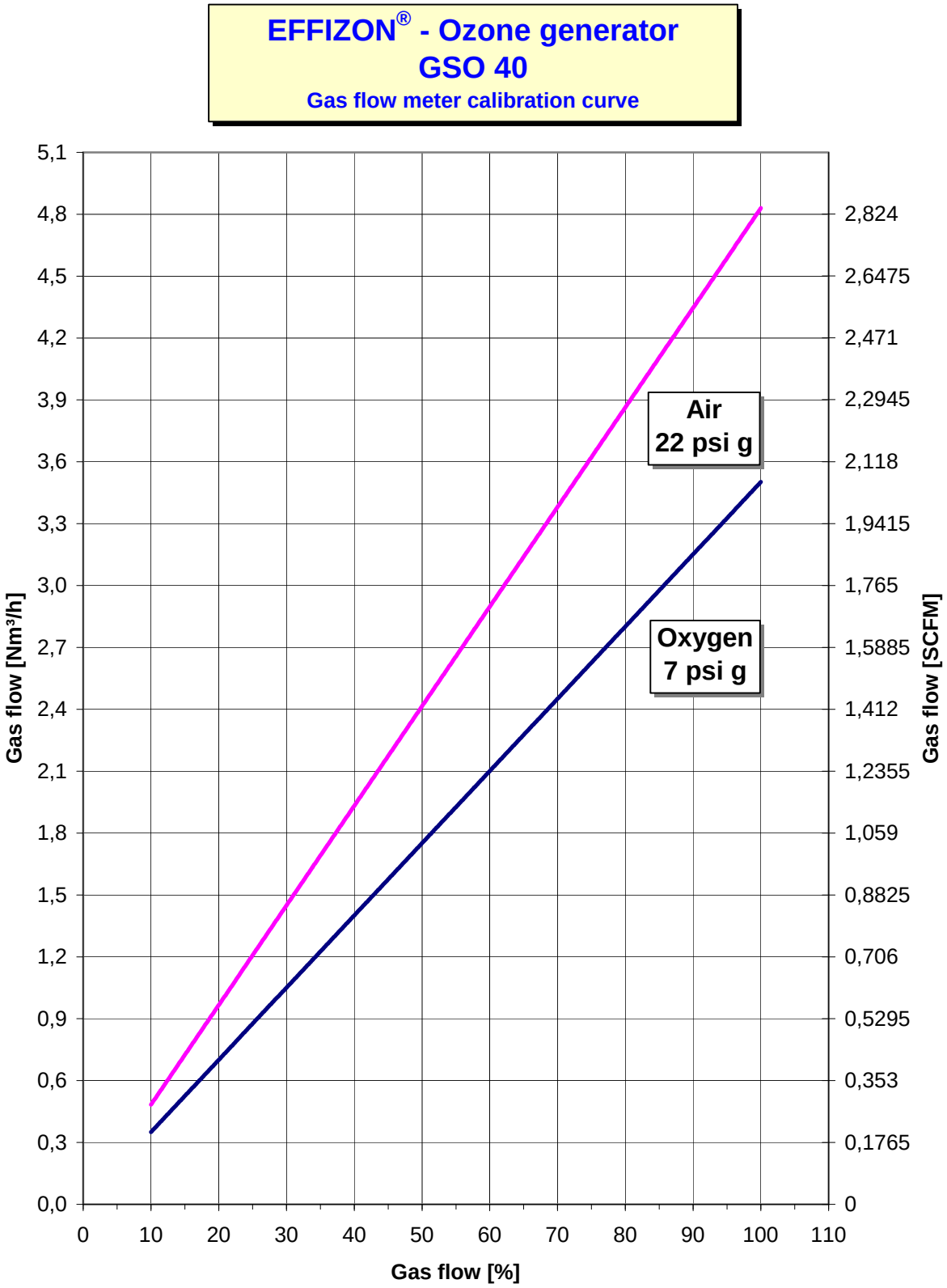

11.9.14 Gas Flow Meter Calibration Curve GSO 50

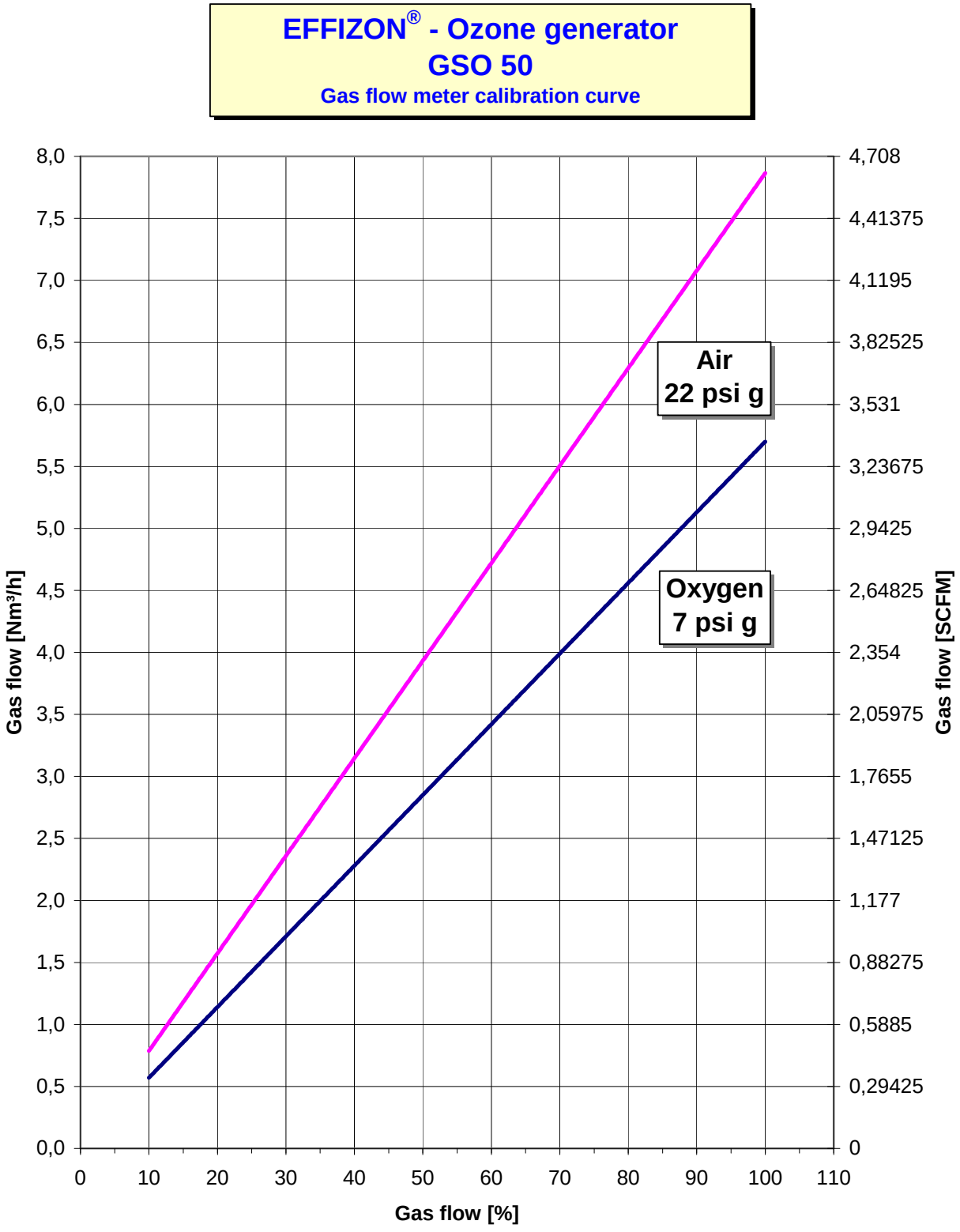

Environmental Partners GROUP

A partnership for engineering solutions

www.envpartners.com