MASSACHUSETTS DEPARTMENT OF TRANSPORTATION
HIGHWAY DIVISION

MAYNARD–ACTON
ASSABET RIVER RAIL TRAIL

STATE	FED. AID PROJ. NO.	SHEET NO.	TOTAL SHEETS
MASS.		1	22
PROJECT FILE NO. 604531			

PRELIMINARY
RIGHT OF WAY PLANS
TITLE SHEET & INDEX

PLAN AND PROFILE OF

ASSABET RIVER RAIL TRAIL

IN THE TOWNS OF

MAYNARD & ACTON

MIDDLESEX COUNTY

FEDERAL AID PROJECT NO.

THE 1988 MASSACHUSETTS HIGHWAY DEPARTMENT STANDARD SPECIFICATIONS FOR HIGHWAYS AND BRIDGES (ENGLISH EDITION), THE SUPPLEMENTAL SPECIFICATIONS (ENGLISH EDITION), DATED FEBRUARY 2010; THE STANDARD SPECIAL PROVISIONS (LATEST EDITION); THE 2010 MASSDOT CONSTRUCTION STANDARD DETAILS; THE CURRENT "MANUAL ON UNIFORM TRAFFIC CONTROL DEVICES FOR STREETS AND HIGHWAYS" WITH MASSACHUSETTS AMENDMENTS; THE 1990 STANDARD DRAWINGS FOR SIGNS AND SUPPORTS; THE 2006 STANDARD DRAWINGS AND DETAILS FOR THE DEVELOPMENT OF TRAFFIC MANAGEMENT PLANS; THE 1968 STANDARD DRAWINGS FOR TRAFFIC SIGNAL AND HIGHWAY LIGHTING; AND THE AMERICAN STANDARD FOR NURSERY STOCK (ANSI Z–60.1–2004); AND ALL AMENDMENTS WILL GOVERN.

INDEX

SHEET NO.		DESCRIPTION
1	-----	TITLE SHEET & INDEX
2	-----	LEGEND & GENERAL NOTES
3–4	-----	TYPICAL SECTIONS
5–6	-----	PARCEL SUMMARY SHEET
7	-----	LOCATION PLAN
8–22	-----	PROPERTY PLANS & PROFILES

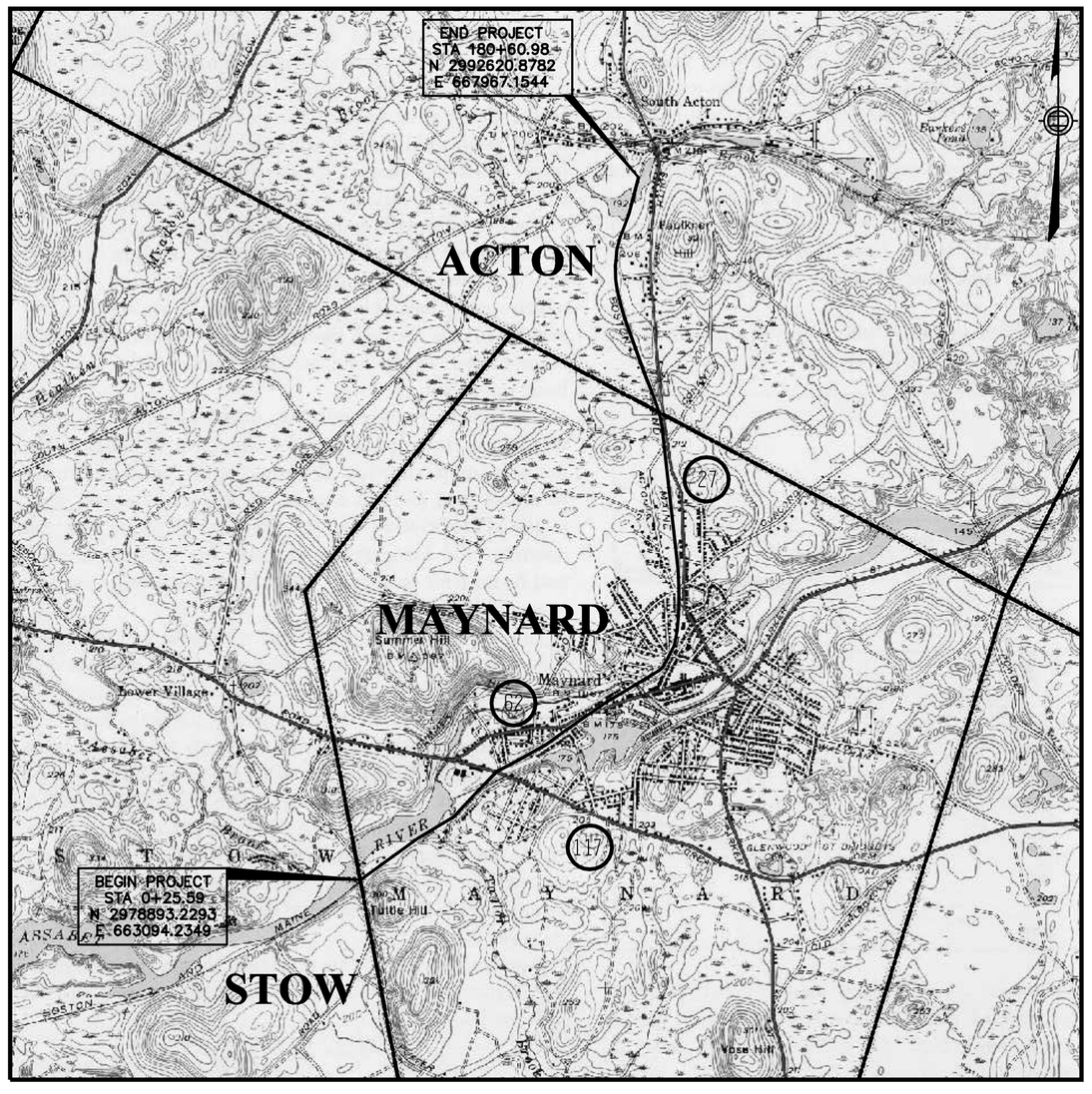

SCALE: 1: 2000

2000 0 4000 10000

NOTE:
LENGTH OF PROJECT = 16,937 ft = 3.2078 mi

COUNTY, CITY or TOWN BOUNDARY LINE
COUNTY, CITY or TOWN SIDE LINE
FENCE LINE — x — x —
BASE or SURVEY LINE — 153 — S47°–21'–41"E 4336.03'
RIGHT OF WAY LINE
CULVERT

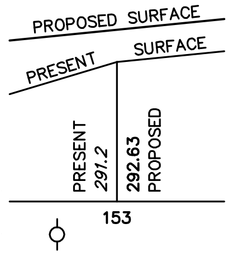

ELEVATIONS
POLE

DESIGN DESIGNATION

ARRT

DESIGN SPEED	15 mph
ADT – 2007	N/A vpd
ADT – 2017	N/A vpd
K	NA
D	NA
T (PEAK HOUR)	NA
T (AVERAGE DAY)	NA
DHV	NA
DDHV	NA

PRELIMINARY
RIGHT OF WAY PLANS

MAY 2012

TRANSPORTATION
AECOM
AECOM TECHNICAL SERVICES, Inc.
250 Apollo Drive
Chelmsford, Massachusetts 01824
T 978.905.2100 F 978.905.2101
www.aecom.com

Moving Massachusetts Forward. massDOT Highway

RECOMMENDED FOR APPROVAL

CHIEF ENGINEER Date

DEPARTMENT OF TRANSPORTATION
FEDERAL HIGHWAY ADMINISTRATION

APPROVED

DIVISION ADMINISTRATOR Date

APPROVED

DIVISION ADMINISTRATOR Date

L:\Work\701222\CADD\Civil\Maps\ROW\20120211TitleSheet.dwg 5/2/2011 9:56:22 AM EST

GENERAL LEGEND

EXISTING	PROPOSED	
CB	CB	CATCH BASIN
CBCI	CBCI	CATCH BASIN WITH CURB INLET
		CURB (OR BERM)
		EDGE OF PAVEMENT
EMH	EMH	ELECTRIC MANHOLE
SMH	SMH	SEWER MANHOLE
DMH	DMH	DRAINAGE MANHOLE
GG	GG	GAS GATE
WG	WG	WATER GATE
HYD	HYD	HYDRANT
FA	FA	FIRE ALARM BOX
		STREET LIGHT
		GUY POLE
		BOUND
		HIGHWAY GUARD
		CHAIN LINK FENCE
		RIGHT OF WAY LINE (APPROX.)
		TREE
D		DRAIN PIPE
S		SEWER MAIN
G		GAS MAIN
W		WATER MAIN
E		ELECTRIC DUCT
(25.00)	25.00	ELEVATION
(25.00)	25.00	TOP OF CURB
(24.50)	24.50	BOTTOM OF CURB
		SIGN POST
	6"R	6" CURB REVEAL
		LIMIT OF GRADING
		TREE LINE
113.70 X	+ 114.50	SPOT ELEVATION
		STONE BALANCE WALL

TRAFFIC LEGEND

EXISTING	PROPOSED	
		DIRECTION OF FLOW
		TRAFFIC SIGN AND POST
	ONLY / CW	PAVEMENT ARROW AND LEGEND
	CW	CROSSWALK, 2–12" WHITE
	SL	STOP LINE, 12" WHITE
	BWLL	BROKEN WHITE LANE LINE – 4"
	SWLL	SOLID WHITE LANE LINE – 4"
	SYCHL	SOLID YELLOW CHANNELIZING LINE – 8"
	SWCHL	SOLID WHITE CHANNELIZING LINE – 8"
	BYCL	BROKEN YELLOW CENTERLINE – 4"
	DYCL	DOUBLE YELLOW CENTERLINE – 4"
	SYBL	SOLID YELLOW BARRIER LINE – 4"
	SWBL	SOLID WHITE BARRIER LINE – 4"
	SYEL	SOLID YELLOW EDGE LINE – 4"
	SWEL	SOLID WHITE EDGE LINE – 4"
	SYL	SOLID YELLOW LINE – 4"
		CONTROL CABINET GROUND MOUNTED
		SIGNAL POST & BASE
	25' MA	MAST ARM, SHAFT & BASE
		VEHICULAR SIGNAL HEAD
		PEDESTRIAN SIGNAL HEAD
		PULL BOX
		DETECTOR
		CONDUIT
X	X	"X" DUCT (CONC. ENCASED)

ALIGNMENT/GRADING

PI	POINT OF INTERSECTION
PC	POINT OF CURVE
PT	POINT OF TANGENT
PRC	POINT OF REVERSE CURVE
PCC	POINT OF COMPOUND CURVE
PVC	POINT OF VERTICAL CURVE
PVT	POINT OF VERTICAL TANGENT
PVRC	POINT OF VERTICAL REVERSE CURVE
PVCC	POINT OF VERTICAL COMPOUND CURVE
PVI	POINT OF VERTICAL INTERSECTION
ELEV	ELEVATION
CC	CENTER OF CURVE
PNT	POINT
PGL	PROFILE GRADE LINE
SSD	STOPPING SIGHT DISTANCE
PSD	PASSING SIGHT DISTANCE

UTILITIES

CIT	CHANGE IN TYPE
F&G	FRAME AND GRATE
F&C	FRAME AND COVER
RCP	REINFORCED CONCRETE PIPE
VCP	VITRIFIED CLAY PIPE
PVC	POLYVINYLCHLORIDE PIPE
ACCMP	ASPHALT COATED CORRUGATED METAL PIPE
CIP	CAST IRON PIPE
DIP	DUCTILE IRON PIPE
HYD	HYDRANT
CAP	CORRUGATED ALUMINUM PIPE
INV	INVERT ELEVATION
PWW	PAVED WATER WAY
UP	UTILITY POLE
LP	LIGHT POLE
TSV & B	TAPPING SLEEVE, VALVE AND BOX
COND	CONDUIT

GENERAL

PROP	PROPOSED	NIC	NOT IN CONTRACT
MIN	MINIMUM	NTS	NOT TO SCALE
MAX	MAXIMUM	TYP	TYPICAL
RET	RETAIN	APPROX	APPROXIMATE
REM	REMOVE	NC	NORMAL CROWN
REMOD	REMODEL	CONST	CONSTRUCT
ABAN	ABANDON	BND	BOUND
ADJ	ADJUST	RECONST	RECONSTRUCT(ION)
EXIST	EXISTING	HMA	HOT MIX ASPHALT
R&R	REMOVE AND RESET	HDWL	HEADWALL
R&S	REMOVE AND STACK	PSB	PLANTABLE SOIL BORROW
R&D	REMOVE AND DISCARD	CEM	CEMENT
FND	FOUNDATION	CONC	CONCRETE
ELEV	ELEVATION	BSW	BACK OF SIDEWALK
BOS	BOTTOM OF SLOPE	TE	TERMINAL END
TOS	TOP OF SLOPE	WCR	WHEEL CHAIR RAMP
VGC	VERTICAL GRANITE CURB	PVM'T	PAVEMENT
SGE	SLOPED GRANITE EDGING	GRAN	GRANITE
CC	CONCRETE CURB	EOP	EDGE OF PAVEMENT
HMHB	HOT MIX ASPHALT BERM		
HMAC	HOT MIX ASPHALT CURB		

SURVEY NOTES

1. SURVEY PERFORMED BY THOMAS LAND SURVEYORS & ENGINEERING CONSULTANTS, INC., MARCH 23, 2006.
2. EXISTING UTILITY LINES SHOWN ON THIS DRAWING ARE FROM AVAILABLE INFORMATION AND ARE APPROXIMATE LOCATIONS. THERE MAY BE EXISTING LINES OTHER THAN THOSE INDICATED. LOCATION OF ALL UTILITIES AND SUBSURFACE STRUCTURES ARE FROM SURVEY AND RECORDS OF THE TOWN OR PRIVATE UTILITY COMPANIES AND ARE CONSIDERED APPROXIMATE BOTH AS TO SIZE AND LOCATION, AND ARE INDICATED ON THESE DRAWINGS TO GIVE BIDDERS A GENERAL IDEA OF EXISTING CONDITIONS TO BE INVESTIGATED BY THE BIDDER. IT IS UNDERSTOOD AND AGREED THAT EACH BIDDER WILL NOT RELY UPON THESE DRAWINGS FOR SUCH INFORMATION, BUT THAT EACH BIDDER SHALL MAKE EXAMINATIONS IN THE FIELD BY VARIOUS AVAILABLE RECORDS, UTILITY CORPORATIONS AND INDIVIDUALS AS TO THE LOCATION OF ALL SUBSURFACE STRUCTURES.
3. HORIZONTAL CONTROL IS BASED UPON THE NORTH AMERICAN DATUM OF 1983, (NAD–83–96), MASSACHUSETTS STATE PLANE COORDINATE SYSTEM MAINLAND ZONE.
4. VERTICAL CONTROL IS BASED UPON THE NGVD OF 1929. THE PROPERTY LINES SHOWN HEREON ARE APPROXIMATE ONLY AND ARE BASED UPON ASSESSORS INFORMATION SUPPLIED FOR THIS PROJECT. ALL DISTANCES, ELEVATIONS AND DIMENSIONS SHOWN HEREON ARE BASED UPON ENGLISH UNITS.

GENERAL NOTES

1. PEDESTRIAN AND VEHICLE ACCESS TO ABUTTING PREMISES MUST BE MAINTAINED IN A SAFE CONDITION AT ALL TIMES.
2. GRANITE CURBING IS TO BE SET WITH A 6 INCH REVEAL AFTER FINAL PAVING. IN SOME LOCATIONS CONTROL GRADES ARE INDICATED ON THE PLANS. THE CONTRACTOR SHALL BE REQUIRED TO MEET WITH THESE GRADES WHILE PROVIDING A SMOOTH VERTICAL TRANSITION BETWEEN CONTROL ELEVATIONS.
3. EXISTING PAVEMENTS AND/OR SIDEWALKS SHALL BE SAW CUT WHERE THEY MEET PROPOSED SURFACE TREATMENTS. SAW CUTS SHALL BE SMOOTH AND STRAIGHT. WHERE NEW BITUMINOUS CONCRETE MEETS EXISTING BITUMINOUS CONCRETE SURFACES, SAW CUT EDGES ARE TO BE SEALED WITH BITUMEN AND BACKSANDED.
4. AREAS OUTSIDE THE LIMITS OF WORK DISTURBED BY THE CONTRACTOR DURING CONSTRUCTION SHALL BE RESTORED TO THEIR ORIGINAL CONDITION AT THE EXPENSE OF THE CONTRACTOR.
5. ALL MUNICIPALLY OWNED UTILITY STRUCTURES INCLUDING MANHOLES, CATCH BASINS, AND GATE BOXES SHALL BE ADJUSTED OR REMODELED TO FINISHED GRADE BY THE CONTRACTOR. ALL PRIVATELY OWNED UTILITY STRUCTURES SHALL BE ADJUSTED OR REMODELED BY THE OWNER.
6. LIMITS OF WORK HAVE BEEN SET ON THE PLANS, HOWEVER, THESE MAY BE EXTENDED OR REDUCED AT THE DISCRETION OF THE ENGINEER TO MEET WITH FIELD CONDITIONS.
7. AT ALL POSTS AND POLES, PROPOSED CEMENT CONCRETE SIDEWALK SHALL BE BOXED AND PROVIDED WITH EXPANSION JOINT FILLER. ALSO, EXPANSION JOINT FILLER SHALL BE USED AT ALL BACK OF SIDEWALK LOCATIONS WHERE LOCATIONS MEET EXISTING BUILDINGS, WALLS OR OTHER STRUCTURES AND AS OTHERWISE DIRECTED BY THE ENGINEER.
8. ALL PROPOSED GRANITE CURB SHALL BE TYPE VB OR EXISTING CURB, REMOVED AND RESET, UNLESS OTHERWISE NOTED.
9. ALL EXISTING SURFACES, i.e. CEMENT CONCRETE, BITUMINOUS CONCRETE PAVEMENT, BRICK, ETC., SHALL BE COMPLETELY REMOVED FROM AREAS OF PROPOSED WORK INCLUDING PROPOSED PLANTING AREAS.
10. THE CONTRACTOR SHALL COORDINATE AND BE RESPONSIBLE FOR ALL SAFETY SIGNING, BARRIERS AND TEMPORARY PAVEMENT MARKINGS NECESSARY TO PROVIDE A SMOOTH AND PROPER TRANSITION FOR TRAFFIC FLOW.
11. IF REQUIRED BY THE CONTRACTOR, OVERHEAD LINES SHALL BE RELOCATED BY THE UTILITY COMPANY AT THE CONTRACTOR'S EXPENSE. CONTRACTOR MADE AWARE THAT EXISTING UTILITY POLES ON PLANS HAVE BEEN RELOCATED BY THEIR RESPECTIVE UTILITY COMPANIES.
12. THE CONTRACTOR SHALL FIELD CHECK ALL DIMENSIONS, AND ELEVATIONS BEFORE PROCEEDING WITH NEW WORK. THE CONTRACTOR SHALL EXCAVATE TO VERIFY PERTINENT DRAINAGE INVERTS AND POTENTIAL UTILITY CONFLICTS. ANY DISCREPANCIES OR CONFLICTS SHALL BE REPORTED TO THE ENGINEER IMMEDIATELY.
13. ALL CURB TIES WHICH ARE NOTED BY A STATION ARE FROM THE CONSTRUCTION BASELINE.
14. CURB CORNERS AT DRIVEWAYS SHALL BE GRANITE CURB CORNER, TYPE B, UNLESS NOTED OTHERWISE.
15. LOCATIONS OF PROPOSED SIGNS, TREES, ETC. ARE APPROXIMATE ONLY; THE EXACT LOCATION SHALL BE DETERMINED BY THE ENGINEER IN THE FIELD.
16. ALL CEMENT CONCRETE SUBBASE SURFACES SHALL BE TREATED WITH A BITUMEN TACK COAT PRIOR TO THE APPLICATION OF A BITUMINOUS CONCRETE MATERIAL.

SIGN LEGEND

STOP	R1–1 (18")
	W11–1
NO MOTOR VEHICLES	R5–3
BIKE ROUTE	D11–1
USE PED SIGNAL	R9–5

2'–0" × 2'–0"

MARLBOROUGH • HUDSON • STOW • MAYNARD • ACTION

AR RT

TRAIL LOGO SIGN
SP–1

NOTE:
- SIGN PANEL TO BE GREEN
- TEXT, GRAPHICS, AND BORDER TO BE WHITE
- SHOP DRAWING TO BE SUBMITTED FOR REVIEW PRIOR TO ORDERING

MAYNARD–ACTON
ASSABET RIVER RAIL TRAIL

STATE	FED. AID PROJ. NO.	SHEET NO.	TOTAL SHEETS
MASS.		2	22
PROJECT FILE NO. 604531			

PRELIMINARY
RIGHT OF WAY PLANS
LEGEND & GENERAL NOTES

L:\work\t0932201\ADMIN\Preliminary\0932SGAN01.03.2223.2020Legendsdwg 10/10/2011 9:56:22 AM EST EDT

MAYNARD–ACTON
ASSABET RIVER RAIL TRAIL

STATE	FED. AID PROJ. NO.	SHEET NO.	TOTAL SHEETS
MASS.		3	22
PROJECT FILE NO. 604531			

PRELIMINARY
RIGHT OF WAY PLANS
TYPICAL SECTIONS

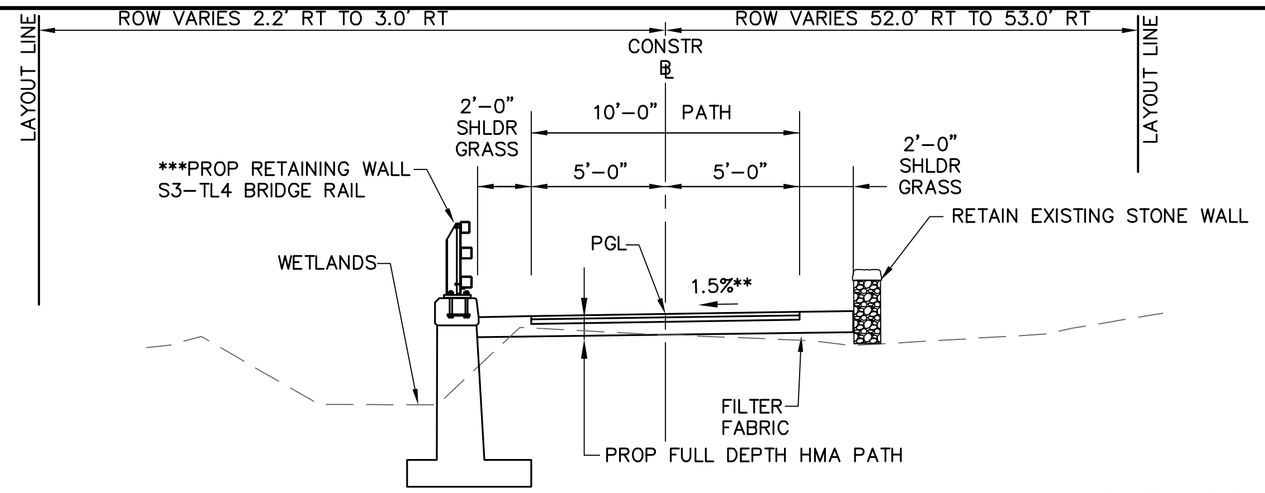

TYPICAL PATH – STA 135+15 TO 136+45
TYPICAL PATH – STA 136+80 TO 137+80
FULL DEPTH PAVEMENT

**TOLERANCE FOR CONSTRUCTION ±0.5%

***STA 131+70 TO 135+40 NO RETAINING WALL ON LEFT SIDE

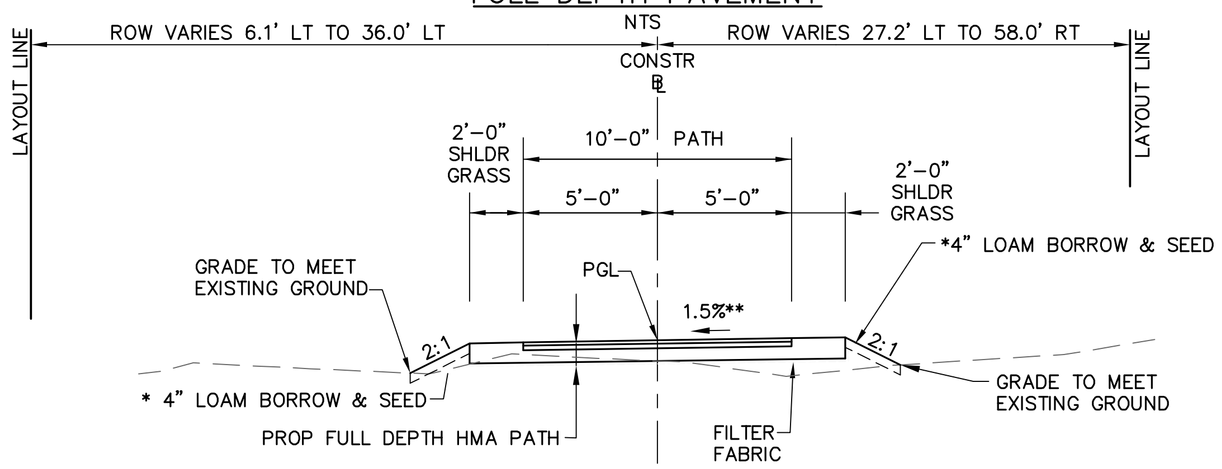

TYPICAL PATH – STA 64+00 TO 66+50
TYPICAL PATH – STA 67+00 TO 67+60
FULL DEPTH PAVEMENT

*TYPICAL SLOPE TREATMENTS
STEEPER THAN 1:3 – 4" LOAM BORROW & SEED W/HAY MULCH FOR EROSION CONTROL

**TOLERANCE FOR CONSTRUCTION ±0.5%

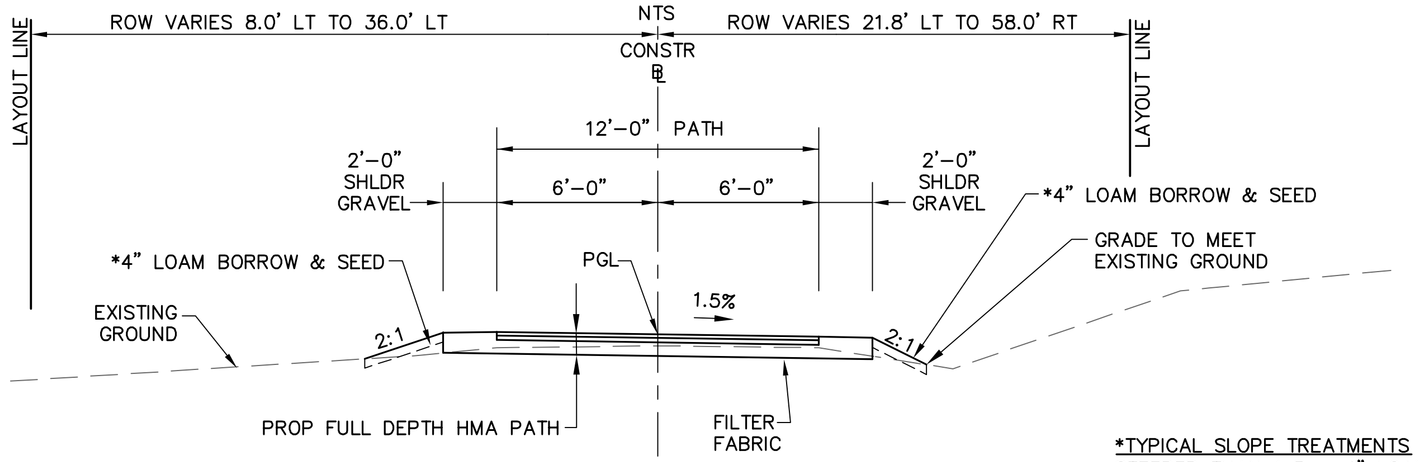

TYPICAL PATH – STA 0+25 TO 30+00
TYPICAL PATH – STA 76+50 TO 86+80
TYPICAL PATH – STA 87+30 TO 89+50
TYPICAL PATH – STA 172+20 TO 180+60
FULL DEPTH PAVEMENT

*TYPICAL SLOPE TREATMENTS
STEEPER THAN 1:3 – 4" LOAM BORROW & SEED W/HAY MULCH FOR EROSION CONTROL
1:1 RIP–RAP SLOPE AT THE FOLLOWING STATIONS:
STA 17+50 TO 18+25 LT

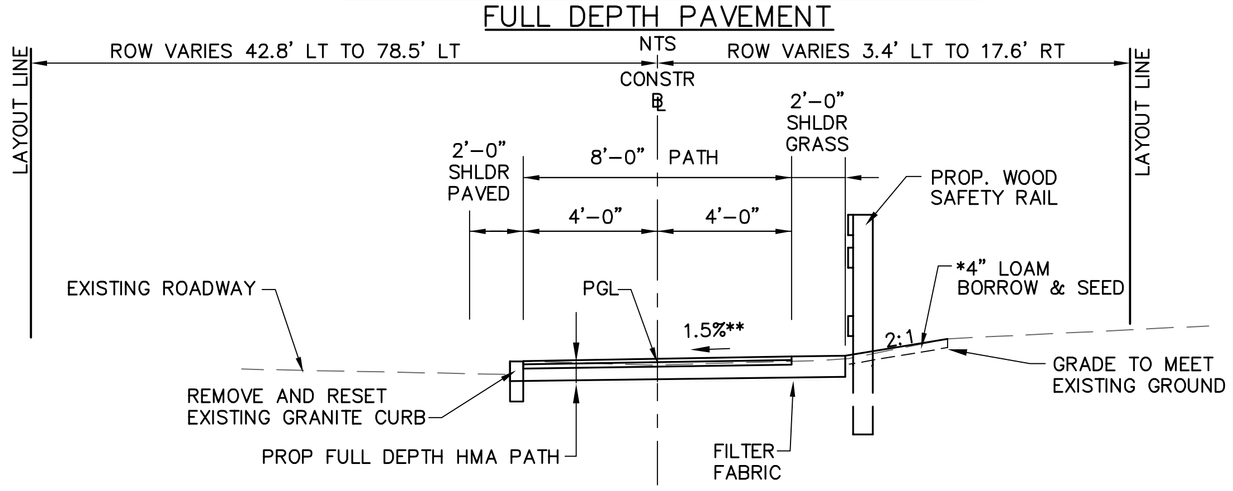

TYPICAL PATH – STA 52+00 TO 57+50
FULL DEPTH PAVEMENT
NTS

*TYPICAL SLOPE TREATMENTS
STEEPER THAN 1:3 – 4" LOAM BORROW & SEED W/HAY MULCH FOR EROSION CONTROL

**TOLERANCE FOR CONSTRUCTION ±0.5%

HOT MIX ASPHALT BIKE PATH

SURFACE COURSE: 4" HOT MIX ASPHALT PLACED IN TWO LAYERS, 2" MODIFIED TOP COURSE MATERIAL OVER 2" DENSE BINDER COURSE MATERIAL.

SUBBASE: 12" GRAVEL BORROW TYPE B OVER FILTER FABRIC

HOT MIX ASPHALT DRIVEWAY

SURFACE COURSE: 3–1/2" HOT MIX ASPHALT PLACED IN TWO LAYERS, 1–3/4" MODIFIED TOP COURSE MATERIAL OVER 1–3/4" DENSE BINDER COURSE MATERIAL

SUBBASE: 8" GRAVEL BORROW TYPE B

CEMENT CONCRETE SIDEWALK

SURFACE COURSE: 4" CEMENT CONCRETE

SUBBASE: 8" GRAVEL BORROW TYPE B

CEMENT CONCRETE SIDEWALK @ DRIVEWAYS

SURFACE COURSE: 6" CEMENT CONCRETE

SUBBASE: 8" GRAVEL BORROW TYPE B

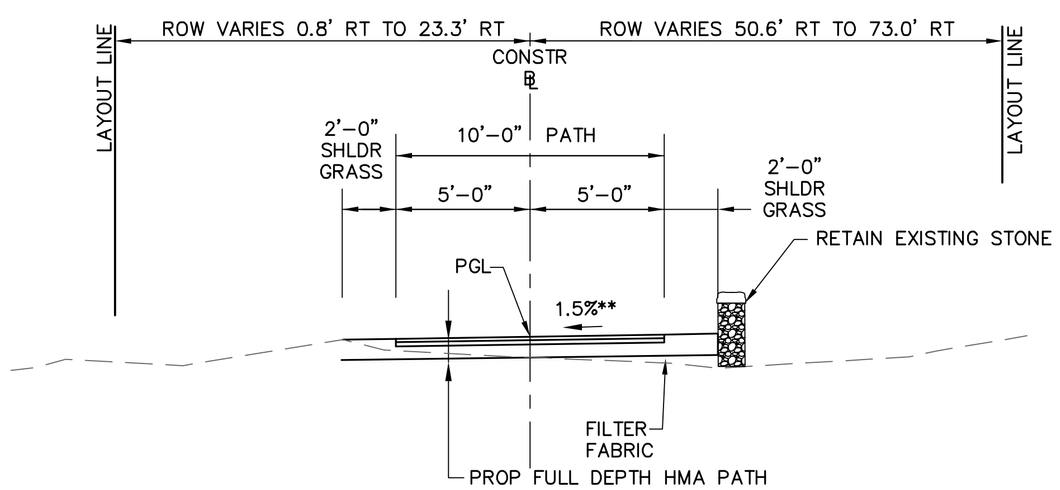

TYPICAL PATH – STA 132+30 TO 135+15
FULL DEPTH PAVEMENT

NTS

*TYPICAL SLOPE TREATMENTS
STEEPER THAN 1:3 – 4" LOAM BORROW & SEED W/HAY MULCH FOR EROSION CONTROL

**TOLERANCE FOR CONSTRUCTION ±0.5%

***STA 131+70 TO 135+40 NO RETAINING WALL ON LEFT SIDE

L:\work\10222\(CAD\Civil\Design\MAYNARD TYP1.dgn 11:40:13 AM EST 1:40 #2/28/2013

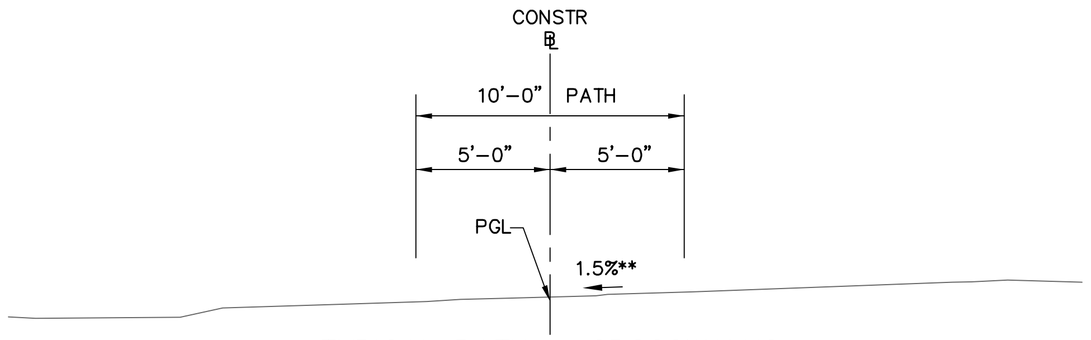

TYPICAL PATH – CROSSWALKS
PAVEMENT MARKINGS ONLY

**TOLERANCE FOR CONSTRUCTION ±0.5%

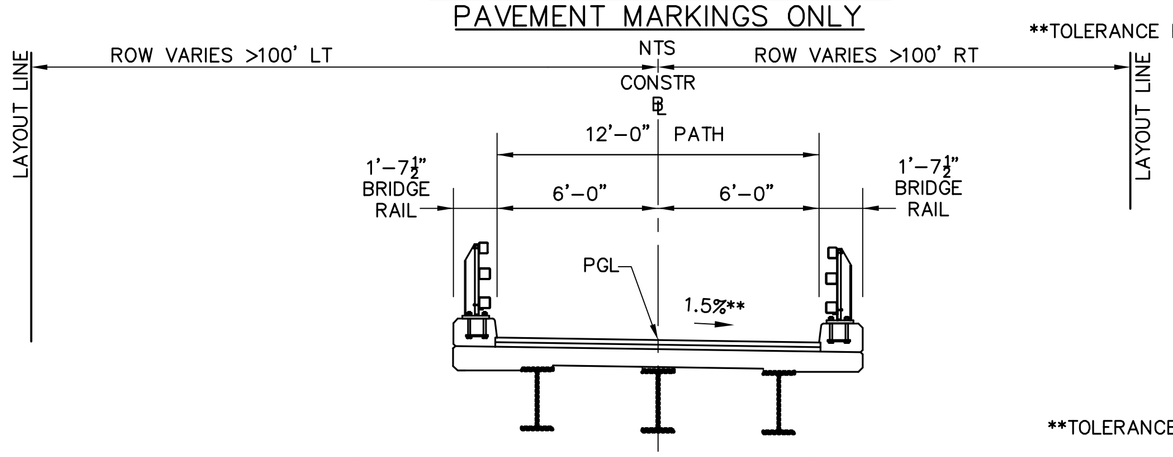

**TOLERANCE FOR CONSTRUCTION ±0.5%

TYPICAL PATH – STA 66+47 TO 66+99
TYPICAL PATH – STA 170+06 TO 170+75
PREFABRICATED BRIDGE

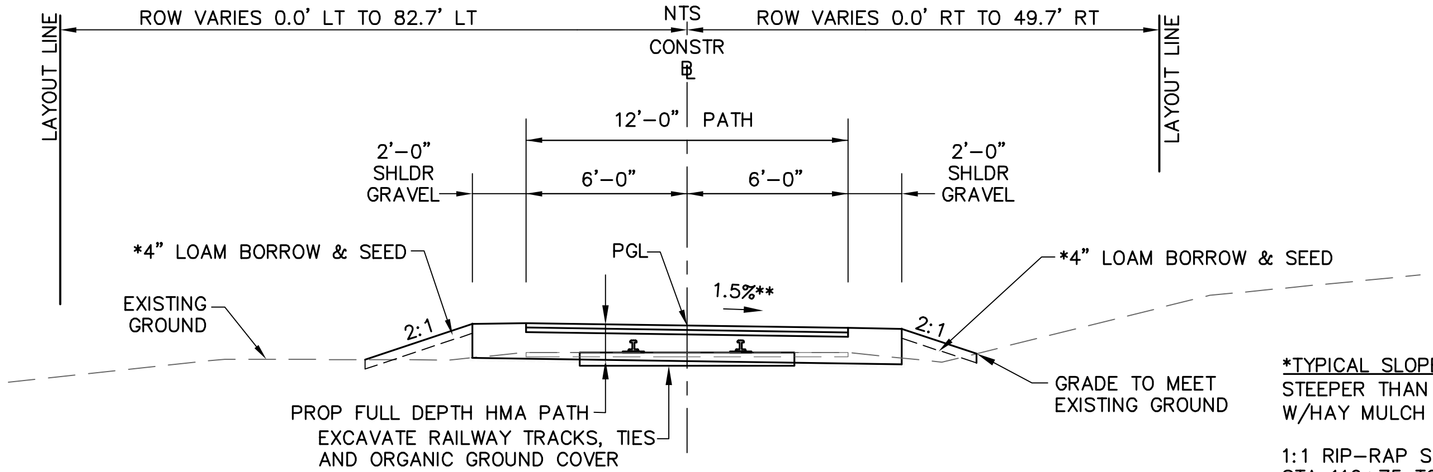

TYPICAL PATH – STA 35+00 TO 50+10
TYPICAL PATH – STA 89+80 TO 115+95
TYPICAL PATH – STA 116+30 TO 132+00
TYPICAL PATH – STA 141+10 TO 170+05
TYPICAL PATH – STA 170+75 TO 172+20
FULL DEPTH PAVEMENT

*TYPICAL SLOPE TREATMENTS
STEEPER THAN 1:3 – 4" LOAM BORROW & SEED
W/HAY MULCH FOR EROSION CONTROL

1:1 RIP-RAP SLOPE AT THE FOLLOWING STATIONS:
STA 110+75 TO 111+25 RT
STA 118+00 TO 131+00 LT & RT
STA 154+00 TO 172+00 LT & RT

**TOLERANCE FOR CONSTRUCTION ±0.5%

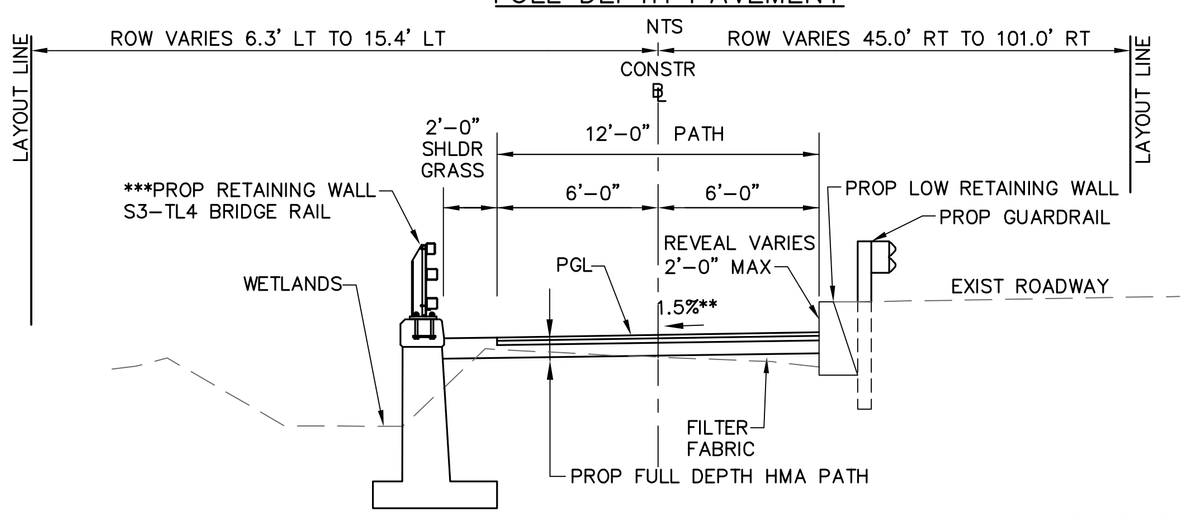

**TOLERANCE FOR CONSTRUCTION ±0.5%

TYPICAL PATH – STA 30+00 TO 33+20
FULL DEPTH PAVEMENT
NTS

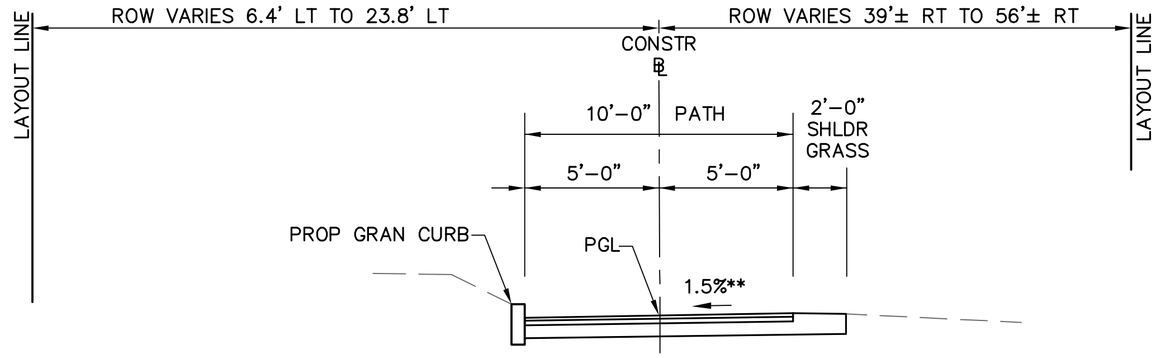

TYPICAL PATH – STA 73+50 TO 75+50
FULL DEPTH PAVEMENT

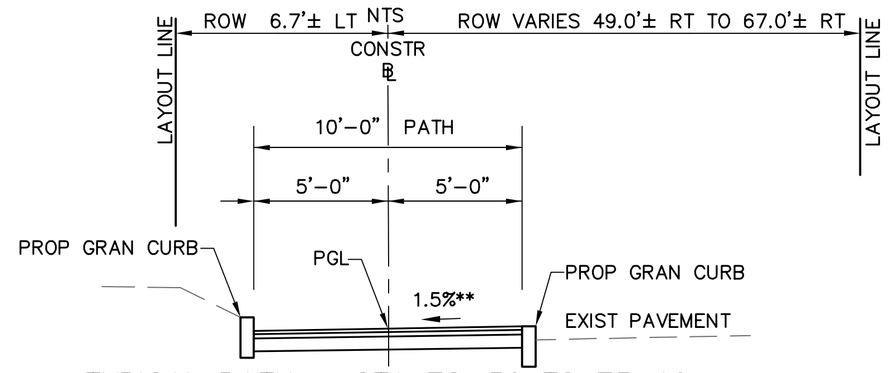

TYPICAL PATH – STA 72+50 TO 73+10
FULL DEPTH PAVEMENT

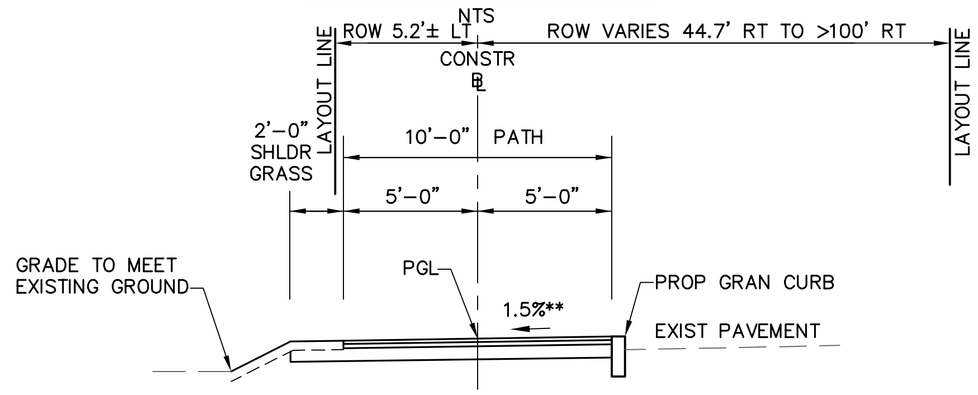

TYPICAL PATH – STA 50+10 TO 51+10
FULL DEPTH PAVEMENT

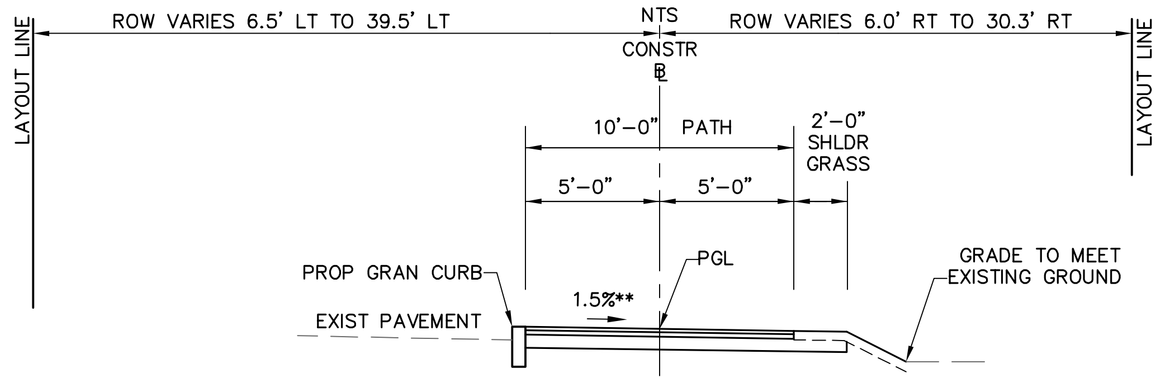

TYPICAL PATH – STA 67+80 TO 69+00
TYPICAL PATH – STA 69+30 TO 71+00
TYPICAL PATH – STA 71+30 TO 71+50
FULL DEPTH PAVEMENT

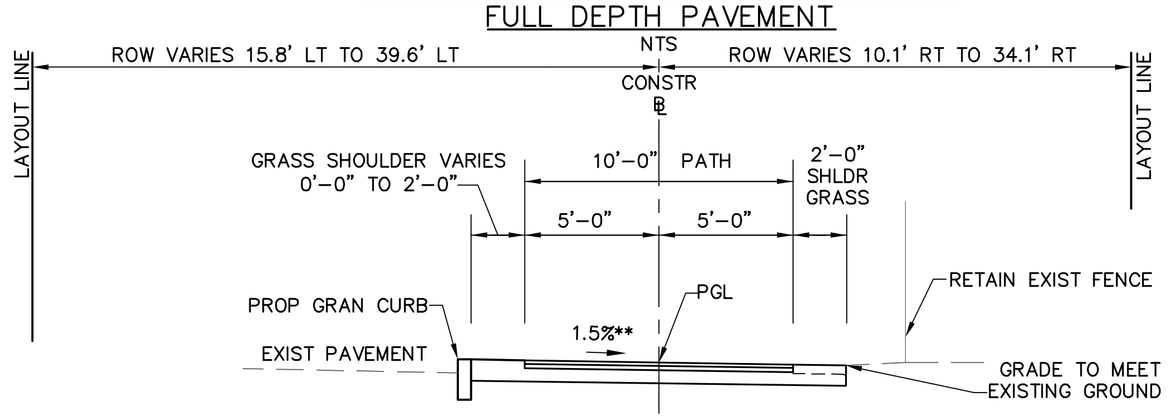

TYPICAL PATH – STA 57+85 TO 63+70
FULL DEPTH PAVEMENT
NTS

MAYNARD–ACTON
ASSABET RIVER RAIL TRAIL

STATE	FED. AID PROJ. NO.	SHEET NO.	TOTAL SHEETS
MASS.		4	22
PROJECT FILE NO. 604531			

PRELIMINARY
RIGHT OF WAY PLANS
TYPICAL SECTIONS

L:\work\10122211\CAD\25%\Drawings\PRO\A3\01@1 S3&4Gdr.dwg Section 1:40 11:40:13 AM EST

MAYNARD–ACTON
ASSABET RIVER RAIL TRAIL

STATE	FED. AID PROJ. NO.	SHEET NO.	TOTAL SHEETS
MASS.		5	22
PROJECT FILE NO. 604531			

PRELIMINARY RIGHT OF WAY PLANS PARCEL SUMMARY SHEET

PLAN SHEET	PARCEL NO.	OWNER OF RECORD	TOTAL AREA	AREA OF TAKING	AREA REMAINING	EASEMENT		RECORDED			REMARKS
						TYPE	AREA	BK	PG	CERT	
10	X–SW–1	WELLESLEY/ROSEWOOD/MAYNARD MILLS	129,809 S.F. (2.98 AC)	804.2 S.F. (0.02 AC)	129,004.8 S.F. (2.96 AC)			27896	474		WALKWAY & RETAINING WALL
	X–SW–2	LIMITED PARTNERSHIP	129,004.8 S.F. (2.96 AC)	52.5 S.F. (0.00 AC)	128,952.3 S.F. (2.96 AC)						WALKWAY & RETAINING WALL
	X–W–1					PERMANENT	1,637.4 S.F. (0.04 AC)				RETAINING WALL MAINTENANCE
11	X–SW–3	VINCENT DINH & BIND ZOU	7,035 S.F. (0.16 AC)	420.6 S.F. (0.01 AC)	6,614.4 S.F. (0.15 AC)			55296	271		SIDEWALK
	X–TE–1					TEMPORARY	618.4 S.F. (0.01 AC)				GRADING
11–12	X–SW–4	DIMOPOULOS FAMILY TRUST	42,907 S.F. (0.99 AC)	3,028.1 S.F. (0.07 AC)	39,878.1 S.F. (0.92 AC)			25051	306		SIDEWALK
	X–SW–5		39,878.1 S.F. (0.92 AC)	31.8 S.F. (0.00 AC)	39,846.3 S.F. (0.92 AC)						SIDEWALK
	X–F–1					PERMANENT	2,215.0 S.F. (0.05 AC)				FENCE
	X–TE–2					TEMPORARY	705.6 S.F. (0.02 AC)				GRADING
12	X–SW–6	WELLESLEY/ROSEWOOD/MAYNARD MILLS	1,664,400 S.F. (38.21 AC)	4,819.8 S.F. (0.11 AC)	1,659,580.2 S.F. (38.10 AC)			27896	474		SIDEWALK AND RAIL
		LIMITED PARTNERSHIP									
12	X–TE–3	151 MAIN STREET PARKING LLC				TEMPORARY	1,610.3 S.F. (0.04 AC)	53201	542		GRADING
13	X–TE–4	UNIT 1 MARIE BENOIT				TEMPORARY	423.5 S.F. (0.01 AC)	46114	379		GRADING
		UNIT 2 HAROON SIDDIQUI						45972	69		
		UNIT 3 DEREK CAROLAN & GLORIA VENDEGRIFT						54358	22		
		UNIT 4 CLAUDE & MARIE BERNABE						45874	443		
		UNIT 5 MARK MERULLO						45971	560		
		UNIT 6 ELIZABETH A DAHILL						45763	549		
13	X–TE–5	COLE CV MAYNARD MA LLC C/O CVS CORP #973–02				TEMPORARY	313.2 S.F. (0.01 AC)	52513	463		GRADING
13	X–TE–6	CENTRAL HUDSON INC				TEMPORARY	149.0 S.F. (0.00 AC)	40130	386		GRADING
13	X–TE–7	ILSE H PERLMAN TR C/O DANIEL PERLMAN				TEMPORARY	201.8 S.F. (0.00 AC)	25761	226		GRADING
13	X–SW–7	THE 24 NASON STREET REALTY TRUST	9,905 S.F. (0.23 AC)	113.6 S.F. (0.00 AC)	9,791.4 S.F. (0.23 AC)			46114	379		SIDEWALK
	X–TE–8	C/O AMY M CAO TRUSTEE				TEMPORARY	157.9 S.F. (0.00 AC)				GRADING
14	X–TE–9	LANDOIL REALTY TRUST, JOHN E DUNN TRUSTEE				TEMPORARY	1,243.1 S.F. (0.03 AC)	12617	154		GRADING
14	X–TE–10	42 SUMMER STREET LLC				TEMPORARY	1,663.6 S.F. (0.04 AC)	49948	309		GRADING
14	X–SW–8	KNIGHTS OF COLUMBUS C/O DAVE MCQUIGGAN	6,500 S.F. (0.15 AC)	138.5 S.F. (0.00 AC)	6,361.5 S.F. (0.15 AC)			6034	233		SIDEWALK
14	X–TE–11	DOROTHY B STATKUS L/E				TEMPORARY	1,269.0 S.F. (0.03 AC)	51914	89		GRADING
14	X–TE–12	CHARLES T & SANDRA DISMUKE				TEMPORARY	266.4 S.F. (0.01 AC)	37155	443		GRADING
14	X–TE–13	KATRINA S & BERNARD W CAHILL				TEMPORARY	228.6 S.F. (0.01 AC)	52785	115		GRADING
14	X–TE–14	BALL D FIFINE				TEMPORARY	80.5 S.F. (0.00 AC)	53025	66		GRADING
14	X–TE–15	JASON T & HOLLI J MURRAY				TEMPORARY	128.7 S.F. (0.00 AC)	47945	331		GRADING
14	X–TE–16	RICHARD N MARTIN IRREV TR				TEMPORARY	100.0 S.F. (0.00 AC)	54702	112		GRADING
14	X–TE–17	STEVEN D CHARRON & LISA M GRIMM				TEMPORARY	167.7 S.F. (0.00 AC)	37657	71		GRADING
15	X–SW–9	LANDOIL REALTY TRUST	14,040 S.F. (0.32 AC)	500.5 S.F. (0.01 AC)	13,539.5 S.F. (0.31 AC)			12617	154		SIDEWALK
	X–TE–18					TEMPORARY	1,093.3 S.F. (0.02 AC)				GRADING
15	X–TE–19	BOESKE BROS INC				TEMPORARY	1,617.4 S.F. (0.04 AC)	9961	477		GRADING
15–16	X–TE–20	ROBERT W YOUTT & KATHLEEN WHEELER				TEMPORARY	1,684.9 S.F. (0.00 AC)	26960	239		GRADING
16	X–TE–21	ANTHONY C & NOELLA MARIA				TEMPORARY	530.0 S.F. (0.01 AC)	11776	449		GRADING

DESIGNED BY
DRAWN BY
CHECKED BY
DATE

L:\work\101221\CAD\Preliminary ROW\101221 05–06 PARCEL SUMMARY.dwg 10/10/2011 10:37:40 AM EST

MAYNARD–ACTON
ASSABET RIVER RAIL TRAIL

STATE	FED. AID PROJ. NO.	SHEET NO.	TOTAL SHEETS
MASS.		6	22
PROJECT FILE NO. 604531			

PRELIMINARY RIGHT OF WAY PLANS PARCEL SUMMARY SHEET

PLAN SHEET	PARCEL NO.	OWNER OF RECORD	TOTAL AREA	AREA OF TAKING	AREA REMAINING	EASEMENT		RECORDED			REMARKS
						TYPE	AREA	BK	PG	CERT	
16	X–TE–22	RICHARD A & THERESA A SHEEHAN				TEMPORARY	352.1 S.F. (0.01 AC)	25452	231		GRADING
16	X–TE–23	NICHOLAS B JOHNSON & KELLI COSTA				TEMPORARY	64.4 S.F. (0.00 AC)	30487	268		GRADING
17	X–SW–10	FAIRWAY VIEW COMPANY	39,681.6 S.F. (0.91 AC)	39,681.6 S.F. (0.91 AC)	39,681.6 S.F. (0.91 AC)			31158	410		SIDEWALK
18	X–SW–11	WEDGEWOOD TRUST	37,288 S.F. (0.86 AC)	2,320.0 S.F. (0.05 AC)	34,968.0 S.F. (0.80 AC)			15316	533		SIDEWALK
	X–TE–24	JOSEPH V STUART & ROBERT E ANDERSON TR				TEMPORARY	2,713.7 S.F. (0.06 AC)				GRADING
	X–TE–25					TEMPORARY	2,598.2 S.F. (0.06 AC)				GRADING
18	X–SW–12	WEDGEWOOD TRUST	66,438 S.F. (1.53 AC)	2,641.4 S.F. (0.04 AC)	63,796.6 S.F. (1.49 AC)			15114	250		SIDEWALK
	X–TE–26	JOSEPH V STUART & ROBERT E ANDERSON TR				TEMPORARY	1,143.5 S.F. (0.03 AC)				GRADING
	X–TE–27					TEMPORARY	871.1 S.F. (0.02 AC)				GRADING
19	X–SW–13	WEDGEWOOD TRUST	88,245 S.F. (2.03 AC)	7,254.6 S.F. (0.17 AC)	80,990.4 S.F. (1.86 AC)			15114	250		SIDEWALK
	X–W–2	JOSEPH V STUART & ROBERT E ANDERSON TR	80,990.4 S.F. (1.86 AC)	934.1 S.F. (0.02 AC)	80,056.3 S.F. (1.84 AC)						WALL
	X–TE–28					TEMPORARY	3,195.0 S.F. (0.07 AC)				GRADING
19	X–SW–14	WEDGEWOOD TRUST	80,706 S.F. (1.86 AC)	18,994.0 S.F. (0.44 AC)	61,712 S.F. (1.42 AC)			15114	250		SIDEWALK OVER WETLAND
		JOSEPH V STUART & ROBERT E ANDERSON TR									
19	X–SW–15	WEDGEWOOD TRUST	11,814 S.F. (0.27 AC)	1,080.2 S.F. (0.02 AC)	10,733.8 S.F. (0.25 AC)			17178	196		SIDEWALK
	X–TE–29	JOSEPH V STUART & ROBERT E ANDERSON TR				TEMPORARY	1,318.2 S.F. (0.03 AC)				GRADING
	X–TE–30					TEMPORARY	641.2 S.F. (0.01 AC)				GRADING

DESIGNED BY
DRAWN BY
CHECKED BY
DATE
L:\work\101221\CAD\Preliminary ROW\101221 05–06 PARCEL SUMMARY.dwg 10/10/2011 10:37:40 AM EST

L:\work\101221\CAD\Preliminary ROW\101221 07 Location Plan.dwg 10/18/2011 5:22:06 PM EST

MAYNARD–ACTON
ASSABET RIVER RAIL TRAIL

STATE	FED. AID PROJ. NO.	SHEET NO.	TOTAL SHEETS
MASS.		7	22
PROJECT FILE NO. 604531			

PRELIMINARY
RIGHT OF WAY PLANS
LOCATION PLAN

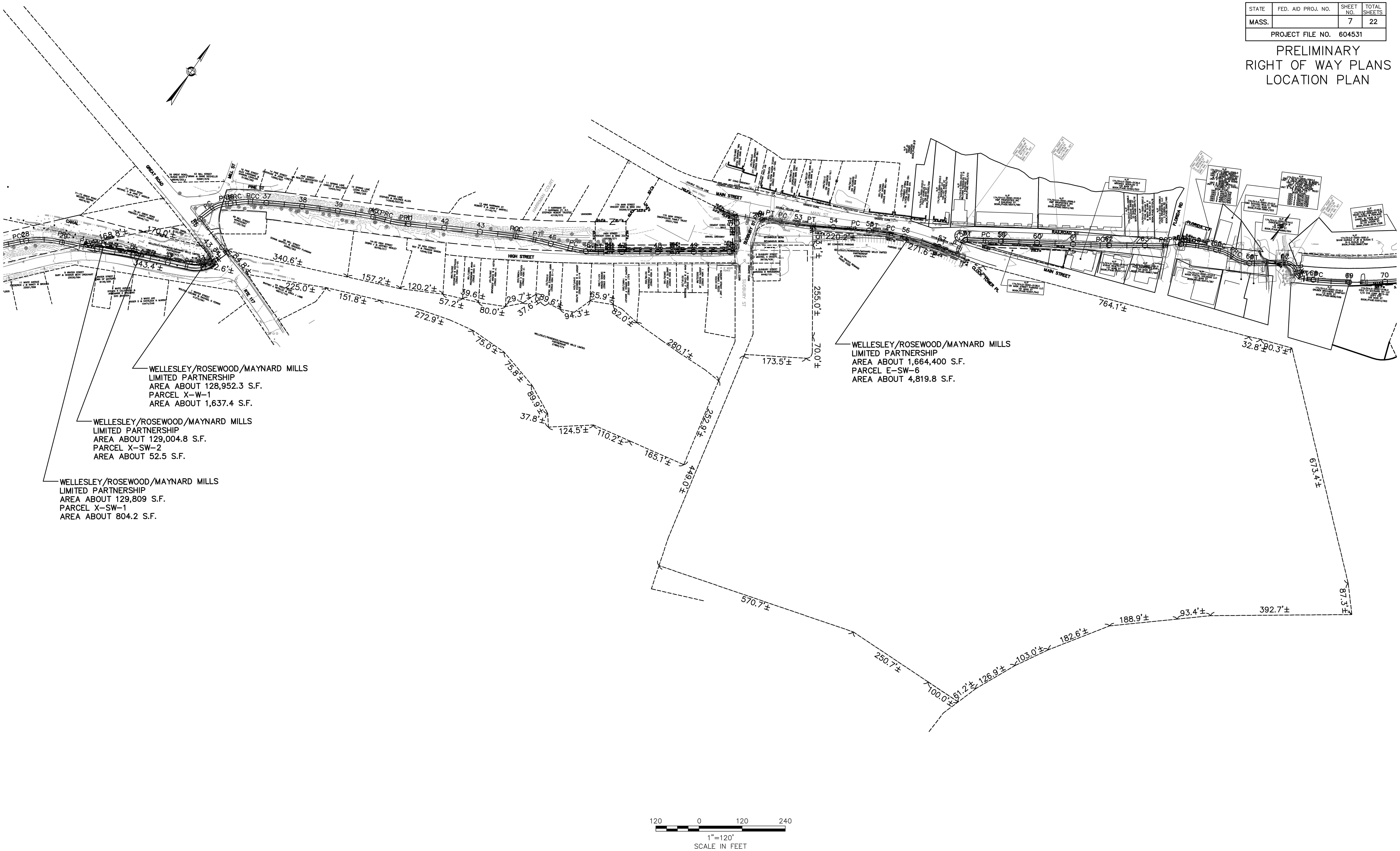

STEEL W BEAM HIGHWAY GUARD
NONE

DRAINAGE DETAILS
SEE BELOW

WATER SUPPLY ALTERATIONS
NONE

TRAFFIC SIGNAL CONDUIT
NONE

MAYNARD–ACTON
ASSABET RIVER RAIL TRAIL

STATE	FED. AID PROJ. NO.	SHEET NO.	TOTAL SHEETS
MASS.		8	22
PROJECT FILE NO. 604531			

PRELIMINARY
RIGHT OF WAY PLANS
PROPERTY PLANS & PROFILES

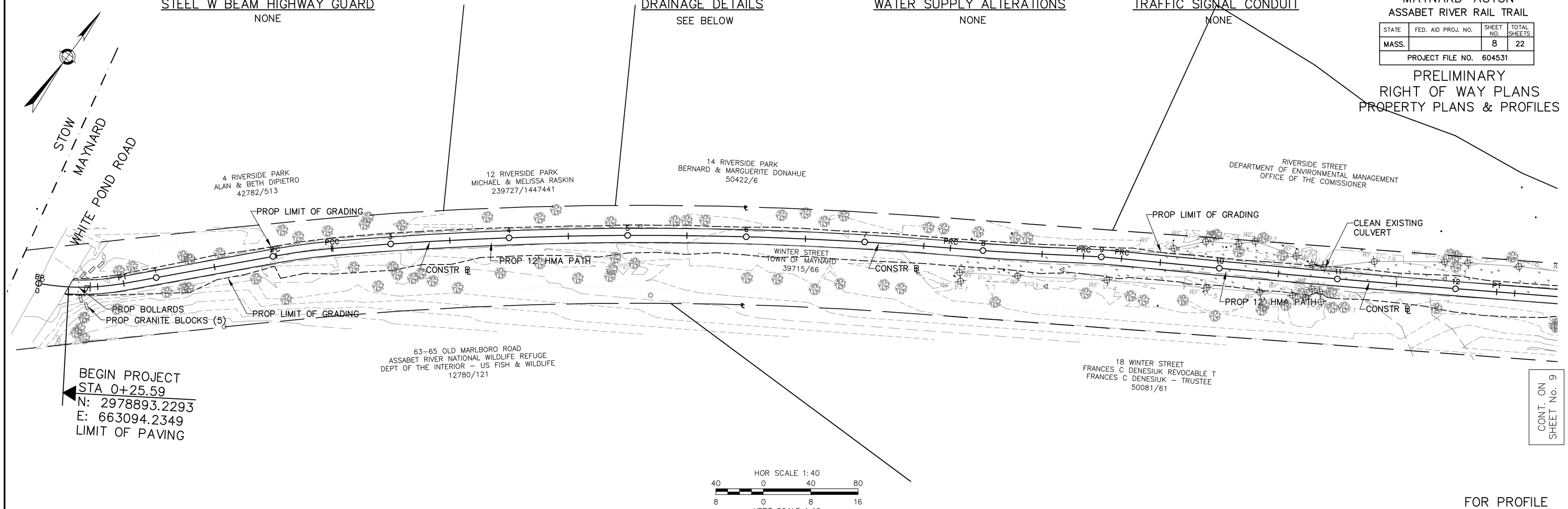

HOR SCALE 1:40
40 0 40 80
8 0 8 16
VERT SCALE 1:16
SCALE IN FEET

FOR PROFILE
SEE BELOW

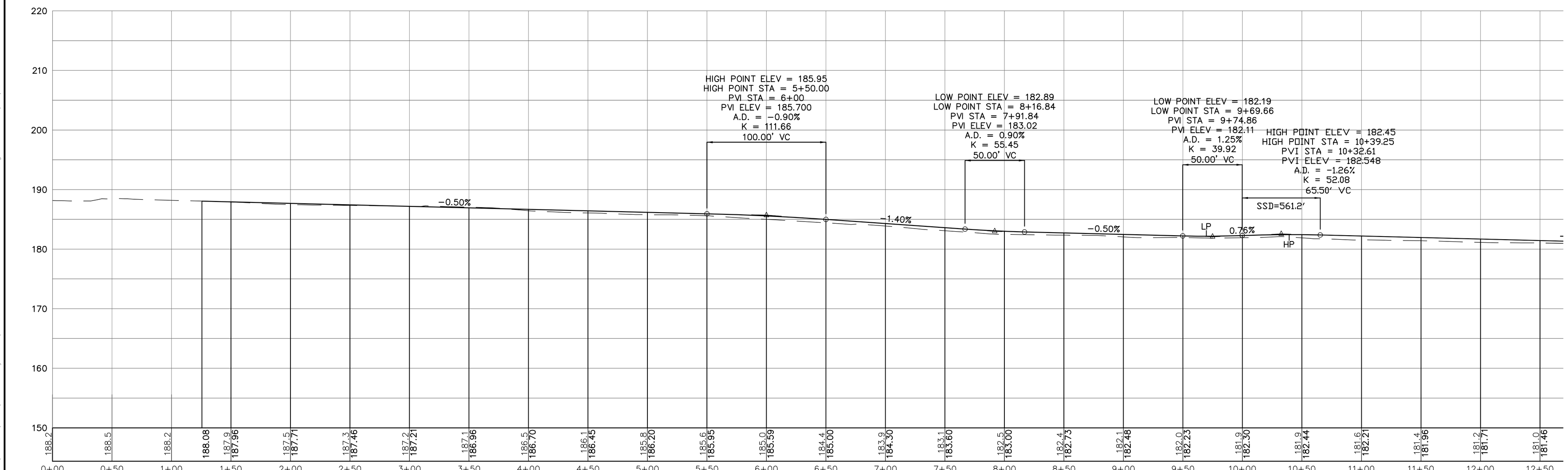

L:\work\101221\CAD\Preliminary ROW\101221 08-13 General Plan and Profile.dwg 10/18/2011 4:43:49 PM EST

STEEL W BEAM HIGHWAY GUARD
NONE

DRAINAGE DETAILS
NONE

WATER SUPPLY ALTERATIONS
NONE

TRAFFIC SIGNAL CONDUIT
NONE

MAYNARD–ACTON
ASSABET RIVER RAIL TRAIL

STATE	FED. AID PROJ. NO.	SHEET NO.	TOTAL SHEETS
MASS.		9	22
PROJECT FILE NO. 604531			

PRELIMINARY RIGHT-OF-WAY PLANS PROPERTY PLANS & PROFILES

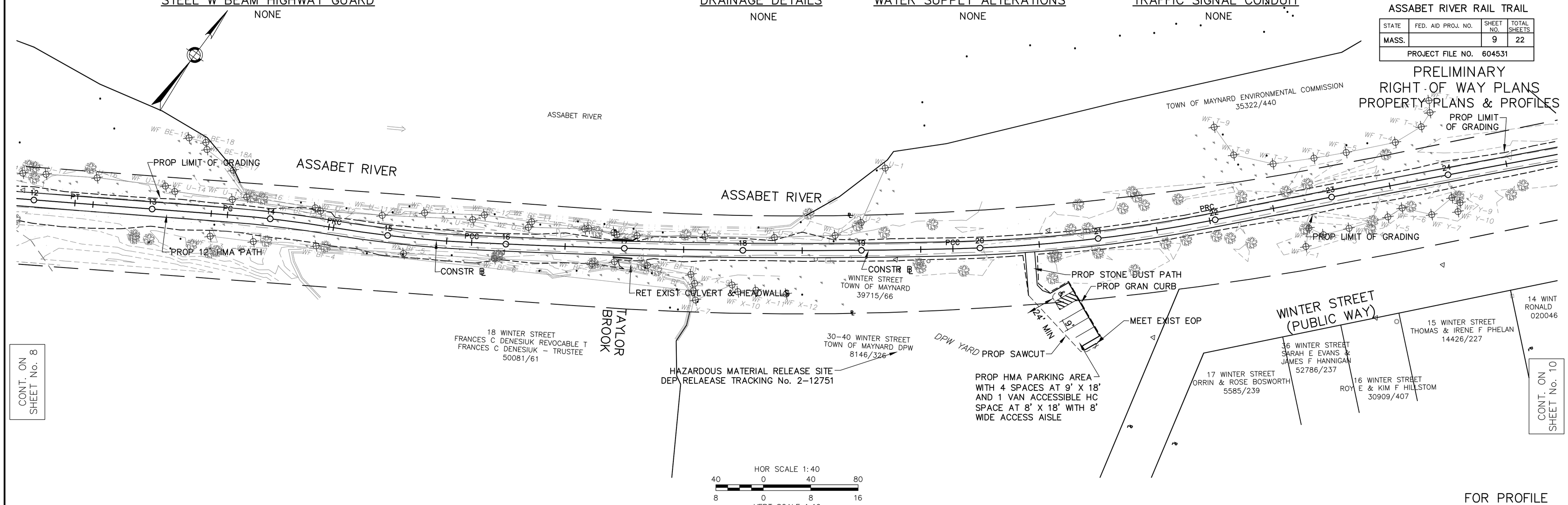

HOR SCALE 1:40
40 0 40 80
8 0 8 16
VERT SCALE 1:16
SCALE IN FEET

FOR PROFILE SEE BELOW

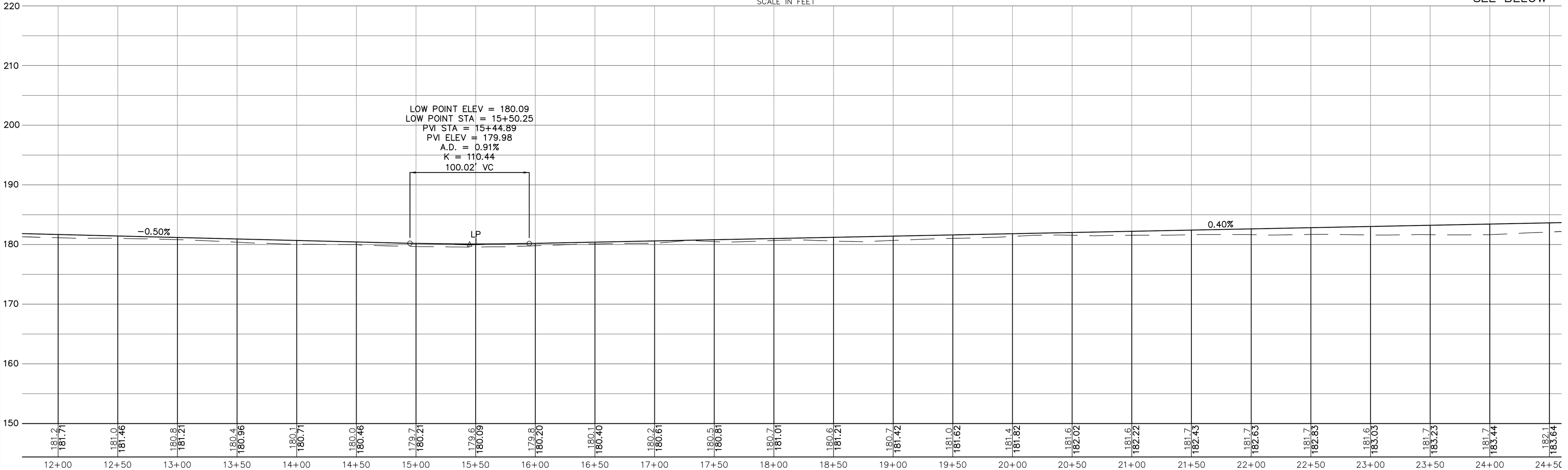

L:\work\101221\CAD\Preliminary ROW\101221 08-13 General Plan and Profile.dwg 10/18/2011 4:43:49 PM EST

STEEL W BEAM HIGHWAY GUARD

WINTER STREET
STA 31+00 TERMINAL END SECTION TO
STA 33+29 (CONNECT TO EXIST.)
GREAT ROAD (RTE 117)
(2) TERMINAL ENDS AT CROSSING

DRAINAGE DETAILS

NONE

WATER SUPPLY ALTERATIONS

NONE

TRAFFIC SIGNAL CONDUIT

NONE

MAYNARD–ACTON
ASSABET RIVER RAIL TRAIL

STATE	FED. AID PROJ. NO.	SHEET NO.	TOTAL SHEETS
MASS.		10	22
PROJECT FILE NO. 604531			

PRELIMINARY RIGHT OF WAY PLANS
PROPERTY PLANS & PROFILES

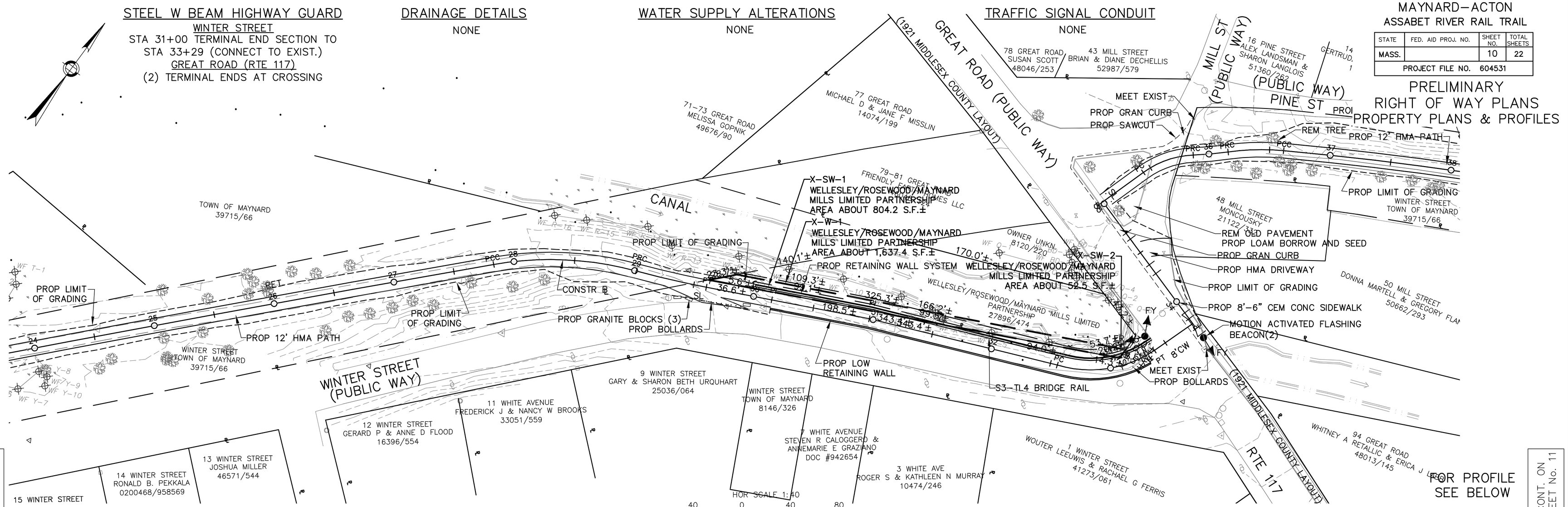

CONT. ON SHEET No. 9

CONT. ON SHEET No. 11

FOR PROFILE SEE BELOW

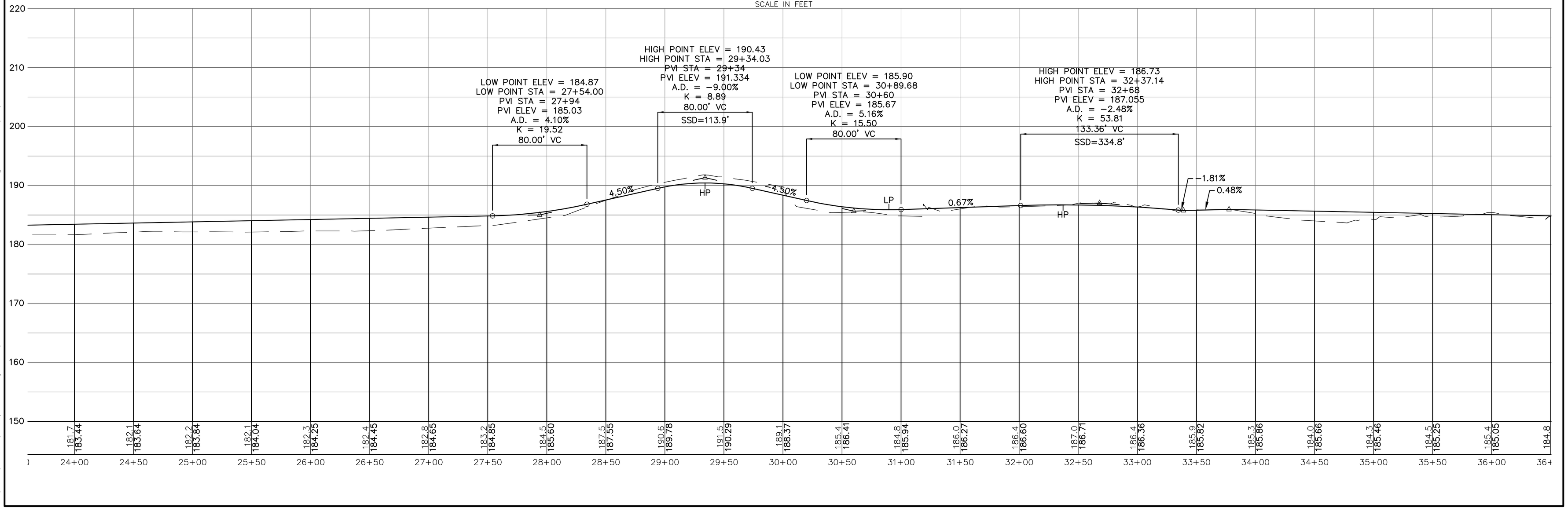

L:\work\101221\CAD\Preliminary ROW\101221 08-13 General Plan and Profile.dwg 10/18/2011 4:43:49 PM EST

STEEL W BEAM HIGHWAY GUARD
NONE

DRAINAGE DETAILS
NONE

WATER SUPPLY ALTERATIONS
NONE

TRAFFIC SIGNAL CONDUIT
NONE

MAYNARD–ACTON
ASSABET RIVER RAIL TRAIL

STATE	FED. AID PROJ. NO.	SHEET NO.	TOTAL SHEETS
MASS.		11	22
PROJECT FILE NO. 604531			

PRELIMINARY
RIGHT OF WAY PLANS
PROPERTY PLANS & PROFILES

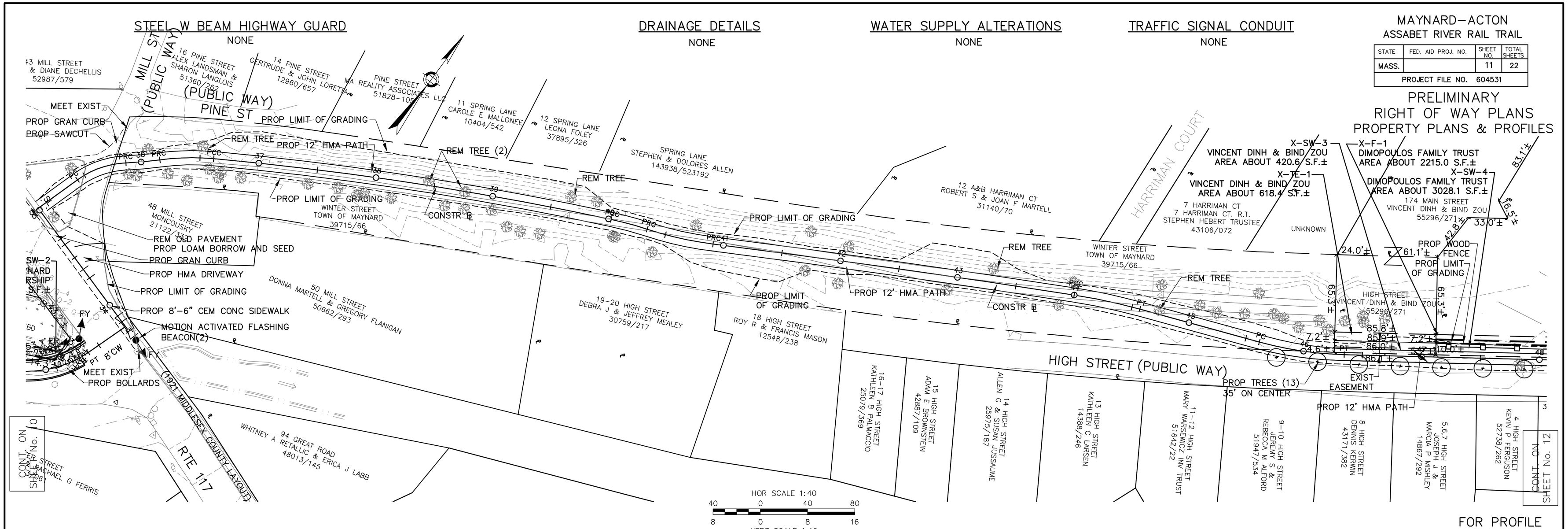

FOR PROFILE SEE BELOW

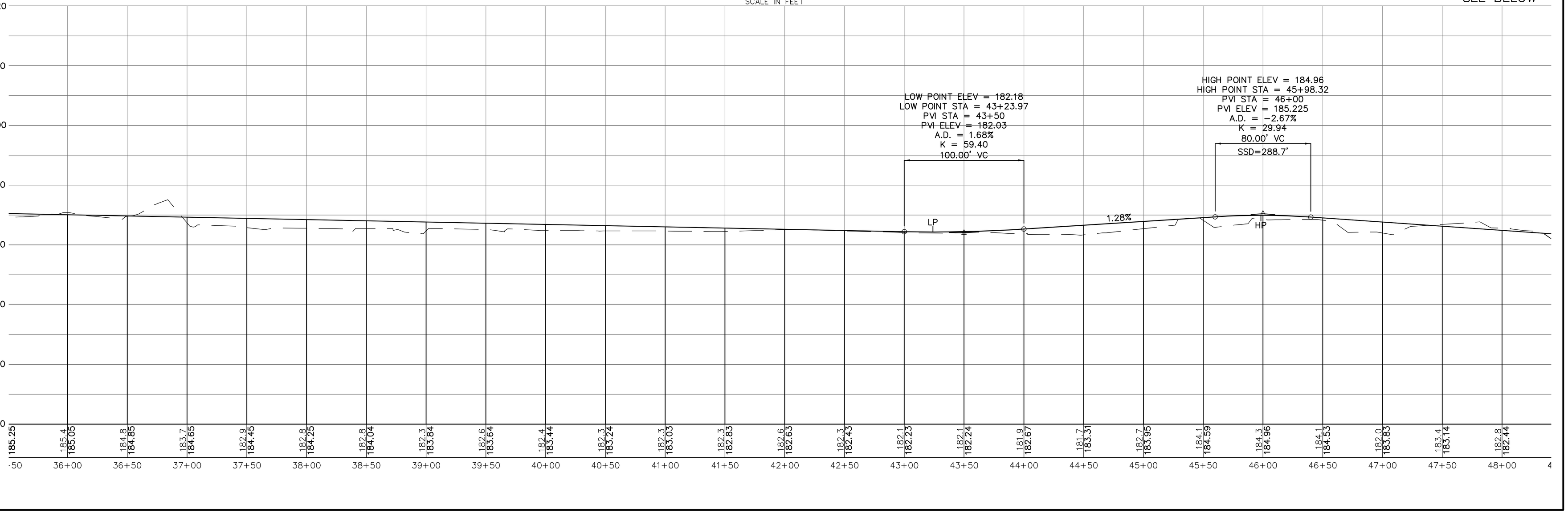

L:\work\101221\CAD\Preliminary ROW\101221 08–13 General Plan and Profile.dwg 10/18/2011 4:43:49 PM EST

STEEL W BEAM HIGHWAY GUARD
NONE

DRAINAGE DETAILS
NONE

WATER SUPPLY ALTERATIONS
NONE

TRAFFIC SIGNAL CONDUIT
NONE

MAYNARD–ACTON
ASSABET RIVER RAIL TRAIL

STATE	FED. AID PROJ. NO.	SHEET NO.	TOTAL SHEETS
MASS.		12	22
PROJECT FILE NO. 604531			

PRELIMINARY RIGHT OF WAY PLANS PROPERTY PLANS & PROFILES

CONT. ON SHEET No. 11

CONT. ON SHEET No. 13

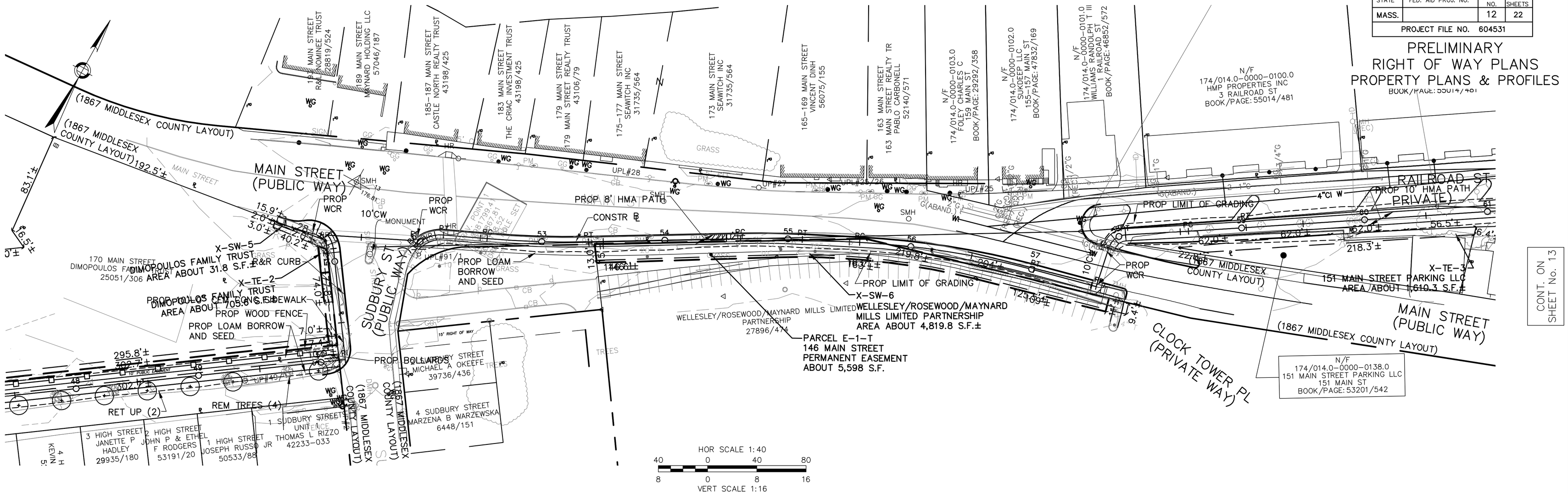

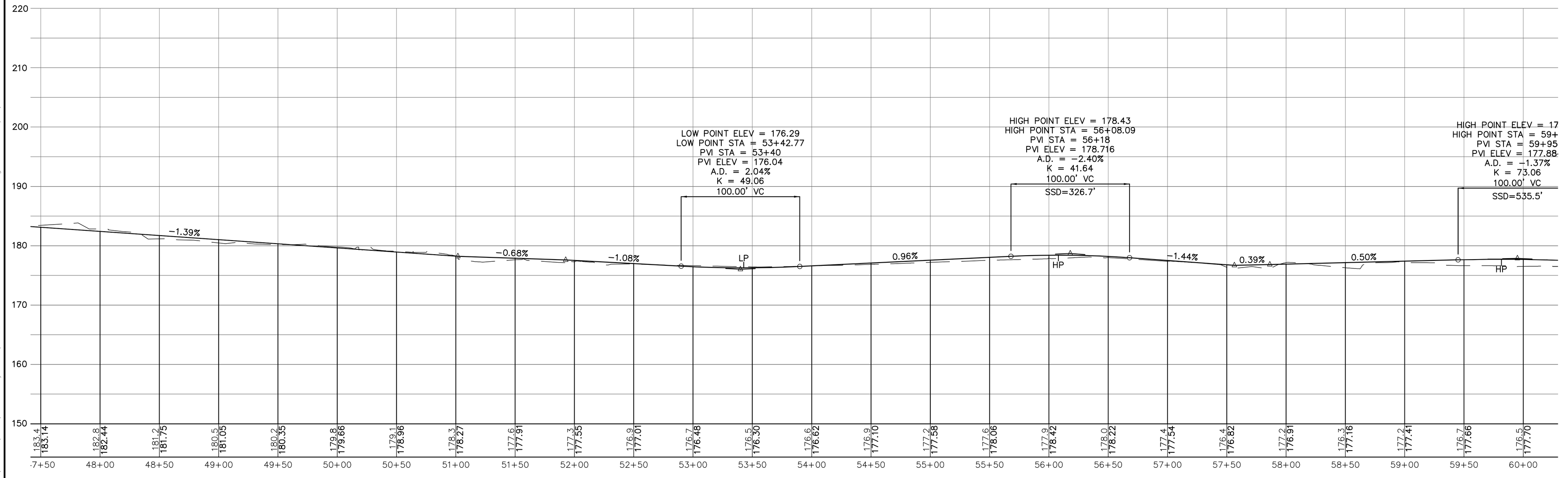

L:\work\101221\CAD\Preliminary ROW\101221 08-13 General Plan and Profile.dwg 10/18/2011 4:43:49 PM EST

STEEL W BEAM HIGHWAY GUARD
NONE

DRAINAGE DETAILS
NONE

WATER SUPPLY ALTERATIONS
NONE

TRAFFIC SIGNAL CONDUIT
NONE

MAYNARD–ACTON
ASSABET RIVER RAIL TRAIL

STATE	FED. AID PROJ. NO.	SHEET NO.	TOTAL SHEETS
MASS.		13	22
PROJECT FILE NO. 604531			

PRELIMINARY RIGHT OF WAY PLANS PROPERTY PLANS & PROFILES

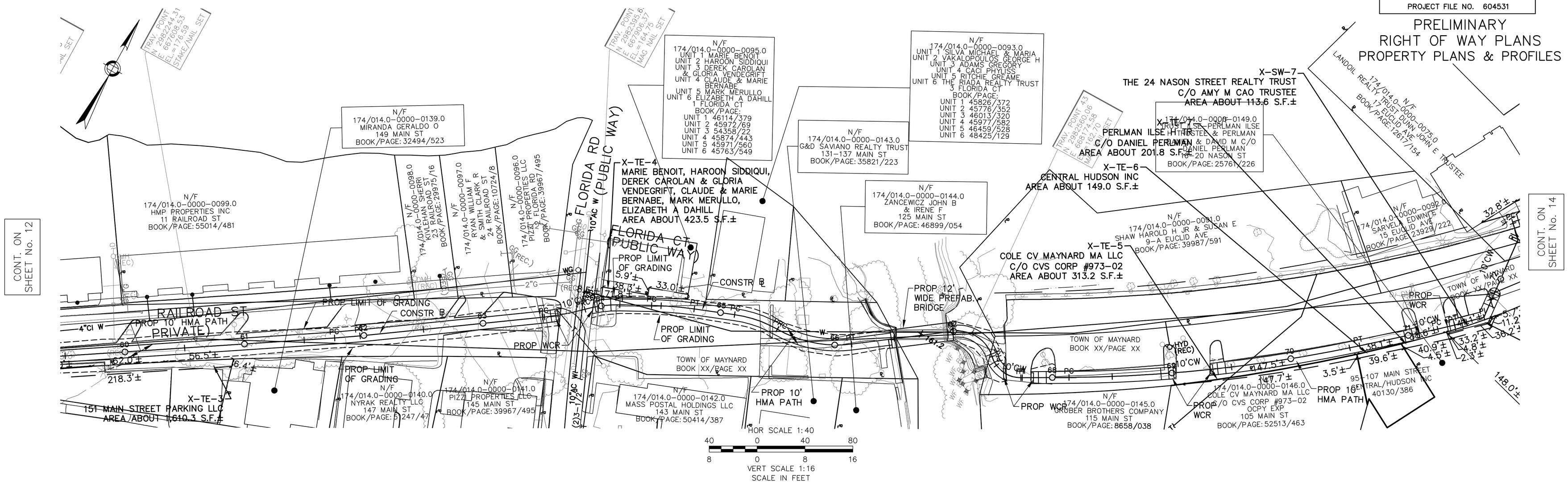

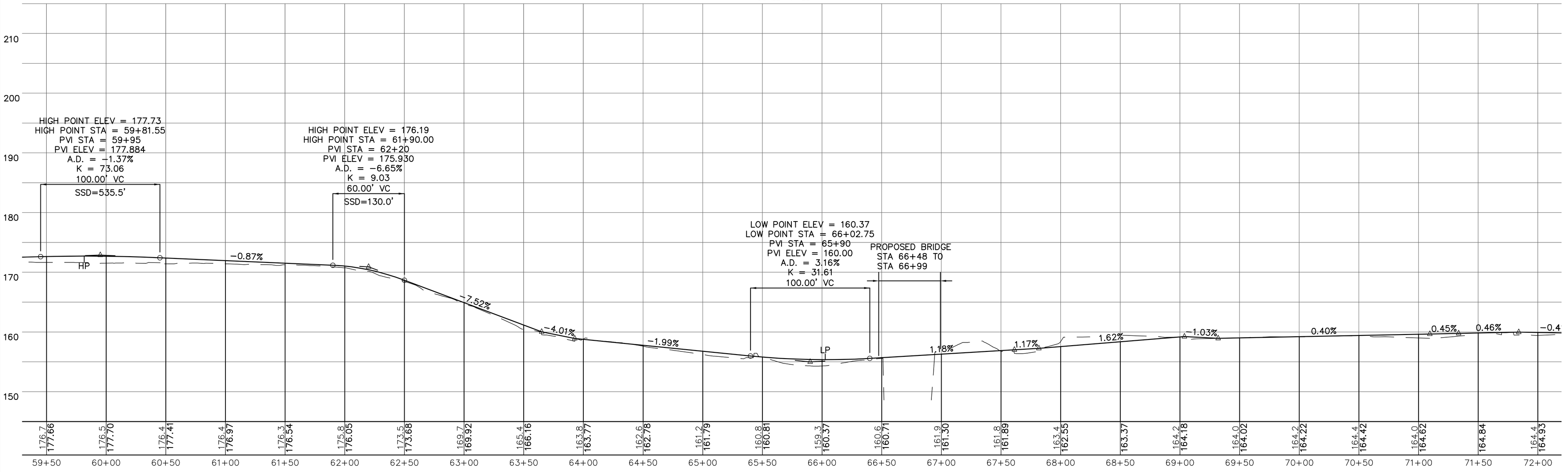

L:\work\101221\CAD\Preliminary ROW\101221 08-13 General Plan and Profile.dwg 10/18/2011 4:43:49 PM EST

STEEL W BEAM HIGHWAY GUARD

NONE

DRAINAGE DETAILS

NONE

WATER SUPPLY ALTERATIONS

NONE

TRAFFIC SIGNAL CONDUIT

NONE

MAYNARD–ACTON
ASSABET RIVER RAIL TRAIL

STATE	FED. AID PROJ. NO.	SHEET NO.	TOTAL SHEETS
MASS.		14	22
PROJECT FILE NO. 604531			

PRELIMINARY
RIGHT OF WAY PLANS
PROPERTY PLANS & PROFILES

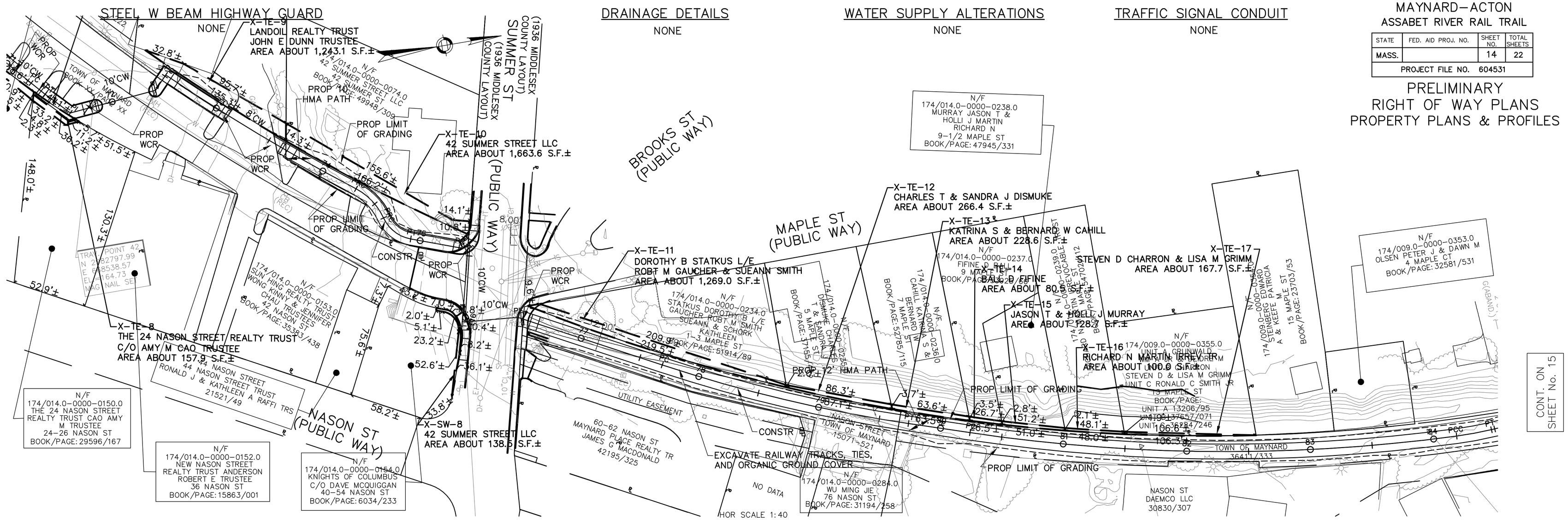

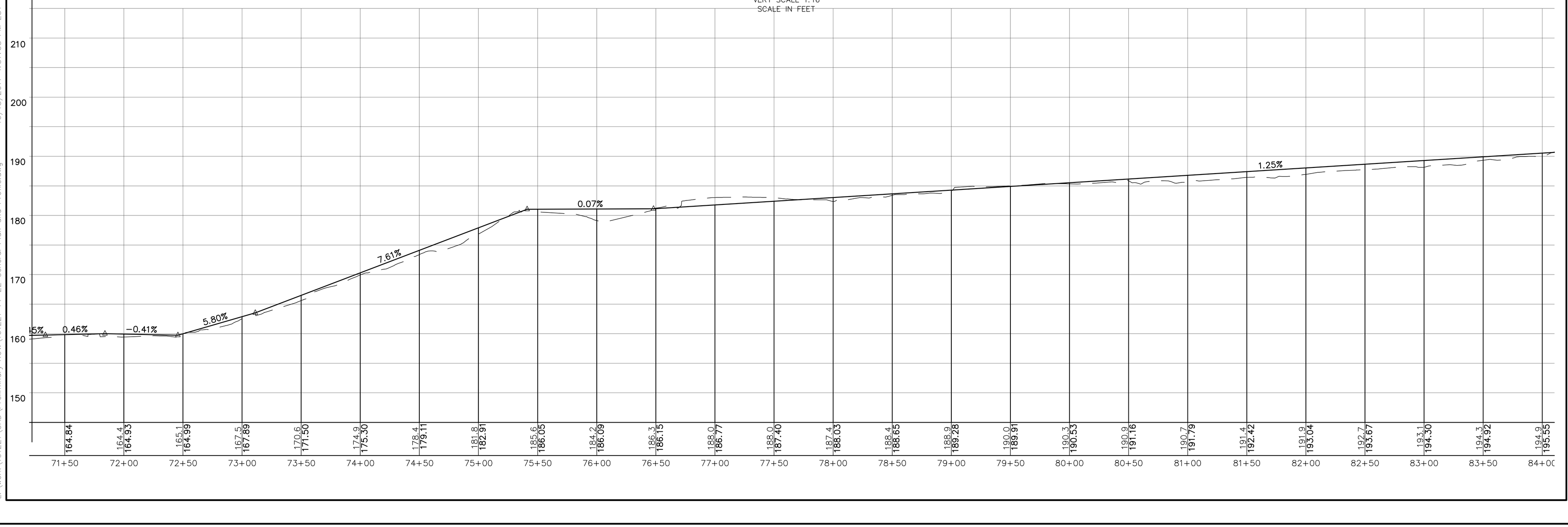

L:\work\101221\CAD\Preliminary ROW\101221 14-22 General Plan and Profile.dwg 10/18/2011 4:37:38 PM EST

STEEL W BEAM HIGHWAY GUARD
NONE

DRAINAGE DETAILS
NONE

WATER SUPPLY ALTERATIONS
NONE

TRAFFIC SIGNAL CONDUIT
NONE

MAYNARD–ACTON
ASSABET RIVER RAIL TRAIL

STATE	FED. AID PROJ. NO.	SHEET NO.	TOTAL SHEETS
MASS.		15	22
PROJECT FILE NO. 604531			

PRELIMINARY RIGHT OF WAY PLANS PROPERTY PLANS & PROFILES

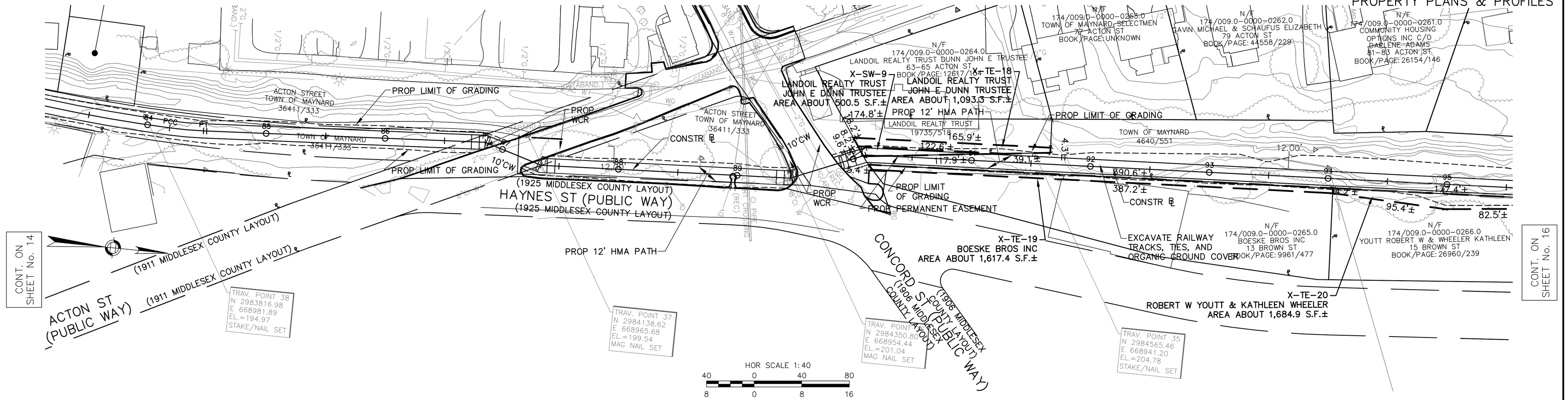

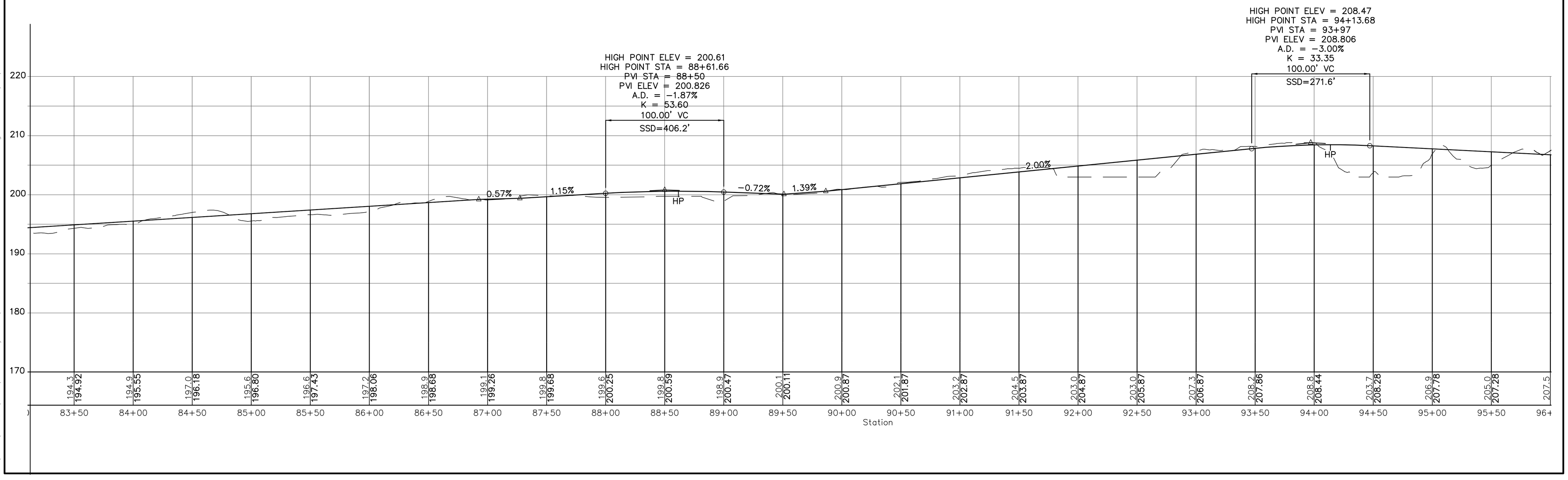

L:\work\101221\CAD\Preliminary ROW\101221 14-22 General Plan and Profile.dwg 10/18/2011 4:37:38 PM EST

STEEL W BEAM HIGHWAY GUARD
NONE

DRAINAGE DETAILS
NONE

WATER SUPPLY ALTERATIONS
NONE

TRAFFIC SIGNAL CONDUIT
NONE

MAYNARD–ACTON
ASSABET RIVER RAIL TRAIL

STATE	FED. AID PROJ. NO.	SHEET NO.	TOTAL SHEETS
MASS.		16	22
PROJECT FILE NO. 604531			

PRELIMINARY RIGHT OF WAY PLANS PROPERTY PLANS & PROFILES

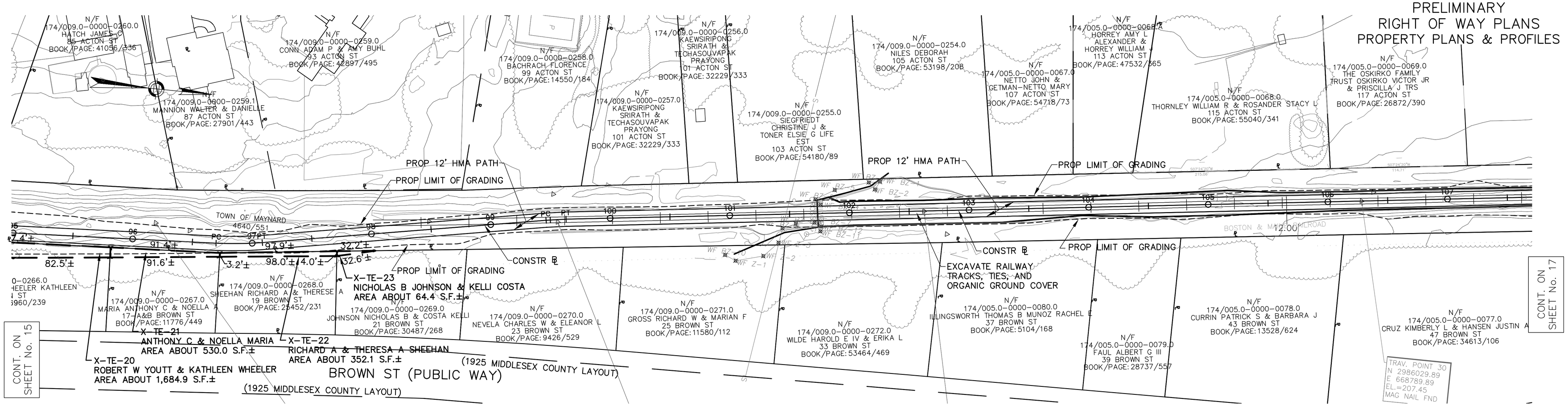

HOR SCALE 1:40
40 0 40 80
8 0 8 16
VERT SCALE 1:16
SCALE IN FEET

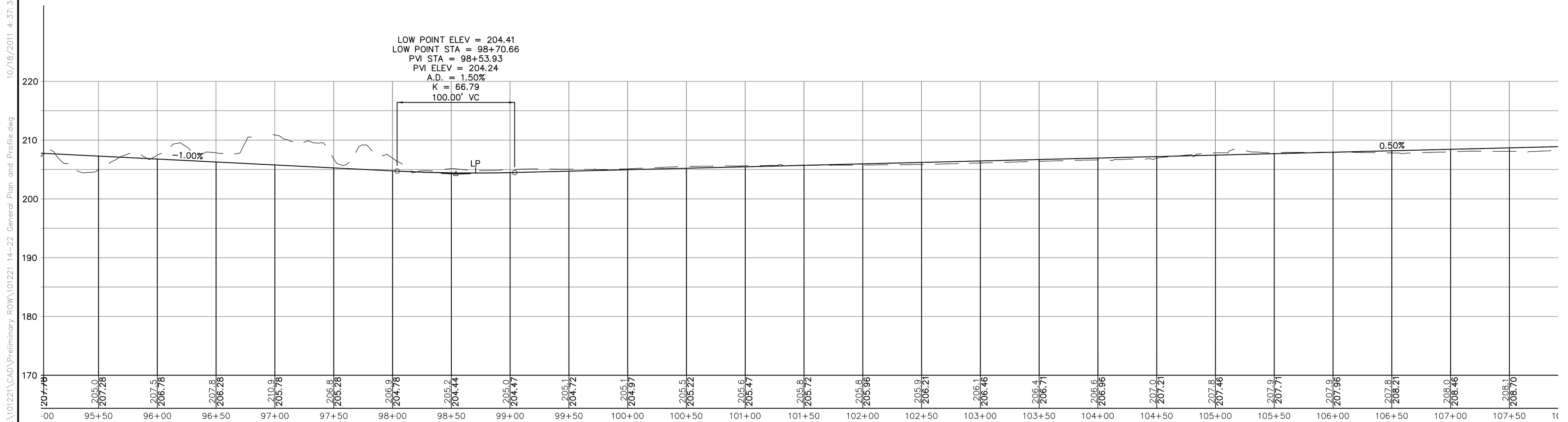

L:\work\101221\CAD\Preliminary ROW\101221 14-22 General Plan and Profile.dwg 10/18/2011 4:37:38 PM EST

STEEL W BEAM HIGHWAY GUARD
NONE

DRAINAGE DETAILS
NONE

WATER SUPPLY ALTERATIONS
NONE

TRAFFIC SIGNAL CONDUIT
NONE

MAYNARD–ACTON
ASSABET RIVER RAIL TRAIL

STATE	FED. AID PROJ. NO.	SHEET NO.	TOTAL SHEETS
MASS.		17	22
PROJECT FILE NO. 604531			

PRELIMINARY
RIGHT OF WAY PLANS
PROPERTY PLANS & PROFILES

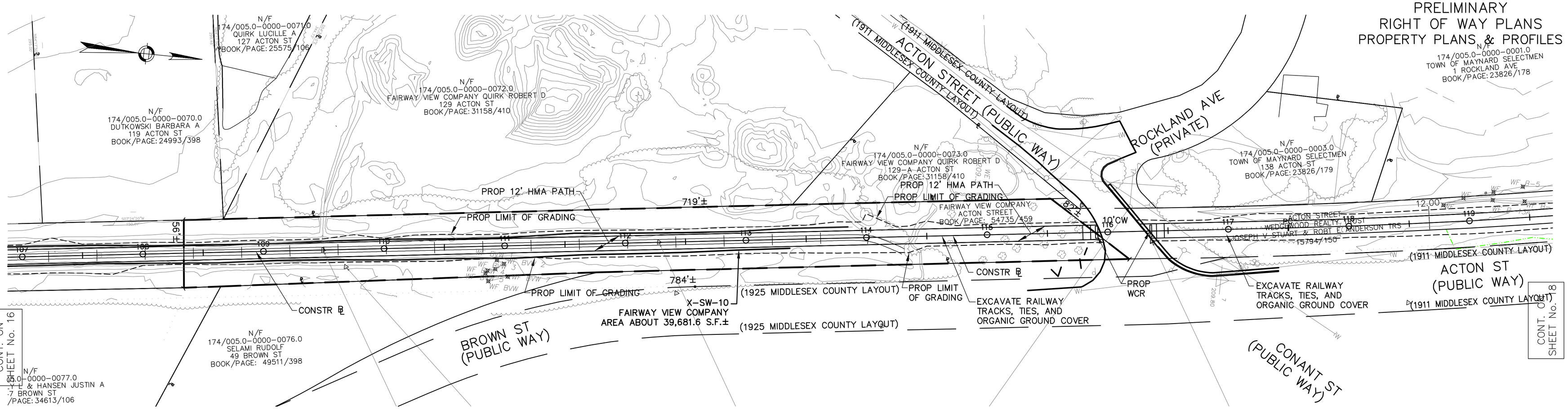

HOR SCALE 1:40
40 0 40 80
8 0 8 16
VERT SCALE 1:16
SCALE IN FEET

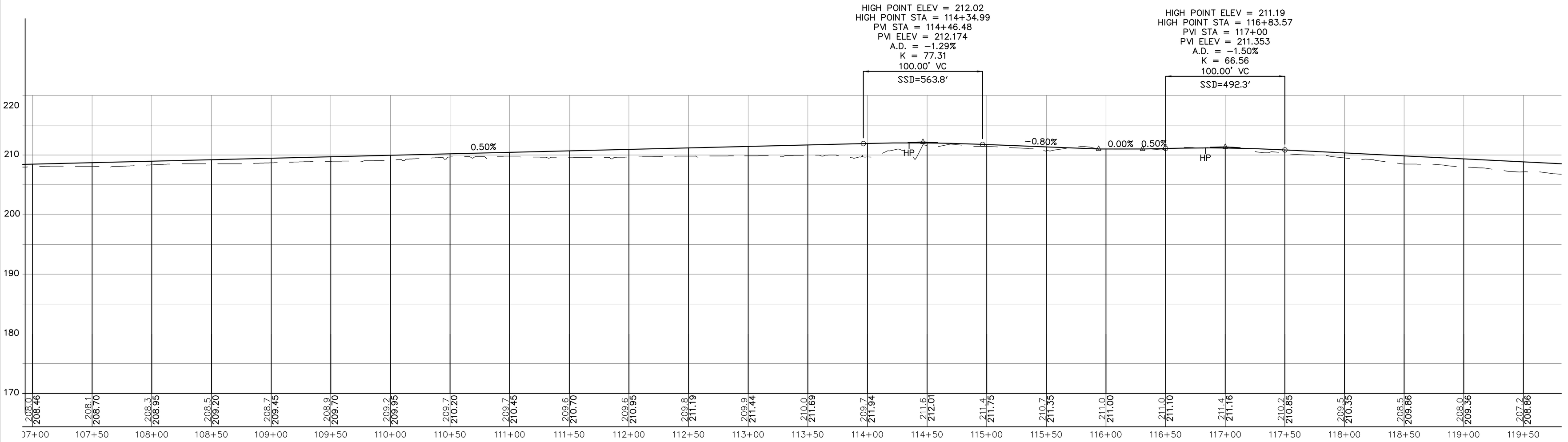

L:\work\101221\CAD\Preliminary ROW\101221 14–22 General Plan and Profile.dwg 10/18/2011 4:37:38 PM EST

L:\work\101221\CAD\Preliminary ROW\101221 14-22 General Plan and Profile.dwg 10/18/2011 4:37:38 PM EST

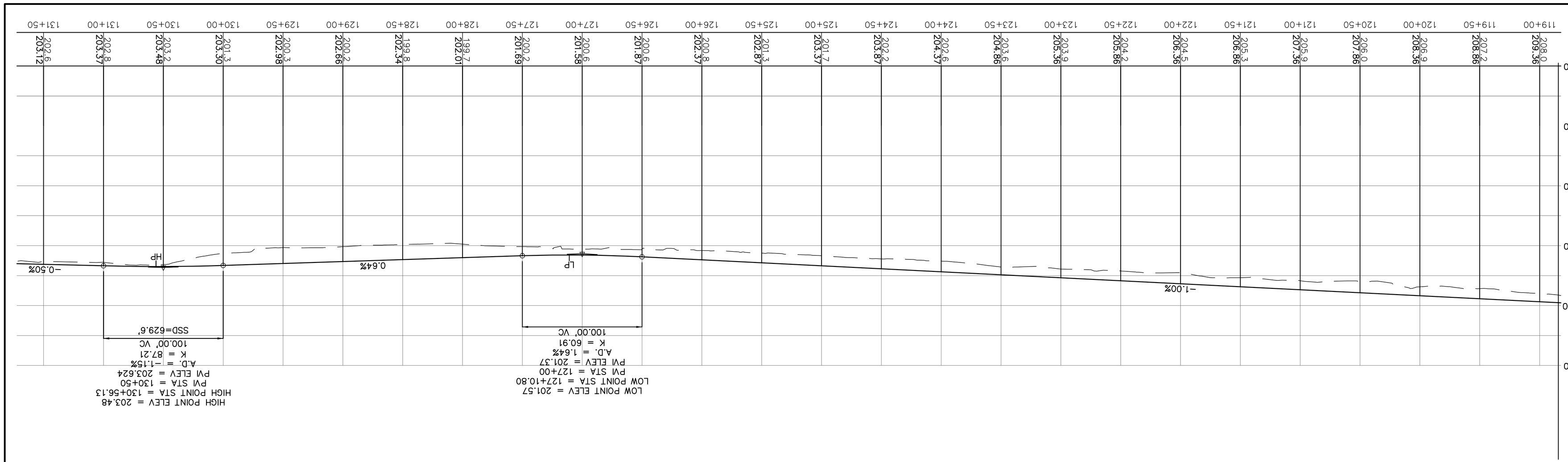

HOR SCALE 1:40
VERT SCALE 1:16
SCALE IN FEET

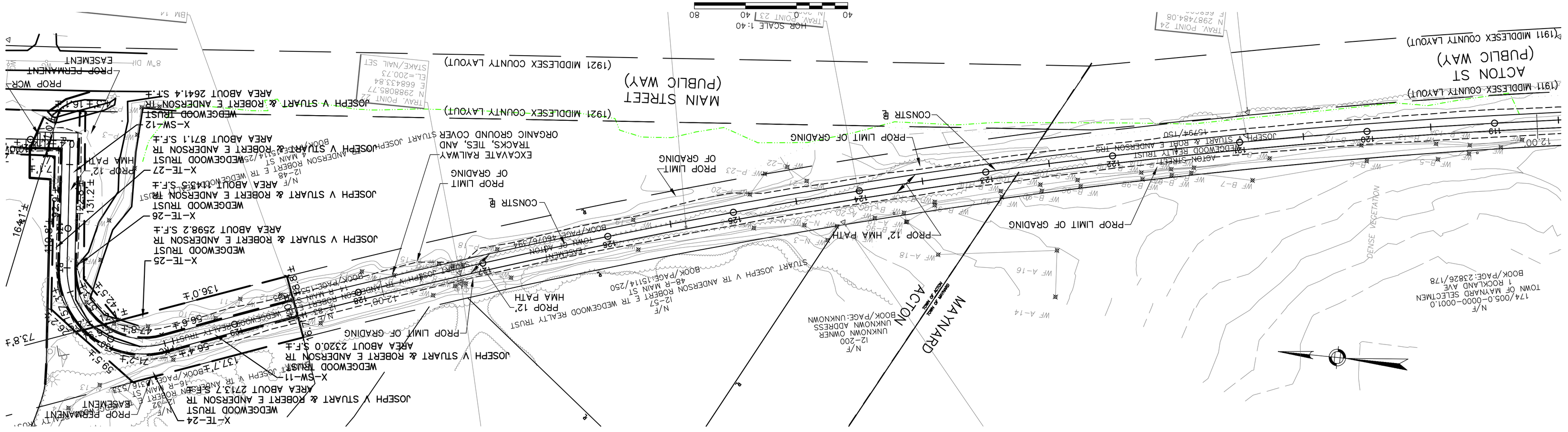

PRELIMINARY
RIGHT OF WAY PLANS
PROPERTY PLANS & PROFILES

MAYNARD–ACTON
ASSABET RIVER RAIL TRAIL

PROJECT FILE NO. 604531			
STATE	FED. AID PROJ. NO.	SHEET NO.	TOTAL SHEETS
MASS.		18	22

STEEL W BEAM HIGHWAY GUARD
NONE

DRAINAGE DETAILS
NONE

WATER SUPPLY ALTERATIONS
NONE

TRAFFIC SIGNAL CONDUIT
NONE

STEEL W BEAM HIGHWAY GUARD

NONE

DRAINAGE DETAILS

NONE

WATER SUPPLY ALTERATIONS

NONE

TRAFFIC SIGNAL CONDUIT

NONE

MAYNARD–ACTON
ASSABET RIVER RAIL TRAIL

STATE	FED. AID PROJ. NO.	SHEET NO.	TOTAL SHEETS
MASS.		19	22
PROJECT FILE NO. 604531			

PRELIMINARY RIGHT OF WAY PLANS PROPERTY PLANS & PROFILES

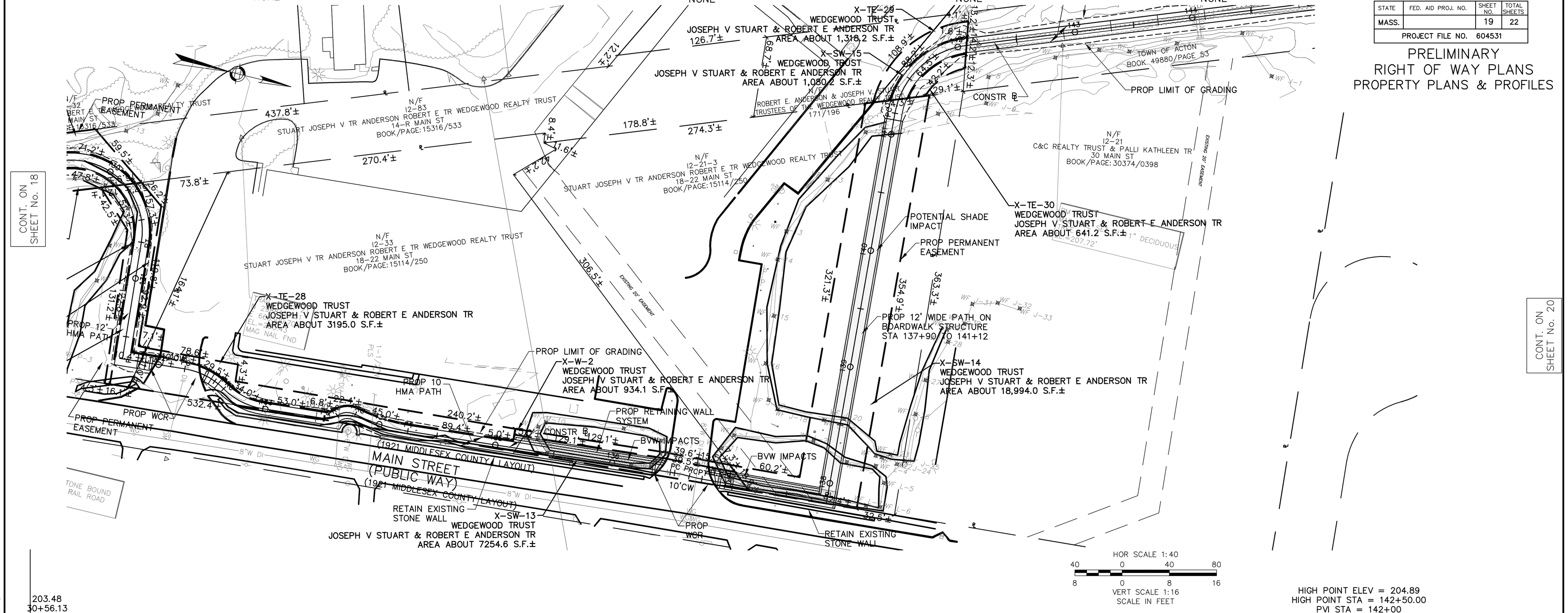

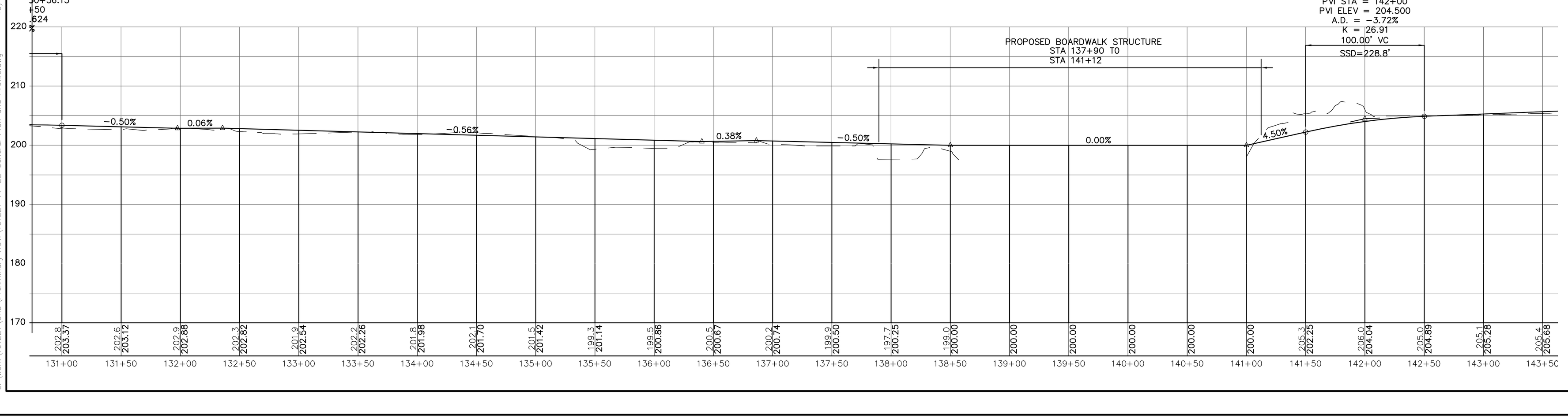

L:\work\101221\CAD\Preliminary ROW\101221 14-22 General Plan and Profile.dwg 10/18/2011 4:37:38 PM EST

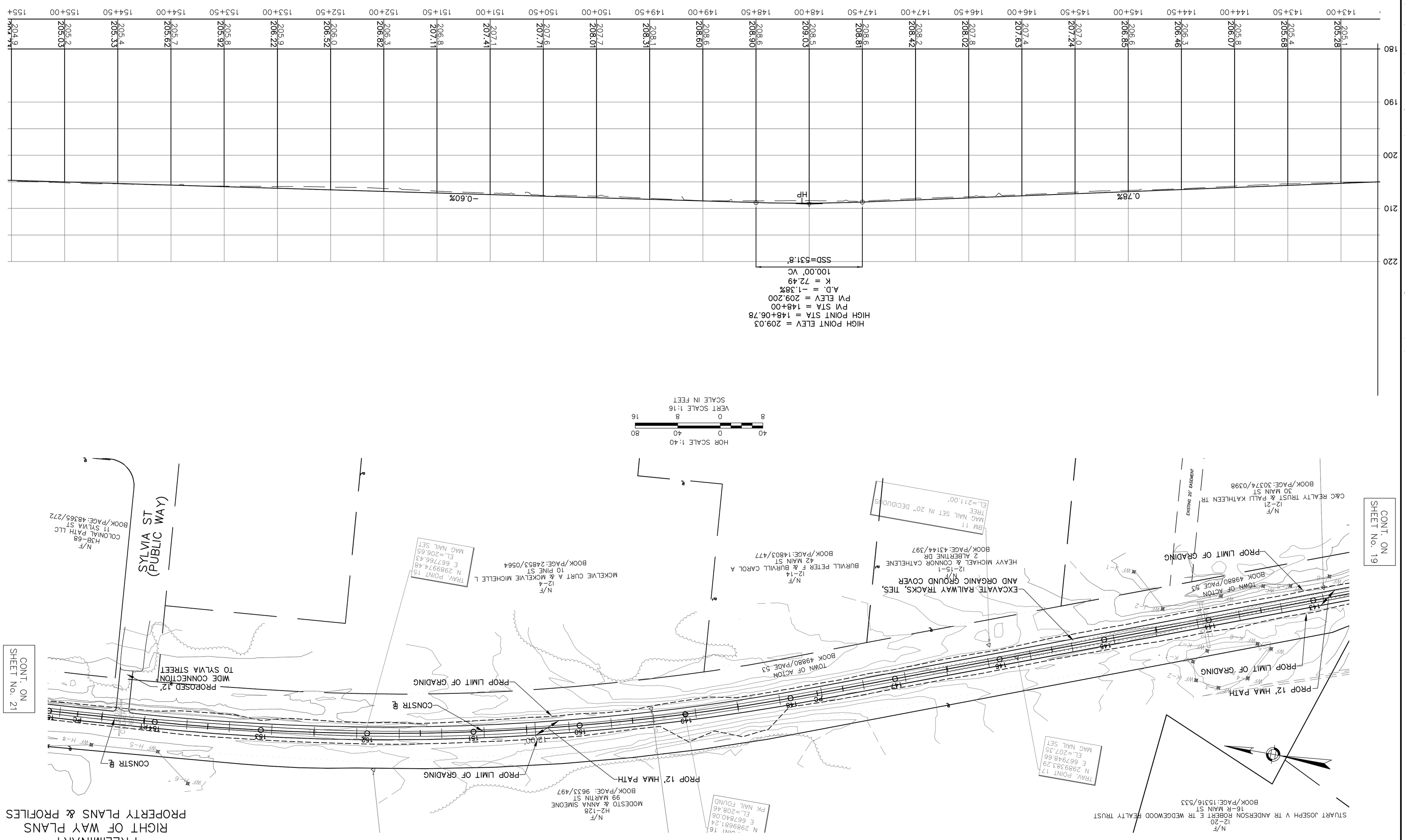

PRELIMINARY
RIGHT OF WAY PLANS
PROPERTY PLANS & PROFILES

MAYNARD–ACTON
ASSABET RIVER RAIL TRAIL

STATE	FED. AID PROJ. NO.	SHEET NO.	TOTAL SHEETS
MASS.		20	22

PROJECT FILE NO. 604531

STEEL W BEAM HIGHWAY GUARD
NONE

DRAINAGE DETAILS
NONE

WATER SUPPLY ALTERATIONS
NONE

TRAFFIC SIGNAL CONDUIT
NONE

L:\work\101221\CAD\Preliminary ROW\101221 14-22 General Plan and Profile.dwg 10/18/2011 4:37:38 PM EST

STEEL W BEAM HIGHWAY GUARD
NONE

DRAINAGE DETAILS
NONE

WATER SUPPLY ALTERATIONS
NONE

TRAFFIC SIGNAL CONDUIT
NONE

MAYNARD–ACTON
ASSABET RIVER RAIL TRAIL

STATE	FED. AID PROJ. NO.	SHEET NO.	TOTAL SHEETS
MASS.		21	22
PROJECT FILE NO. 604531			

PRELIMINARY
RIGHT OF WAY PLANS
PROPERTY PLANS & PROFILES

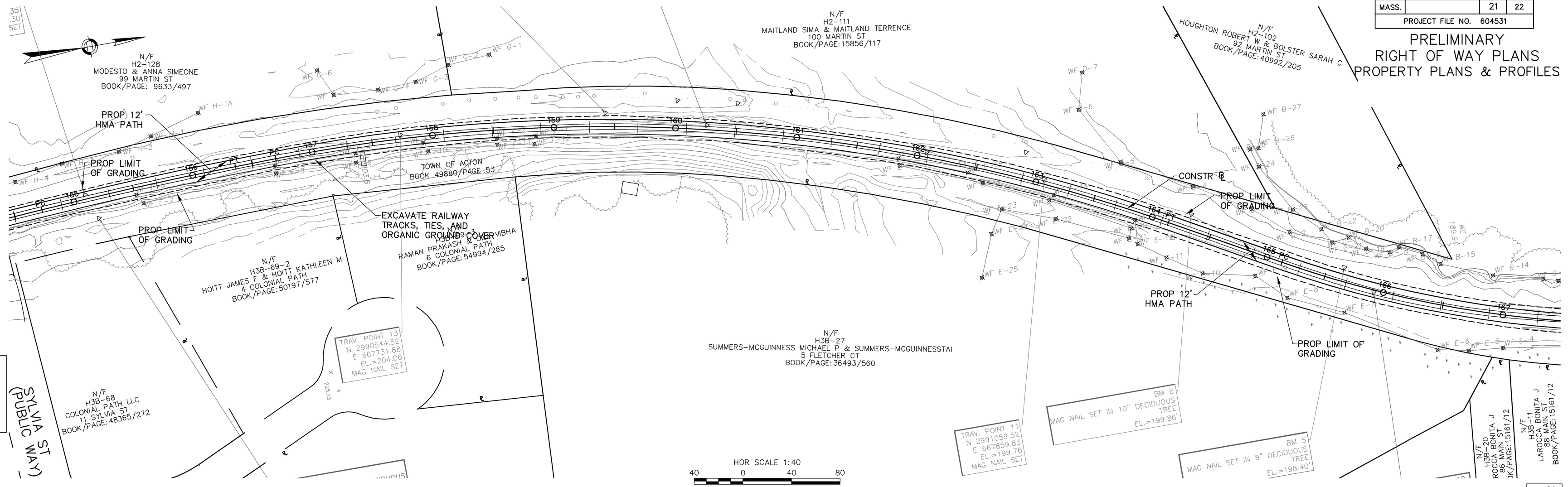

HOR SCALE 1:40
40 0 40 80
8 0 8 16
VERT SCALE 1:16
SCALE IN FEET

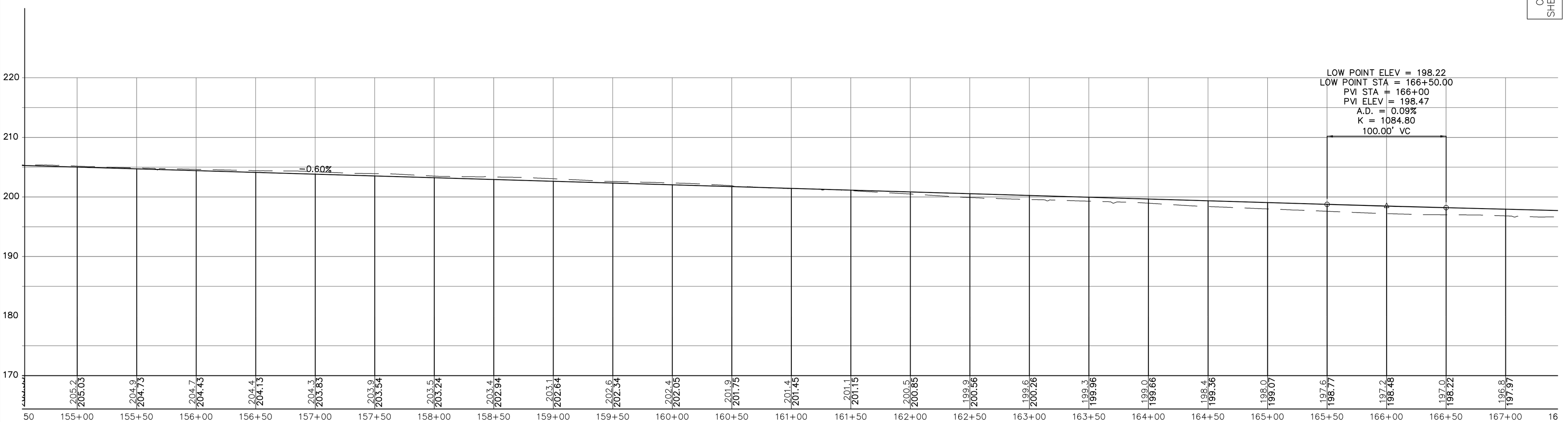

L:\work\10122\1\CAD\Preliminary ROW\101221 14–22 General Plan and Profile.dwg 10/18/2011 4:37:38 PM EST

STEEL W BEAM HIGHWAY GUARD
NONE

DRAINAGE DETAILS
NONE

WATER SUPPLY ALTERATIONS
NONE

TRAFFIC SIGNAL CONDUIT
NONE

MAYNARD–ACTON
ASSABET RIVER RAIL TRAIL

STATE	FED. AID PROJ. NO.	SHEET NO.	TOTAL SHEETS
MASS.		22	22
PROJECT FILE NO. 604531			

PRELIMINARY RIGHT OF WAY PLANS PROPERTY PLANS & PROFILES

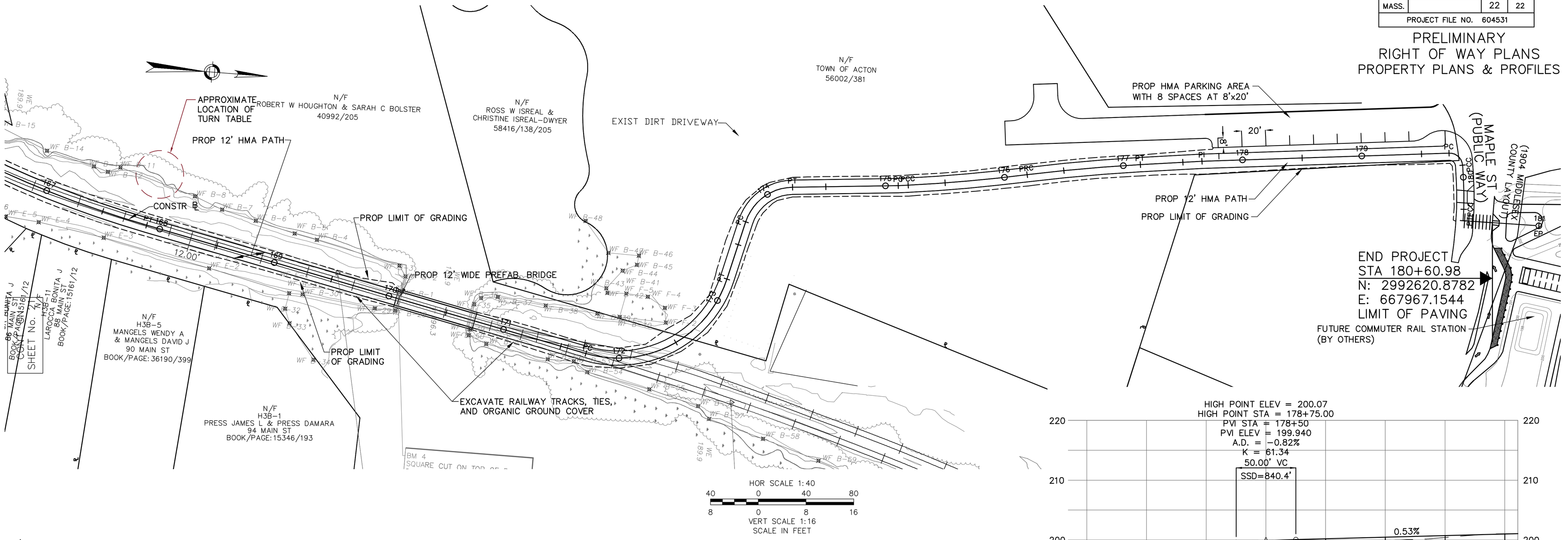

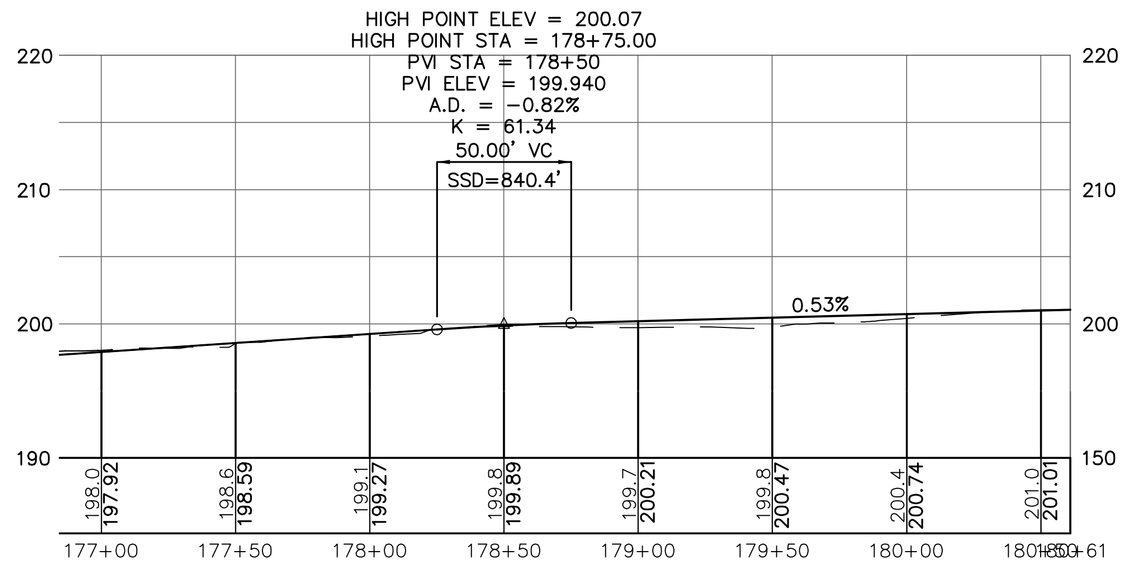

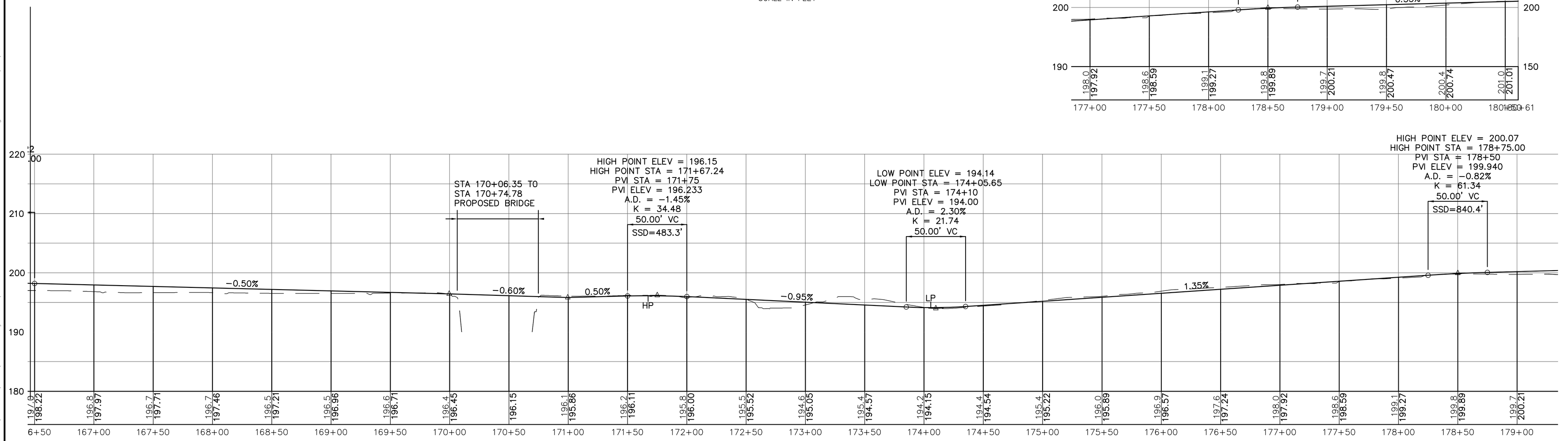

L:\work\101221\CAD\Preliminary ROW\101221 14-22 General Plan and Profile.dwg 10/18/2011 4:37:38 PM EST