TECHNICAL MEMORANDUM

FOR

ASSABET RIVER RAIL TRAIL STRUCTURES

INTRODUCTION

The following presents a summary of alternative structure type concepts with budgetary costs to be considered for the Mill Pond Bridge, Boardwalk, and downtown Maynard structures. Upon review and acceptance the selected alternatives each location can be advanced for further Sketch Plan development. Please note all costs shown below are 2011 dollars for just the structure and installation.

MILL POND BRIDGE

EXISTING CONDITIONS

The existing Mill Pond Railroad bridge in Acton, Mass is a five span, wooden trestle structure. The ballast and rails are still intact. The water is approximately 10' below the superstructure. The piles visible above the waterline appear to be in good condition. Access to the structure would be through the recently Town acquired farm property along the proposed trail ROW.

Consideration was made for utilization of the existing substructure with replacement of the upper ties with a new decking system. Although this is a viable option, it is unlikely that alternative would be accepted by the MassDOT without additional testing of soil, potential scour assessment and condition assessment of timber piles below the waterline. Therefore the approach that is supported by the Town is that a new prefabricated structure will be utilized spanning from behind the existing abutments. Soil testing will be required to assess the foundation requirements. The existing timber bents will be left in place, but will not provide any structural capacity.

The new superstructure will be approximately 70' long and designed to handle a 10,000 lb load for emergency vehicle access. Alternately bollards could be used to block any vehicle access onto the structure. Two options for prefabricated structures were considered; Alt 1 a traditional steel truss structure and Alt 2 a Fiber reinforced Polymer Structure.

PROPOSED STRUCTURE ALTERNATIVES

Alternate1 considers a Prefabricated Steel Truss Bridge with a pressure treated wood deck (1a) or an IPE (tropical hardwood) deck (1b). The steel superstructure will be of a significantly heavier load and will be delivered in one piece. The foundation requirements will be greater for the heavier load. The superstructure would be weathering steel. Access to the site will be along the trail ROW through the farm property recently acquired by the Town. MassDOT has new restrictions on pressure treated timber used for the deck and there is an environmental concern of the treatment leaching into the water. The estimated cost of the steel structure including installation would be approximately $134,000 with the pressure treated timber deck (Alt 1a) and $149,000 with the IPE deck option (1b).

Alternative 2 considers a Fiber Reinforced Polymer (FRP) bridge with various deck options . The FRP structure has the advantage of lower dead load and therefore lighter foundation loads. The components are also delivered to the field in segments of approximately 250 lbs which can then be easily transported by minimally invasive methods. See attachment A. The deck material will also affect the estimated cost. The treated timber decking (Alt 2a) is the lowest estimated cost at $152,600 delivered. A 100% recycled plastic decking (Alt2b) is an option that is estimated to be $192,200 delivered. A FRP composite deck (Alt 2c) is estimated to be $202,900 delivered. Foundation cost is estimated at $30,000 for the FRP alternate. Installation costs are estimated at $10,000 for any alternate.

The total estimated costs of the 3 Alternates would be 2a $192,600,2b $232,000 and 2c $242,900.

BOARDWALK

PROPOSED STRUCTURE

The Boardwalk at Sta 238+20 to Sta242+20 will provide access through a wetland environment. It is important to minimize construction impacts in this area. The boardwalk will be designed for only pedestrian loading as the access to the boardwalk would not require an emergency vehicle to drive on it and will be restricted by permanent bollards. The boardwalk will be an elevated structure supported by helical anchor piles. See attachment B. These anchors are installed with minimum impact to the wetlands and spaced approximately 8' transversely and 10-12' longitudinally. This approach was discussed with the Town and Conservation Officials in the past and met with support. The boardwalk can be constructed of pressure treated timber or FRP framework with various decking materials, including plastic, or a concrete alternate with planks formed and stained to look like timber. See Attachment C. Either of the non wood alternates would be close to maintenance free and no concern about chemicals from the pressure treated wood, leaching into the wetland.

Assuming an approximate 400' length the FRP framing alternative with PTW deck would have an estimated cost of approximately $314,000. The precast concrete alternative would have an estimated cost of approximately $260,000 and the all PTW alternative would have an estimated cost of approximately $400,000.

DOWNTOWN MAYNARD BRIDGE

EXISTING CONDITIONS

The existing Downtown Maynard pedestrian bridge is a single span crossing of the Assabet River. It is a prefabricated timber structure that is only 6.5 feet wide and cannot adequately support two way rail trail traffic.

The span is 50 feet supported by large granite block walls that define the Assabet River.

The new superstructure will be designed to handle a 10,000 lb load for emergency vehicle access. Or bollards could be used to block any vehicle access onto the structure. Two options for prefabricated structures were considered; Alt 1 traditional steel truss structure and Alt 2 a Fiber reinforced Polymer Structure.

PROPOSED STRUCTURE ALTERNATIVES

Alternate1 considers a Prefabricated Steel Truss Bridge with a pressure treated wood deck (1a) or an IPE (tropical hardwood) deck(1b). The steel superstructure will be of a significantly heavier load and will be delivered in one piece. The foundation is assumed to be adequate for this load and only modifications to the bearing area will be required. The superstructure would be weathering steel. Access to the site will be through the parking lot behind Nason St. MassDOT has new restrictions on the pressure treated timber used for the deck and there is an environmental concern of the treatment leaching into the water. The estimated cost of the steel structure including installation would be approximately $80,000 with the pressure treated timber deck (Alt 1a) and $92,000 with the IPE deck option (1b).

Alternative 2 considers a Fiber Reinforced Polymer (FRP) bridge with various deck options . The FRP structure has the advantage of lower dead load and therefore lighter foundation loads. The foundation is assumed to be adequate for this load and only modifications to the bearing area will be required. The components are also delivered to the field in segments of approximately 250 lbs which can then be easily transported by minimally invasive methods. See attachment A. The deck material will also affect the estimated cost. The treated timber decking (Alt 2a) is the lowest estimated cost at $110,000 delivered. A 100% recycled plastic decking (Alt2b) is an option that would is estimated to be $138,000 delivered. A FRP composite deck (Alt 2c) is estimated to be $145,000 delivered. Foundation cost is estimated at $8,000 for the FRP alternate.

The total estimated costs of the 3 Alternates would be 2a $128,000,2b $250,000 and 2c $260,000.

Mill Pond Bridge Alternatives

Attachment A

Fiberglass Bridge

Installation Procedures

Fiberglass bridges from E.T. Techtonics can be assembled and installed in a variety of ways depending on the difficulty of your site. Spans can be shipped to you:

Fully Assembled | Partially Assembled | In Component Parts

Fully Assembled: The span will be delivered to the nearest point accessible by truck. While a small crane (or helicopter) will be needed to unload, the lighter weight of PRESTEK spans means smaller lifting equipment can be used. In most cases, decking will be shipped loose to minimize lifting weight. Depending on location, shipping cost will be higher. Not for volunteers.

Partially Assembled: Individual trusses are assembled, but all connecting crosspieces, bracing, and deck are shipped loose. This saves assembly time on site, but more helpers are needed to unload and move the trusses. Carts can sometimes be used to roll the trusses to the job site. Not suitable for moving long distances or over rough terrain.

In Component Parts: This is our most common form of shipment. Components can be unloaded by as few as 2 workers, usually at the trail head or a nearby staging area. Because no equipment is required to unload, bridge arrival does not need to be coordinated with the bridge assembly. When you are ready for assembly, volunteers or park crews carry the components to the bridge site. No site is too remote. We often have components carried several miles or more on park trails. Once everything is at the bridge site, the bridge is easily assembled using standard hand tools. Depending on span length, bridges can be installed by park maintenance crews, volunteers, or local contractors. Short spans up to 40’ can usually be built by as few as two or three workers, in less than a day.

Boardwalk

Attachment B

Helical Anchor Piles

CHANCE®

A CASE HISTORY

WALKWAY ANCHORING REPORT

Project:
Boardwalk at Huntley Meadows, Fairfax County, Virginia

Design Engineer:
TAMS Consultants

General Contractor:
Avon Corporation

Underpinning Contractor:
Levelift Systems, Inc.
Rockville, MD

Job Description:
A 1½-mile boardwalk was constructed at a wetlands site for the Fairfax County (VA) Park Authority. No wheel or track vehicles were allowed into the wetlands

Levelift Systems, Inc., a Chance distributor, supplied the INSTANT FOUNDATION™ System anchors, technical assistance and hand-transportable installation equipment to Avon Corp.

Testing:
Compression-load tests were performed on three INSTANT FOUNDATION anchors in different areas of the project to verify the torque-to-holding-capacity criteria.

Procedures:
Avon installed the anchors working off specially designed floats.

The INSTANT FOUNDATION anchors (Type SS5 — ¼"-square solid-steel shaft, 10"-dia. helix, hot-dip galvanized) were installed to 7- and 10-ft. depths with average above-grade reveal of 1 to 2 ft. Maximum reveal was 4½ ft.

The anchors were driven to torque of 800 to 1,000 ft.-lb. to provide ultimate capacity of 8 to 10 kips per anchor. Design load varied from 3 to 5 kips.

More than 600 INSTANT FOUNDATION anchors were installed in this project. The anchors were installed in pairs 4 ft. apart on 10-ft. centers along the trail. A bracket fabricated by the Chance Co. was slipped onto the anchor shaft to accept a 6-ft.-long crossbeam (4" x 10").

Metal framing brackets were nailed to the crossbeam and 10-ft.-long 2 x 10s were nailed to them. Then 2 x 6s were nailed across to provide the boardwalk surface. The project took six months to complete.

HUBBELL® POWER SYSTEMS, INC.
CHANCE®
210 North Allen Street
Centralia, MO 65240 USA
Phone: 573-682-8414
Fax: 573-682-8660
www.hubbell.com/abchance

NOTE: Because Hubbell has a policy of continuous product improvement, we reserve the right to change design and specifications without notice.

©2000 Hubbell/Chance
Printed in USA

ISO 9001-1994
Cert. No. 001136
A. B. Chance Co.
Centralia, MO USA

Bulletin 01-9308
Rev. 5/00

Boardwalk

Attachment C

Plastic or Concrete Deck Alternatives

TECHNICAL INFORMATION

Technical & General Specifications

PermaTrak™
NORTH AMERICA

Precast concrete boardwalk system

TECHNICAL SPECIFICATIONS

Precast Boardwalk System

STANDARD COMPONENTS	
Treads:	Standard Widths: 3′-9″, 7′-6″, 11′-3″ Thickness: 4″ and 5 ½″ Color and texture options available
Beams:	Lengths: 6′-8″ to 10′-0″
Abutments:	Width: 3′-9″
Piers:	Precast piers consist of precast base, riser and cap. The heights of each component are 6″ nominal. Additional risers are stacked on each other to increase pier heights. Caps are the bearing elements for the precast beams and are connected via "mushroom shaped" urethane pins.

Standard Components

The reinforced concrete treads of the PermaTrak™ precast boardwalk system lock together via tongue and groove connections on both sides. This prevents treads from being removed after installation.

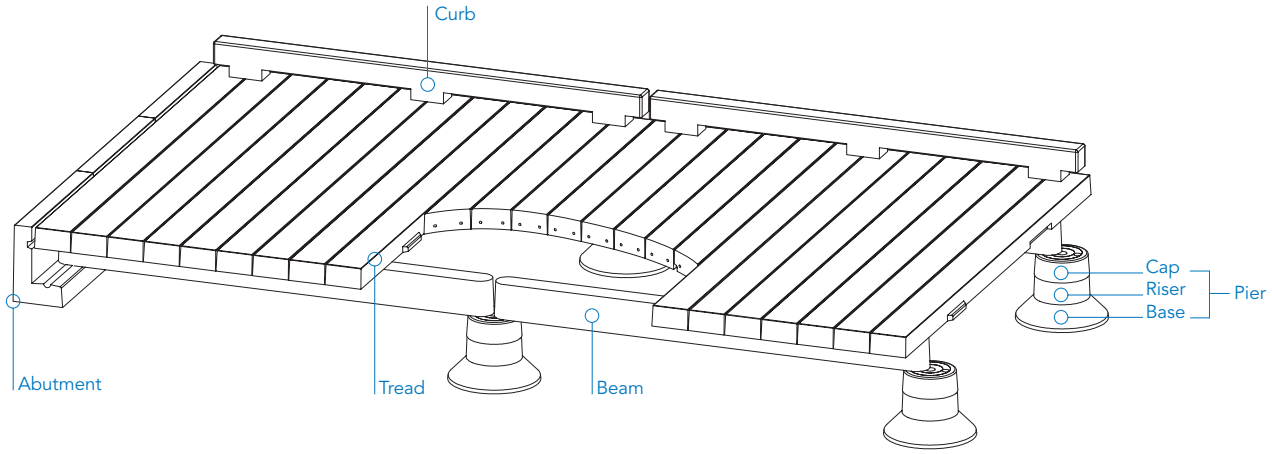

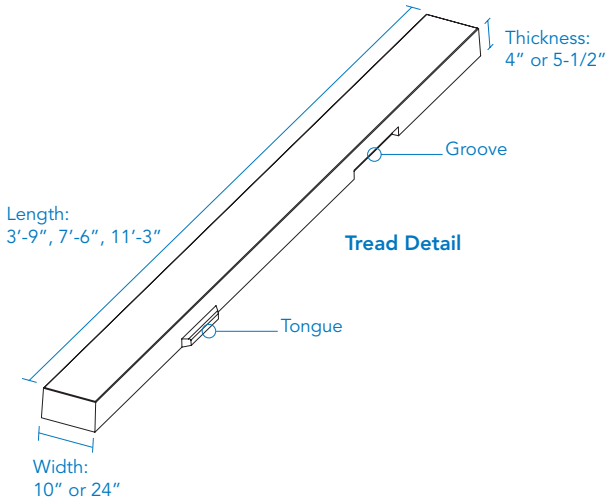

Notes:

1. Light lifting equipment required to place components.
2. This diagram is for illustrative purposes only. Preliminary engineering drawings available upon request.
3. Custom lengths available.
4. Railing and curb options available.

PermaTrak™ NORTH AMERICA

877-332-7862 ▪ permatrak.com