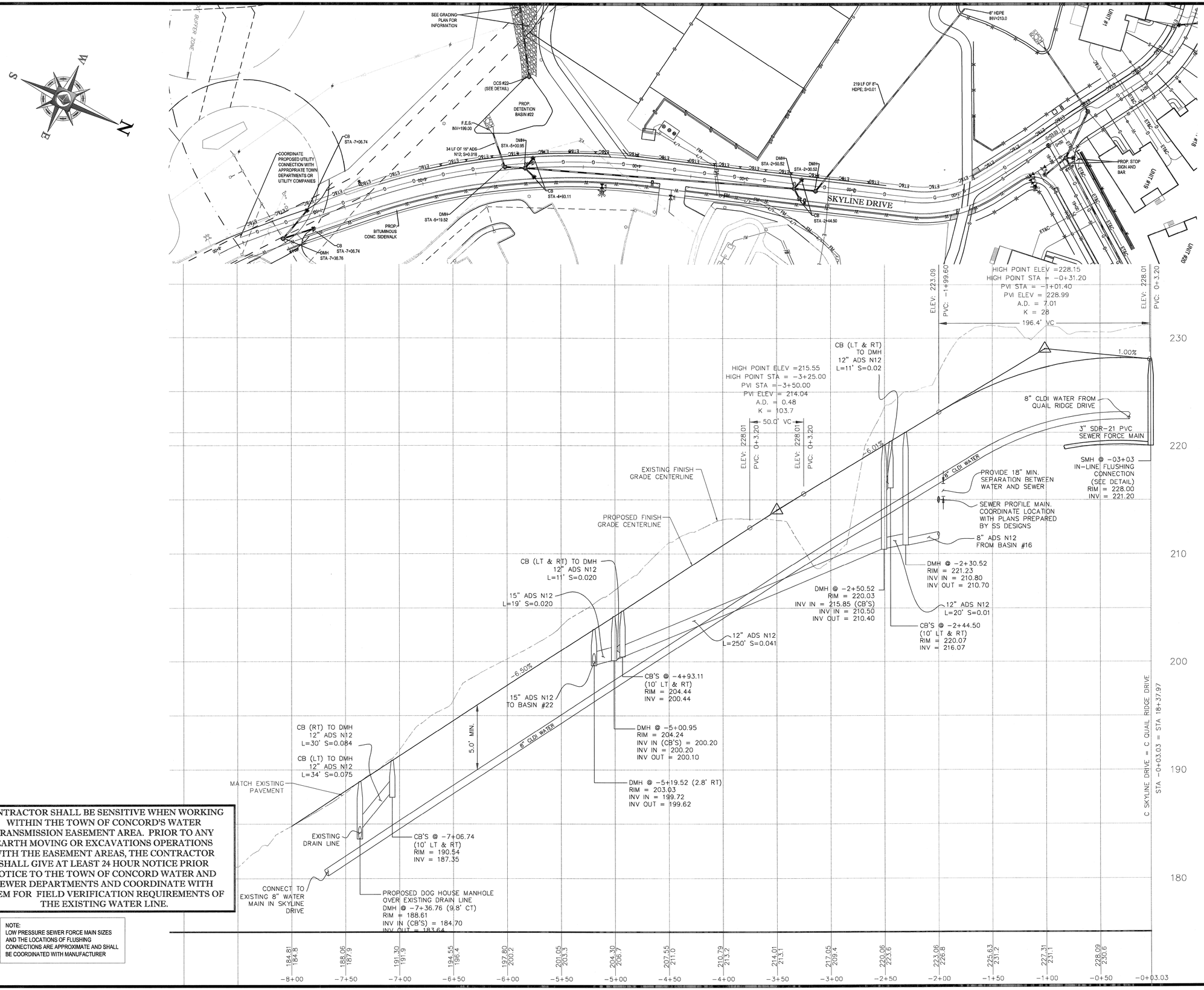

CONTRACTOR SHALL BE SENSITIVE WHEN WORKING WITHIN THE TOWN OF CONCORD'S WATER TRANSMISSION EASEMENT AREA. PRIOR TO ANY EARTH MOVING OR EXCAVATIONS OPERATIONS WITH THE EASEMENT AREAS, THE CONTRACTOR SHALL GIVE AT LEAST 24 HOUR NOTICE PRIOR NOTICE TO THE TOWN OF CONCORD WATER AND SEWER DEPARTMENTS AND COORDINATE WITH THEM FOR FIELD VERIFICATION REQUIREMENTS OF THE EXISTING WATER LINE.

NOTE:
LOW PRESSURE SEWER FORCE MAIN SIZES AND THE LOCATIONS OF FLUSHING CONNECTIONS ARE APPROXIMATE AND SHALL BE COORDINATED WITH MANUFACTURER

P:\11\W111022\DWG\w111022sdl.dwg, 19-Profile A, 4/23/2010, 10:17:14 AM, gstreetsur, XerxesG16-pc3, Uline634, 1:1

BOHLER ENGINEERING

CORPORATE OFFICE:
♦ SOUTHBOROUGH, MA

OFFICES:
♦ SOUTHBOROUGH, MA ♦ BOWIE, MD ♦ COLUMBIA, MD ♦ ALBANY, NY ♦ HUNTINGTON, NY ♦ CENTER VALLEY, PA ♦ CHALFONT, PA ♦ PHILADELPHIA, PA ♦ PITTSBURGH, PA ♦ WARRENTON, VA ♦ FORT LAUDERDALE, FL ♦ TAMPA, FL

CIVIL & CONSULTING ENGINEERS
SURVEYORS
PROJECT MANAGERS
ENVIRONMENTAL CONSULTANTS
LANDSCAPE ARCHITECTS

THE INFORMATION, DESIGNS AND CONCEPTS OF THIS PLAN ARE PROPRIETARY AND SHALL NOT BE COPIED OR USED FOR ANY PURPOSES WITHOUT THE EXPRESSED WRITTEN CONSENT OF BOHLER ENGINEERING, INC. WITHIN 30 DAYS AFTER DATE OF ISSUE. ANY REVISIONS TO THIS PLAN SHALL BE IN ACCORDANCE WITH ORDINANCE, LAW AND REGULATIONS OF THE APPROPRIATE GOVERNMENTAL AUTHORITY.

REVISIONS

REV	DATE	COMMENT	BY
1	07-01-2011	CON. COMM. SUBMISSION	JAC/ CFD
2	08-21-2011	FOR ENGINEERING REVIEW	NRK
3	10-06-2011	REVISED SKYLINE DRIVE AND ROAD NAME	CFD
4	11-01-2011	BID SET	CFD
5	01-19-2012	DEP SUBMISSION	CFD
6	02-07-2012	UPDATE CONSTRUCTION SET	MAL
7	02-15-2012	UPDATED DETAIL SHEET	MAL
8	03-09-2012	MISC. REVISIONS	CFD
9			

THE FOLLOWING STATES REQUIRE NOTIFICATION BY EXCAVATORS, DESIGNERS, OR ANY PERSON PREPARING TO DISTURB THE EARTH'S SURFACE ANYWHERE IN THE STATE.
(MA, ME, NH, RI, VT 1-888-344-7233)
(CT 1-800-922-4455)
(NY 1-800-962-7962)

ISSUED FOR CONSTRUCTION

PROJECT No.:	W111022
DRAWN BY:	CFD
CHECKED BY:	JAB/SPD
DATE:	05/23/2011
SCALE:	AS NOTED
CAD I.D.:	w111022ss8

PROJECT:

SITE PLAN

FOR

Pulte Homes

THE RESIDENCES AT QUAIL RIDGE

LOCATION OF SITE
354 B GREAT ROAD & SKYLINE DR.
TOWN OF ACTON
MIDDLESEX COUNTY, MA

BOHLER ENGINEERING
352 TURNPIKE ROAD
SOUTHBOROUGH, MA 01772
Phone: (508) 480-9900
Fax: (508) 480-9080
www.BohlerEngineering.com

S.P. DECOURSEY
COMMONWEALTH OF MASSACHUSETTS
STEPHEN P. DECOURSEY
No. 36424
PROFESSIONAL ENGINEER
MASSACHUSETTS LICENSE No. 36424
NEW HAMPSHIRE LICENSE No. 9308
VERMONT LICENSE No. 7110
CONNECTICUT LICENSE No. 23982
RHODE ISLAND LICENSE No. 7990

SHEET TITLE:

SKYLINE DRIVE PROFILE "A"

SHEET NUMBER:

19

OF 36

REV 8 - 03/09/2012

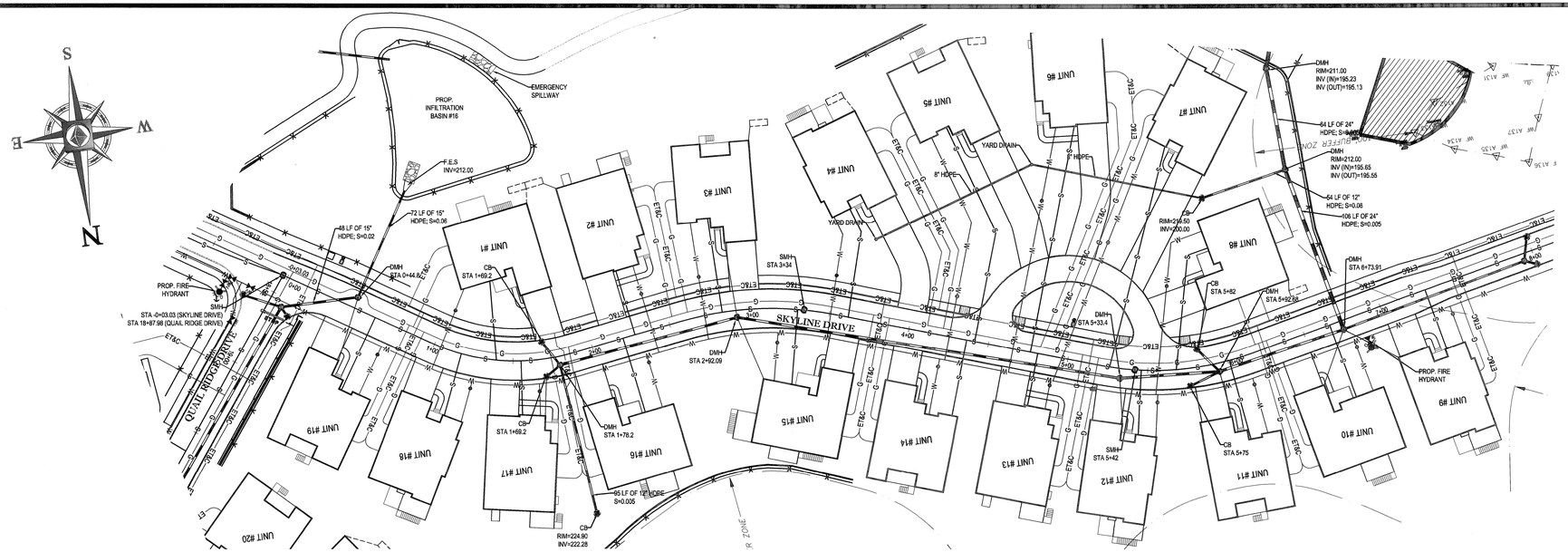

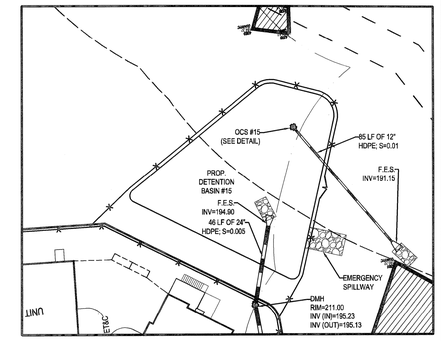

INSET OF BASIN

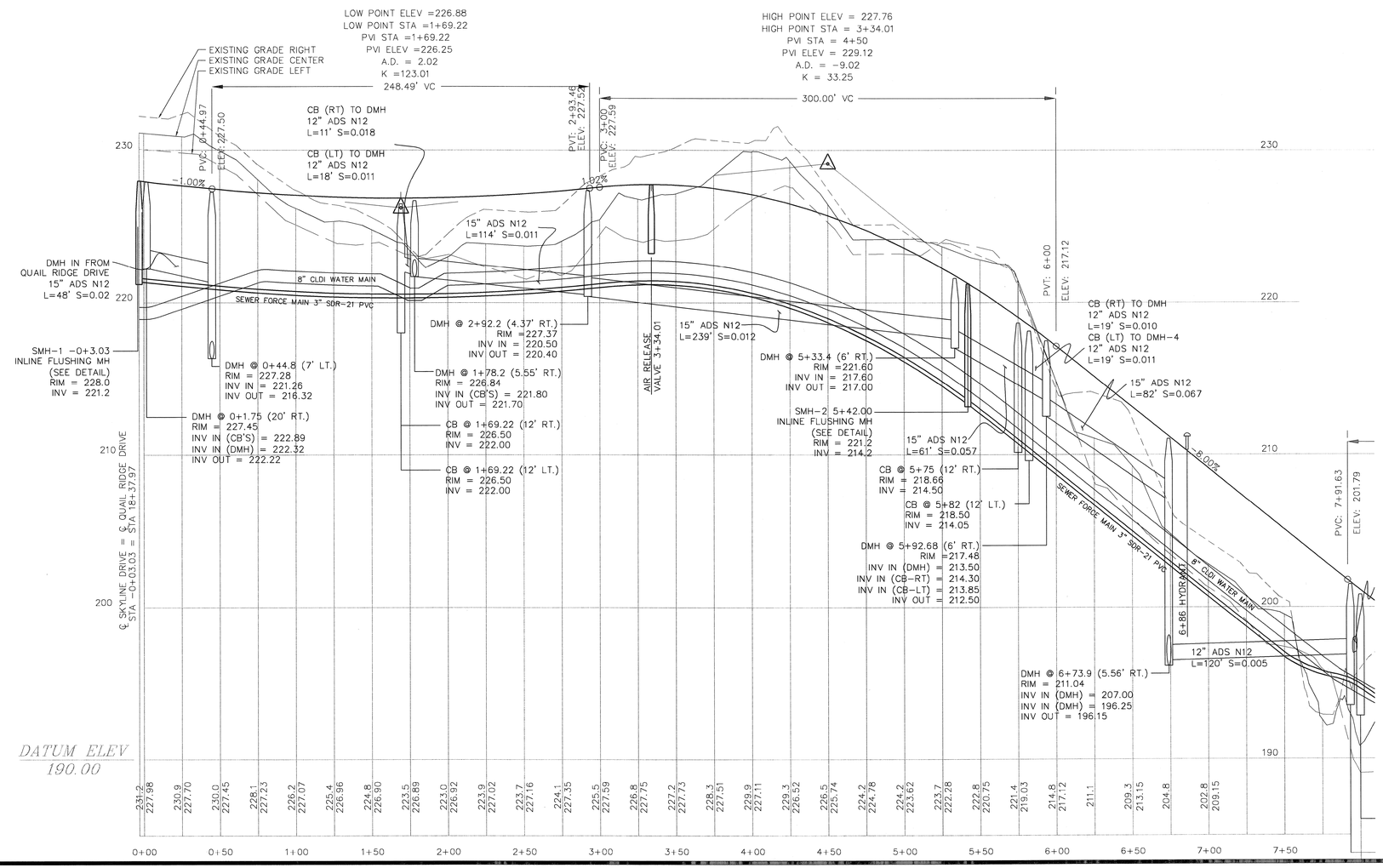

CONTRACTOR SHALL BE SENSITIVE WHEN WORKING WITHIN THE TOWN OF CONCORD'S WATER TRANSMISSION EASEMENT AREA. PRIOR TO ANY EARTH MOVING OR EXCAVATIONS OPERATIONS WITH THE EASEMENT AREAS, THE CONTRACTOR SHALL GIVE AT LEAST 24 HOUR NOTICE PRIOR NOTICE TO THE TOWN OF CONCORD WATER AND SEWER DEPARTMENTS AND COORDINATE WITH THEM FOR FIELD VERIFICATION REQUIREMENTS OF THE EXISTING WATER LINE.

NOTE:
LOW PRESSURE SEWER FORCE MAIN SIZES AND THE LOCATIONS OF FLUSHING CONNECTIONS ARE APPROXIMATE AND SHALL BE COORDINATED WITH MANUFACTURER

40 20 10 0 40
1"= 40'

BOHLER ENGINEERING

CORPORATE OFFICE:
◆ MORRIS, NJ

OFFICES:
◆ SOUTHBOROUGH, MA
◆ BOWIE, MD
◆ CHARLOTTE, NC
◆ ALBANY, NY
◆ ROCHESTER, NY
◆ CENTER VALLEY, PA
◆ CHALFONT, PA
◆ PHILADELPHIA, PA
◆ PITTSBURGH, PA
◆ WARRENTON, VA
◆ FORT LAUDERDALE, FL
◆ TAMPA, FL

CIVIL & CONSULTING ENGINEERS
SURVEYORS
PROJECT MANAGERS
ENVIRONMENTAL CONSULTANTS
LANDSCAPE ARCHITECTS

THE INFORMATION, DESIGNS AND COSTING OF THIS PLAN ARE PROPRIETARY AND SHALL NOT BE COPIED OR USED FOR ANY PURPOSE EXCEPT FOR THIS ENTITIES PROJECT WITHOUT WRITTEN AUTHORIZATION. ALL ARTWORK, PLANS AND SPECIFICATIONS, WHETHER FILED OR NOT FILED, ARE THE PROPERTY OF BOHLER ENGINEERING.

REVISIONS

REV	DATE	COMMENT	BY
1	07-01-2011	CON. COMM. SUBMISSION	JAC/ CFD
2	08-21-2011	FOR ENGINEERING REVIEW	NRK
3	10-06-2011	REVISED SKYLINE DRIVE AND ROAD NAME	CFD
4	11-01-2011	BID SET	CFD
5	01-19-2012	DEP SUBMISSION	CFD
6	02-07-2012	UPDATE CONSTRUCTION SET	MAL
7	02-15-2012	UPDATED DETAIL SHEET	MAL
8	03-09-2012	MISC. REVISIONS	CFD
9			

THE FOLLOWING STATES REQUIRE NOTIFICATION BY EXCAVATORS, DESIGNERS, OR ANY PERSON PREPARING TO DISTURB THE EARTH'S SURFACE ANYWHERE IN THE STATE
(MA, ME, NH, RI, VT 1-888-344-7233)
(CT 1-800-922-4455)
(NY 1-800-962-7962)

ISSUED FOR CONSTRUCTION

PROJECT No.:	W111022
DRAWN BY:	CFD
CHECKED BY:	JAB/SPD
DATE:	05/23/2011
SCALE:	AS NOTED
CAD I.D.:	w111022ss8

PROJECT:

SITE PLAN

FOR

Pulte Homes

THE RESIDENCES AT QUAIL RIDGE

LOCATION OF SITE
354 B GREAT ROAD & SKYLINE DR.
TOWN OF ACTON
MIDDLESEX COUNTY, MA

BOHLER ENGINEERING
352 TURNPIKE ROAD
SOUTHBOROUGH, MA 01772
Phone: (508) 480-9900
Fax: (508) 480-9080
www.BohlerEngineering.com

S.P. BeCOURSEY
COMMONWEALTH OF MASSACHUSETTS
STEPHEN P. BeCOURSEY
CIVIL
PROFESSIONAL ENGINEER
No. 46824
MAINE REGISTRATION No. 6424
NEW HAMPSHIRE LICENSE No. 9308
NEW YORK LICENSE No. 076426
VERMONT LICENSE No. 7110
CONNECTICUT LICENSE No. 23882
RHODE ISLAND LICENSE No. 7990

SHEET TITLE:

SKYLINE DRIVE PROFILE "B"

SHEET NUMBER:

20

OF 36

REV 8 - 03/09/2012

P:\111\W111022\DWG\w111022ss8.dwg, 20-Profile B, 4/23/2010, 10:17:14 AM, jacob.hoar, Xerox5316 i.pc3, User$34, 1:1

CONTRACTOR SHALL BE SENSITIVE WHEN WORKING WITHIN THE TOWN OF CONCORD'S WATER TRANSMISSION EASEMENT AREA. PRIOR TO ANY EARTH MOVING OR EXCAVATIONS OPERATIONS WITH THE EASEMENT AREAS, THE CONTRACTOR SHALL GIVE AT LEAST 24 HOUR NOTICE PRIOR NOTICE TO THE TOWN OF CONCORD WATER AND SEWER DEPARTMENTS AND COORDINATE WITH THEM FOR FIELD VERIFICATION REQUIREMENTS OF THE EXISTING WATER LINE.

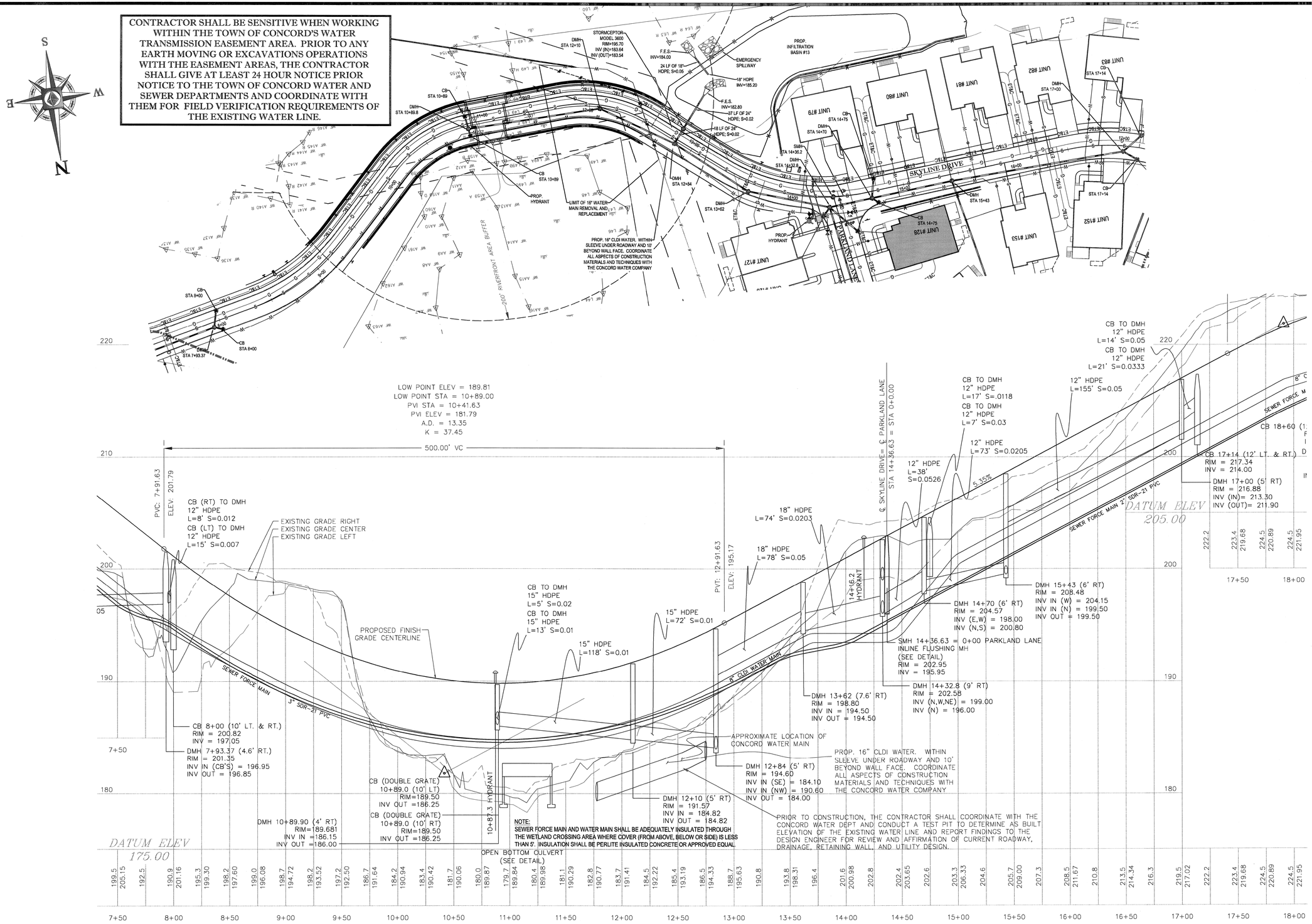

NOTE:
LOW PRESSURE SEWER FORCE MAIN SIZES AND THE LOCATIONS OF FLUSHING CONNECTIONS ARE APPROXIMATE AND SHALL BE COORDINATED WITH MANUFACTURER

40 20 10 0 40
1"= 40'

BOHLER ENGINEERING

CORPORATE OFFICE: ◆ WARREN, NJ

CIVIL & CONSULTING ENGINEERS
SURVEYORS
PROJECT MANAGERS
ENVIRONMENTAL CONSULTANTS
LANDSCAPE ARCHITECTS

◆ SOUTHBOROUGH, MA ◆ BOWIE, MD ◆ HOUSTON, TX ◆ ALBANY, NY ◆ CENTENNIAL, CO ◆ CHALFONT, PA ◆ PHILADELPHIA, PA ◆ PITTSBURGH, PA ◆ WARRENTON, VA ◆ FORT LAUDERDALE, FL ◆ TAMPA, FL

THE INFORMATION, DESIGNS AND CONTENT OF THIS PLAN ARE PROPRIETARY AND SHALL NOT BE COPIED OR USED FOR ANY PURPOSE WITHOUT PRIOR WRITTEN AUTHORIZATION FROM BOHLER ENGINEERING. ANY UNAUTHORIZED USE SHALL BE SUBJECT TO CLAIMS FOR DAMAGES. © COPYRIGHT 2 BOHLER ENGINEERING

REVISIONS

REV	DATE	COMMENT	BY
1	07-01-2011	CON. COMM. SUBMISSION	JAC/ CFD
2	08-21-2011	FOR ENGINEERING REVIEW	NRK
3	10-06-2011	REVISED SKYLINE DRIVE AND ROAD NAME	CFD
4	11-01-2011	BID SET	CFD
5	01-19-2012	DEP SUBMISSION	CFD
6	02-07-2012	UPDATE CONSTRUCTION SET	MAL
7	02-15-2012	UPDATED DETAIL SHEET	MAL
8	03-09-2012	MISC. REVISIONS	CFD
9			

THE FOLLOWING STATES REQUIRE NOTIFICATION BY EXCAVATORS, DESIGNERS, OR ANY PERSON PREPARING TO DISTURB THE EARTH'S SURFACE ANYWHERE IN THE STATE.
(MA, ME, NH, RI, VT 1-888-344-7233)
(CT 1-800-922-4455)
(NY 1-800-962-7962)

ISSUED FOR CONSTRUCTION

PROJECT No.:	W111022
DRAWN BY:	CFD
CHECKED BY:	JAB/SPD
DATE:	05/23/2011
SCALE:	AS NOTED
CAD I.D.:	w111022ss8

PROJECT:

SITE PLAN

FOR

Pulte Homes

THE RESIDENCES AT QUAIL RIDGE

LOCATION OF SITE
354 B GREAT ROAD & SKYLINE DR.
TOWN OF ACTON
MIDDLESEX COUNTY, MA

BOHLER ENGINEERING
352 TURNPIKE ROAD
SOUTHBOROUGH, MA 01772
Phone: (508) 480-9900
Fax: (508) 480-9080
www.BohlerEngineering.com

S.P. DeCOURSEY
COMMONWEALTH OF MASSACHUSETTS
STEPHEN P. DeCOURSEY
CIVIL
No. 34424
PROFESSIONAL ENGINEER
MASSACHUSETTS LICENSE No. 34424
NEW HAMPSHIRE LICENSE No. 9308
VERMONT LICENSE No. 7110
CONNECTICUT LICENSE No. 23852
RHODE ISLAND LICENSE No. 7590

SHEET TITLE:

SKYLINE DRIVE PROFILE "C"

SHEET NUMBER:

21

OF 36

REV 8 - 03/09/2012

P:\111\W111022\DWGs\111022ss8-Proj. 21-Profile C, 4/23/2010, 10:17:14 AM, jstanthur, XerxesS1H-1-pc3, 1.bw=634, 1:1

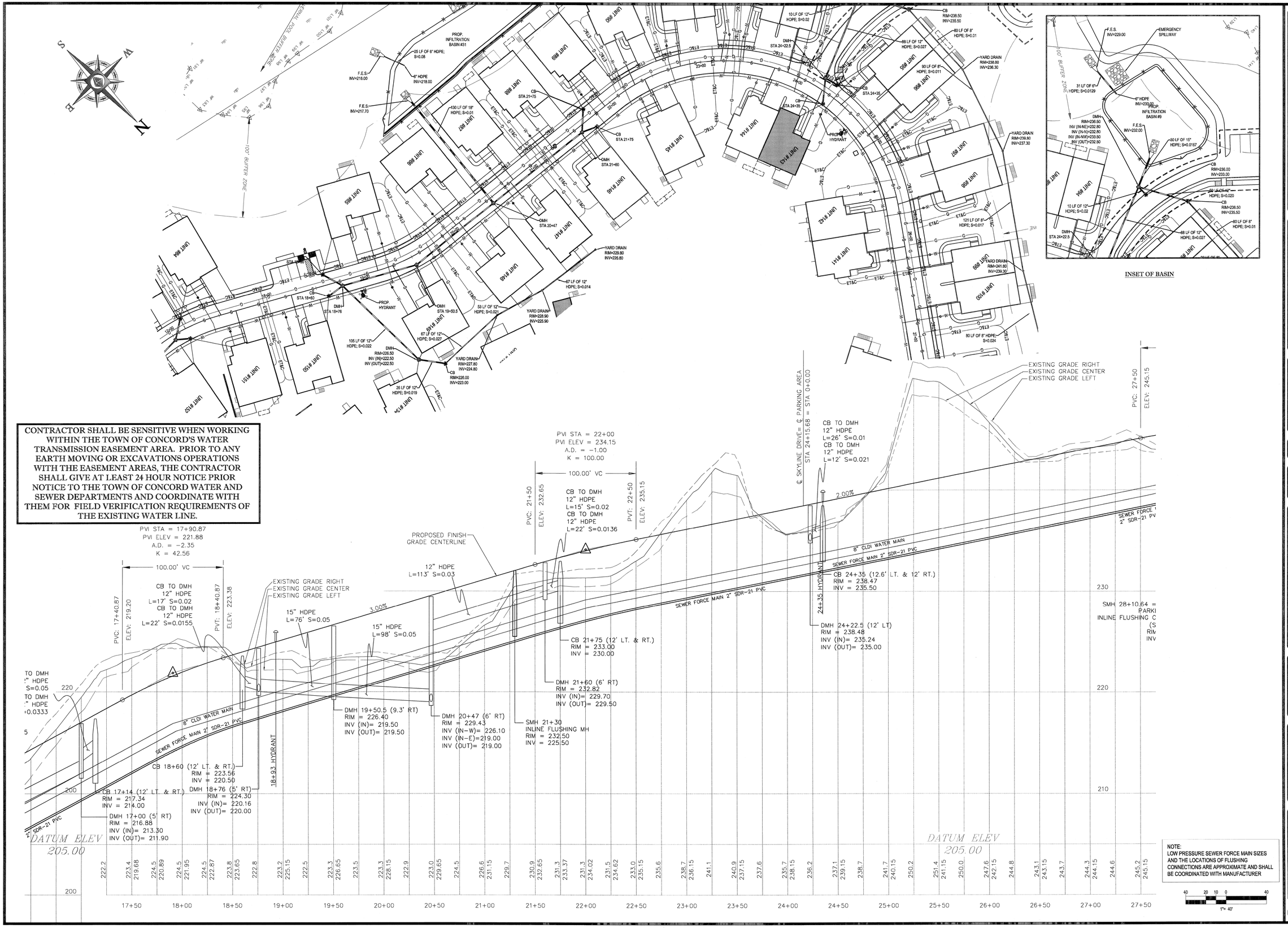

BOHLER ENGINEERING

CORPORATE OFFICE: ♦ WARREN, NJ

CIVIL & CONSULTING ENGINEERS
SURVEYORS
PROJECT MANAGERS
ENVIRONMENTAL CONSULTANTS
LANDSCAPE ARCHITECTS

♦ SOUTHBOROUGH, MA ♦ BOWIE, MD ♦ COLUMBIA, MD ♦ ALBANY, NY ♦ POUGHKEEPSIE, NY ♦ CHALFONT, PA ♦ PHILADELPHIA, PA ♦ READING, PA ♦ WORRETON, VA ♦ FORT LAUDERDALE, FL ♦ TAMPA, FL

THE INFORMATION, DESIGNS AND CONTENT OF THIS PLAN ARE PROPRIETARY AND SHALL NOT BE COPIED OR USED FOR ANY PURPOSE WITHOUT PRIOR WRITTEN AUTHORIZATION FROM BOHLER ENGINEERING. THIS PLAN IS COPYRIGHTED. COPYRIGHT © 2011 BOHLER ENGINEERING

REVISIONS

REV	DATE	COMMENT	BY
1	07-01-2011	CON. COMM. SUBMISSION	JAC/ CFD
2	08-21-2011	FOR ENGINEERING REVIEW	NRK
3	10-06-2011	REVISED SKYLINE DRIVE AND ROAD NAME	CFD
4	11-01-2011	BID SET	CFD
5	01-19-2012	DEP SUBMISSION	CFD
6	02-07-2012	UPDATE CONSTRUCTION SET	MAL
7	02-15-2012	UPDATED DETAIL SHEET	MAL
8	03-09-2012	MISC. REVISIONS	CFD
9			

THE FOLLOWING STATES REQUIRE NOTIFICATION BY EXCAVATORS, DESIGNERS, OR ANY PERSON PREPARING TO DISTURB THE EARTH'S SURFACE ANYWHERE IN THE STATE.
(MA, ME, NH, RI, VT 1-888-344-7233)
(CT 1-800-922-4455)
(NY 1-800-962-7962)

ISSUED FOR CONSTRUCTION

PROJECT No.:	W111022
DRAWN BY:	CFD
CHECKED BY:	JAB/SPD
DATE:	05/23/2011
SCALE:	AS NOTED
CAD I.D.:	w111022ss8

PROJECT:

SITE PLAN

FOR

Pulte Homes

THE RESIDENCES AT QUAIL RIDGE
LOCATION OF SITE
354 B GREAT ROAD & SKYLINE DR.
TOWN OF ACTON
MIDDLESEX COUNTY, MA

BOHLER ENGINEERING
352 TURNPIKE ROAD
SOUTHBOROUGH, MA 01772
Phone: (508) 480-9900
Fax: (508) 480-9080
www.BohlerEngineering.com

S.P. DECOURSEY
STEPHEN P. DECOURSEY
PROFESSIONAL ENGINEER
MASSACHUSETTS LICENSE No. 34424
NEW HAMPSHIRE LICENSE No. 9308
NEW YORK LICENSE No. 087710
CONNECTICUT LICENSE No. 23962
RHODE ISLAND LICENSE No. 7990

SHEET TITLE:

SKYLINE DRIVE PROFILE "D"

SHEET NUMBER:

22 OF 36

REV 8 - 03/09/2012

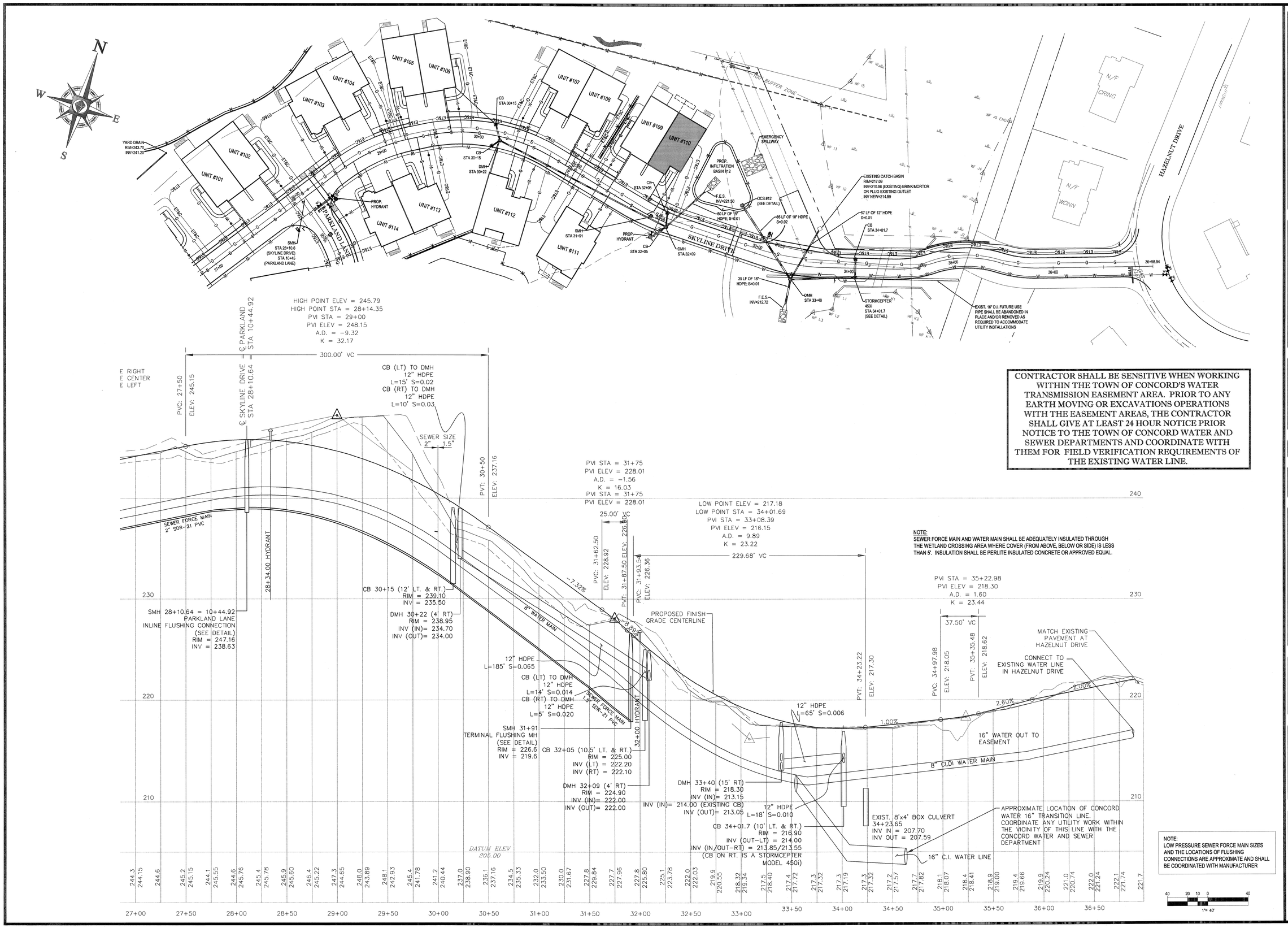

NOTE:
SEWER FORCE MAIN AND WATER MAIN SHALL BE ADEQUATELY INSULATED THROUGH THE WETLAND CROSSING AREA WHERE COVER (FROM ABOVE, BELOW OR SIDE) IS LESS THAN 5'. INSULATION SHALL BE PERLITE INSULATED CONCRETE OR APPROVED EQUAL.

CONTRACTOR SHALL BE SENSITIVE WHEN WORKING WITHIN THE TOWN OF CONCORD'S WATER TRANSMISSION EASEMENT AREA. PRIOR TO ANY EARTH MOVING OR EXCAVATIONS OPERATIONS WITH THE EASEMENT AREAS, THE CONTRACTOR SHALL GIVE AT LEAST 24 HOUR NOTICE PRIOR NOTICE TO THE TOWN OF CONCORD WATER AND SEWER DEPARTMENTS AND COORDINATE WITH THEM FOR FIELD VERIFICATION REQUIREMENTS OF THE EXISTING WATER LINE.

NOTE:
LOW PRESSURE SEWER FORCE MAIN SIZES AND THE LOCATIONS OF FLUSHING CONNECTIONS ARE APPROXIMATE AND SHALL BE COORDINATED WITH MANUFACTURER

40 20 10 0 40
1"= 40'

BOHLER ENGINEERING

CORPORATE OFFICE:
WARREN, NJ

CIVIL & CONSULTING ENGINEERS
SURVEYORS
PROJECT MANAGERS
ENVIRONMENTAL CONSULTANTS
LANDSCAPE ARCHITECTS

SOUTHBOROUGH, MA
BOWIE, MD
CROSWELL, MI
ALBANY, NY
HOLMDEL, NJ
PISCATAWAY, NJ
TOMS RIVER, NJ
CHALFONT, PA
PHILADELPHIA, PA
PITTSBURGH, PA
WARRENTON, VA
RICHMOND, VA
FORT LAUDERDALE, FL
DENVER, CO

THE INFORMATION, DESIGNS AND CONTENT OF THIS PLAN AND PROPERTIES AND SHALL NOT BE EXPRESS OR IMPLIED FOR ANY PURPOSE WITHOUT PRIOR WRITTEN AUTHORIZATION FROM BOHLER ENGINEERING. ANY UNAUTHORIZED USE IS PROHIBITED AND SHALL BE SUBJECT TO PROSECUTION TO THE FULLEST EXTENT OF THE LAW.

REVISIONS

REV	DATE	COMMENT	BY
1	07-01-2011	CON. COMM. SUBMISSION	JAC/ CFD
2	08-21-2011	FOR ENGINEERING REVIEW	NRK
3	10-06-2011	REVISED SKYLINE DRIVE AND ROAD NAME	CFD
4	11-01-2011	BID SET	CFD
5	01-19-2012	DEP SUBMISSION	CFD
6	02-07-2012	UPDATE CONSTRUCTION SET	MAL
7	02-15-2012	UPDATED DETAIL SHEET	MAL
8	03-09-2012	MISC. REVISIONS	CFD
9			

THE FOLLOWING STATES REQUIRE NOTIFICATION BY EXCAVATORS, DESIGNERS, OR ANY PERSON PREPARING TO DISTURB THE EARTH'S SURFACE ANYWHERE IN THE STATE.
(MA, ME, NH, RI, VT 1-888-344-7233)
(CT 1-800-922-4455)
(NY 1-800-962-7962)

ISSUED FOR CONSTRUCTION

PROJECT No.:	W111022
DRAWN BY:	CFD
CHECKED BY:	JAB/SPD
DATE:	05/23/2011
SCALE:	AS NOTED
CAD I.D.:	w11102zss8

PROJECT:

SITE PLAN

FOR

Pulte Homes

THE RESIDENCES AT QUAIL RIDGE

LOCATION OF SITE
354 B GREAT ROAD & SKYLINE DR.
TOWN OF ACTON
MIDDLESEX COUNTY, MA

BOHLER ENGINEERING
352 TURNPIKE ROAD
SOUTHBOROUGH, MA 01772
Phone: (508) 480-9900
Fax: (508) 480-9080
www.BohlerEngineering.com

S.P. DECOURSEY
STEPHEN P. DeCOURSEY
PROFESSIONAL ENGINEER
MASSACHUSETTS LICENSE No. 38424
NEW HAMPSHIRE LICENSE No. 9308
VERMONT LICENSE No. 7110
CONNECTICUT LICENSE No. 23960
RHODE ISLAND LICENSE No. 7990

SHEET TITLE:

SKYLINE DRIVE PROFILE "E"

SHEET NUMBER:
23
OF 36

REV 8 - 03/09/2012

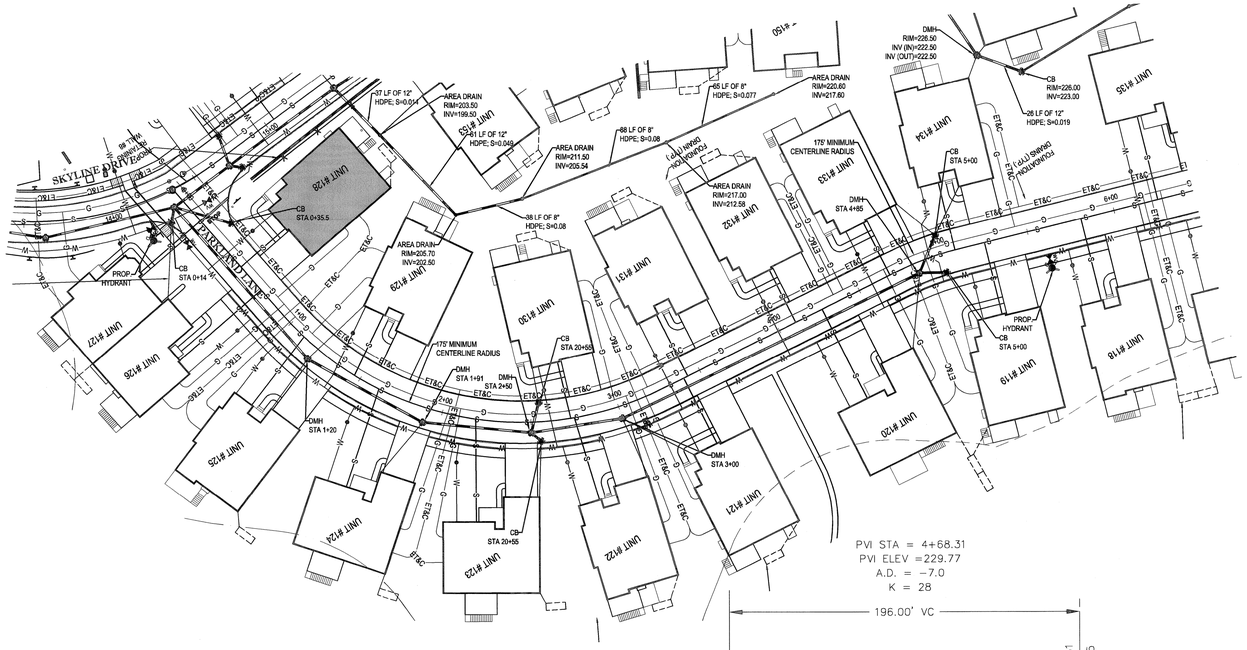

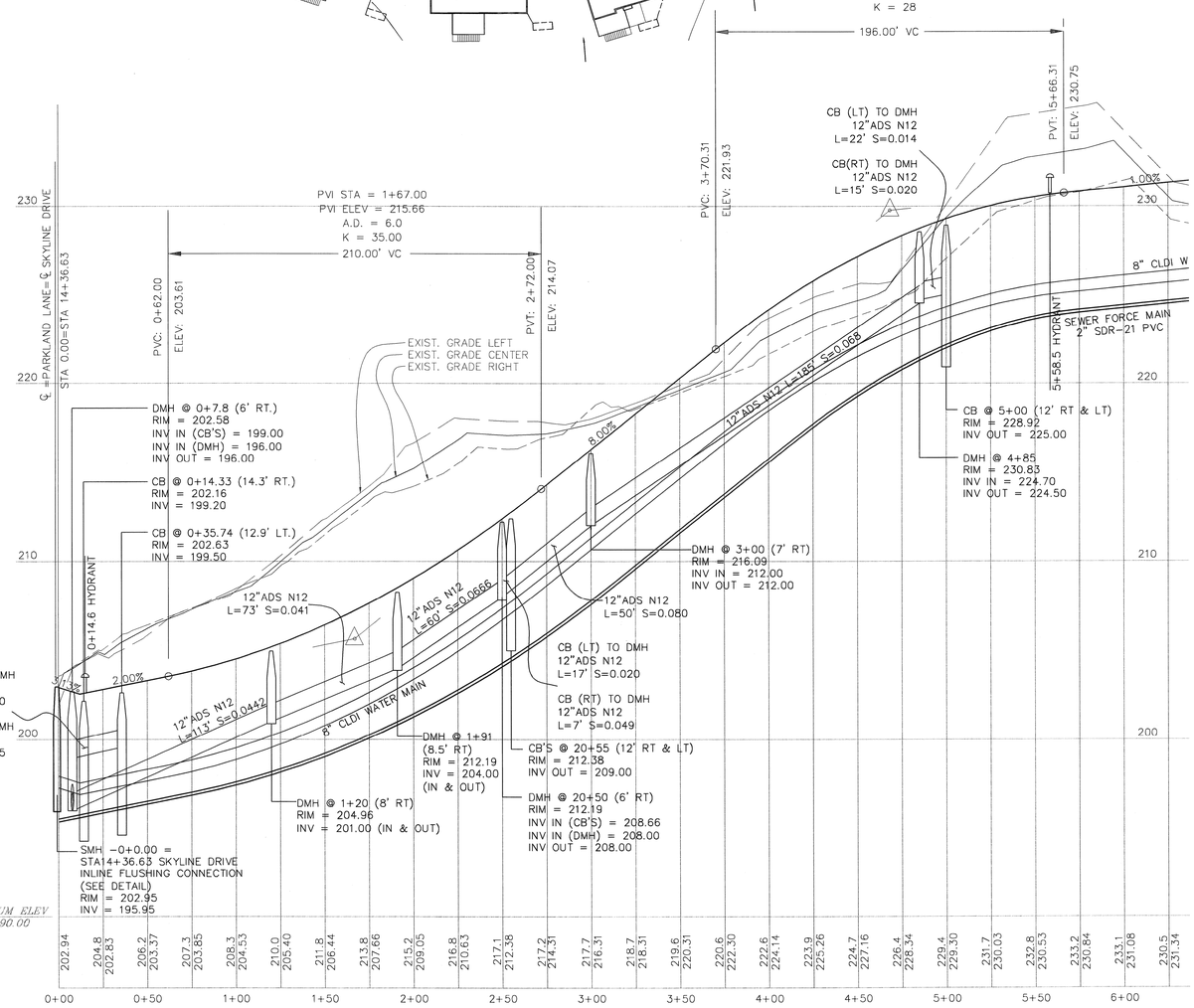

CONTRACTOR SHALL BE SENSITIVE WHEN WORKING WITHIN THE TOWN OF CONCORD'S WATER TRANSMISSION EASEMENT AREA. PRIOR TO ANY EARTH MOVING OR EXCAVATIONS OPERATIONS WITH THE EASEMENT AREAS, THE CONTRACTOR SHALL GIVE AT LEAST 24 HOUR NOTICE PRIOR NOTICE TO THE TOWN OF CONCORD WATER AND SEWER DEPARTMENTS AND COORDINATE WITH THEM FOR FIELD VERIFICATION REQUIREMENTS OF THE EXISTING WATER LINE.

NOTE:
LOW PRESSURE SEWER FORCE MAIN SIZES AND THE LOCATIONS OF FLUSHING CONNECTIONS ARE APPROXIMATE AND SHALL BE COORDINATED WITH MANUFACTURER

40 20 10 0 40
1"= 40'

BOHLER ENGINEERING

CORPORATE OFFICE:
WARREN, NJ

CIVIL & CONSULTING ENGINEERS
SURVEYORS
PROJECT MANAGERS
ENVIRONMENTAL CONSULTANTS
LANDSCAPE ARCHITECTS

SOUTHBOROUGH, MA
BOWIE, MD
CHARLOTTE, NC
ALBANY, NY
MORGANTOWN, WV
CENTER VALLEY, PA
CHALFONT, PA
PHILADELPHIA, PA
PITTSBURGH, PA
WASHINGTON, VA
FORT LAUDERDALE, FL
TAMPA, FL

THE INFORMATION, DESIGNS AND CONTENT OF THIS PLAN ARE PROPRIETARY AND SHALL NOT BE COPIED OR USED FOR ANY PURPOSE WITHOUT PRIOR WRITTEN AUTHORIZATION FROM BOHLER ENGINEERING. THIS AUTHORIZATION IS GRANTED FOR THIS SITE ONLY AND FOR THE PURPOSE OF CONSTRUCTION PURSUANT TO A BOHLER ENGINEERING PROPOSAL.

REVISIONS

REV	DATE	COMMENT	BY
1	07-01-2011	CON. COMM. SUBMISSION	JAC/ CFD
2	08-21-2011	FOR ENGINEERING REVIEW	NRK
3	10-06-2011	REVISED SKYLINE DRIVE AND ROAD NAME	CFD
4	11-01-2011	BID SET	CFD
5	01-19-2012	DEP SUBMISSION	CFD
6	02-07-2012	UPDATE CONSTRUCTION SET	MAL
7	02-15-2012	UPDATED DETAIL SHEET	MAL
8	03-09-2012	MISC. REVISIONS	CFD
9			

THE FOLLOWING STATES REQUIRE NOTIFICATION BY EXCAVATORS, DESIGNERS, OR ANY PERSON PREPARING TO DISTURB THE EARTH'S SURFACE ANYWHERE IN THE STATE
(MA, ME, NH, RI, VT 1-888-344-7233)
(CT 1-800-922-4455)
(NY 1-800-962-7962)

ISSUED FOR CONSTRUCTION

PROJECT No.:	W111022
DRAWN BY:	CFD
CHECKED BY:	JAB/SPD
DATE:	05/23/2011
SCALE:	AS NOTED
CAD I.D.:	w111022ss8

PROJECT:

SITE PLAN

FOR

Pulte Homes

THE RESIDENCES AT QUAIL RIDGE

LOCATION OF SITE
354 B GREAT ROAD & SKYLINE DR.
TOWN OF ACTON
MIDDLESEX COUNTY, MA

BOHLER ENGINEERING
352 TURNPIKE ROAD
SOUTHBOROUGH, MA 01772
Phone: (508) 480-9900
Fax: (508) 480-9080
www.BohlerEngineering.com

S.P. DECOURSEY
STEPHEN P. DECOURSEY
No. 7110
PROFESSIONAL ENGINEER
MASSACHUSETTS LICENSE No. 36424
MAINE LICENSE No. 6308
NEW HAMPSHIRE LICENSE No. 6308
VERMONT LICENSE No. 7110
CONNECTICUT LICENSE No. 23862
RHODE ISLAND LICENSE No. 7990

SHEET TITLE:

PARKLAND LANE PROFILE "A"

SHEET NUMBER:
24
OF 36

REV 8 - 03/09/2012

P:\!!W111022\DWG\w111022ss8.dwg, 24-Profile 5, 4/23/2010, 10:17:14 AM, sphenihan, Xrefs:W2010-1-pc3, Layer:634, 1:1

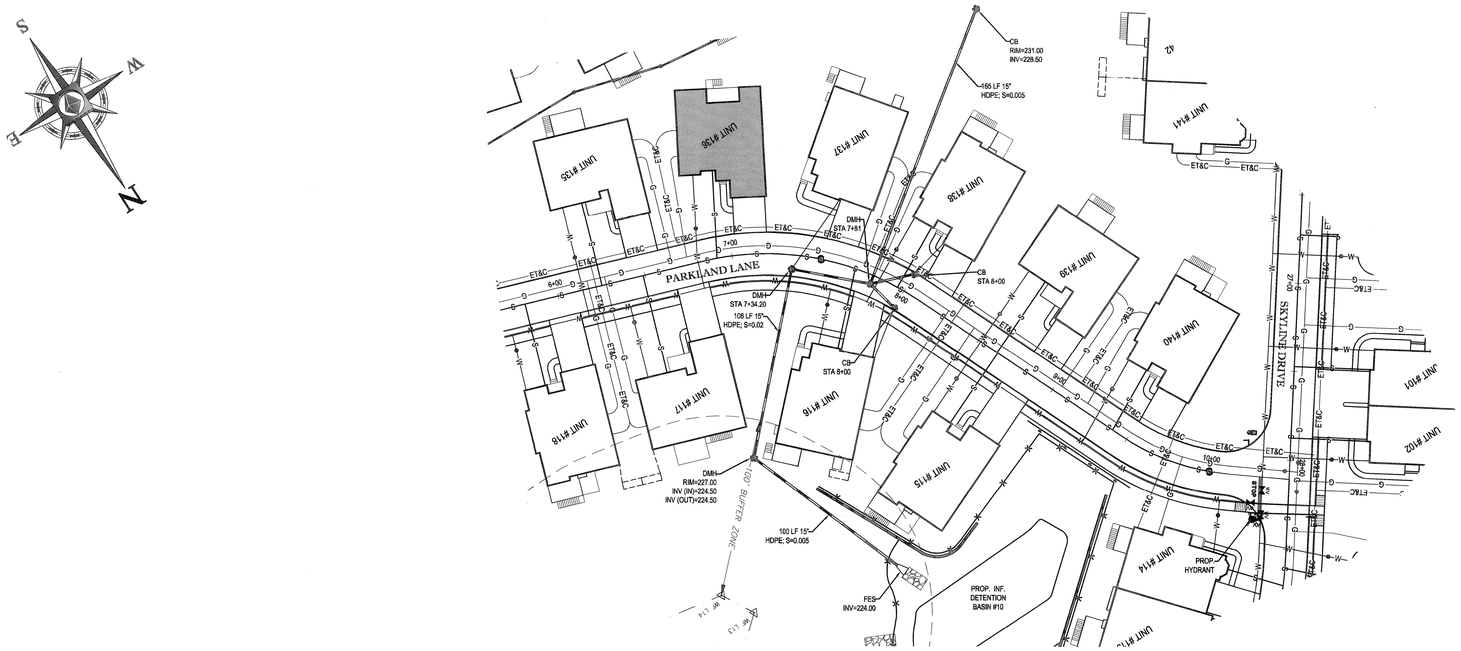

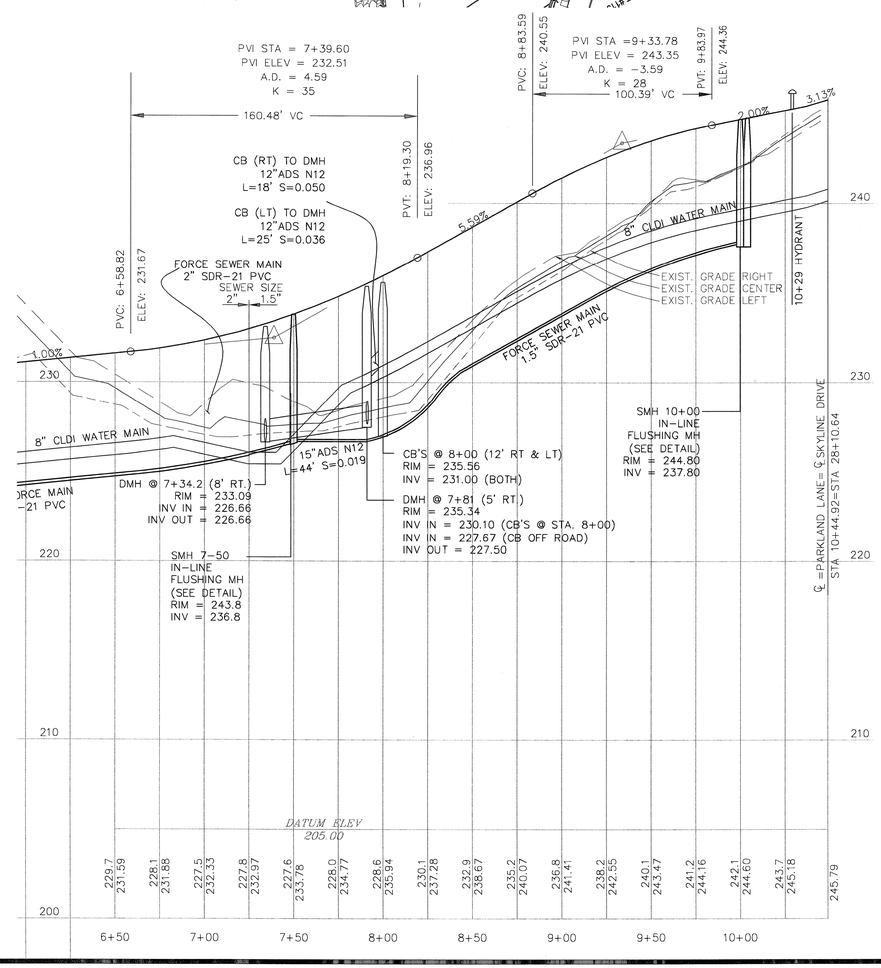

CONTRACTOR SHALL BE SENSITIVE WHEN WORKING WITHIN THE TOWN OF CONCORD'S WATER TRANSMISSION EASEMENT AREA. PRIOR TO ANY EARTH MOVING OR EXCAVATIONS OPERATIONS WITH THE EASEMENT AREAS, THE CONTRACTOR SHALL GIVE AT LEAST 24 HOUR NOTICE PRIOR NOTICE TO THE TOWN OF CONCORD WATER AND SEWER DEPARTMENTS AND COORDINATE WITH THEM FOR FIELD VERIFICATION REQUIREMENTS OF THE EXISTING WATER LINE.

40 20 10 0 40
1"= 40'

P:\111\W111022\DWG\w111022sb8.dwg, 25-Profile C, 4/23/2010, 10:37:14 AM, jaeschhauer, XerocX310-1.pc3, Uspc434, 1:1

BOHLER ENGINEERING

CORPORATE OFFICE:
♦ WARREN, NJ
(908) 668-8300

CIVIL & CONSULTING ENGINEERS
SURVEYORS
PROJECT MANAGERS
ENVIRONMENTAL CONSULTANTS
LANDSCAPE ARCHITECTS

♦ SOUTHBOROUGH, MA
♦ BOWIE, MD
♦ TOTOWA, NJ
♦ ALBANY, NY
♦ PONKOKOMA, NY
♦ HARRISBURG, PA
♦ CHALFONT, PA
♦ PHILADELPHIA, PA
♦ PITTSBURGH, PA
♦ WARRENTON, VA
♦ FORT LAUDERDALE, FL
♦ ORLANDO, FL

THE INFORMATION, DESIGN AND CONTENT OF THIS PLAN ARE PROPRIETARY AND SHALL NOT BE COPIED OR USED FOR ANY PURPOSE WITHOUT PRIOR WRITTEN AUTHORIZATION FROM BOHLER ENGINEERING. ONLY APPROVED, SIGNED AND SEALED PLANS SHALL BE UTILIZED FOR CONSTRUCTION PURPOSES. © 2008 BOHLER ENGINEERING

REVISIONS

REV	DATE	COMMENT	BY
1	07-01-2011	CON. COMM. SUBMISSION	JAC/ CFD
2	08-21-2011	FOR ENGINEERING REVIEW	NRK
3	10-06-2011	REVISED SKYLINE DRIVE AND ROAD NAME	CFD
4	11-01-2011	BID SET	CFD
5	01-19-2012	DEP SUBMISSION	CFD
6	02-07-2012	UPDATE CONSTRUCTION SET	MAL
7	02-15-2012	UPDATED DETAIL SHEET	MAL
8	03-09-2012	MISC. REVISIONS	CFD
9			

THE FOLLOWING STATES REQUIRE NOTIFICATION BY EXCAVATORS, DESIGNERS, OR ANY PERSON PREPARING TO DISTURB THE EARTH'S SURFACE ANYWHERE IN THE STATE.
(MA, ME, NH, RI, VT 1-888-344-7233)
(CT 1-800-922-4455)
(NY 1-800-962-7962)

ISSUED FOR CONSTRUCTION

PROJECT No.:	W111022
DRAWN BY:	CFD
CHECKED BY:	JAB/SPD
DATE:	05/23/2011
SCALE:	AS NOTED
CAD I.D.:	w111022ss8

PROJECT:

SITE PLAN

FOR

Pulte Homes

THE RESIDENCES AT QUAIL RIDGE

LOCATION OF SITE
354 B GREAT ROAD & SKYLINE DR.
TOWN OF ACTON
MIDDLESEX COUNTY, MA

BOHLER ENGINEERING
352 TURNPIKE ROAD
SOUTHBOROUGH, MA 01772
Phone: (508) 480-9900
Fax: (508) 480-9080
www.BohlerEngineering.com

S.P. DECOURSEY
NEW JERSEY
STEPHEN P. DECOURSEY
CIVIL
PROFESSIONAL ENGINEER
MASSACHUSETTS LICENSE No. 34424
NEW JERSEY LICENSE No. 9308
PENNSYLVANIA LICENSE No. 3408
VERMONT LICENSE No. 7110
CONNECTICUT LICENSE No. 23662
RHODE ISLAND LICENSE No. 7990

SHEET TITLE:

PARKLAND LANE PROFILE "B"

SHEET NUMBER:

25

OF 36

REV 8 - 03/09/2012

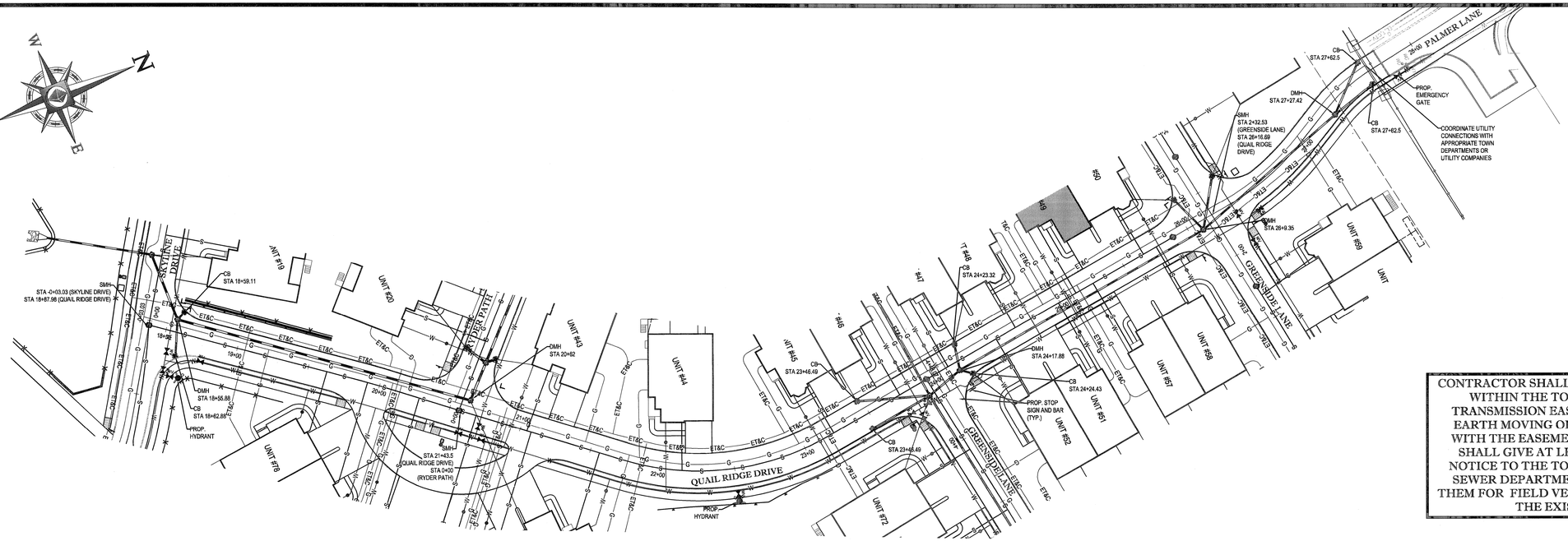

CONTRACTOR SHALL BE SENSITIVE WHEN WORKING WITHIN THE TOWN OF CONCORD'S WATER TRANSMISSION EASEMENT AREA. PRIOR TO ANY EARTH MOVING OR EXCAVATIONS OPERATIONS WITH THE EASEMENT AREAS, THE CONTRACTOR SHALL GIVE AT LEAST 24 HOUR NOTICE PRIOR NOTICE TO THE TOWN OF CONCORD WATER AND SEWER DEPARTMENTS AND COORDINATE WITH THEM FOR FIELD VERIFICATION REQUIREMENTS OF THE EXISTING WATER LINE.

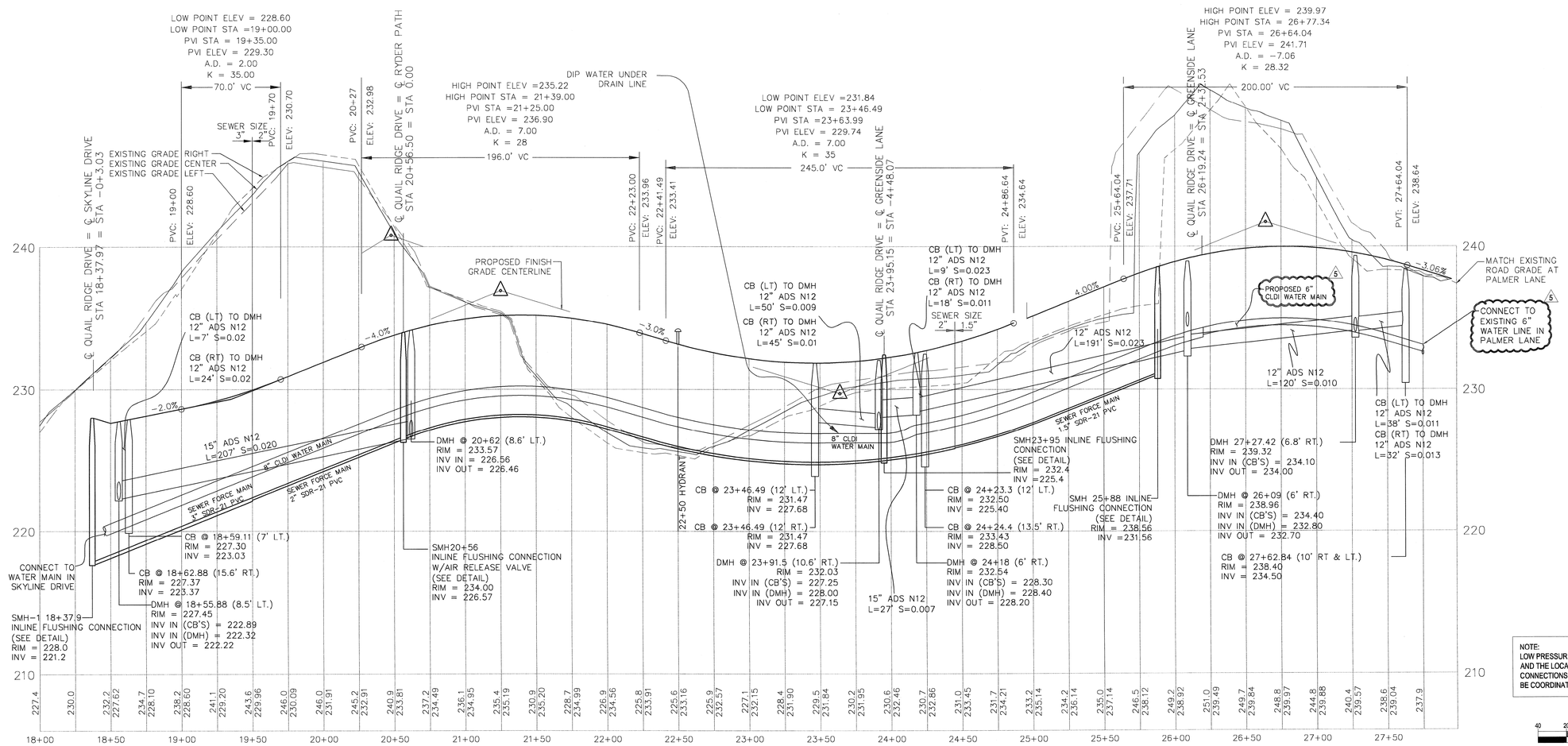

NOTE:
LOW PRESSURE SEWER FORCE MAIN SIZES AND THE LOCATIONS OF FLUSHING CONNECTIONS ARE APPROXIMATE AND SHALL BE COORDINATED WITH MANUFACTURER

BOHLER ENGINEERING

CIVIL & CONSULTING ENGINEERS
SURVEYORS
PROJECT MANAGERS
ENVIRONMENTAL CONSULTANTS
LANDSCAPE ARCHITECTS

CORPORATE OFFICE:
WARREN, NJ

SOUTHBOROUGH, MA
BOWIE, MD
CROSWELL, MI
ALBANY, NY
PORTLAND, OR

CHALFONT, PA
PHILADELPHIA, PA
WILKES-BARRE, PA
WARRINGTON, VA
WEST PALM BEACH, FL
FORT LAUDERDALE, FL
KING OF PRUSSIA, PA

THE INFORMATION, DESIGNS AND CONTENT OF THIS PLAN ARE PROPRIETARY AND SHALL NOT BE COPIED OR USED FOR ANY PURPOSE WITHOUT PRIOR WRITTEN AUTHORIZATION FROM BOHLER ENGINEERING. ONLY APPROVED, SIGNED AND SEALED PLANS SHALL BE VALID FOR CONSTRUCTION PURPOSES. © BOHLER ENGINEERING

REVISIONS

REV	DATE	COMMENT	BY
1	07-01-2011	CON. COMM. SUBMISSION	JAC/ CFD
2	08-21-2011	FOR ENGINEERING REVIEW	NRK
3	10-06-2011	REVISED SKYLINE DRIVE AND ROAD NAME	CFD
4	11-01-2011	BID SET	CFD
5	01-19-2012	DEP SUBMISSION	CFD
6	02-07-2012	UPDATE CONSTRUCTION SET	MAL
7	02-15-2012	UPDATED DETAIL SHEET	MAL
8	03-09-2012	MISC. REVISIONS	CFD
9			

THE FOLLOWING STATES REQUIRE NOTIFICATION BY EXCAVATORS, DESIGNERS, OR ANY PERSON PREPARING TO DISTURB THE EARTH'S SURFACE ANYWHERE IN THE STATE.
(MA, ME, NH, RI, VT 1-888-344-7233)
(CT 1-800-922-4455)
(NY 1-800-962-7962)

ISSUED FOR CONSTRUCTION

PROJECT No.:	W111022
DRAWN BY:	CFD
CHECKED BY:	JAB/SPD
DATE:	05/23/2011
SCALE:	AS NOTED
CAD I.D.:	w111022ss8

PROJECT:

SITE PLAN

FOR

Pulte Homes

THE RESIDENCES AT QUAIL RIDGE

LOCATION OF SITE
354 B GREAT ROAD & SKYLINE DR.
TOWN OF ACTON
MIDDLESEX COUNTY, MA

BOHLER ENGINEERING
352 TURNPIKE ROAD
SOUTHBOROUGH, MA 01772
Phone: (508) 480-9900
Fax: (508) 480-9080
www.BohlerEngineering.com

S.P. DECOURSEY

COMMONWEALTH OF MASSACHUSETTS
STEPHEN P. DeCOURSEY
PROFESSIONAL ENGINEER
No. 38424
MAINE LICENSE No. 7146
NEW HAMPSHIRE LICENSE No. 9368
NEW JERSEY LICENSE No. 24GE02300500
NEW YORK LICENSE No. 077410
CONNECTICUT LICENSE No. 23852
RHODE ISLAND LICENSE No. 7990

SHEET TITLE:

QUAIL RIDGE DRIVE PROFILE

SHEET NUMBER:

26

OF 36

REV 8 - 03/09/2012

CONTRACTOR SHALL BE SENSITIVE WHEN WORKING WITHIN THE TOWN OF CONCORD'S WATER TRANSMISSION EASEMENT AREA. PRIOR TO ANY EARTH MOVING OR EXCAVATIONS OPERATIONS WITH THE EASEMENT AREAS, THE CONTRACTOR SHALL GIVE AT LEAST 24 HOUR NOTICE PRIOR NOTICE TO THE TOWN OF CONCORD WATER AND SEWER DEPARTMENTS AND COORDINATE WITH THEM FOR FIELD VERIFICATION REQUIREMENTS OF THE EXISTING WATER LINE.

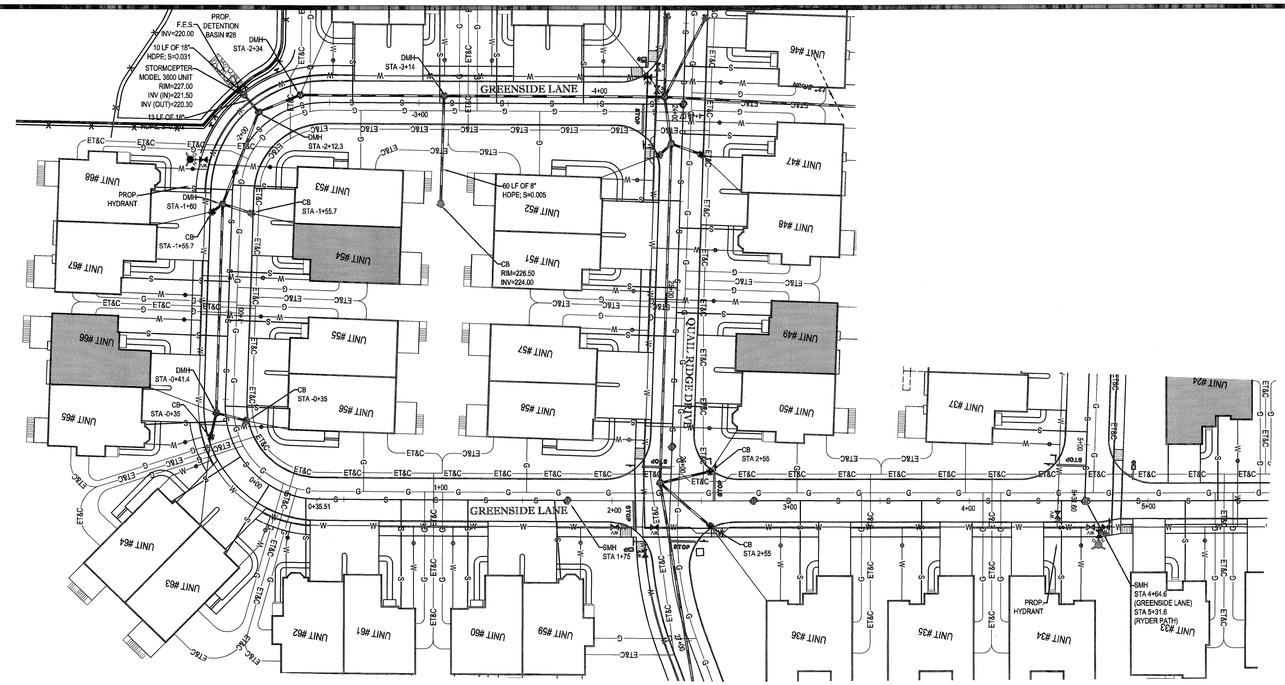

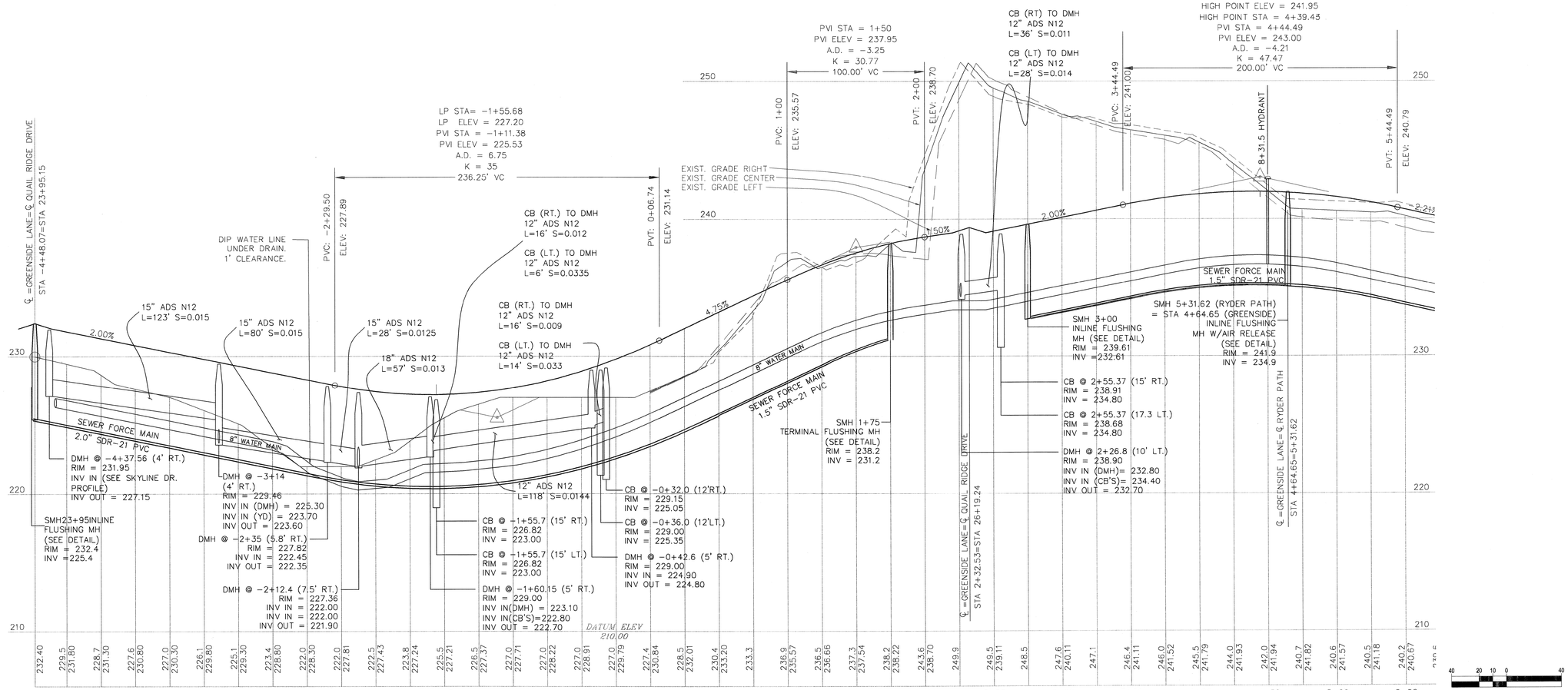

BOHLER ENGINEERING

CORPORATE OFFICE: ♦ FORKED RIVER, NJ

CIVIL & CONSULTING ENGINEERS
SURVEYORS
PROJECT MANAGERS
ENVIRONMENTAL CONSULTANTS
LANDSCAPE ARCHITECTS

♦ SOUTHBOROUGH, MA ♦ BOWIE, MD ♦ ALBANY, NY ♦ ROCHESTER, NY ♦ CENTER VALLEY, PA ♦ CHALFONT, PA ♦ PHILADELPHIA, PA ♦ WILKES-BARRE, PA ♦ WARRENTON, VA ♦ WILLIAMSBURG, VA ♦ TAMPA, FL ♦ FT. LAUDERDALE, FL

THE INFORMATION, DESIGNS AND CONTENT OF THIS PLAN ARE PROPRIETARY AND SHALL NOT BE DISPOSED OR DUPLICATED WITHOUT WRITTEN AUTHORIZATION FROM BOHLER ENGINEERING. ONLY WITH WRITTEN AUTHORIZATION FROM BOHLER ENGINEERING MAY THIS PLAN BE USED FOR CONSTRUCTION PURPOSES. © BOHLER ENGINEERING

REVISIONS

REV	DATE	COMMENT	BY
1	07-01-2011	CON. COMM. SUBMISSION	JAC/ CFD
2	08-21-2011	FOR ENGINEERING REVIEW	NRK
3	10-06-2011	REVISED SKYLINE DRIVE AND ROAD NAME	CFD
4	11-01-2011	BID SET	CFD
5	01-19-2012	DEP SUBMISSION	CFD
6	02-07-2012	UPDATE CONSTRUCTION SET	MAL
7	02-15-2012	UPDATED DETAIL SHEET	MAL
8	03-09-2012	MISC. REVISIONS	CFD
9			

THE FOLLOWING STATES REQUIRE NOTIFICATION BY EXCAVATORS, DESIGNERS, OR ANY PERSON PREPARING TO DISTURB THE EARTH'S SURFACE ANYWHERE IN THE STATE.
(MA, ME, NH, RI, VT 1-888-344-7233)
(CT 1-800-922-4455)
(NY 1-800-962-7962)

ISSUED FOR CONSTRUCTION

PROJECT No.:	W111022
DRAWN BY:	CFD
CHECKED BY:	JAB/SPD
DATE:	05/23/2011
SCALE:	AS NOTED
CAD I.D.:	w111022ss8

PROJECT:

SITE PLAN

FOR

Pulte Homes

THE RESIDENCES AT QUAIL RIDGE

LOCATION OF SITE
354 B GREAT ROAD & SKYLINE DR.
TOWN OF ACTON
MIDDLESEX COUNTY, MA

BOHLER ENGINEERING
352 TURNPIKE ROAD
SOUTHBOROUGH, MA 01772
Phone: (508) 480-9900
Fax: (508) 480-9080
www.BohlerEngineering.com

S.P. DECOURSEY
STEPHEN P. DeCOURSEY CIVIL
PROFESSIONAL ENGINEER
MASSACHUSETTS No. 37878 ♦ NEW HAMPSHIRE No. 9324 ♦ NEW JERSEY No. 40 ♦ NEW YORK No. 075008 ♦ OHIO No. 75404 ♦ PENNSYLVANIA No. 075404 ♦ VERMONT License No. 7119
CONNECTICUT LICENSE No. 23952
RHODE ISLAND LICENSE No. 7990

SHEET TITLE:

GREENSIDE LANE PROFILE "A"

SHEET NUMBER:

27 OF 36

REV 8 - 03/09/2012

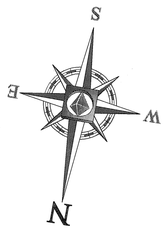

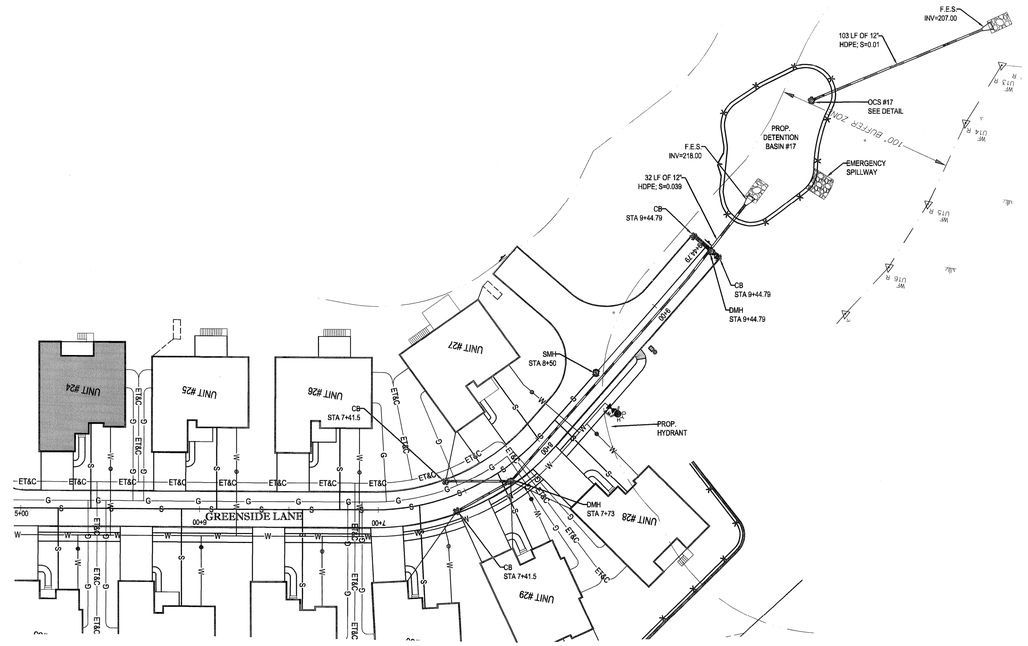

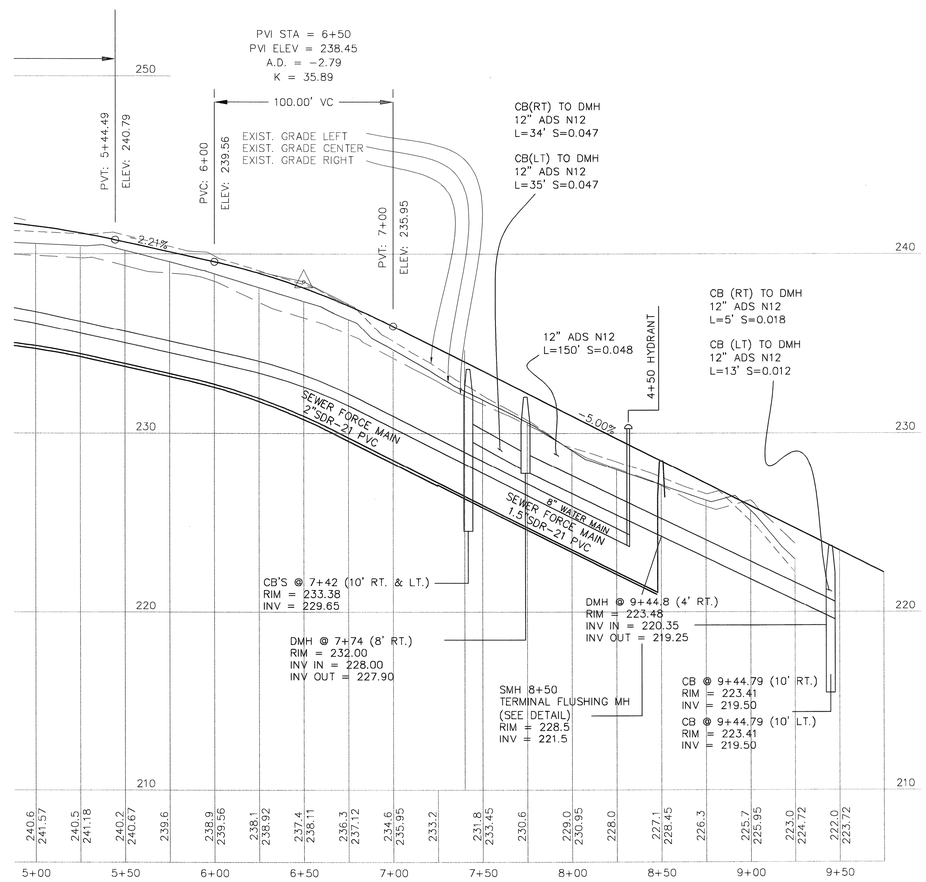

CONTRACTOR SHALL BE SENSITIVE WHEN WORKING WITHIN THE TOWN OF CONCORD'S WATER TRANSMISSION EASEMENT AREA. PRIOR TO ANY EARTH MOVING OR EXCAVATIONS OPERATIONS WITH THE EASEMENT AREAS, THE CONTRACTOR SHALL GIVE AT LEAST 24 HOUR NOTICE PRIOR NOTICE TO THE TOWN OF CONCORD WATER AND SEWER DEPARTMENTS AND COORDINATE WITH THEM FOR FIELD VERIFICATION REQUIREMENTS OF THE EXISTING WATER LINE.

40 20 10 0 40
1"= 40'

P:\111\W111022\DWG\w111022ss8.dwg, 28-Profile-j, 4/23/2010, 10:17:14 AM, jstiernhur, Xerox5316-j.pc3, User:SH, 1:1

BOHLER ENGINEERING

CORPORATE OFFICE:
◆ WARREN, NJ
(908) 754-5405

CIVIL & CONSULTING ENGINEERS
SURVEYORS
PROJECT MANAGERS
ENVIRONMENTAL CONSULTANTS
LANDSCAPE ARCHITECTS

◆ SOUTHBOROUGH, MA
◆ BOWIE, MD
◆ CHARLOTTE, NC
◆ ALBANY, NY
◆ POUGHKEEPSIE, NY
◆ CHALFONT, PA
◆ PHILADELPHIA, PA
◆ PITTSBURGH, PA
◆ WARRENTON, VA
◆ FORT LAUDERDALE, FL
◆ TAMPA, FL

THE INFORMATION, DESIGNS AND CONTENT OF THIS PLAN ARE PROPRIETARY AND SHALL NOT BE COPIED OR USED FOR ANY PURPOSE WITHOUT WRITTEN AUTHORIZATION FROM BOHLER ENGINEERING. ONLY APPROVED, SIGNED AND SEALED PLANS SHALL BE UTILIZED FOR CONSTRUCTION PURPOSES. © 2008 BOHLER ENGINEERING

REVISIONS

REV	DATE	COMMENT	BY
1	07-01-2011	CON. COMM. SUBMISSION	JAC/ CFD
2	08-21-2011	FOR ENGINEERING REVIEW	NRK
3	10-06-2011	REVISED SKYLINE DRIVE AND ROAD NAME	CFD
4	11-01-2011	BID SET	CFD
5	01-19-2012	DEP SUBMISSION	CFD
6	02-07-2012	UPDATE CONSTRUCTION SET	MAL
7	02-15-2012	UPDATED DETAIL SHEET	MAL
8	03-09-2012	MISC. REVISIONS	CFD
9			

THE FOLLOWING STATES REQUIRE NOTIFICATION BY EXCAVATORS, DESIGNERS, OR ANY PERSON PREPARING TO DISTURB THE EARTH'S SURFACE ANYWHERE IN THE STATE.
(MA, ME, NH, RI, VT 1-888-344-7233)
(CT 1-800-922-4455)
(NY 1-800-962-7962)

ISSUED FOR CONSTRUCTION

PROJECT No.:	W111022
DRAWN BY:	CFD
CHECKED BY:	JAB/SPD
DATE:	05/23/2011
SCALE:	AS NOTED
CAD I.D.:	w111022ss8

PROJECT:

SITE PLAN

FOR

Pulte Homes

THE RESIDENCES AT QUAIL RIDGE

LOCATION OF SITE
354 B GREAT ROAD & SKYLINE DR.
TOWN OF ACTON
MIDDLESEX COUNTY, MA

BOHLER ENGINEERING
352 TURNPIKE ROAD
SOUTHBOROUGH, MA 01772
Phone: (508) 480-9900
Fax: (508) 480-9080
www.BohlerEngineering.com

S.P. DECOURSEY
STEPHEN P. DeCOURSEY
CIVIL
No. 30124
PROFESSIONAL ENGINEER
MASSACHUSETTS LICENSE No. 30124
NEW HAMPSHIRE LICENSE No. 9308
MARYLAND LICENSE No. 26506
VERMONT LICENSE No. 7110
CONNECTICUT LICENSE No. 23662
RHODE ISLAND LICENSE No. 7590

SHEET TITLE:

GREENSIDE LANE PROFILE "B"

SHEET NUMBER:

28

OF 36

REV 8 - 03/09/2012

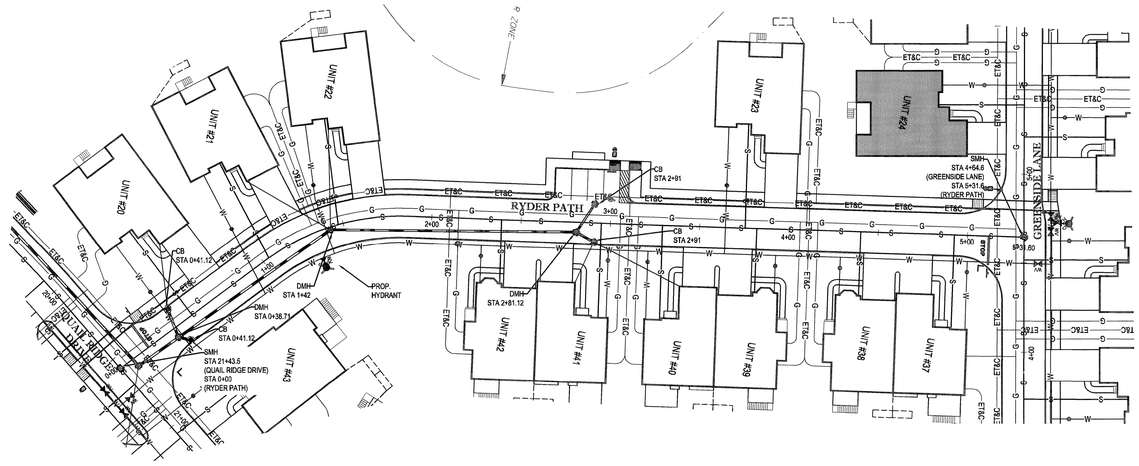

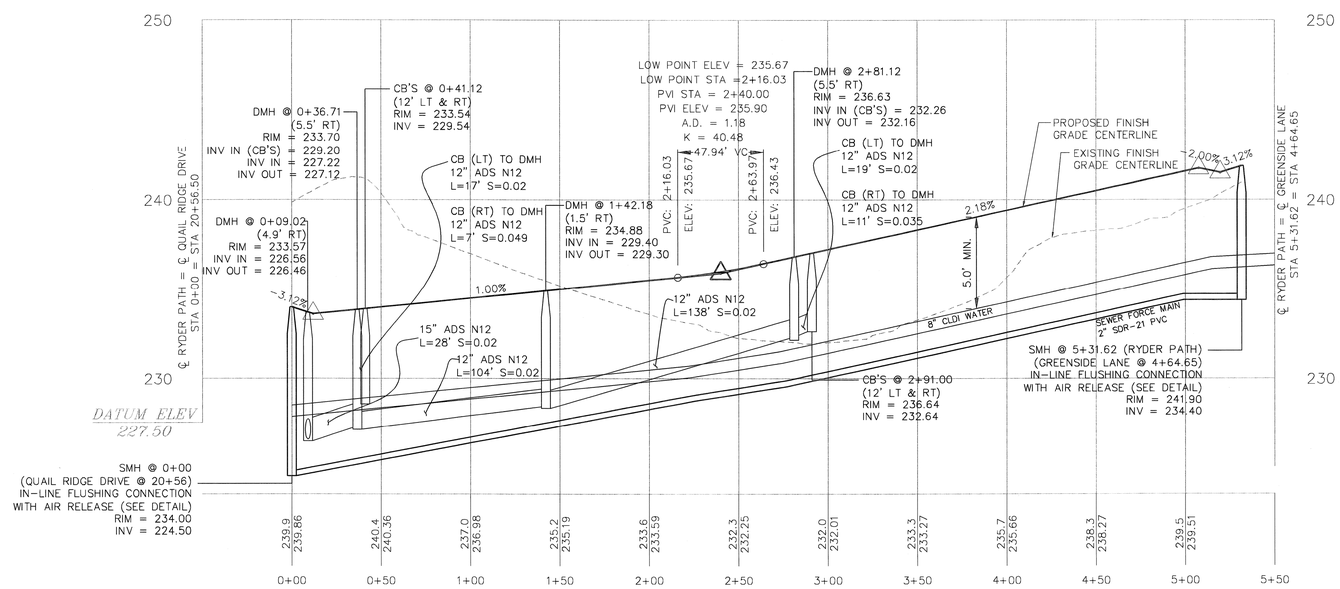

CONTRACTOR SHALL BE SENSITIVE WHEN WORKING WITHIN THE TOWN OF CONCORD'S WATER TRANSMISSION EASEMENT AREA. PRIOR TO ANY EARTH MOVING OR EXCAVATIONS OPERATIONS WITH THE EASEMENT AREAS, THE CONTRACTOR SHALL GIVE AT LEAST 24 HOUR NOTICE PRIOR NOTICE TO THE TOWN OF CONCORD WATER AND SEWER DEPARTMENTS AND COORDINATE WITH THEM FOR FIELD VERIFICATION REQUIREMENTS OF THE EXISTING WATER LINE.

40 20 10 0 40
1"= 40'

P:\111\W111022\DWG\w111022sdb.dwg, 29-Profile P, 4/23/2010, 10:17:14 AM, petersheur, XerxPS10.0.1.pc3, User434, 1:1

BOHLER ENGINEERING

CORPORATE OFFICE:
♦ WARREN, NJ
OTHER OFFICES:
♦ SOUTHBOROUGH, MA ♦ CHALFONT, PA
♦ BOWIE, MD ♦ PHILADELPHIA, PA
♦ ROCKVILLE, MD ♦ PITTSBURGH, PA
♦ ALBANY, NY ♦ WARRENTON, VA
♦ HONOLULU, HI ♦ WILLIAMSBURG, VA
♦ PIONEER VALLEY, PA ♦ TAMPA / LAUDERDALE, FL

CIVIL & CONSULTING ENGINEERS
SURVEYORS
PROJECT MANAGERS
ENVIRONMENTAL CONSULTANTS
LANDSCAPE ARCHITECTS

THE INFORMATION, DESIGNS AND CONTENT OF THIS PLAN ARE PROPRIETARY AND SHALL NOT BE COPIED OR USED FOR ANY PURPOSE WITHOUT PRIOR WRITTEN AUTHORIZATION FROM BOHLER ENGINEERING. ONLY APPROVED, SIGNED AND SEALED PLANS SHALL BE VALID FOR CONSTRUCTION PURPOSES. © BOHLER ENGINEERING

REVISIONS

REV	DATE	COMMENT	BY
1	07-01-2011	CON. COMM. SUBMISSION	JAC/
2	08-21-2011	FOR ENGINEERING REVIEW	NRK
3	10-06-2011	REVISED SKYLINE DRIVE AND ROAD NAME	CFD
4	11-01-2011	BID SET	CFD
5	01-19-2012	DEP SUBMISSION	CFD
6	02-07-2012	UPDATE CONSTRUCTION SET	MAL
7	02-15-2012	UPDATED DETAIL SHEET	MAL
8	03-09-2012	MISC. REVISIONS	CFD
9			

THE FOLLOWING STATES REQUIRE NOTIFICATION BY EXCAVATORS, DESIGNERS, OR ANY PERSON PREPARING TO DISTURB THE EARTH'S SURFACE ANYWHERE IN THE STATE:
(MA, ME, NH, RI, VT 1-888-344-7233)
(CT 1-800-922-4455)
(NY 1-800-962-7962)

ISSUED FOR CONSTRUCTION

PROJECT No.:	W111022
DRAWN BY:	CFD
CHECKED BY:	JAB/SPD
DATE:	05/23/2011
SCALE:	AS NOTED
CAD I.D.:	w11102Zss8

PROJECT:

SITE PLAN

FOR

Pulte Homes

THE RESIDENCES AT QUAIL RIDGE

LOCATION OF SITE
354 B GREAT ROAD & SKYLINE DR.
TOWN OF ACTON
MIDDLESEX COUNTY, MA

BOHLER ENGINEERING
352 TURNPIKE ROAD
SOUTHBOROUGH, MA 01772
Phone: (508) 480-9900
Fax: (508) 480-9080
www.BohlerEngineering.com

S.P. DECOURSEY
COMMONWEALTH OF MASSACHUSETTS
STEPHEN P. DeCOURSEY
CIVIL
No. 36424
PROFESSIONAL ENGINEER
MASSACHUSETTS LICENSE No. 36424
NEW HAMPSHIRE LICENSE No. 9308
MAINE LICENSE No. 6482 5408
VERMONT LICENSE No. 7110
CONNECTICUT LICENSE No. 23962
RHODE ISLAND LICENSE No. 7990

SHEET TITLE:

RYDER PATH PROFILE

SHEET NUMBER:

29

OF 36

REV 8 - 03/09/2012

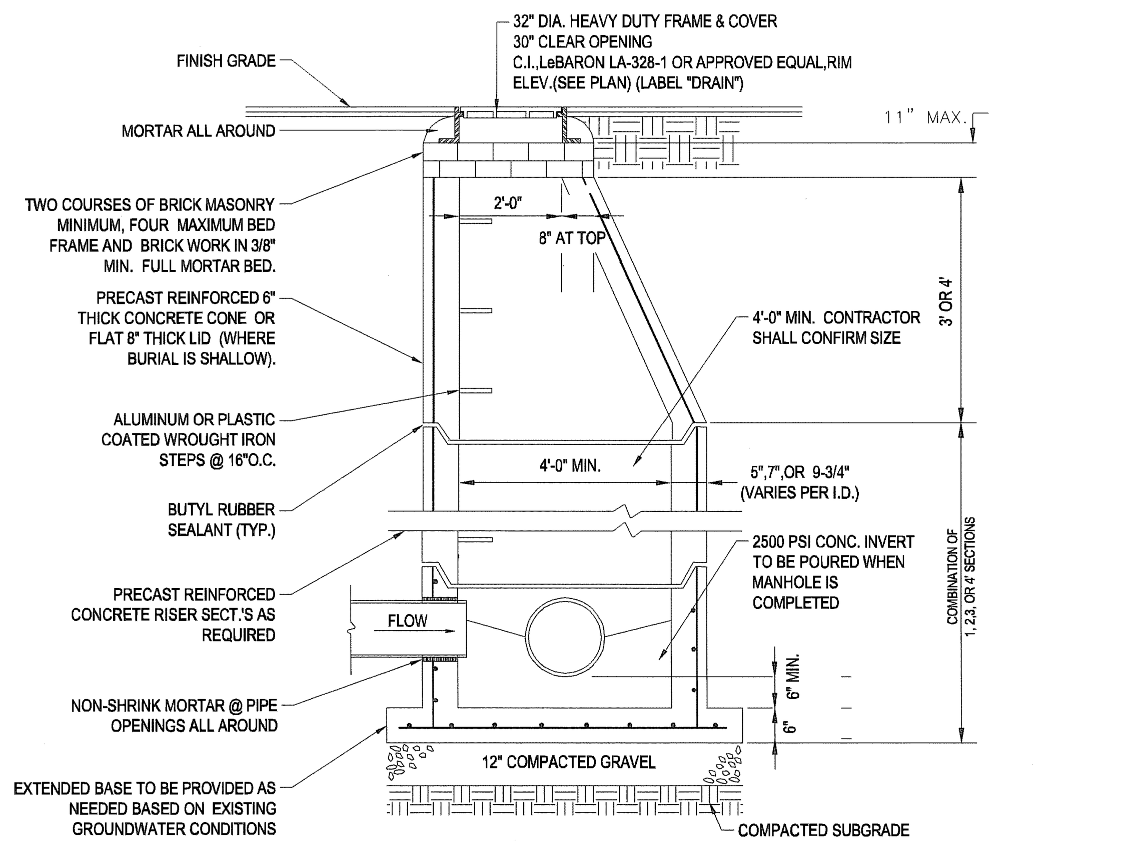

TYP. PRECAST CONCRETE STORM DRAIN MANHOLE

N.T.S.

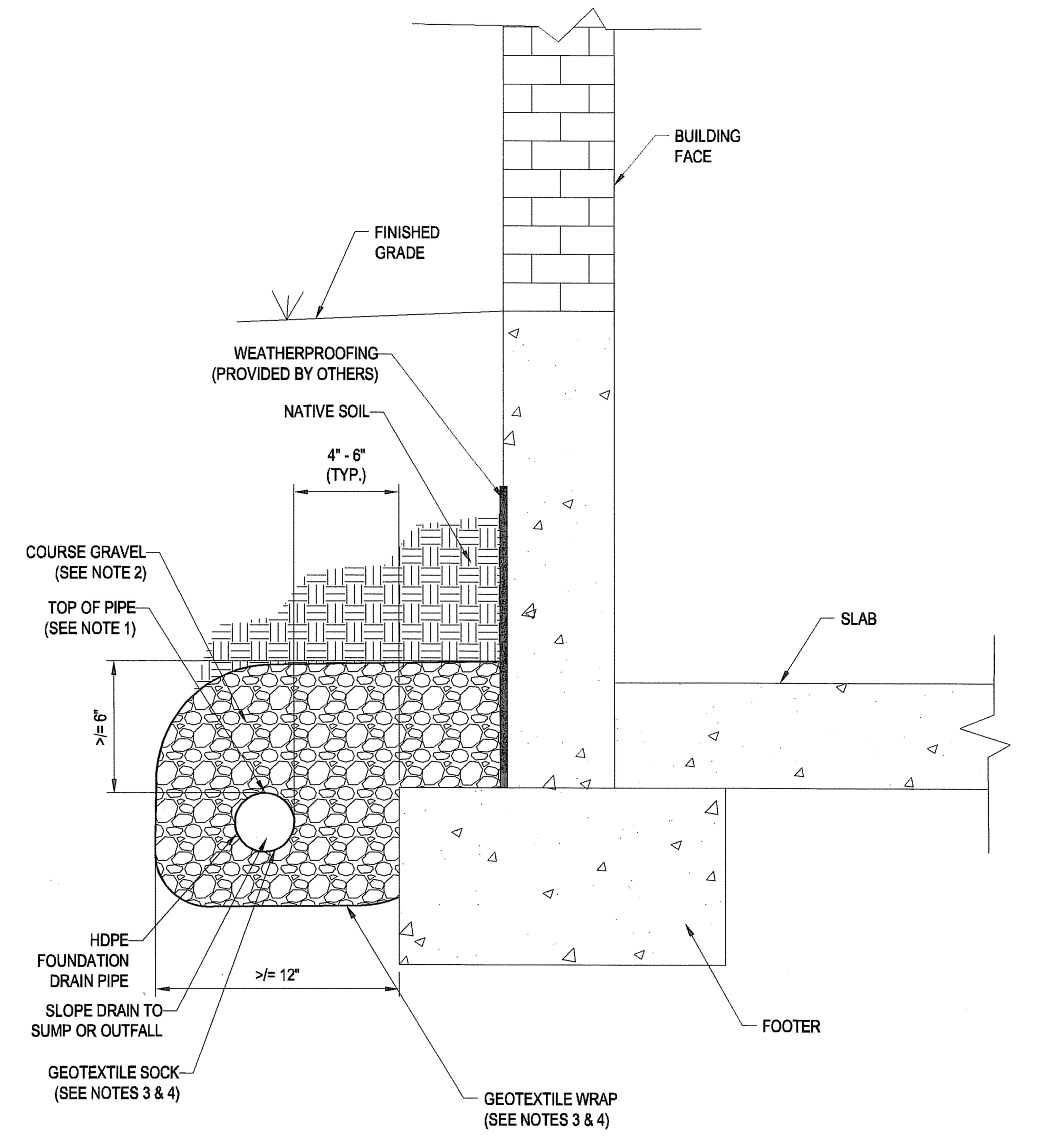

NOTES:
1. TOP OF PERFORATED PIPE MUST BE AT OR BELOW THE TOP OF FOOTING.
2. BACKFILL MUST BE SIZED AT LEAST ONE SIEVE SIZE (ROCK SIZE) LARGER THAN DIMENSIONS OF PERFORATIONS, OTHERWISE A GEOTEXTILE WRAP AROUND THE PIPE IS REQUIRED.
3. FOR NATIVE SOIL WITH HIGH SAND CONTENT, A GEOTEXTILE BETWEEN THE BACKFILL AND NATIVE SOIL SHOULD BE USED. FOR NATIVE SOIL WHERE THE CLAY CONTENT EXCEEDS 50% OR THE SILT CONTENT EXCEEDS 40%, A GEOTEXTILE IS NOT REQUIRED AROUND THE PIPE.
4. FOR NATIVE SOIL WITH LESS THAN 50% PASSING THE NO. 200 SIEVE, THE APPARENT OPENING SIZE (AOS) OF THE FABRIC SHOULD BE AT LEAST A NO. 30 SIEVE. FOR NATIVE SOIL WITH MORE THAN 50% PASSING THE NO. 200 SIEVE, THE AOS OF THE FABRIC SHOULD BE AT LEAST A NO. 50 SIEVE.
5. IF VEHICULAR LOADS ARE EXPECTED, A MINIMUM OF 12-INCHES OF COVER IS REQUIRED OVER THE TOP OF THE PIPE.

FOUNDATION DRAIN DETAIL

N.T.S.

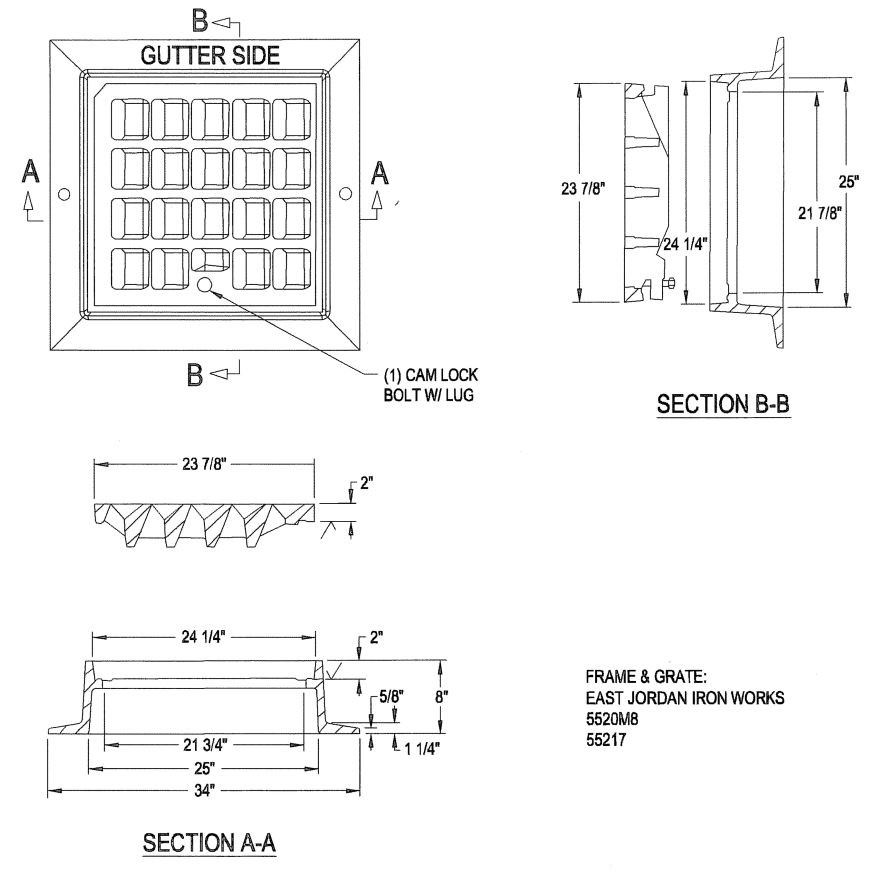

FRAME & GRATE:
EAST JORDAN IRON WORKS
5520M8
55217

NOTES:
1. H-20 LOADING RATE
2. REFERENCE MHD STANDARD DETAIL E 201.7.1
3. DETAILS AS SHOWN ARE FOR FLOW FROM RIGHT. GRATES SHALL BE ADJUSTED FOR FLOW FROM LEFT WHERE APPLICABLE

MASSDOT CASCADE GRATE DETAIL

N.T.S.

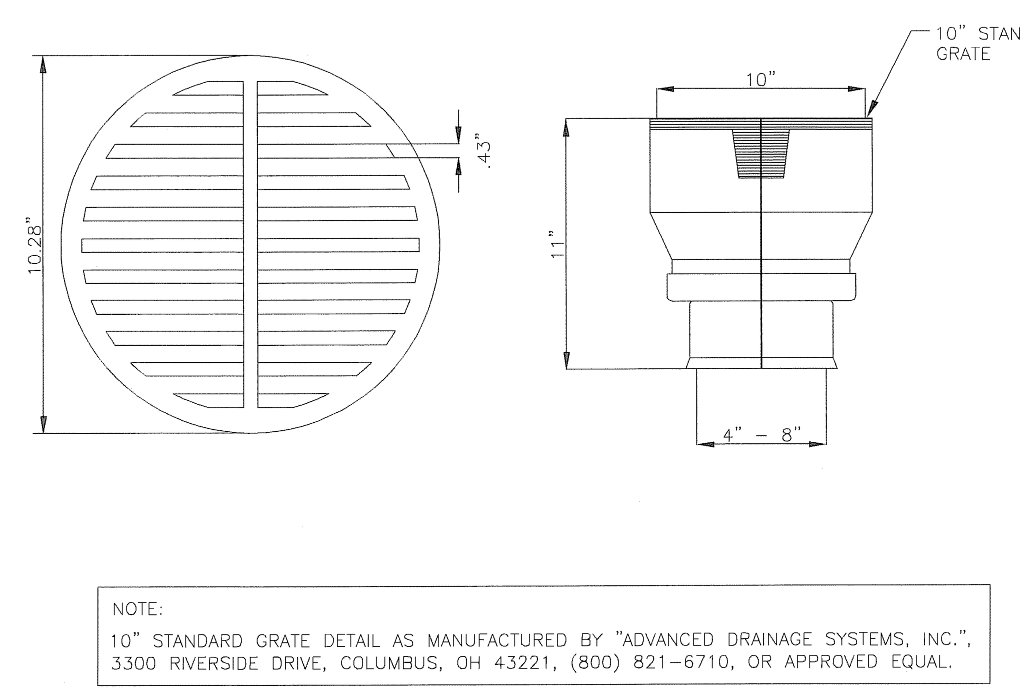

YARD DRAIN DETAIL

N.T.S.

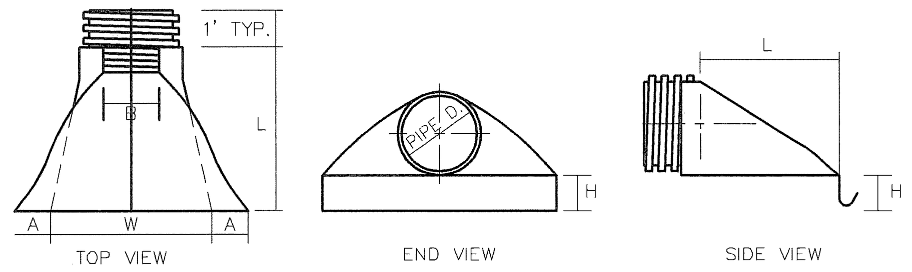

PIPE DIAMETER	DIMENSION (inches)					
	PART NO.	A(1±)	B MAX	H(1±)	L(1/2±)	W(2±)
12" and 15"	1210 NP	6.5	10	6.5	25	29
18"	1810 NP	7.5	15	6.5	32	35
24"	2410 NP	7.5	18	6.5	36	45
36"	3610 NP	10.5	NA	7.0	53	68

ADS END SECTION DIMENSIONS

NOT TO SCALE

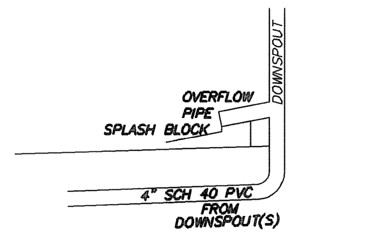

DOWNSPOUT DETAIL

NOT TO SCALE

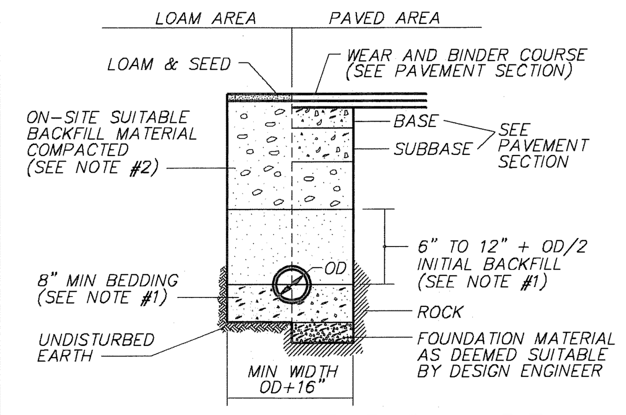

NOTES:
1. 3/4" SCREENED GRAVEL COMPACTED IN 6" MAX LIFTS TO AT LEAST 90% OF STANDARD PROCTOR DENSITY.

3/4" SCREENED GRAVEL REQUIREMENTS:

SIEVE SIZE	% FINER BY WEIGHT
1"	100
3/4"	90 – 100
1/2"	20 – 50
3/8"	0 – 20
#4	0 – 5

2. BACKFILL MATERIAL BELOW PAVED OR LOAM AREAS COMPACTED IN 6" MAX LIFTS TO NOT LESS THAN 90% OF STANDARD PROCTOR DENSITY, WITH STONES NO LARGER THAN 6 INCHES.

TYPICAL DRAIN TRENCH DETAIL

NOT TO SCALE

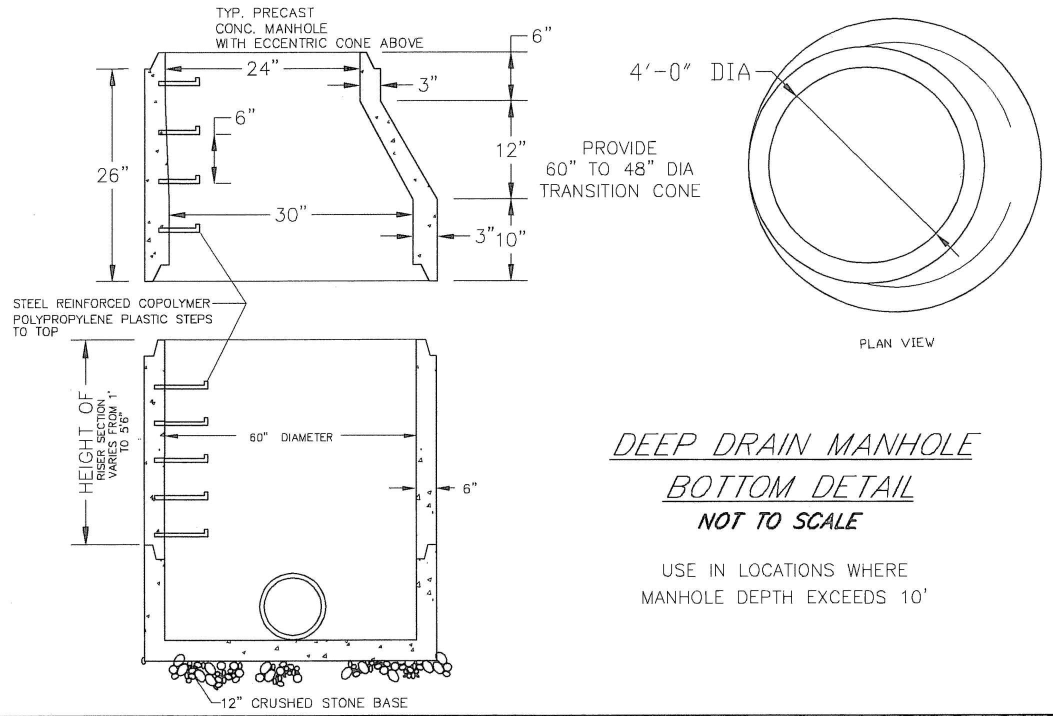

DEEP DRAIN MANHOLE BOTTOM DETAIL

NOT TO SCALE

USE IN LOCATIONS WHERE MANHOLE DEPTH EXCEEDS 10'

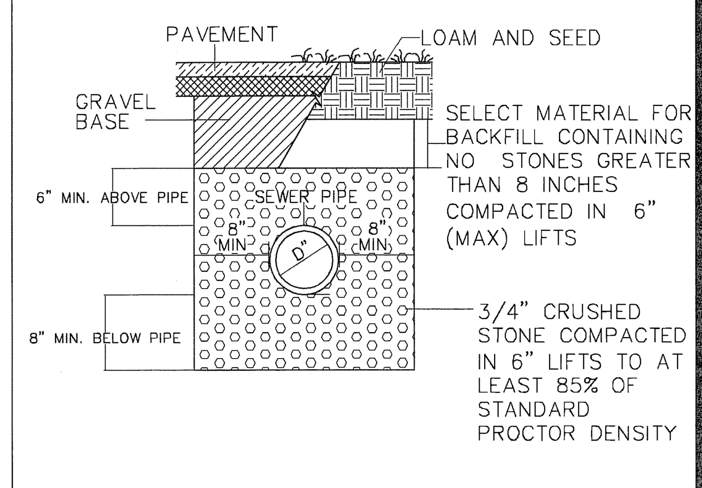

TYPICAL SEWER TRENCH DETAIL

NOT TO SCALE

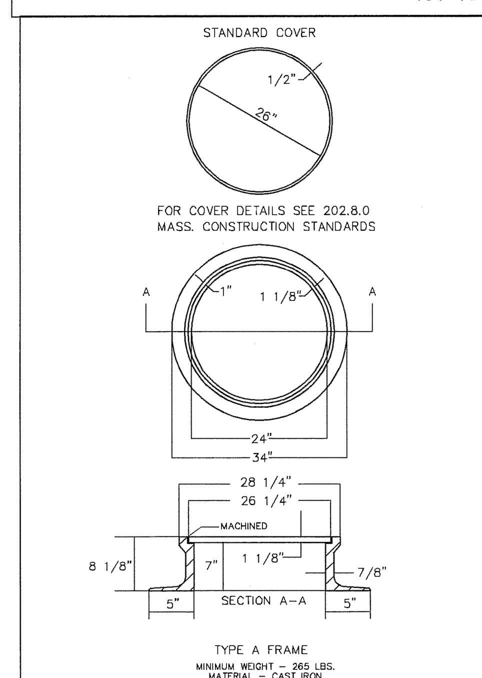

MANHOLE FRAME AND COVER

NOT TO SCALE

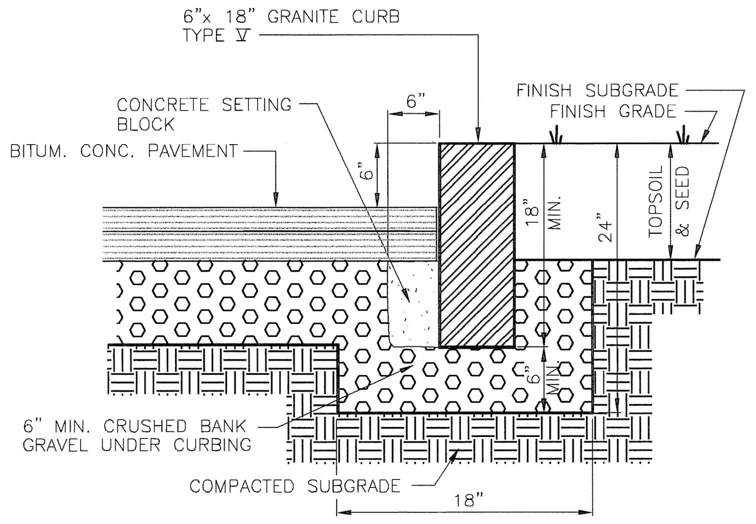

TYPICAL VERTICAL GRANITE CURB

NOT TO SCALE

NOTE:
INSTALL VERTICAL GRANITE CURBING TO BE USED AT CULVERT CROSS, QUAILRIDGE DRIVE STA 9+15 TO STA 12+55 BOTH SIDES

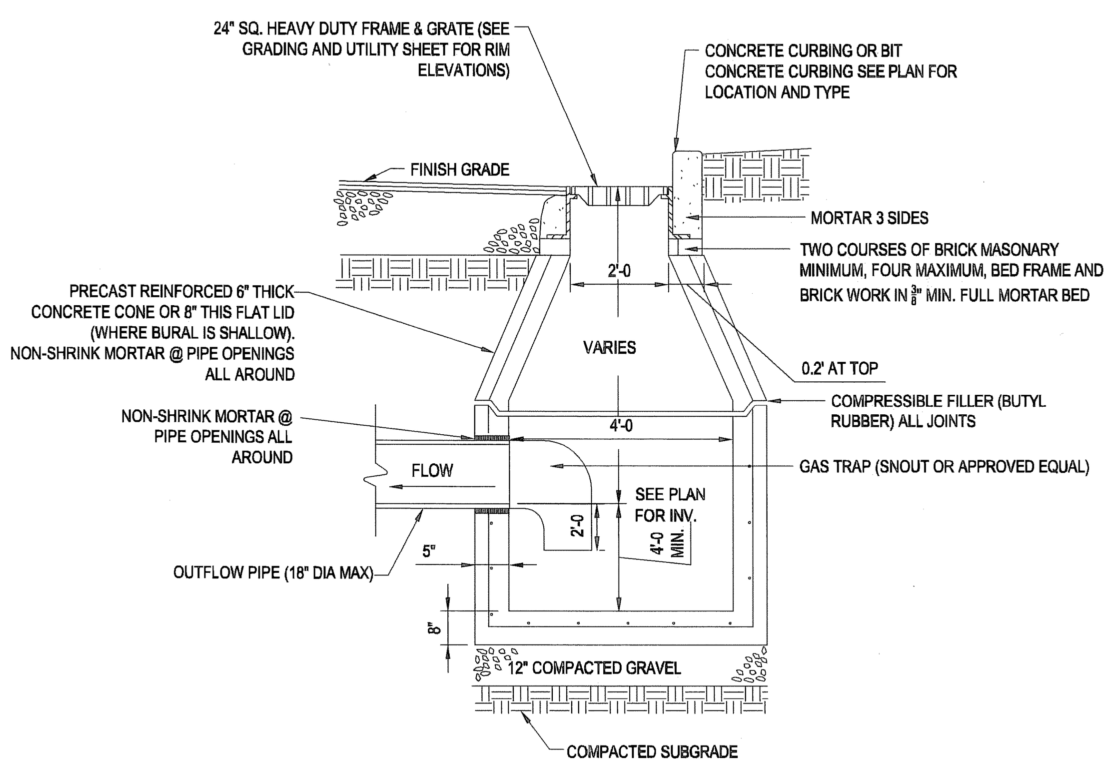

NOTES:
1. ALL STRUCTURES SHALL BE SUITABLE FOR H-20 LOADING AND SHALL MEET THE REQUIREMENTS OF ASTM C478.
2. USE PRECAST FLAT SLAB TOP FOR SHALLOW INVERT APPLICATIONS

PRECAST CONCRETE DEEP SUMP CATCH BASIN

N.T.S.

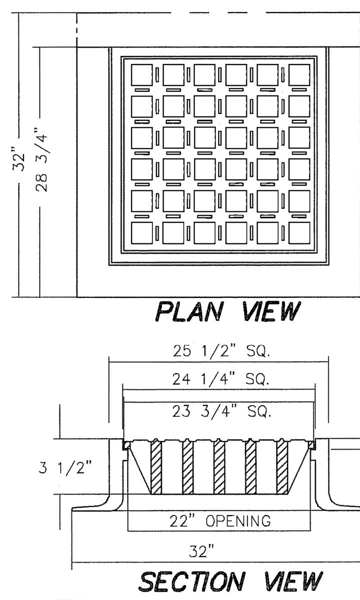

FRAME: LEBARON LF244-2 (4 FLANGE) REF. MHD 201.6.0
GRATE: LEBARON LA24SG17 OR APPROVED EQUALS. USE MASSDOT CASCADE GRATE WHERE GRADES ARE IN EXCESS OF 5% (SEE DETAIL)

NOTES
FULLY MACHINED AND INTERCHANGABLE FRAMES AND COVERS.
HIGH QUALITY MATERIALS AND WORKMANSHIP.
COAL TAR EPOXY PAINTED.
NO ROCK COVERS.
H-20 LOADING RATE
WEIGHT OF GRATE: 215 LBS.
WEIGHT OF FRAME: 4 FLANGES – 295 LBS
REFERENCE MHD STANDARD DETAIL 201.6.0

TYPICAL CATCH BASIN FRAME AND GRATE

NOT TO SCALE

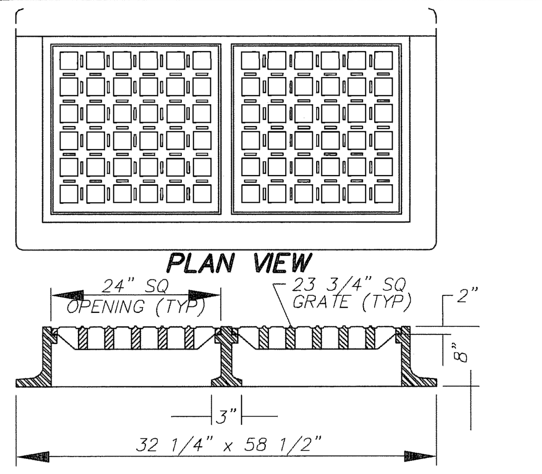

SECTION VIEW
FRAME: LEBARON LV2448-2 GRATE: LEBARON L24SG1 (USE 2 GRATES) OR APPROVED EQUALS. USE MASSDOT CASCADE GRATE WHERE GRADES ARE IN EXCESS OF 5% (SEE DETAIL)

DOUBLE CATCH BASIN

NOTES
FULLY MACHINED AND INTERCHANGABLE FRAMES AND COVERS.
HIGH QUALITY MATERIALS AND WORKMANSHIP.
COAL TAR EPOXY PAINTED.
NO ROCK COVERS.
H-20 LOADING RATE
3 FLANGE FRAMES TO BE USED WITH CURB INLET

DOUBLE CATCH BASIN FRAME

INSTALL AT CB'S @ STA. 10+89 & 10+90 ON SKYLINE DRIVE

NOT TO SCALE

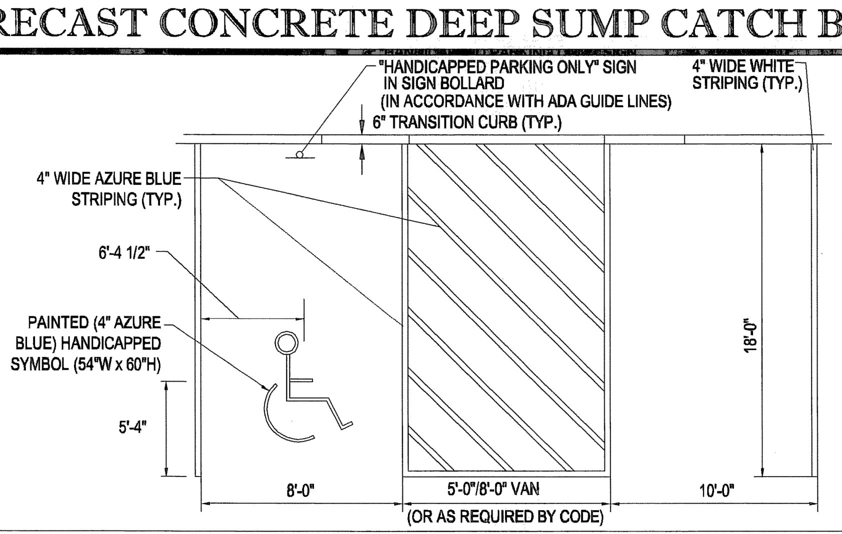

NOTE: ALL PAVEMENT STRIPING AND MARKINGS SHALL CONSIST OF CHLORINATED RUBBER PAINT APPLIED TO A DRY SURFACE WHEN THE TEMPERATURE IS GREATER THAN 40°F. PAINT SHALL BE APPLIED AT A MINIMUM OF 0.015" (15 MIL) FILM THICKNESS

HANDICAPPED STALL MARKINGS & PARKING LOT STRIPING DETAIL

N.T.S.

DISABLED PARKING SIGN
1.) 12"x18", 5' TO BOTTOM OF SYMBOL
2.) LOCATED SO THAT IT CANNOT BE OBSCURED BY A CAR PARKED IN THE SPACE. (2' BEHIND CURB OR 2' BEHIND WALK, AS APPLICABLE)
3.) CONFORM TO LOCAL CODES

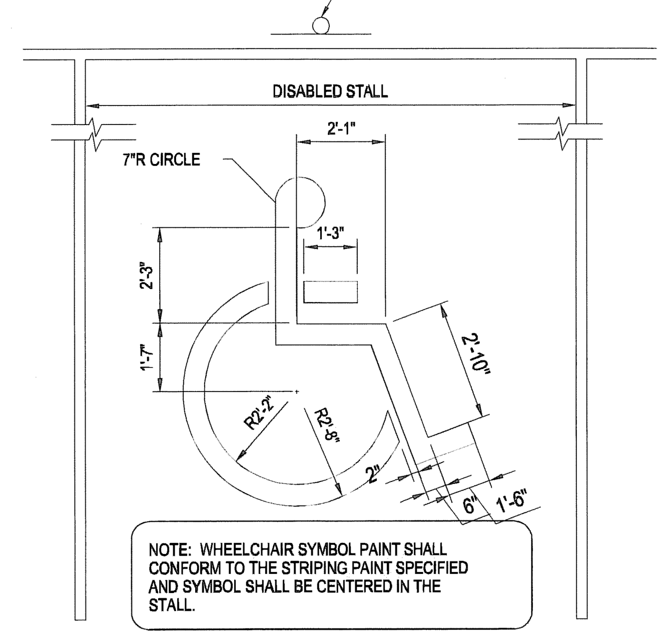

NOTE: WHEELCHAIR SYMBOL PAINT SHALL CONFORM TO THE STRIPING PAINT SPECIFIED AND SYMBOL SHALL BE CENTERED IN THE STALL.

DISABLED SPACE PARKING PAINTING DETAIL

N.T.S.

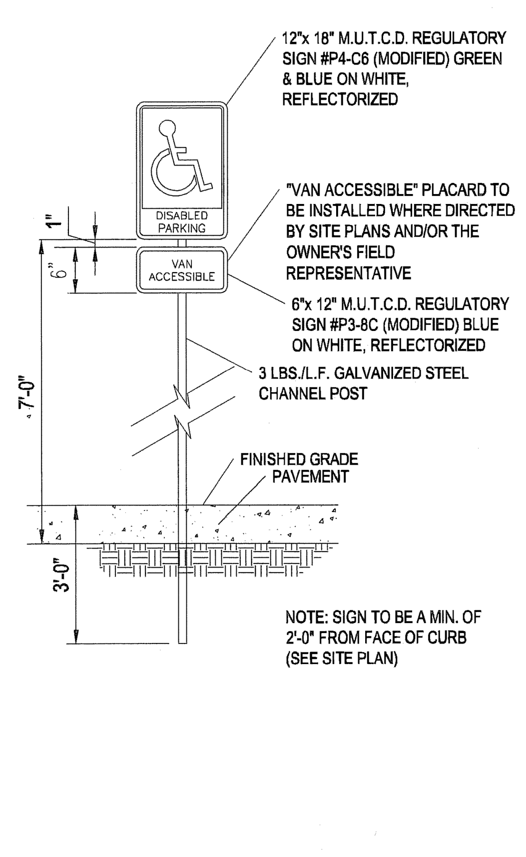

12"x 18" M.U.T.C.D. REGULATORY SIGN #P4-C6 (MODIFIED) GREEN & BLUE ON WHITE, REFLECTORIZED

"VAN ACCESSIBLE" PLACARD TO BE INSTALLED WHERE DIRECTED BY SITE PLANS AND/OR THE OWNER'S FIELD REPRESENTATIVE

6"x 12" M.U.T.C.D. REGULATORY SIGN #P3-8C (MODIFIED) BLUE ON WHITE, REFLECTORIZED

3 LBS./L.F. GALVANIZED STEEL CHANNEL POST

FINISHED GRADE PAVEMENT

NOTE: SIGN TO BE A MIN. OF 2'-0" FROM FACE OF CURB (SEE SITE PLAN)

'HANDICAP PARKING ONLY' SIGN

N.T.S.

BOHLER ENGINEERING

CIVIL & CONSULTING ENGINEERS
SURVEYORS
PROJECT MANAGERS
ENVIRONMENTAL CONSULTANTS
LANDSCAPE ARCHITECTS

CORPORATE OFFICE:
◆ WARREN, NJ

OFFICES:
◆ SOUTHBOROUGH, MA ◆ CHALFONT, PA
◆ BOWIE, MD ◆ PHILADELPHIA, PA
◆ TOWSON, MD ◆ STERLING, VA
◆ ALBANY, NY ◆ WARRENTON, VA
◆ RONKONKOMA, NY ◆ FORT LAUDERDALE, FL
◆ CENTER VALLEY, PA ◆ TAMPA, FL

REVISIONS

REV	DATE	COMMENT	BY
1	07-01-2011	CON. COMM. SUBMISSION	JAC/CFD
2	08-21-2011	FOR ENGINEERING REVIEW	NRK
3	10-06-2011	REVISED SKYLINE DRIVE AND ROAD NAME	CFD
4	11-01-2011	BID SET	CFD
5	01-19-2012	DEP SUBMISSION	CFD
6	02-07-2012	UPDATE CONSTRUCTION SET	MAL
7	02-15-2012	UPDATED DETAIL SHEET	MAL
8	03-09-2012	MISC. REVISIONS	CFD
9			

THE FOLLOWING STATES REQUIRE NOTIFICATION BY EXCAVATORS, DESIGNERS, OR ANY PERSON PREPARING TO DISTURB THE EARTH'S SURFACE ANYWHERE IN THE STATE.
(MA, ME, NH, RI, VT 1-888-344-7233)
(CT 1-800-922-4455)
(NY 1-800-962-7962)

ISSUED FOR CONSTRUCTION

PROJECT No.:	W111022
DRAWN BY:	CFD
CHECKED BY:	JAB/SPD
DATE:	05/23/2011
SCALE:	AS NOTED
CAD I.D.:	w111022ss8_details

PROJECT:

SITE PLAN
FOR
Pulte Homes
THE RESIDENCES AT QUAIL RIDGE
LOCATION OF SITE
354 B GREAT ROAD & SKYLINE DR.
TOWN OF ACTON
MIDDLESEX COUNTY, MA

BOHLER ENGINEERING
352 TURNPIKE ROAD
SOUTHBOROUGH, MA 01772
Phone: (508) 480-9900
Fax: (508) 480-9080
www.BohlerEngineering.com

S.P. DECOURSEY
PROFESSIONAL ENGINEER
CONNECTICUT LICENSE No. 23662
RHODE ISLAND LICENSE No. 7990

SHEET TITLE:
CONSTRUCTION DETAILS SHEET

SHEET NUMBER:
30
OF 36

REV 8 - 03/09/2012

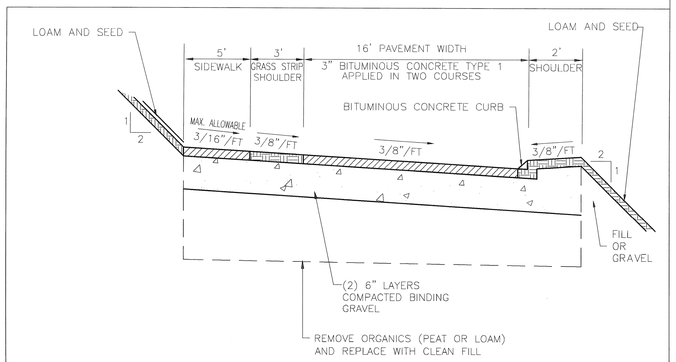

THE 3' WIDE SHOULDER ON EACH SIDE SHALL BE FREE OF OBSTRUCTIONS SUCH AS TREES OR UTILITY POLES.
THE SHOULDER SHALL BE PREPARED WITH TOPSOIL OVER THE SAME GRAVEL BASE AS THE WEAR SURFACE, AND SEEDED.
THE SHOULDER, AND ALL EXPOSED AREAS SHALL BE LOAMED AND SEEDED.

ACCESSWAY CROSS-SECTION

NOT TO SCALE

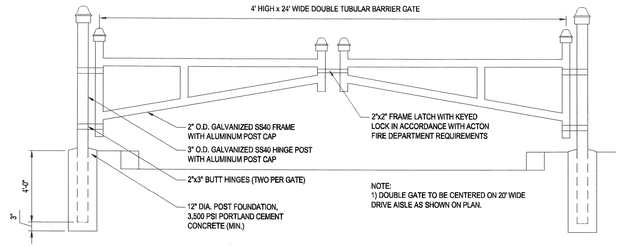

NOTE: KEY TO BE PLACED IN LOCK BOX ATTACHED TO POST. LOCK BOX TO BE COORDINATED WITH THE FIRE DEPARTMENT

EMERGENCY GATE

NOT TO SCALE

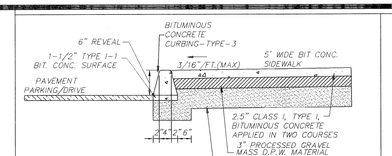

BITUMINOUS CONCRETE SIDEWALK AND BIT. CONC. CURBING TYPE-3 DETAIL

NOT TO SCALE

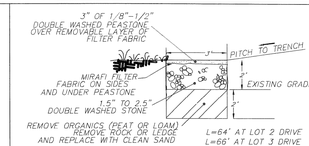

INFILTRATION TRENCH DETAIL

NOT TO SCALE

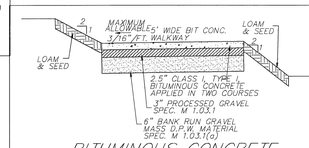

BITUMINOUS CONCRETE WALKWAY DETAIL

(FOR SIDEWALK CONNECTIONS TO EXTENSION PATHS)

NOT TO SCALE

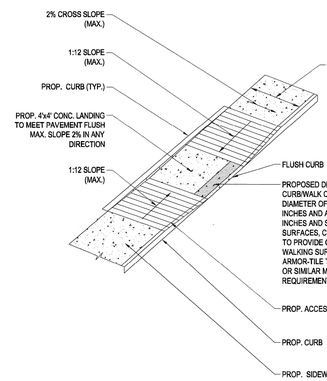

ACCESSIBLE RAMP

N.T.S.

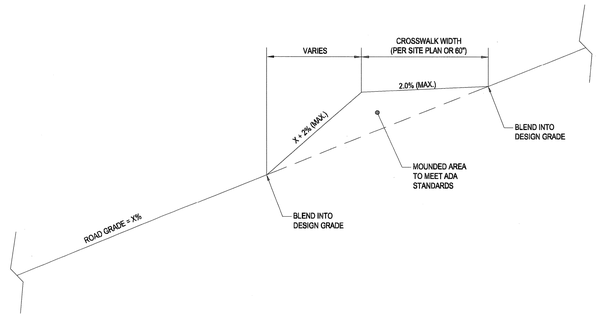

CROSSWALK SECTION FOR ROAD GRADES >2%

NOT TO SCALE

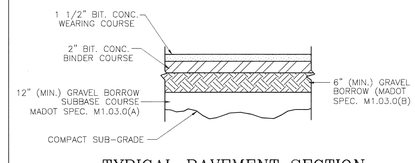

TYPICAL PAVEMENT SECTION

NOT TO SCALE

*BINDER COURSE SHALL BE EXPOSED TO ONE WINTER SEASON (NOVEMBER 15 - APRIL 30) PRIOR TO THE APPLICATION OF THE WEARING COURSE.

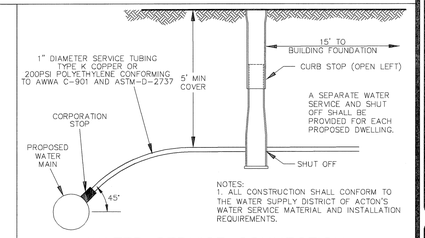

NOTES:
1. ALL CONSTRUCTION SHALL CONFORM TO THE WATER SUPPLY DISTRICT OF ACTON'S WATER SERVICE MATERIAL AND INSTALLATION REQUIREMENTS.

WATER SERVICE CONNECTION

NOT TO SCALE

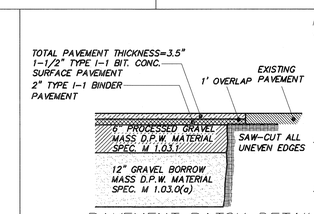

NOTES:
1. A 1 1/2" TEMPORARY PATCH COURSE OVER THE ENTIRE EXCAVATED AREA (BIT-CONC. TYPE I-1 HOT TOP) IS TO BE LEFT IN PLACE FOR AT LEAST ONE MONTH AND NOT MORE THAN THREE MONTHS, UNTIL NO FURTHER SETTLING CAN BE REASONABLY EXPECTED. THIS SHALL THEN BE REMOVED. ANY UNEVEN EDGES OF EXISTING PAVEMENT WILL BE CUT VERTICALLY WITH AN APPROVED POWER TOOL AND TACK COATED WITH ASPHALT EMULSION (RC-2).
2. IF EXISTING PAVEMENT IS OF A GREATER DEPTH THAN PATCHING REQUIREMENTS, THE PATCH SHALL BE OF THE SAME DEPTH. AT NO TIME SHOULD THE BIT. CONC. BE LAID IN LAYERS GREATER THAN 2 1/2".
3. WHEN THE PATCH IS COMPLETE, THE JOINTS SHOULD BE PAINTED WITH AN RC-2 AND SEALED WITH SAND.
4. THE REQUIREMENTS OF THIS DETAIL SHALL BE EMPLOYED AT ALL POINTS WHERE PROPOSED PAVEMENT ENCOUNTERS EXISTING PAVEMENT.

PAVEMENT PATCH DETAIL

NOT TO SCALE

PVMNTPTCH_ACTON.DWG

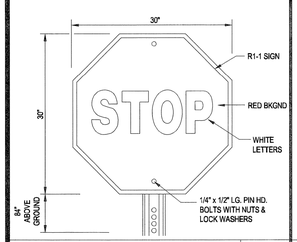

STOP SIGN

N.T.S.

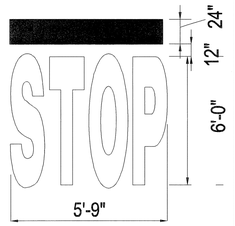

"STOP" BAR DETAIL

N.T.S.

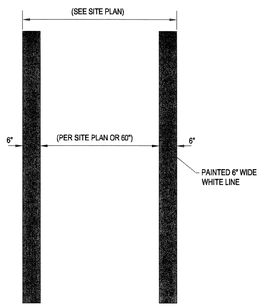

CROSSWALK DETAIL

N.T.S.

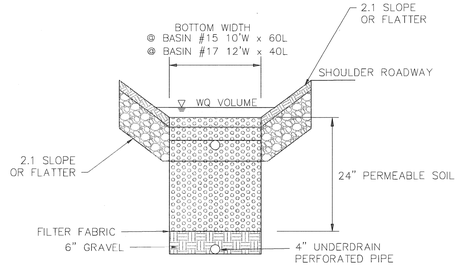

WATER QUALITY SWALE

NOT TO SCALE

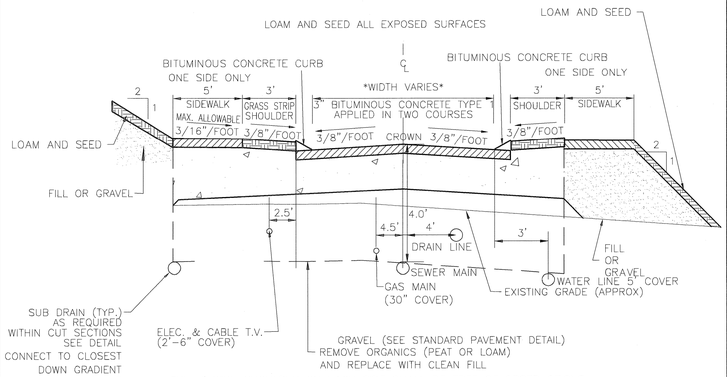

THE 3' WIDE SHOULDER ON EACH SIDE SHALL BE FREE OF OBSTRUCTIONS THE SHOULDER SHALL BE PREPARED WITH TOPSOIL OVER THE SAME GRAVEL BASE AS THE WEAR SURFACE, AND SEEDED. THE SHOULDER, AND ALL EXPOSED AREAS SHALL BE LOAMED AND SEEDED. DIMENSIONS BETWEEN UTILITIES TO BE USED AS GENERAL GUIDELINE. SEE UTILITY PLANS AND PROFILES FOR ADDITIONAL INFORMATION.

*SKYLINE DRIVE
- 20' - STA 0+00 TO -8+00 (CONNECTION TO EXISTING SKYLINE DRIVE)
- 24' - STA 0+00 TO 7+19
- 20' - STA 7+44 TO INTERSECTION WITH PARKLAND LANE (STA 14+50)
- 24' - STA 14+50 TO 33+100

*PARKLAND LANE
- 24' WIDE - ENTIRE LENGTH

*QUAIL RIDGE DRIVE
- 24' - STA 18+25 TO 21+19

*RYDER PATH
- 24' = STA 0+00 TO END

*GREENSIDE LANE
- 24' - STA 4+48 TO 4+75
- 20' - STA 4+75 TO END

TYPICAL ROAD CROSS-SECTION

NOT TO SCALE

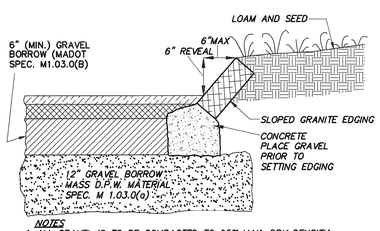

NOTES
1. ALL GRAVEL IS TO BE COMPACTED TO 95% MAX. DRY DENSITY.
2. AREA UNDER GRAVEL BASE COURSE TO BE FREE OF ORGANIC MATERIAL, TRASH, ECT. FILL WHERE REQUIRED SHALL CONFORM TO MASS. D.P.W. 1.03.c. 6" MAX. STONE.
3. SLOPED GRANITE CURBING TO BE USED AT ROUNDING OF INTERSECTIONS.

SLOPED GRANITE CURB DETAIL

NOT TO SCALE

FILE: SLOPE GRANITE CURB.DWG

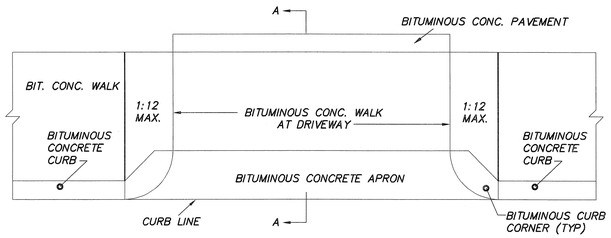

CURB CUT DETAIL

NOT TO SCALE

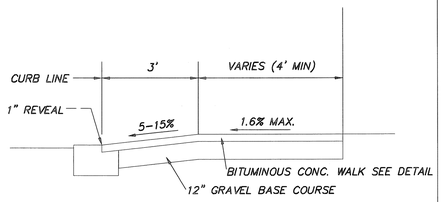

BOHLER ENGINEERING

CORPORATE OFFICE:
WARREN, NJ

SOUTHBOROUGH, MA
BOWIE, MD
CHESTERFIELD, MO
ALBANY, NY
MT. ARLINGTON, NJ
CENTER VALLEY, PA

CHALFONT, PA
PHILADELPHIA, PA
EXTON, PA
WARRENTON, VA
WILLIAMSBURG, VA
TAMPA, FL

CIVIL & CONSULTING ENGINEERS
SURVEYORS
PROJECT MANAGERS
ENVIRONMENTAL CONSULTANTS
LANDSCAPE ARCHITECTS

THE INFORMATION, DESIGN AND CONTENT OF THIS PLAN ARE PROPRIETARY AND SHALL NOT BE COPIED OR USED FOR ANY PURPOSE EXCEPT PRIOR WRITTEN AUTHORIZATION FROM BOHLER ENGINEERING. THIS PLAN IS LIMITED TO THE EXTENT OF WORK AS DESCRIBED IN A WRITTEN CONTRACT BETWEEN BOHLER ENGINEERING AND ITS CLIENT. ANY USE OR REVISION TO THIS PLAN OUTSIDE OF THE SPECIFIED CONTRACT IS PROHIBITED WITHOUT WRITTEN AUTHORIZATION FROM BOHLER ENGINEERING. THIS PLAN IS INTENDED TO BE VIEWED AND REPRODUCED IN COLOR AND IN THE SIZE OF ORIGINAL 24" X 36" SHEETS.

REVISIONS

REV	DATE	COMMENT	BY
1	07-01-2011	CON. COMM. SUBMISSION	JAC/ CFD
2	08-21-2011	FOR ENGINEERING REVIEW	NRK
3	10-06-2011	REVISED SKYLINE DRIVE AND ROAD NAME	CFD
4	11-01-2011	BID SET	CFD
5	01-19-2012	DEP SUBMISSION	CFD
6	02-07-2012	UPDATE CONSTRUCTION SET	MAL
7	02-15-2012	UPDATED DETAIL SHEET	MAL
8	03-09-2012	MISC. REVISIONS	CFD
9			

THE FOLLOWING STATES REQUIRE NOTIFICATION BY EXCAVATORS, DESIGNERS, OR ANY PERSON PREPARING TO DISTURB THE EARTH'S SURFACE ANYWHERE IN THE STATE.
(MA, ME, NH, RI, VT 1-888-344-7233)
(CT 1-800-922-4455)
(NY 1-800-962-7962)

ISSUED FOR CONSTRUCTION

PROJECT No.:	W111022
DRAWN BY:	CFD
CHECKED BY:	JAB/SPD
DATE:	05/23/2011
SCALE:	AS NOTED
CAD I.D.:	w111022ss8_details

PROJECT:

SITE PLAN

FOR

Pulte Homes

THE RESIDENCES AT QUAIL RIDGE

LOCATION OF SITE
354 B GREAT ROAD & SKYLINE DR.
TOWN OF ACTON
MIDDLESEX COUNTY, MA

BOHLER ENGINEERING
352 TURNPIKE ROAD
SOUTHBOROUGH, MA 01772
Phone: (508) 480-9900
Fax: (508) 480-9080
www.BohlerEngineering.com

S.P. DECOURSEY
COMMONWEALTH OF MASSACHUSETTS
STEPHEN P. DeCOURSEY
No. 39338
PROFESSIONAL ENGINEER
MASSACHUSETTS LICENSE No. 39338
CONNECTICUT LICENSE No. 23862
RHODE ISLAND LICENSE No. 7990

SHEET TITLE:

CONSTRUCTION DETAILS SHEET

SHEET NUMBER:

31 OF 36

REV 8 - 03/09/2012

P:\111\W111022\DWG\w111022ss8_details.dwg, 31-Details, 4/23/2010, 10:17:14 AM, cdesrosiers, Xerox3010-1-pc3, User:34, 1:1

DRAINAGE SYSTEM OPERATION AND MAINTENANCE PLAN

THE IMPLEMENTATION, INSPECTION, AND REPAIR OF THE EROSION CONTROLS IS THE RESPONSIBILITY OF THE SITE CONTRACTOR DURING CONSTRUCTION.

THE INSPECTION AND OPERATION OF THE STORM WATER MANAGEMENT SYSTEM UPON COMPLETION OF CONSTRUCTION IS THE RESPONSIBILITY OF THE OWNER.

SITE OWNER:
QUAIL RIDGE PROPERTIES, LLC
354B GREAT ROAD
SKYLINE DRIVE
ACTON, MA 01720
(OR ANY FUTURE OWNER)

PARTIES RESPONSIBLE FOR LONG TERM OPERATION/MAINTENANCE:
THE RESIDENCE AT QUAIL RIDGE, HOME OWNERS ASSOCIATION

SCHEDULE FOR INSPECTION AND MAINTENANCE:
(OR ANY FUTURE OWNER)

DEEP SUMP AND HOODED CATCH BASINS

* THE DEEP SUMP FOR THE CATCH BASINS SHALL BE INSPECTED AND CLEANED ANNUALLY. THE CATCH BASINS HAVE A FOUR FOOT DEEP SUMP AND THE WATER LEVEL IS MAINTAINED BY THE DISCHARGE PIPE AT FOUR FEET. THE DISCHARGE PIPE IS HIDDEN FROM VIEW BY A HOODED OUTLET.
  - THE DEPTH OF THE SEDIMENT IN A BASIN SHALL NOT EXCEED A DEPTH OF 18 INCHES AS DETERMINED BY PROBING WITH A STICK. IF THE STICK HITS THE BOTTOM WITHIN 30 INCHES OF THE WATER LEVEL, MORE THAN 18 INCHES OF SEDIMENT HAS ACCUMULATED AND MUST BE REMOVED. LICENSED PERSONS SHOULD REMOVE AND DISPOSE OF THE CONTENTS OF THE SUMP IN ACCORDANCE WITH APPLICABLE REGULATIONS.

* SEDIMENT SHALL BE REMOVED FROM THE INFILTRATION BASIN ONCE EVERY 10 YEARS TO THE DEPTHS SPECIFIED ON THE PLANS OR IF THERE IS STANDING WATER WITHIN THE BASIN 72 HOURS AFTER A RAINFALL EVENT.

* SEDIMENT SHALL BE REMOVED FROM THE DETENTION BASIN ONCE EVERY 10 YEARS TO THE DEPTHS SPECIFIED ON THE PLANS.

* DURING THE FIRST THREE YEARS AFTER CONSTRUCTION, THE DETENTION BASIN SHALL BE INSPECTED DURING THE GROWING AND NON-GROWING SEASON TWICE PER YEAR. DATA GATHERED DURING THESE INSPECTIONS SHOULD BE RECORDED, MAPPED AND ASSESSED.

GRASSES SHALL BE INSPECTED FOR SURVIVAL RATE. ANY BARE AREAS SHALL BE RESEEDED PRIOR TO THE END OF THE GROWING SEASON.

THE DETENTION BASINS SHALL BE INSPECTED FOR AREAS OF CONCENTRATED SEDIMENT DEPOSITS. CONCENTRATED SEDIMENT DEPOSITS SHALL BE REMOVED BY HAND.

SIDESLOPES OF THE DETENTION BASINS SHALL BE INSPECTED FOR EROSION. ALL ERODED AREAS SHALL RECEIVE 6" OF LOAM AND SEED ACCORDING TO THE PLANS.

THE DETENTION BASINS OUTLET STRUCTURE SHALL BE INSPECTED FOR OBSTRUCTIONS. ALL OBSTRUCTIONS SHALL BE REMOVED UPON INSPECTION. ALL SEDIMENT THAT HAS ACCUMULATED IN THE STRUCTURE SHALL BE REMOVED BY HAND.

STORMCEPTOR:
INSPECTION AND MAINTENANCE OF THE IN-LINE STORMCEPTOR CAN BE PERFORMED FROM THE SURFACE, WITHOUT ENTRY INTO THE UNIT. PERFORM MAINTENANCE ONCE THE STORED VOLUME REACHES 15% OF THE STORMCEPTOR CAPACITY, OR IMMEDIATELY IN THE EVENT OF A SPILL.

PERFORM QUARTERLY INSPECTIONS DURING THE FIRST YEAR OF INSTALLATION TO ACCURATELY ESTABLISH THE MAINTENANCE SCHEDULE.

REMOVE OIL AND SEDIMENT THROUGH THE 24-INCH DIAMETER OUTLET RISER PIPE. ALTERNATIVELY, FLOATABLES AND HYDROCARBONS MAY BE REMOVED THROUGH THE 6-INCH OIL INSPECTION PORT.

DISPOSAL FROM STORMCEPTOR ARE SIMILAR TO THAT OF ANY OTHER BEST MANAGEMENT PRACTICE (BMP). CONSULT LOCAL GUIDELINES OR YOUR STORMCEPTOR AREA MARKETING MANAGER PRIOR TO DISPOSING THE SEPARATOR CONTENTS.

EMERGENCY CONTACTS:
IN THE EVENT OF A HAZARDOUS MATERIALS SPILL ON THE SITE THE FOLLOWING PARTIES SHALL BE-CONTACTED:

FIRE DEPARTMENT: PH: 978-264-9645

PULTE HOMES OF NEW ENGLAND

RECORDS:
THE OWNER SHALL MAINTAIN AN INSPECTION LOG OF ALL ELEMENTS OF THE STORM WATER MANAGEMENT PLAN. THE OWNER SHALL MAINTAIN A MAINTENANCE LOG DOCUMENTING THE INSPECTION AND MAINTENANCE OF THE DRAINAGE STRUCTURES UNDER HIS CONTROL. A COPY OF THE EROSION CONTROL AND STORM WATER MAINTENANCE PLAN AND INSPECTION LOGS SHALL BE KEPT ONSITE AT ALL TIMES.

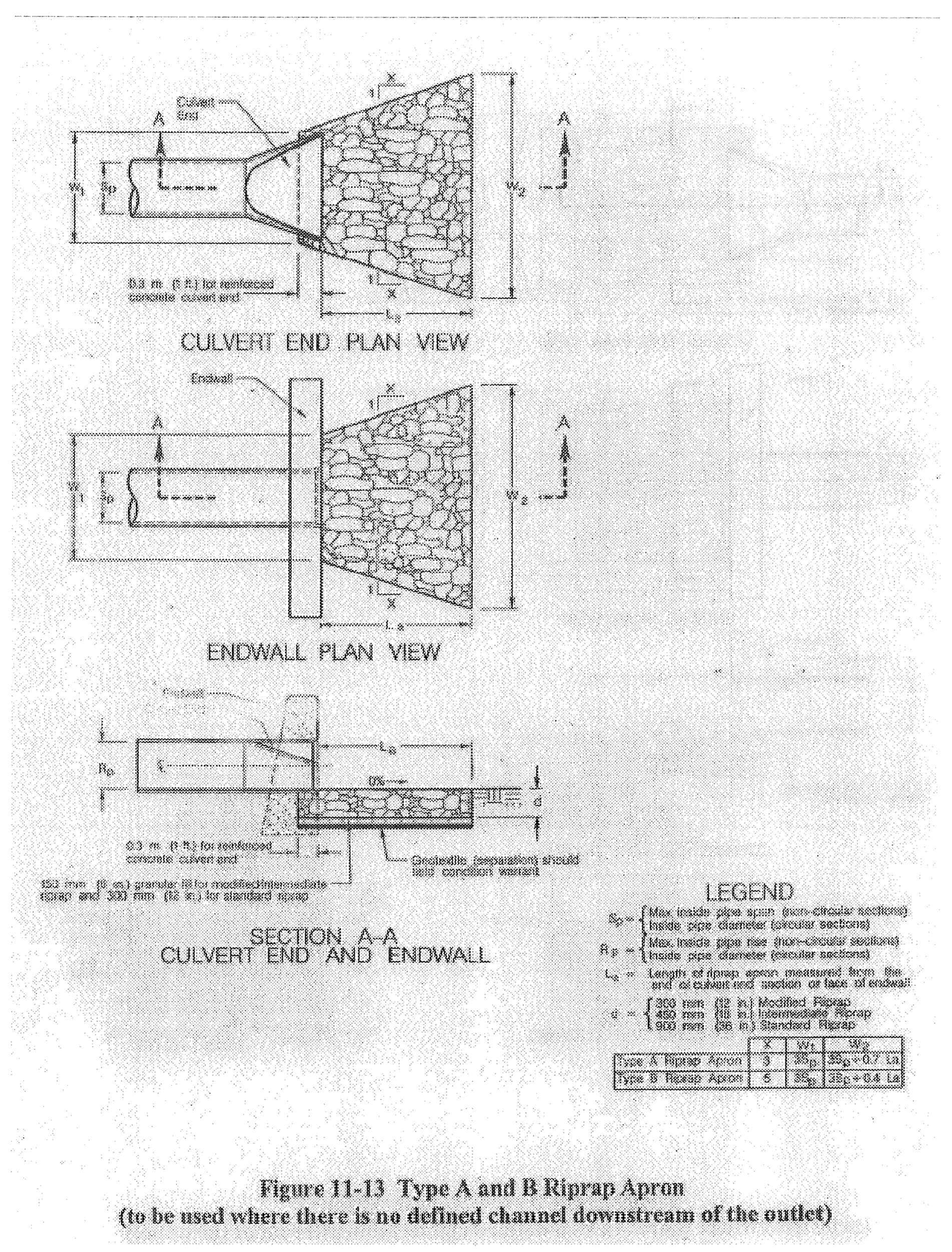

Figure 11-13 Type A and B Riprap Apron
(to be used where there is no defined channel downstream of the outlet)

RIP-RAP APRON

N.T.S.

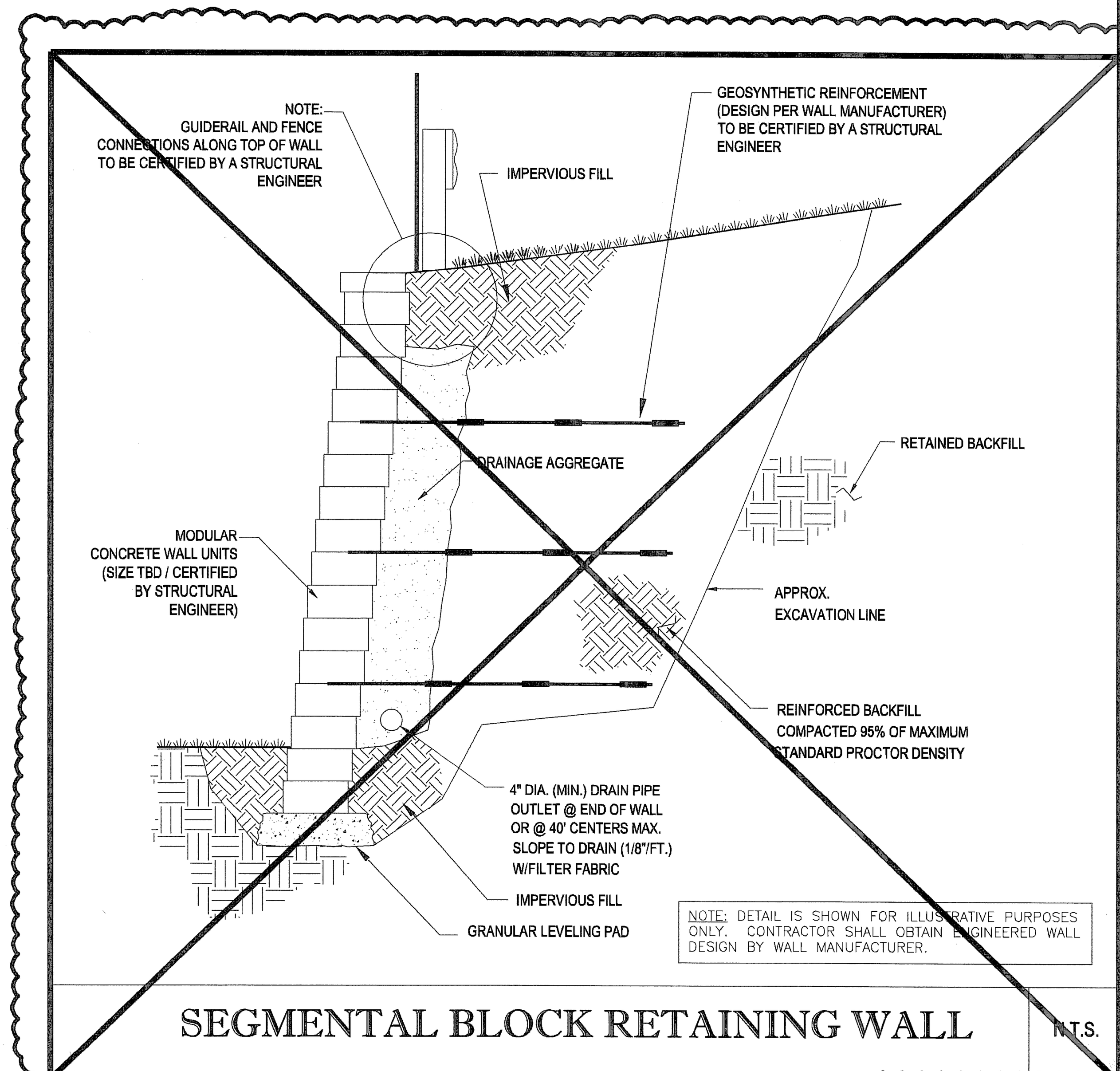

SEGMENTAL BLOCK RETAINING WALL

N.T.S.

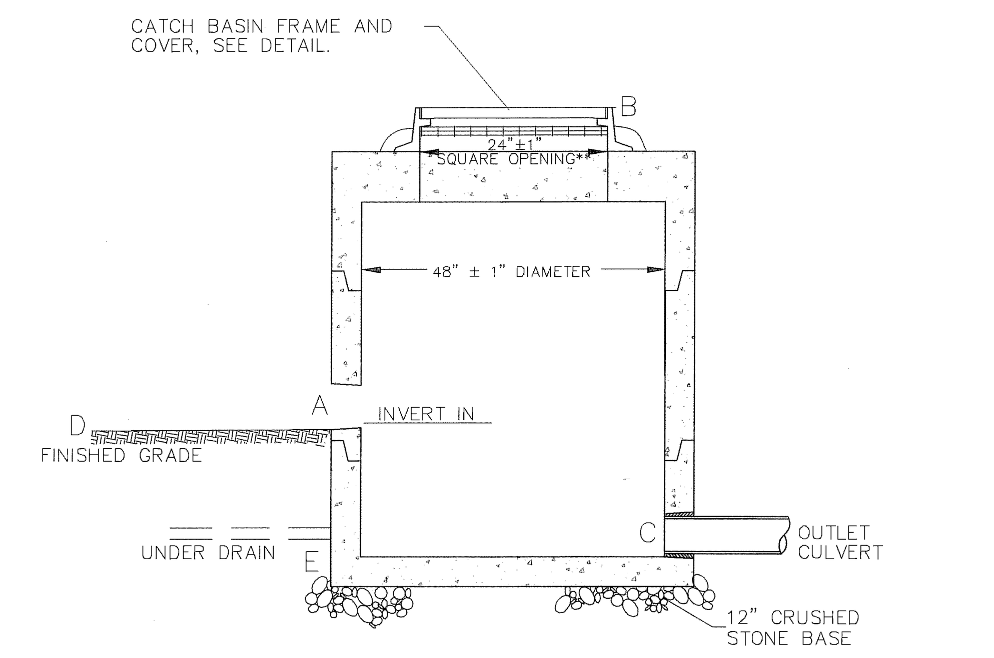

OUTLET STRUCTURE	A	B	C	D	E
#12	18"ORIFICE-224.20	GRATE-225.20	18" HDPE-215.0	BOTTOM BASIN-221.00	N/A
#15	3"ORIFICE-194.00 12"ORIFICE-196.85	GRATE-199.10	12" HDPE-192.0	BOTTOM BASIN-194.00	ELEV. 192.00
#17	3"ORIFICE-224.20 12"ORIFICE-216.50	GRATE-218.25	18" HDPE-212.5	BOTTOM BASIN-214.50	ELEV. 212.50
#22	3"ORIFICE-197.00 12"ORIFICE-198.60	GRATE-202.00	12" HDPE INVERT-197.00	BOTTOM BASIN-197.00	N/A
#28	3"ORIFICE-217.00	OPEN 4' DIAMETER MH NO COVER OR FRAME AND GRATE ELEV. = 219.10	EXISTING 12" RCP-217.0	BOTTOM BASIN-217.00	N/A

OUTLET CONTROL STRUCTURE

NOT TO SCALE

NOTE: SEE PRECAST CONCRETE MANHOLE DETAIL FOR MANHOLE SPECIFICATIONS.

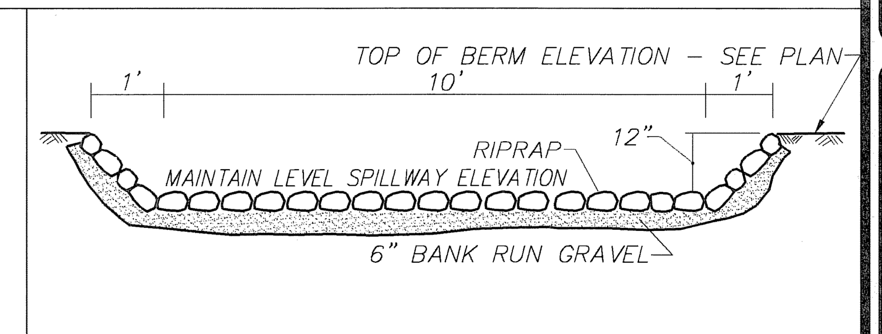

EMERGENCY SPILLWAY DETAIL

NOT TO SCALE

STORMWATER DETENTION BASIN #28

TO BE LINED WITH IMPERVIOUS BARRIER

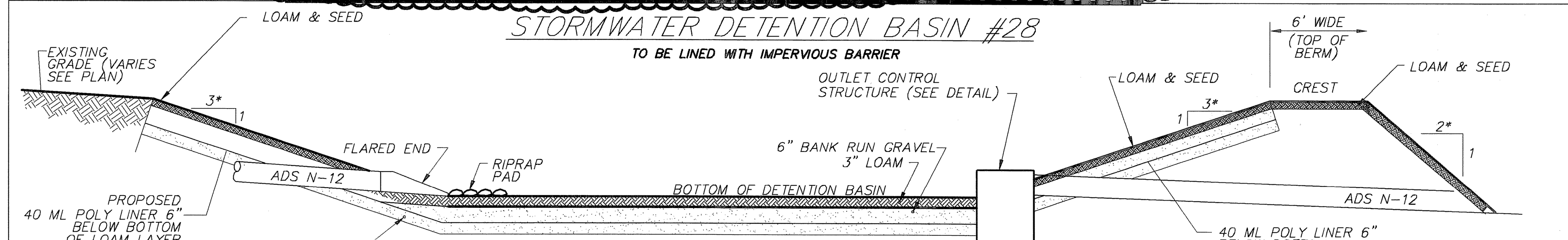

DETENTION BASIN W/ IMPERVIOUS BARRIER DETAIL

NOT TO SCALE

STORMWATER DETENTION BASIN 15* & 17*

(*SEE WATER QUALITY SWALE OUTLET DETAIL)

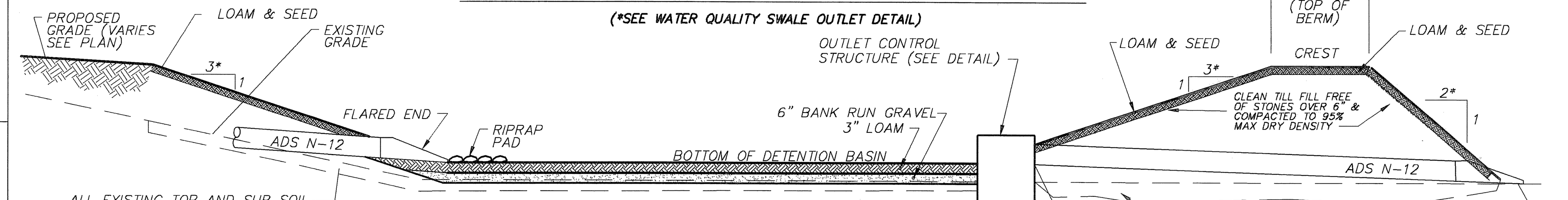

DETENTION BASIN DETAIL

NOT TO SCALE

*NOTE:
INTERIOR SLOPES OF BASIN TO BE 3:1 (H:V) MAX.
EXTERIOR SLOPES OF BASIN TO BE 2:1 (H:V) MAX.

STORMWATER INFILTRATION BASIN 9, 10, 12, 13, 16, & 31

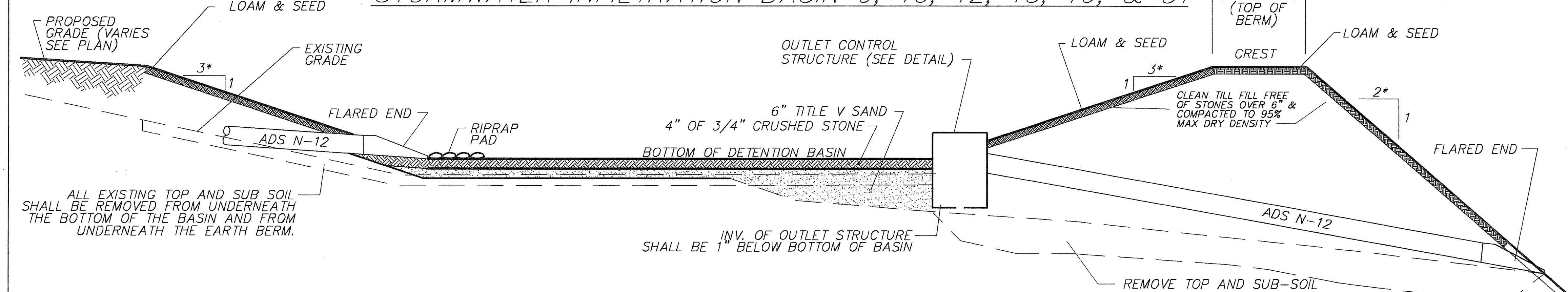

BASIN #	BOTTOM BASIN	E.S.H.W.T.
12	221.00	216.8
16	210.00	207.0
9	231.00	228.5
13	182.00	179.0
10	221.00	219.0
31	216.00	211.0

INFILTRATION BASIN DETAIL

NOT TO SCALE

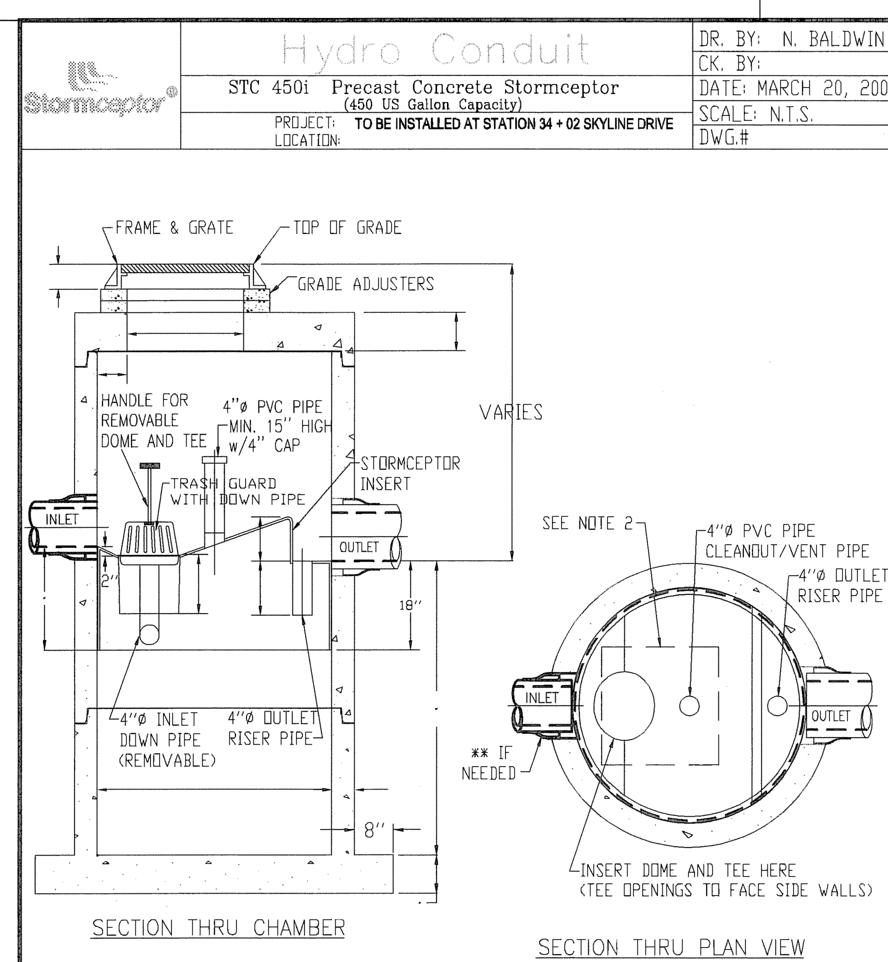

NOTE :
1. THE USE OF FLEXIBLE CONNECTIONS IS RECOMMENDED AT THE OUTLET WHERE APPLICABLE.
2. THE COVER SHOULD BE POSITIONED OVER THE 4"ø CLEANOUT/VENT PIPE AND THE 4"ø INLET DOWN PIPE.
3. THE STORMCEPTOR SYSTEM IS PROTECTED BY ONE OR MORE OFF THE FOLLOWING U.S. PATENTS: #4985148, #5498331, #5725760, #5753115, #5849181, #6068765, AND #6371690.
4. CONTRACTOR TO PROVIDE CRANE TO SET UNIT (HEAVIEST SECTION WEIGHS 5000 LB)

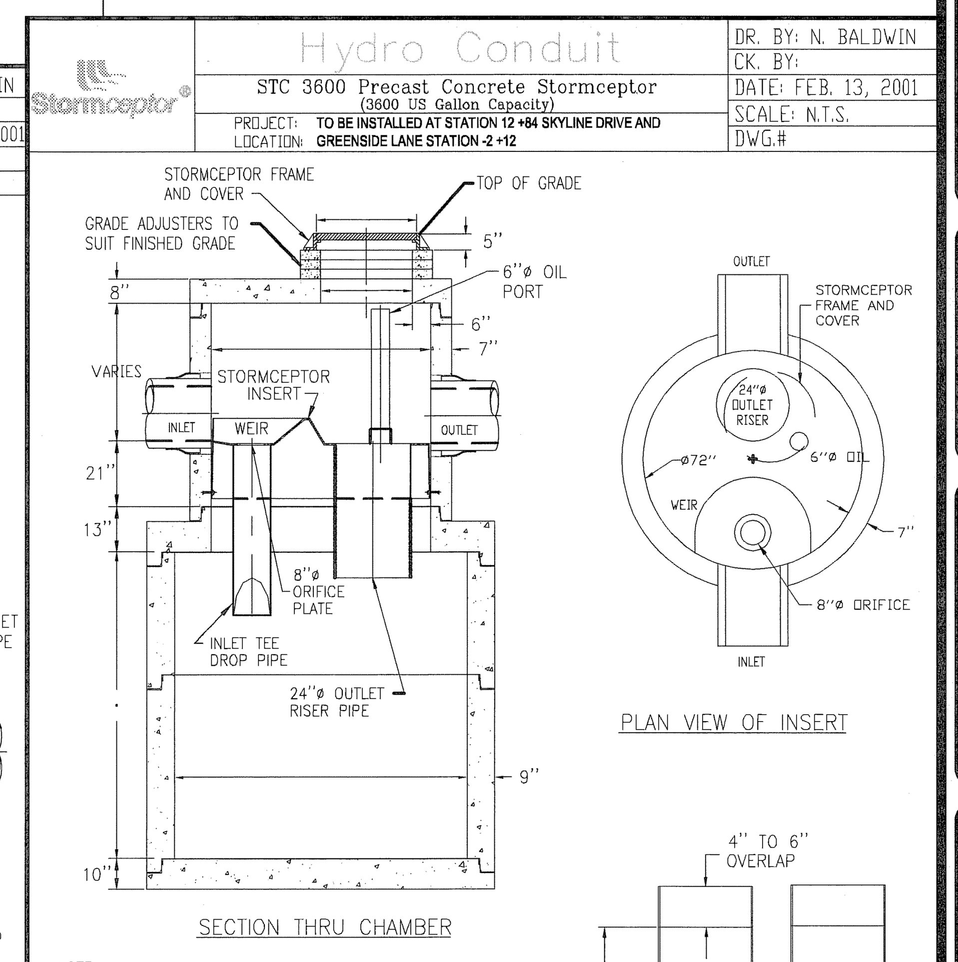

NOTE :
1. THE USE OF FLEXIBLE CONNECTIONS IS RECOMMENDED AT THE INLET AND OUTLET WHERE APPLICABLE.
2. THE COVER SHOULD BE POSITIONED OVER THE 24"ø OUTLET RISER PIPE AND THE 6"ø OIL PORT.
3. THE STORMCEPTOR SYSTEM IS PROTECTED BY ONE OR MORE OF THE FOLLOWING U.S. PATENTS: #4985148, #5498331, #5725760, #5753115, #5849181, #6068765, AND #6371690
4. CONTRACTOR TO PROVIDE CRANE TO SET THE UNIT (HEAVIEST SECTION WEIGHS 7 TONS).

REV.	DESCRIPTION	BY	DATE

BOHLER ENGINEERING
CIVIL & CONSULTING ENGINEERS
SURVEYORS
PROJECT MANAGERS
ENVIRONMENTAL CONSULTANTS
LANDSCAPE ARCHITECTS
CORPORATE OFFICE: WARREN, NJ

REVISIONS

REV	DATE	COMMENT	BY
1	07-01-2011	CON. COMM. SUBMISSION	JAC/CFD
2	08-21-2011	FOR ENGINEERING REVIEW	NRK
3	10-06-2011	REVISED SKYLINE DRIVE AND ROAD NAME	CFD
4	11-01-2011	BID SET	CFD
5	01-19-2012	DEP SUBMISSION	CFD
6	02-07-2012	UPDATE CONSTRUCTION SET	MAL
7	02-15-2012	UPDATED DETAIL SHEET	MAL
8	03-09-2012	MISC. REVISIONS	CFD
9			

STOP - CALL BEFORE YOU DIG!

THE FOLLOWING STATES REQUIRE NOTIFICATION BY EXCAVATORS, DESIGNERS, OR ANY PERSON PREPARING TO DISTURB THE EARTH'S SURFACE ANYWHERE IN THE STATE.
(MA, ME, NH, RI, VT 1-888-344-7233)
(CT 1-800-922-4455)
(NY 1-800-962-7962)

ISSUED FOR CONSTRUCTION

PROJECT No.:	W111022
DRAWN BY:	CFD
CHECKED BY:	JAB/SPD
DATE:	05/23/2011
SCALE:	AS NOTED
CAD I.D.:	w111022ss8_details

PROJECT:

SITE PLAN
FOR
Pulte Homes
THE RESIDENCES AT QUAIL RIDGE
LOCATION OF SITE
354 B GREAT ROAD & SKYLINE DR.
TOWN OF ACTON
MIDDLESEX COUNTY, MA

BOHLER ENGINEERING
352 TURNPIKE ROAD
SOUTHBOROUGH, MA 01772
Phone: (508) 480-9900
Fax: (508) 480-9080
www.BohlerEngineering.com

S.P. DECOURSEY
PROFESSIONAL ENGINEER
MASSACHUSETTS LICENSE No. 36424
NEW HAMPSHIRE LICENSE No. 9308
MAINE LICENSE No. 8408
VERMONT LICENSE No. 7110
CONNECTICUT LICENSE No. 23862
RHODE ISLAND LICENSE No. 7990

SHEET TITLE:
CONSTRUCTION DETAILS SHEET

SHEET NUMBER:
32
OF 36

REV 8 - 03/09/2012

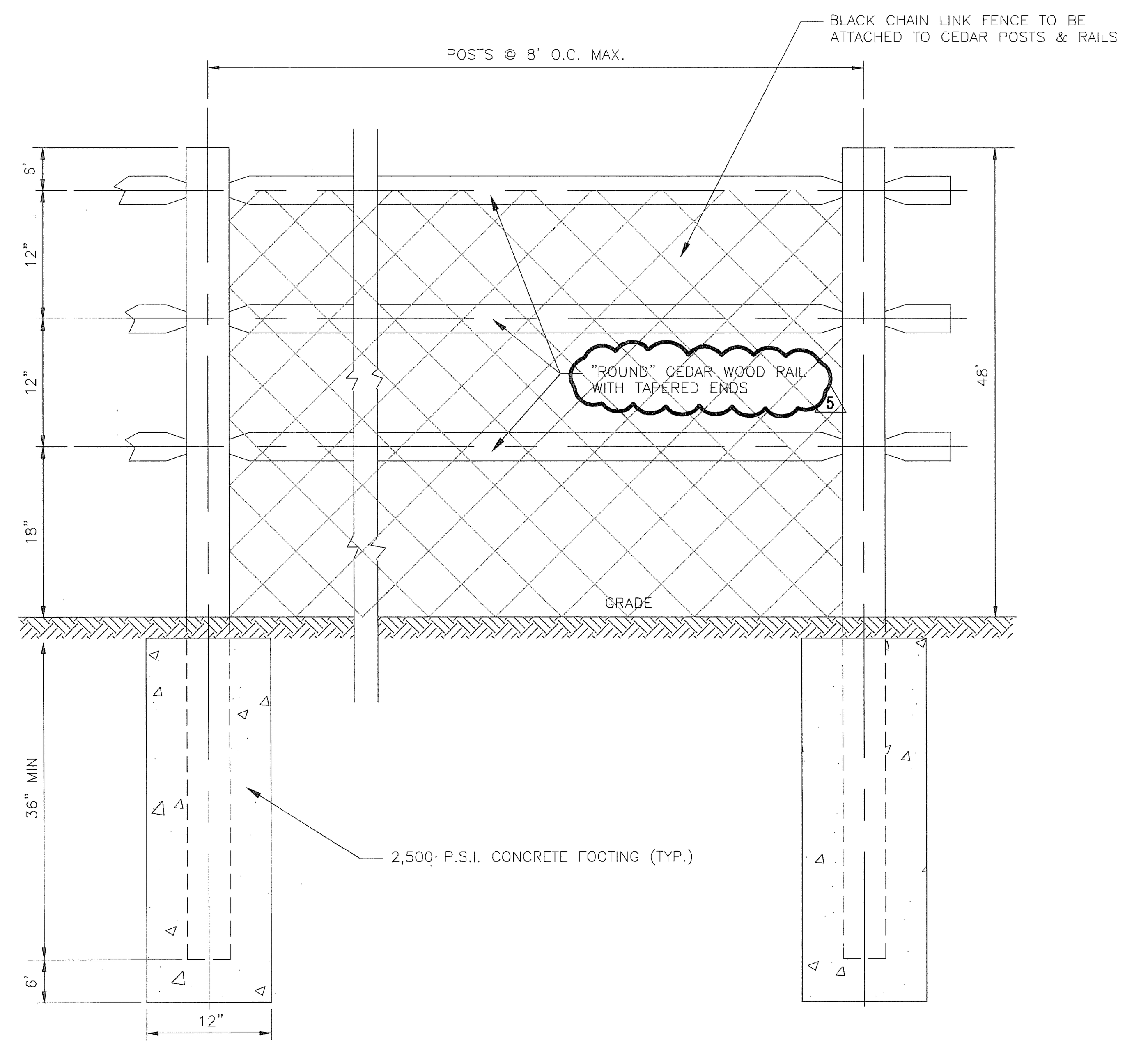

CEDAR FENCE DETAIL

NOT TO SCALE

NOTES:
1) RAILS TO BE UNTREATED CEDAR.
2) POSTS TO BE TREATED CEDAR.
3) BACK FILL TO BE PLACED IN MAXIMUM 8" LIFTS AND COMPACTED TO 95 % OPTIMUM DENSITY.
4) SAFETY FENCING ALONG TOP OF ROCK CUT, WALL AND AROUND DETENTION BASINS SHALL BE 4' TALL, THREE-RAIL ROUND CEDAR POST AND RAIL FENCE WITH 4' VINYL COATED CHAIN LINK FENCING (BLACK) SECURED TO THE ROCK FACE, WALL SIDE OR DETENTION BASIN SIDE OF THE FENCE. FINAL FENCE SELECTION TO BE APPROVED BY OWNER. FENCE SHALL BE SET BACK FROM THE ROCK FACE OR WALL ONLY TO THE EXTENT NECESSARY TO ACHIEVE PROPER EMBEDDING OF FENCE POSTS.
5) SEE RETAINING WALL PLANS BY OTHERS FOR INSTALLATION REQUIREMENTS ADJACENT TO RETAINING WALLS. (5)

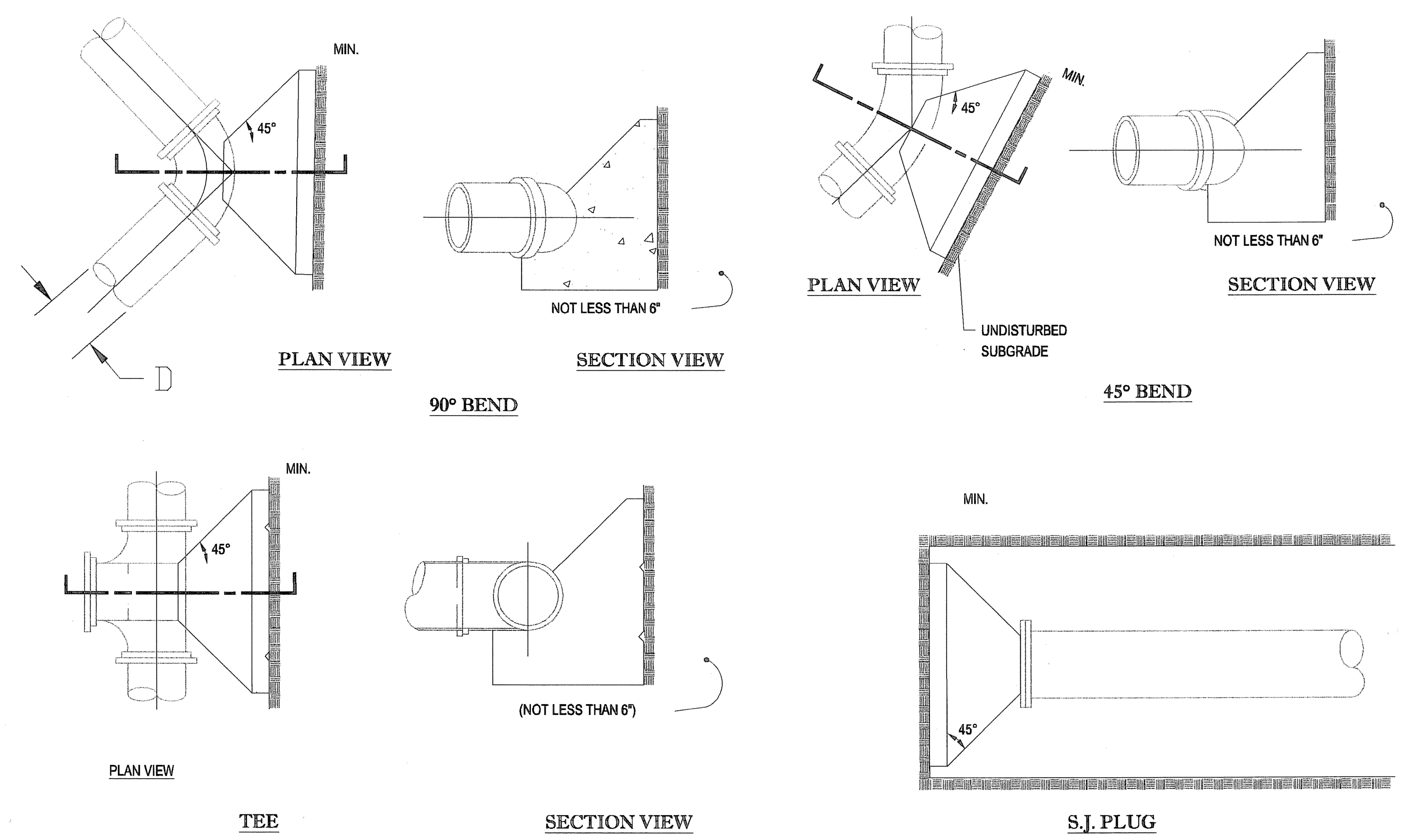

(TO BE USED AT ALL WATER MAIN BENDS)

THRUST BLOCK DETAIL

THRUST BLOCK DETAIL — N.T.S.

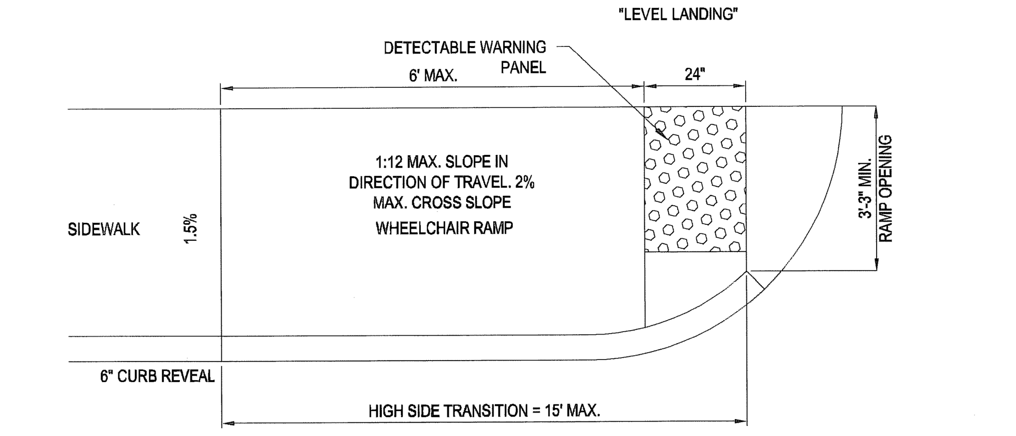

TYPICAL WHEELCHAIR RAMP

N.T.S.

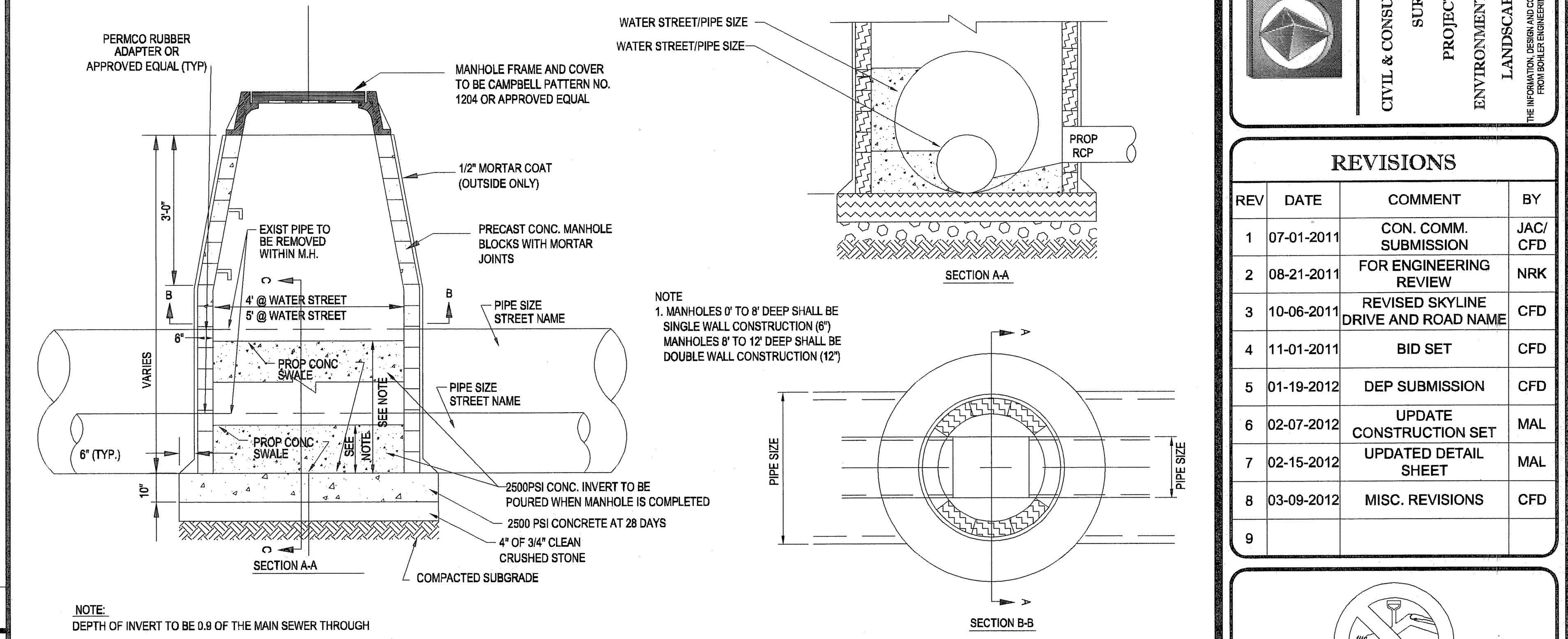

NOTE:
DEPTH OF INVERT TO BE 0.9 OF THE MAIN SEWER THROUGH

DOG HOUSE DETAIL

N.T.S.

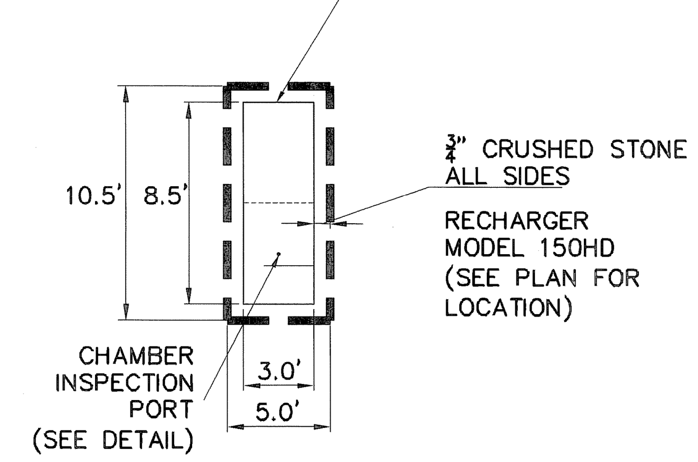

ROOFDRAIN DRYWELL DETAIL

NOT TO SCALE

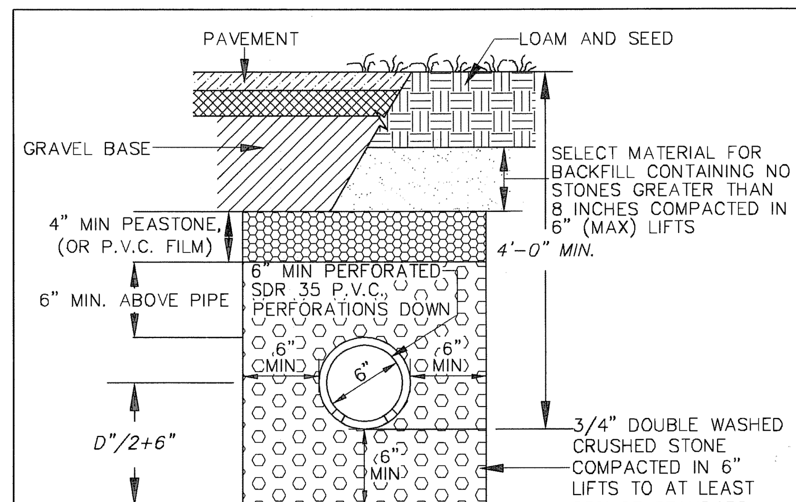

NOTES
1. PROVIDE CLEANOUTS TO FINISHED GRADE AT ALL UPGRADIENT ENDS AND AT INTERVALS OF NO MORE THAN 200 FEET
2. MINIMUM SLOPE SHALL BE 0.003, TO DRAIN TO DAYLIGHT.
3. SUBDRAIN TO BE INSTALLED IN ALL LOCATIONS WHERE THE PROPOSED ROADWAY BASE IS WITHIN A MINIMUM OF 2 FEET OF CUT. THE SUBDRAIN SHALL FOLLOW THE CONTOUR OF THE ROADWAY AND CONNECT TO THE NEAREST DOWN GRADIENT DRAINAGE STRUCTURE.

TYPICAL SUBDRAIN DETAIL

NOT TO SCALE

FILE: SUBDRAIN.DWG

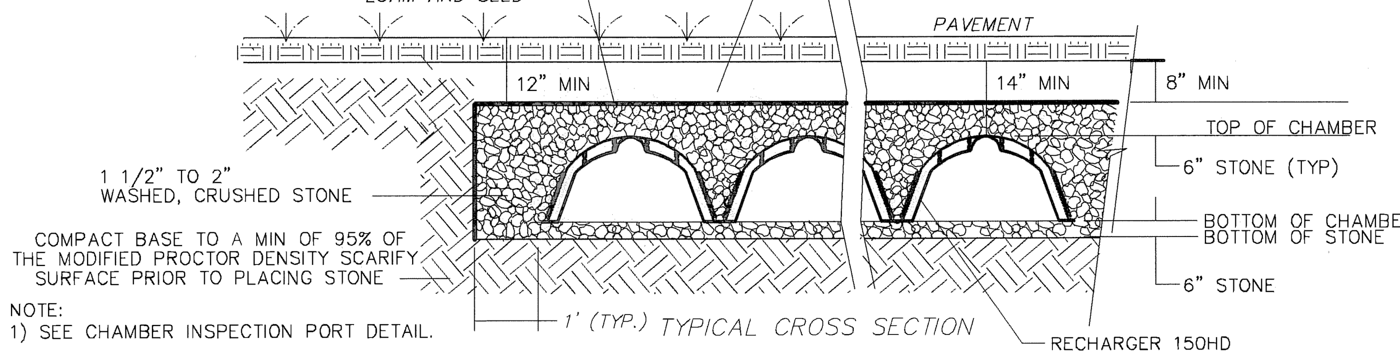

NOTE:
1) SEE CHAMBER INSPECTION PORT DETAIL.

TYPICAL ROOF DRAIN RECHARGE AREA DETAIL

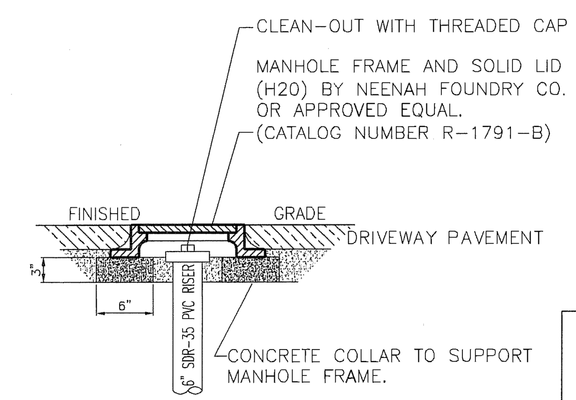

CLEANOUT IN PAVEMENT DETAIL

N.T.S.

FILE: CULTEC CO PAVEMENT.DWG

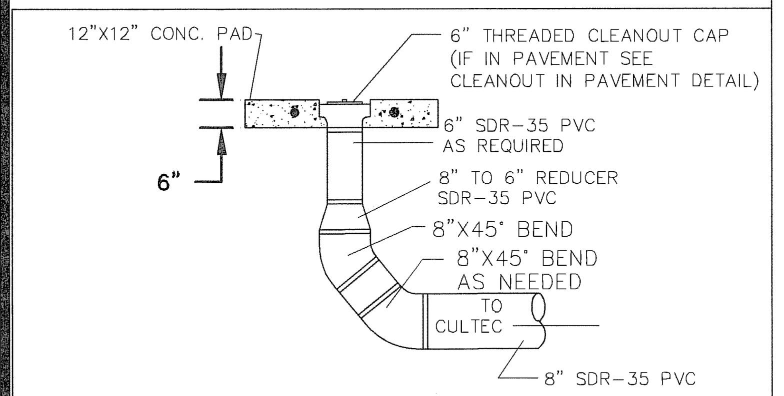

CULTEC CLEANOUT DETAIL

NOT TO SCALE

FILE: CULTEC CLEANOUT.DWG

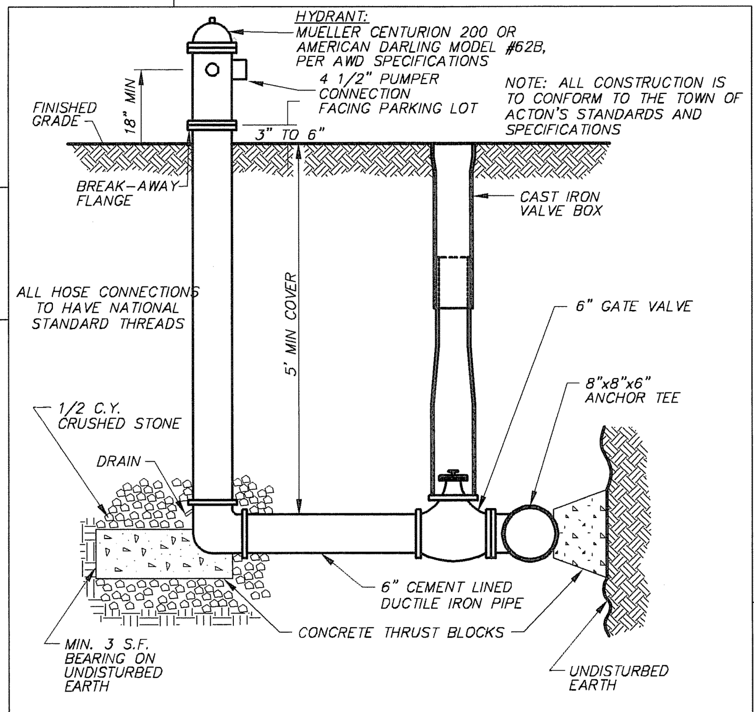

FIRE HYDRANT DETAIL

NOT TO SCALE

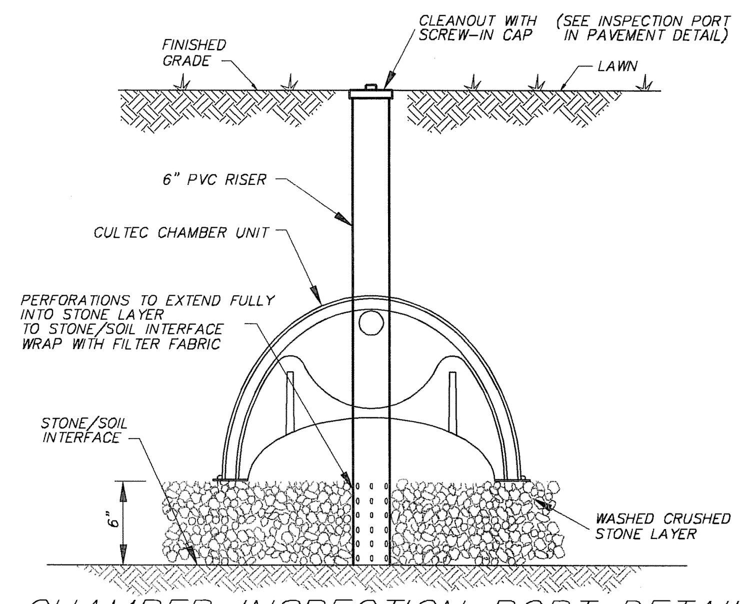

CHAMBER INSPECTION PORT DETAIL

NOT TO SCALE

FILE: CHAMBER INSPECT PORT.DWG

CULTEC RECHARGER 150HD HEAVY DUTY

NOT TO SCALE

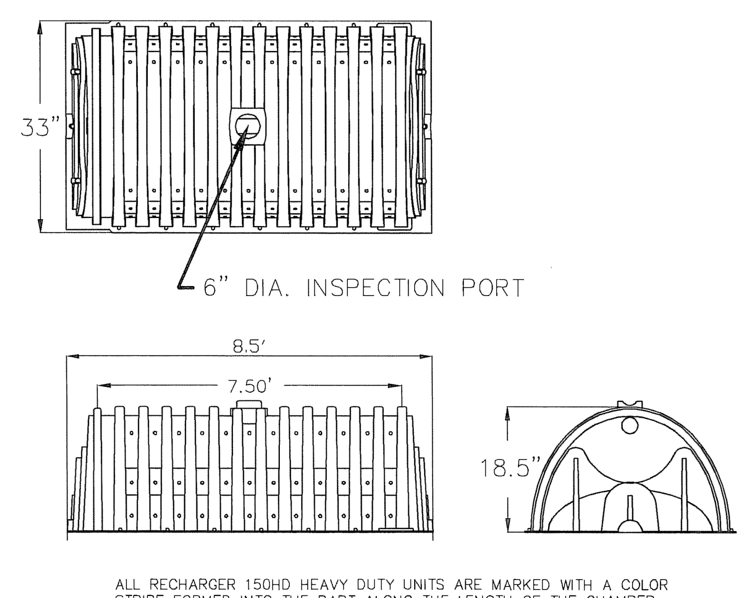

ALL RECHARGER 150HD HEAVY DUTY UNITS ARE MARKED WITH A COLOR STRIPE FORMED INTO THE PART ALONG THE LENGTH OF THE CHAMBER.

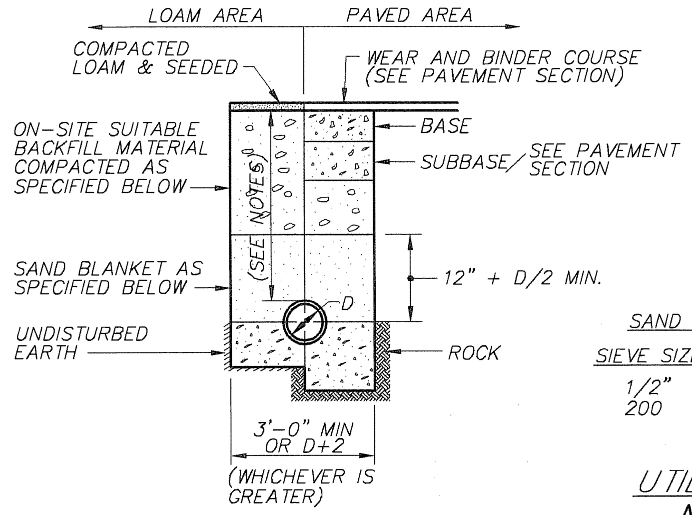

NOTES:
1. CRUSHED STONE BEDDING AS SPECIFIED BELOW FOR FULL WIDTH OF THE TRENCH UP TO SPRINGLINE OF PIPE, 6" BELOW PIPE IN EARTH AND 12" BELOW PIPE IN ROCK
2. BACKFILL MATERIAL BELOW PAVED OR CONCRETE AREAS, BEDDING MATERIAL, AND SAND BLANKET SHALL BE COMPACTED TO NOT LESS THAN 95% OF AASHTO T 99, METHOD C. SUITABLE BACKFILL MATERIAL BELOW LOAM AREAS SHALL BE COMPACTED TO NOT LESS THAN 90%
3. PROVIDE 5' MIN. COVER FOR WATER AND PRESSURE SEWER LINES.

SAND BLANKET & BEDDING

SIEVE SIZE	
1/2"	90 - 100
200	0 - 15

3/4" CRUSHED STONE BEDDING

SIEVE SIZE	% FINER BY WEIGHT
1"	
3/4"	90 - 100
1/2"	20 - 50
3/8"	0 - 20
# 4	0 - 5

UTILITY TRENCH

NOT TO SCALE

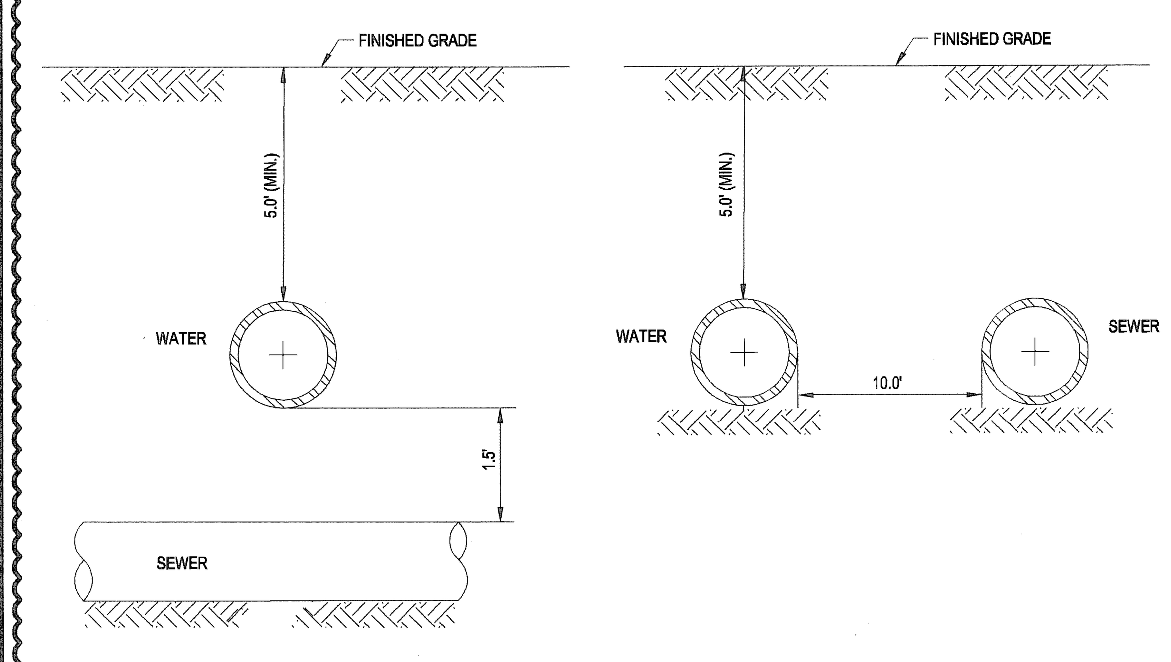

NOTE:
10' HORIZONTAL SEPARATION AND 1.5' VERTICAL SEPARATION SHALL BE PROVIDED BETWEEN WATER AND SEWER AS DEPICTED IN THIS DETAIL OR SEWER SHALL BE ENCASED IN CONCRETE (SEE "CONCRETE ENCASEMENT DETAIL AT UTILITY CROSSING" DETAIL THIS SHEET) IN SECTIONS WHERE SEPARATIONS SHALL NOT BE ACHIEVED.

WATER/SEWER CROSSING DETAIL

N.T.S.

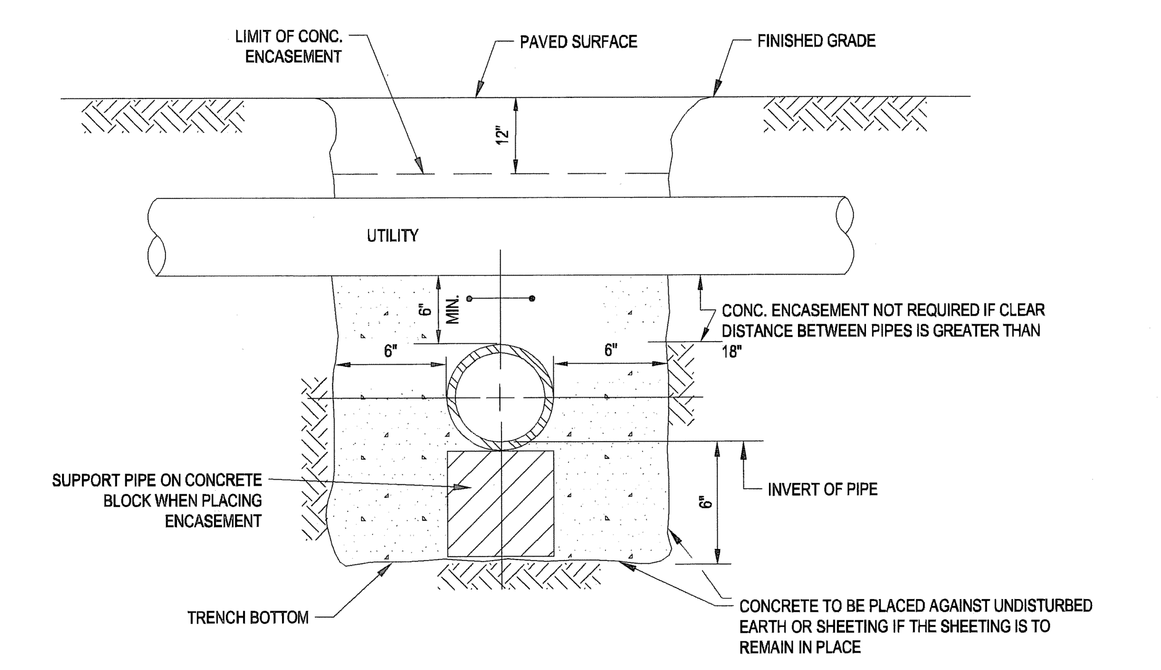

NOTES:
- PIPE MUST BE BRACED VERTICALLY & HORIZONTALLY TO PREVENT FLOATATION DURING PLACEMENT OF CONCRETE
- ALL CONCRETE ENCASEMENT SHALL BE KEPT 12" BELOW THE BOTTOM OF ASPHALT PAVEMENT
- CONCRETE ENCASEMENT SHALL EXTEND 1.5' IN EITHER DIRECTION OF CROSSING EXCEPT FOR WATER/SEWER CROSSINGS, WHICH SHALL EXTEND 10' IN EITHER DIRECTION OF CROSSING.

CONCRETE ENCASEMENT DETAIL AT UTILITY CROSSING

N.T.S.

BOHLER ENGINEERING
CIVIL & CONSULTING ENGINEERS
SURVEYORS
PROJECT MANAGERS
ENVIRONMENTAL CONSULTANTS
LANDSCAPE ARCHITECTS

REVISIONS

REV	DATE	COMMENT	BY
1	07-01-2011	CON. COMM. SUBMISSION	JAC/ CFD
2	08-21-2011	FOR ENGINEERING REVIEW	NRK
3	10-06-2011	REVISED SKYLINE DRIVE AND ROAD NAME	CFD
4	11-01-2011	BID SET	CFD
5	01-19-2012	DEP SUBMISSION	CFD
6	02-07-2012	UPDATE CONSTRUCTION SET	MAL
7	02-15-2012	UPDATED DETAIL SHEET	MAL
8	03-09-2012	MISC. REVISIONS	CFD
9			

STOP - CALL BEFORE YOU DIG!

THE FOLLOWING STATES REQUIRE NOTIFICATION BY EXCAVATORS, DESIGNERS, OR ANY PERSON PREPARING TO DISTURB THE EARTH'S SURFACE ANYWHERE IN THE STATE.
(MA, ME, NH, RI, VT 1-888-344-7233)
(CT 1-800-922-4455)
(NY 1-800-962-7962)

ISSUED FOR CONSTRUCTION

PROJECT No.:	W111022
DRAWN BY:	CFD
CHECKED BY:	JAB/SPD
DATE:	05/23/2011
SCALE:	AS NOTED
CAD I.D.:	w111022ss8_details

PROJECT:

SITE PLAN

FOR

Pulte Homes

THE RESIDENCES AT QUAIL RIDGE

LOCATION OF SITE
354 B GREAT ROAD & SKYLINE DR.
TOWN OF ACTON
MIDDLESEX COUNTY, MA

BOHLER ENGINEERING
352 TURNPIKE ROAD
SOUTHBOROUGH, MA 01772
Phone: (508) 480-9900
Fax: (508) 480-9080
www.BohlerEngineering.com

S.P. DECOURSEY
PROFESSIONAL ENGINEER
MASSACHUSETTS LICENSE No. 46424
NEW HAMPSHIRE LICENSE No. 9308
MAINE LICENSE No. 9408
VERMONT LICENSE No. 7110
CONNECTICUT LICENSE No. 23862
RHODE ISLAND LICENSE No. 7990

SHEET TITLE:

CONSTRUCTION DETAILS SHEET

SHEET NUMBER:

33 OF 36

REV 8 - 03/09/2012

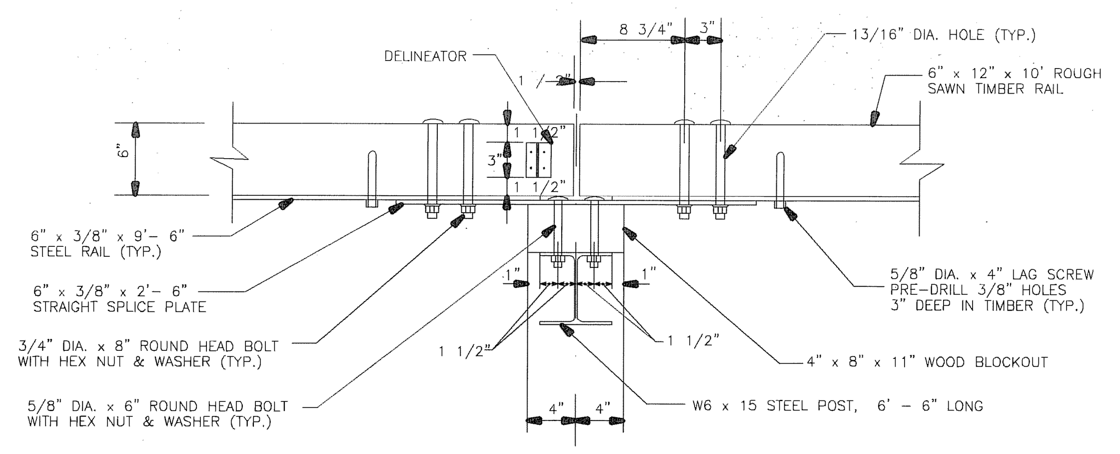

POST CONNECTION FOR STRAIGHT SECTIONS

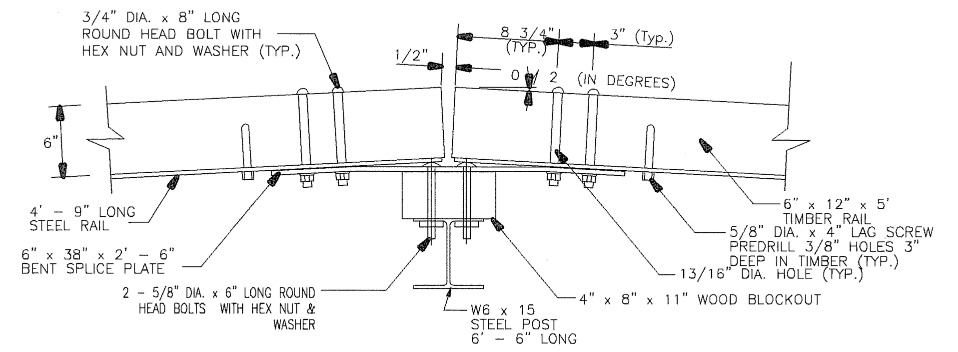

POST CONNECTION FOR CURVES WITH R≤70'

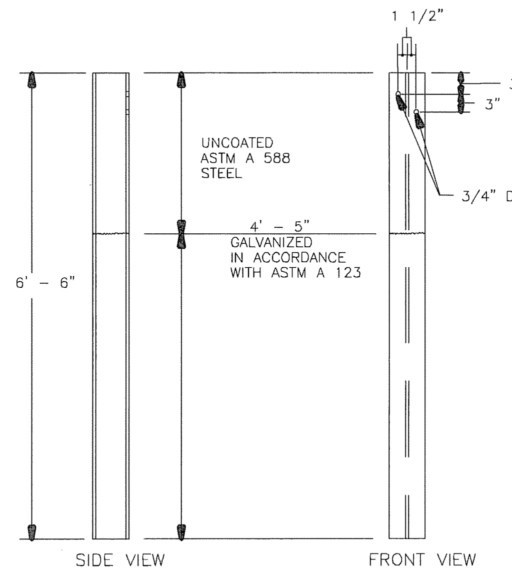

POST DETAIL (W6 X 15)

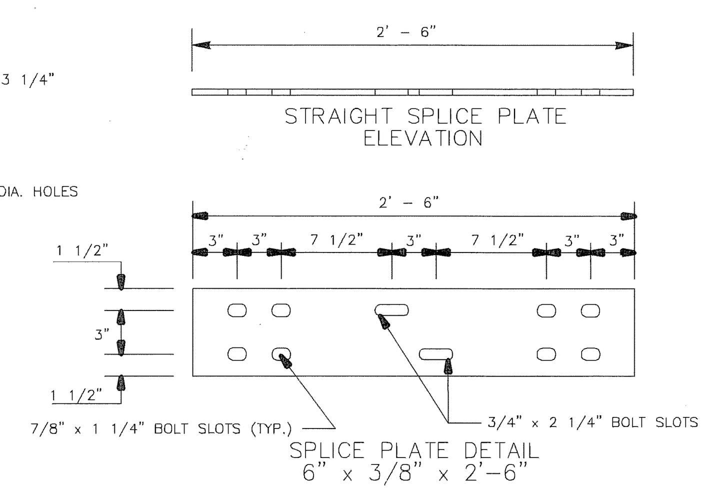

SPLICE PLATE DETAIL 6" x 3/8" x 2'-6"

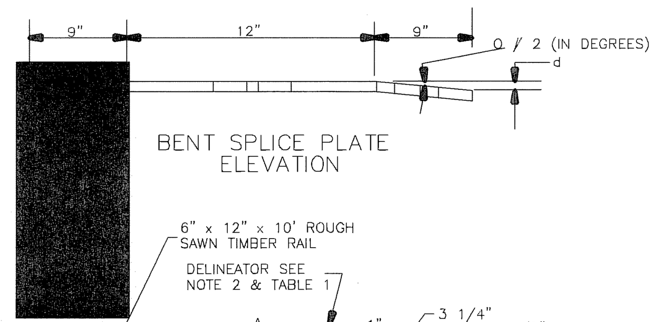

BENT SPLICE PLATE ELEVATION

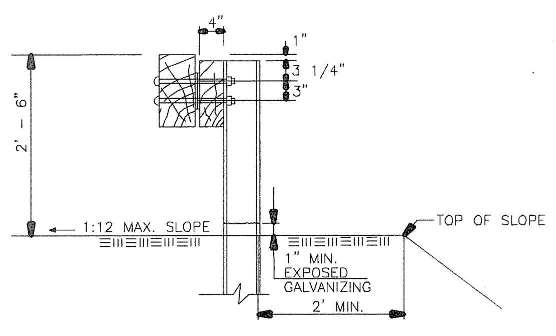

SECTION A-A (NO CURB)

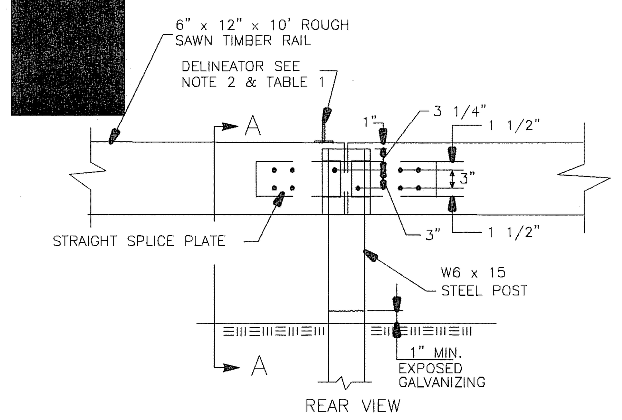

POST CONNECTION ELEVATION

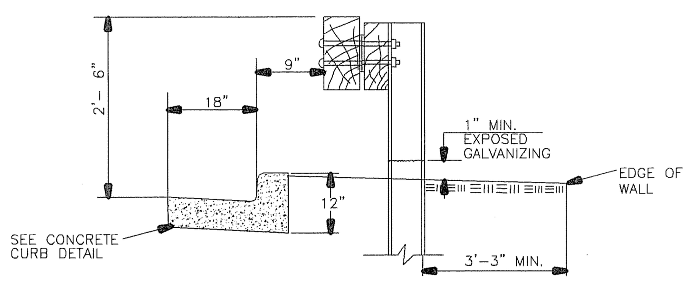

STANDARD SECTION WITH MOUNTABLE CURB

NOTES:

1. WHEN FURNISHING THE SHOP BENT SPLICE PLATES, USE THE MINIMUM BEND ANGLE AS SHOWN IN TABLE 2.

2. FOR RAILING SET ON A CURVE WITH RADII < 70' SPACE POSTS AT 5'.

TABLE 2

Radius R (ft.)	0// 2 (Degrees)	d (in.)
35 Min.	4.10	5/8
40	3.58	9/16
45	3.18	1/2
50	2.86	7/16
55	2.60	7/16
60	2.40	3/8
65	2.20	3/8
70	2.05	5/16
Over 70	Flat	0

TO BE INSTALLED ALONG TOPS OF CONCRETE WALL (SEE STRUCTURAL RETAINING WALL PLANS)

GUIDE RAIL DETAILS

N.T.S.

8

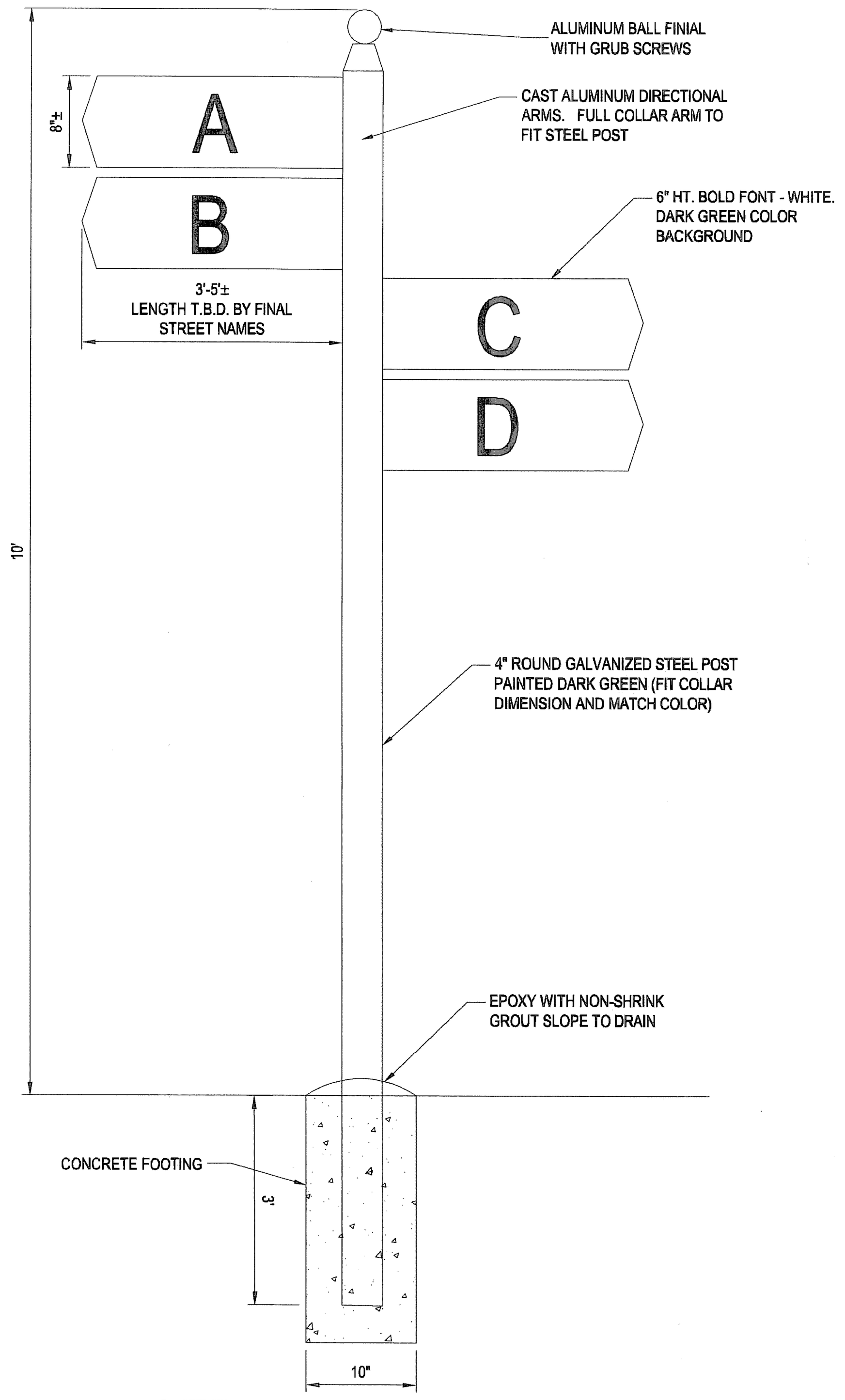

STREET SIGNS, TYP.

NOT TO SCALE

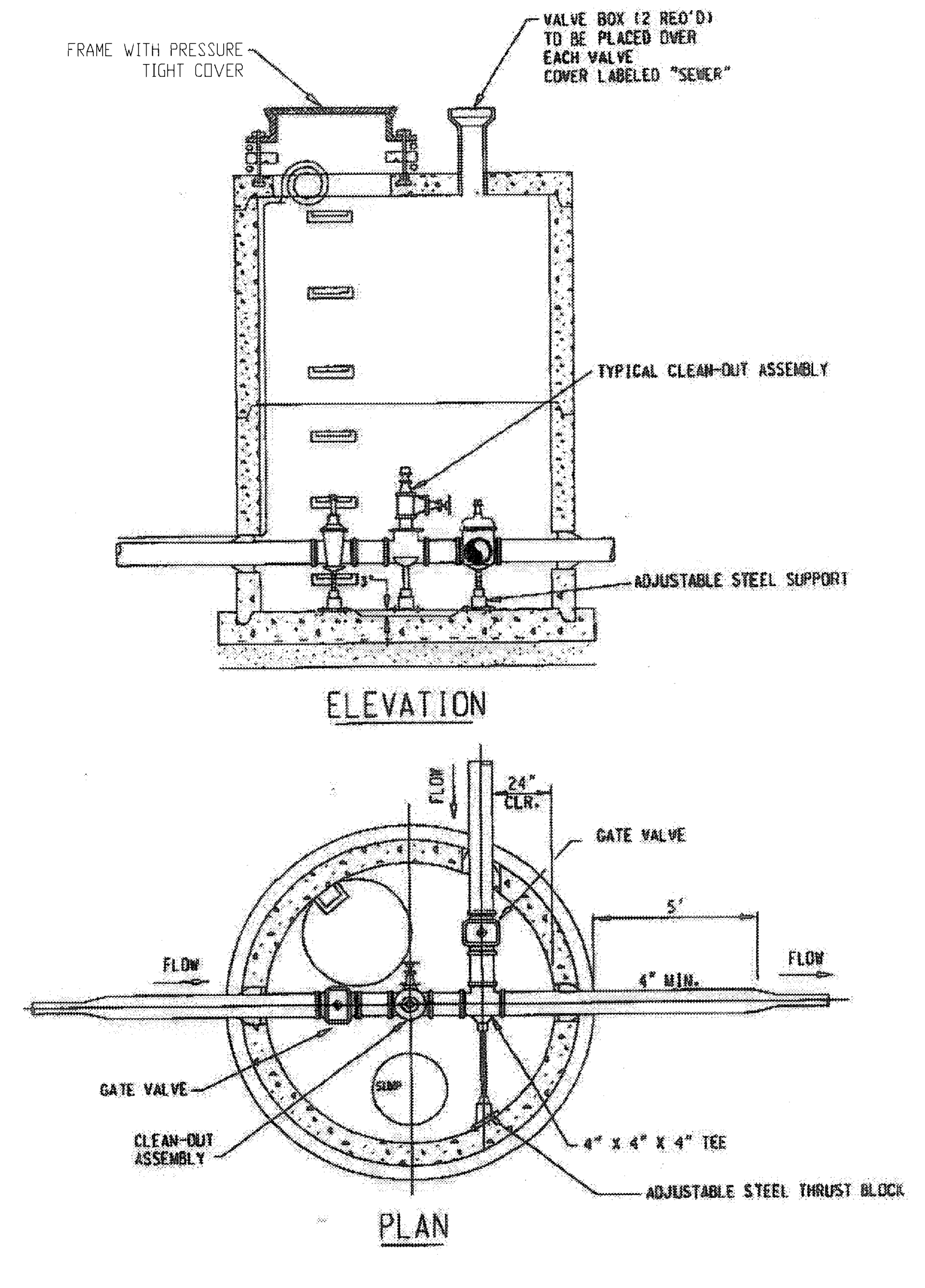

3-WAY BRANCH FLUSHING CONNECTION

NOT TO SCALE

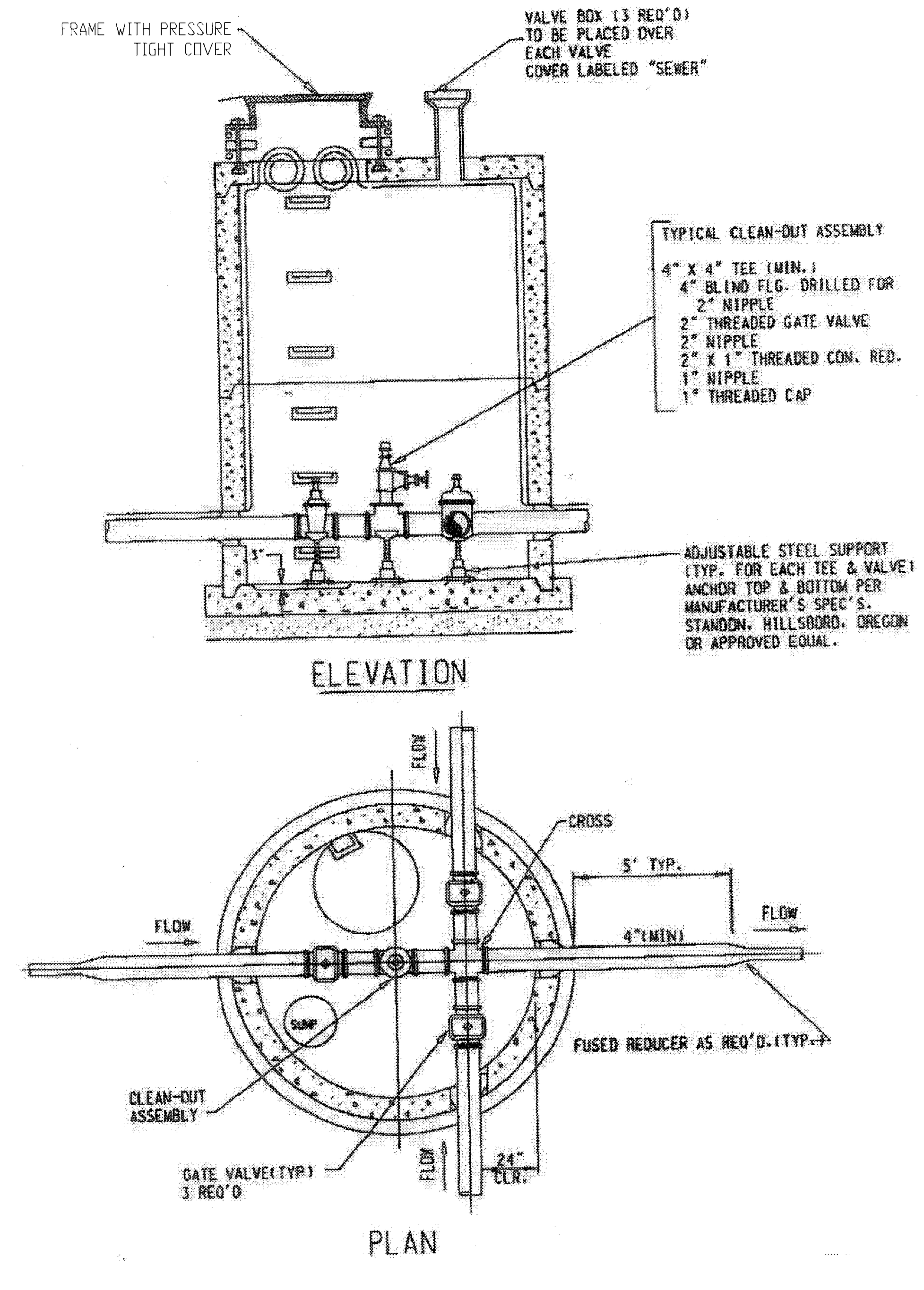

4-WAY BRANCH FLUSHING CONNECTION

NOT TO SCALE

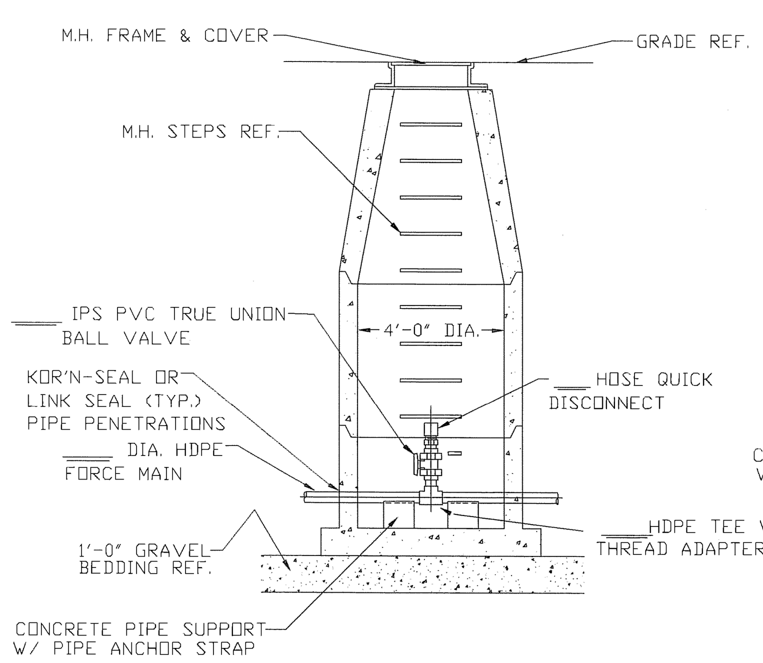

TYPICAL ELEV. VIEW

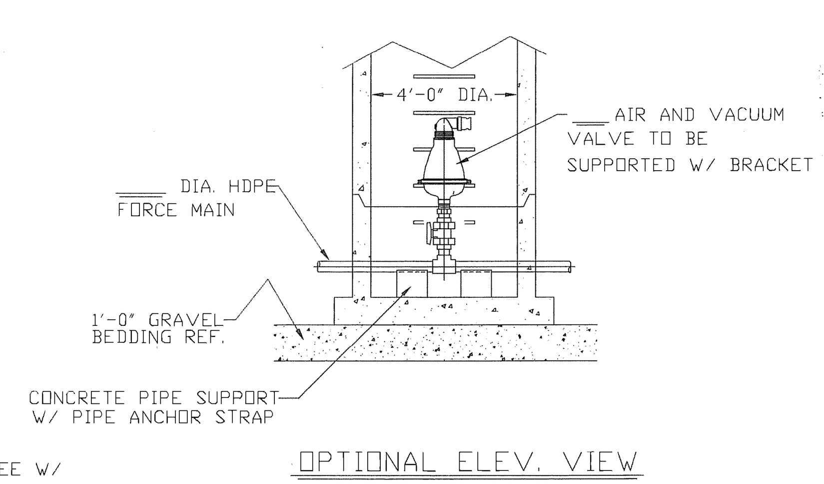

OPTIONAL ELEV. VIEW

AIR & VACUUM VALVE MTG. DETAIL

NOTES: SDR11 HDPE FITTINGS TO BE ELECTRO-FUSED

REV.#	DESCRIPTION	BY:	DATE
1	Modified for ARI Air Relief Valve	grm	02/11/10

THIS DRAWING CONTAINS INFORMATION THAT IS PROPRIETARY TO F. R. MAHONY & ASSOCIATES, INC. AND SHOULD NOT BE USED WITHOUT WRITTEN PERMISSION

F. R. MAHONY & associates, inc. — 273 WEYMOUTH STREET ROCKLAND, MASSACHUSETTS 02370 (781) 982-9300 Fax: (781) 982-1056

CUSTOMER/ENGINEER:

PROJECT NAME: PROJECT NO.:

DESCRIPTION: IN-LINE FLUSHING M.H. DETAIL- HDPE SDR11 PIPING

SCALE: NONE DRAWN BY: DRAWING NO. FRM-3B

DATE: CHK'D BY:

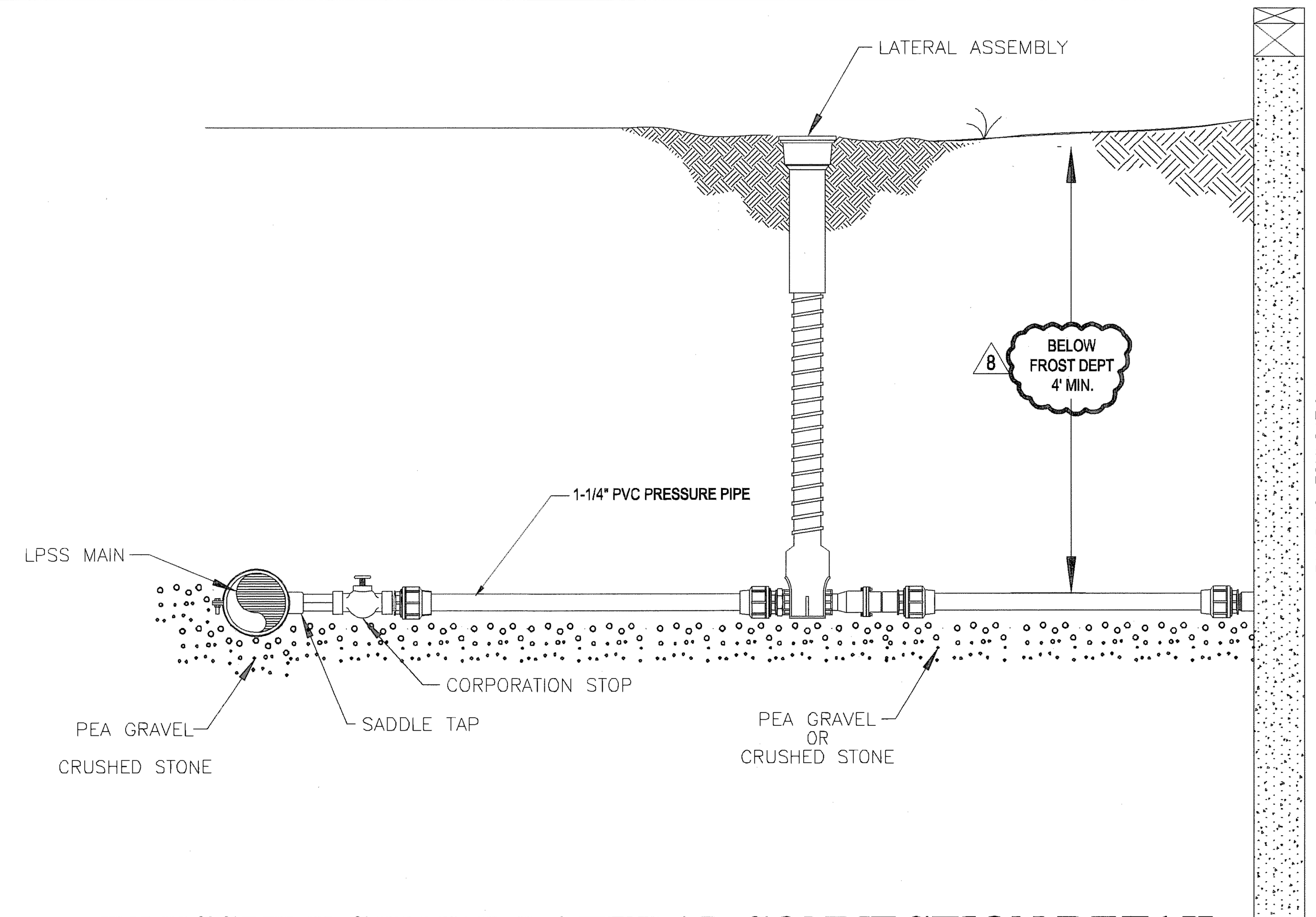

PRESSURE SEWER LATERAL CONNECTION DETAIL

NOT TO SCALE

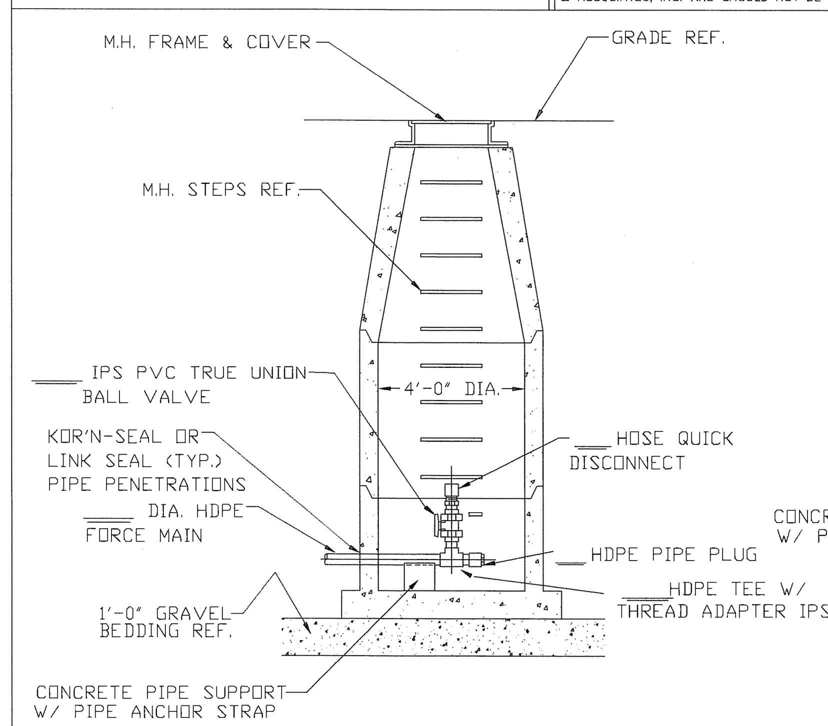

TYPICAL ELEV. VIEW

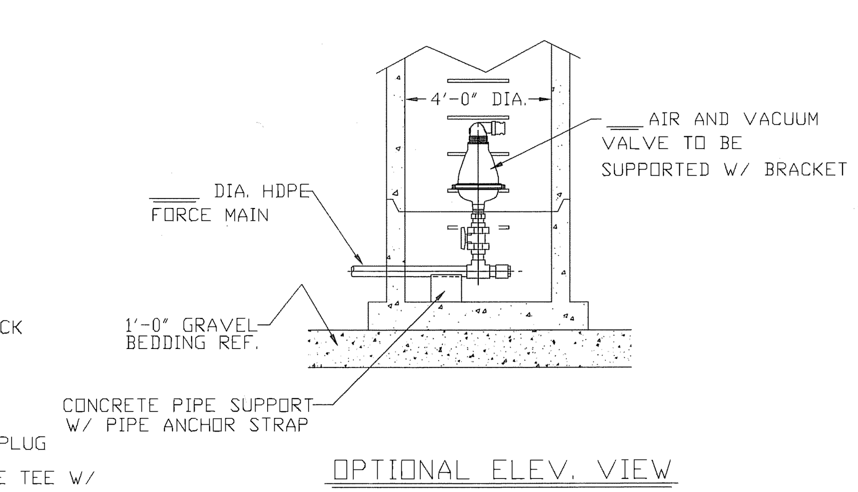

OPTIONAL ELEV. VIEW

AIR & VACUUM VALVE MTG. DETAIL

NOTES: SDR11 HDPE FITTINGS TO BE ELECTRO-FUSED

REV.#	DESCRIPTION	BY:	DATE
1	Modified for ARI Air Relief Valve	grm	02/11/10

THIS DRAWING CONTAINS INFORMATION THAT IS PROPRIETARY TO F. R. MAHONY & ASSOCIATES, INC. AND SHOULD NOT BE USED WITHOUT WRITTEN PERMISSION

F. R. MAHONY & associates, inc. — 273 WEYMOUTH STREET ROCKLAND, MASSACHUSETTS 02370 (781) 982-9300 Fax: (781) 982-1056

CUSTOMER/ENGINEER:

PROJECT NAME: PROJECT NO.:

DESCRIPTION: TERMINAL FLUSHING M.H. DETAIL- HDPE SDR11 PIPING

SCALE: NONE DRAWN BY: DRAWING NO. FRM-3A

DATE: CHK'D BY:

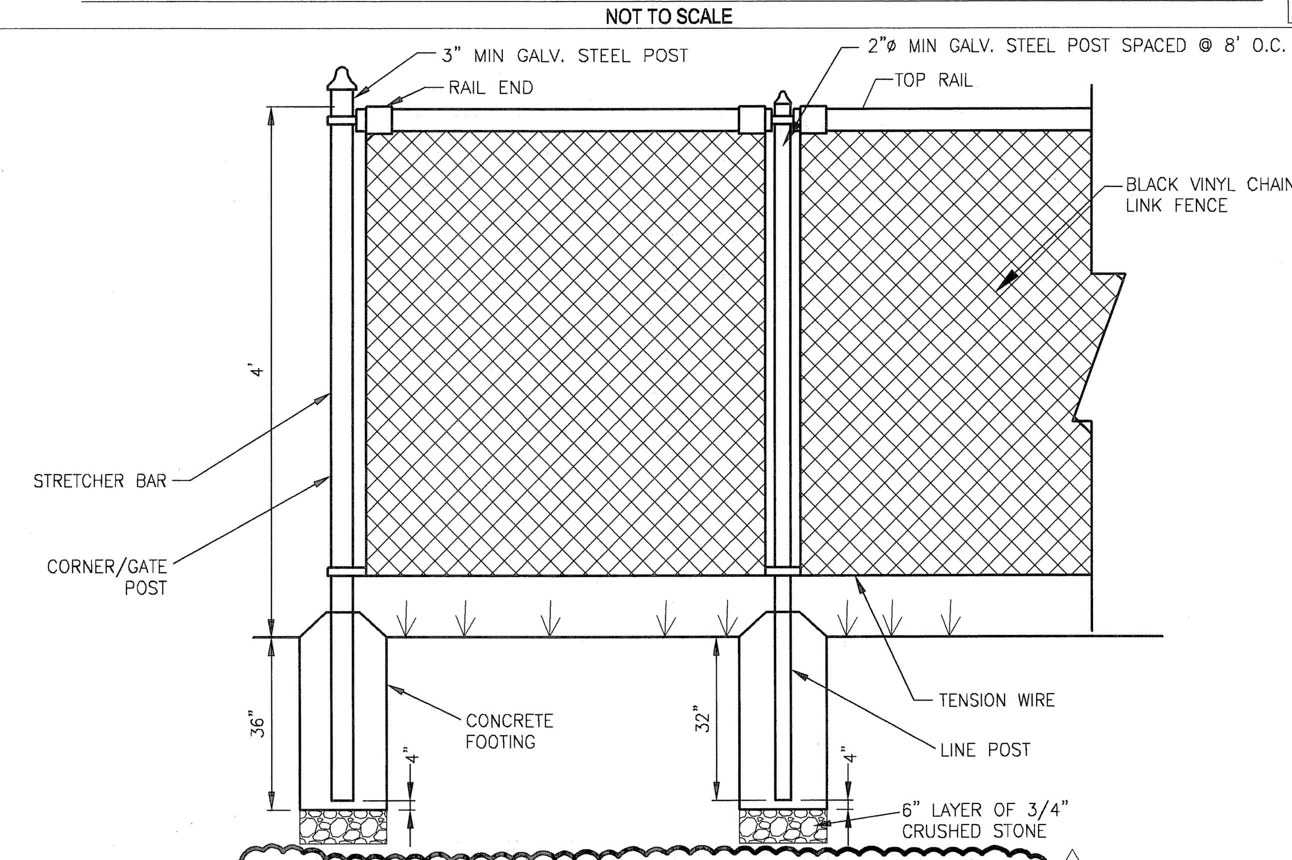

4' HIGH BLACK VINYL CHAIN LINK FENCE

(NOT TO SCALE)

8

BOHLER ENGINEERING

CIVIL & CONSULTING ENGINEERS
SURVEYORS
PROJECT MANAGERS
ENVIRONMENTAL CONSULTANTS
LANDSCAPE ARCHITECTS

CORPORATE OFFICE: WARREN, NJ

OFFICES: SOUTHBOROUGH, MA; BOWIE, MD; TOWSON, MD; ALBANY, NY; RONKONKOMA, NY; CENTER VALLEY, PA; CHALFONT, PA; PHILADELPHIA, PA; STERLING, VA; WARRENTON, VA; FORT LAUDERDALE, FL; TAMPA, FL

THE INFORMATION, DESIGN AND CONTENT OF THIS PLAN ARE PROPRIETARY AND SHALL NOT BE COPIED OR USED FOR ANY PURPOSE WITHOUT PRIOR WRITTEN AUTHORIZATION FROM BOHLER ENGINEERING.

REVISIONS

REV	DATE	COMMENT	BY
1	07-01-2011	CON. COMM. SUBMISSION	JAC/ CFD
2	08-21-2011	FOR ENGINEERING REVIEW	NRK
3	10-06-2011	REVISED SKYLINE DRIVE AND ROAD NAME	CFD
4	11-01-2011	BID SET	CFD
5	01-19-2012	DEP SUBMISSION	CFD
6	02-07-2012	UPDATE CONSTRUCTION SET	MAL
7	02-15-2012	UPDATED DETAIL SHEET	MAL
8	03-09-2012	MISC. REVISIONS	CFD
9			

STOP - CALL BEFORE YOU DIG!

THE FOLLOWING STATES REQUIRE NOTIFICATION BY EXCAVATORS, DESIGNERS, OR ANY PERSON PREPARING TO DISTURB THE EARTH'S SURFACE ANYWHERE IN THE STATE.
(MA, ME, NH, RI, VT 1-888-344-7233)
(CT 1-800-922-4455)
(NY 1-800-962-7962)

ISSUED FOR CONSTRUCTION

PROJECT No.:	W111022
DRAWN BY:	CFD
CHECKED BY:	JAB/SPD
DATE:	05/23/2011
SCALE:	AS NOTED
CAD I.D.:	w111022ss8_details

PROJECT:

SITE PLAN

FOR

Pulte Homes

THE RESIDENCES AT QUAIL RIDGE

LOCATION OF SITE
354 B GREAT ROAD & SKYLINE DR.
TOWN OF ACTON
MIDDLESEX COUNTY, MA

BOHLER ENGINEERING

352 TURNPIKE ROAD
SOUTHBOROUGH, MA 01772
Phone: (508) 480-9900
Fax: (508) 480-9080
www.BohlerEngineering.com

S.P. DECOURSEY
PROFESSIONAL ENGINEER

SHEET TITLE:

CONSTRUCTION DETAILS SHEET

SHEET NUMBER:

34
OF 36

REV 8 - 03/09/2012

RAIL SIZE/POST SPACING REQUIREMENTS

RAIL MATERIAL	MAXIMUM POST SPACING (FT)
4"x10" GRADE DENSE NO. 1	2.7'
6"x10" GRADE NO. 1	5.3'
6"x10" GRADE DENSE NO. 1	6.1'
6"x8" GRADE NO. 1	8.4'
6"x8" GRADE DENSE NO. 1	9.7'

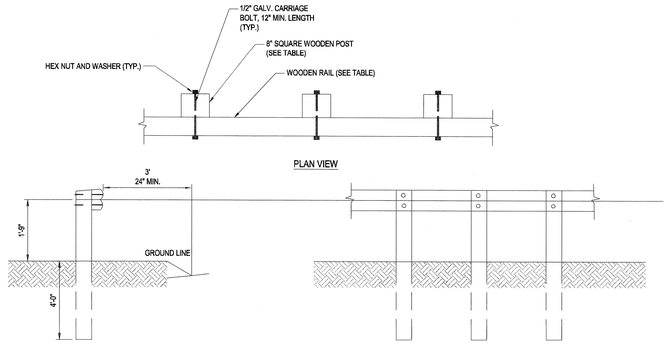

NOTES:
1. POSTS SHALL BE 8" SQUARE PRESSURE TREATED DOUGLAS FIR, OR APPROVED EQUAL.
2. RAILS SHALL BE PRESSURE DOUGLAS FIR OR APPROVED EQUAL, JOINTED AT POSTS.
3. CONTRACTOR SHALL COORDINATE RAIL DESIGN WITH STRUCTURAL ENGINEER FOR ALL LOCATIONS WHERE RAIL IS PROVIDED ATOP RETAINING WALLS.
4. SEE RETAINING WALL PLANS BY OTHERS FOR INSTALLATION REQUIREMENTS ADJACENT TO RETAINING WALLS.

6

WOODEN RAIL DETAIL

NOT TO SCALE

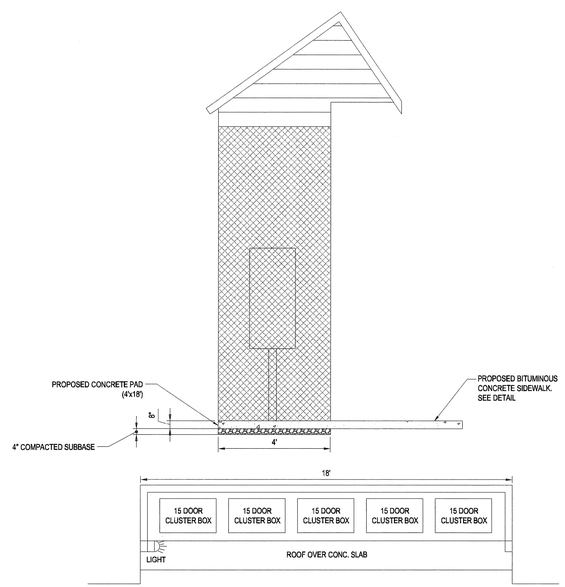

MAIL BOX ENCLOSURE

NOT TO SCALE

Description
A boardwalk is required to span a seasonal wet area on the 20 foot wide trail easement at Quail Ridge. The boardwalk location in this easement is shown in Figure 1.

Specifications
Boardwalk length: 170 feet
Number of 10 ft. sections: 17
Number of sills: 18

Survey
In the wetland area there are two significant depressions separated by about 40 feet of higher, rocky terrain. It was decided the rocky section would make a difficult foot path so the boardwalk is designed to traverse it. With this in mind a leveled string line was secured to stakes at 10 foot intervals in the wetland area at a height where the boardwalk stringers would clear the rocks. Where the string line reached the higher ground at the wetland extremes determined the boardwalk length of 170 feet. Height of the string line above ground at each stake was recorded and is shown in Figure 2. This will be the height of the sills supporting the boardwalk stringers. The soil was probed at each stake and found to be very firm, not bog like as at Grassy Pond where augured pipe is used in places to support the boardwalk. The probe typically penetrated the soil 2 to 4 inches before striking gravel, roots, and/or rocks.

Design
The boardwalk consists of seventeen 10 ft. long sections decked with 2"x6"x3' planks spaced typically 7/16" mounted on eighteen sills whose height conforms to the topography of the ground surface. A boardwalk section is illustrated in Figure 3 showing two types of sills, one for sill heights less than 15" made up of layers of 6"x6", 4"x6" timbers or combinations of the two and one for sill heights greater than 15" as illustrated in Figure 4. Each bottom sill will be secured with two 5/8" diameter rebar driven at an angle into the soil for stability. Figure 5 illustrates how the stringers are secured to the sills with hardware.

RFG

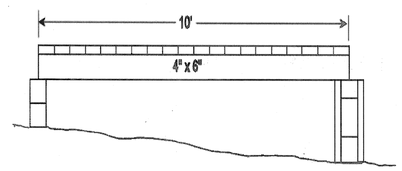

Figure 3 – Boardwalk Section Depicting Decking, Stringers & Sills

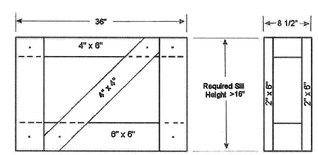

Figure 4 – High Sill Detail

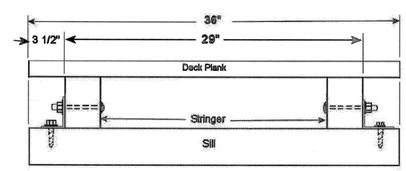

Figure 5 – Stringer-Sill Attachment Detail

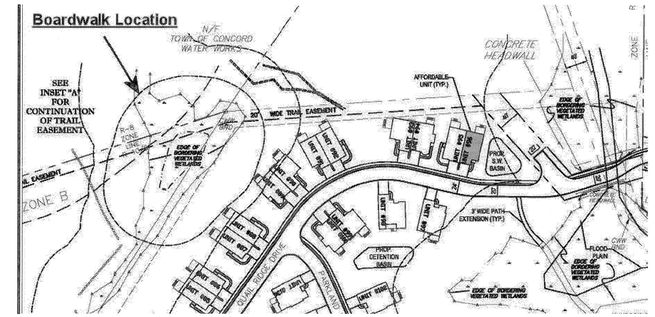

Figure 1 – Location of Boardwalk

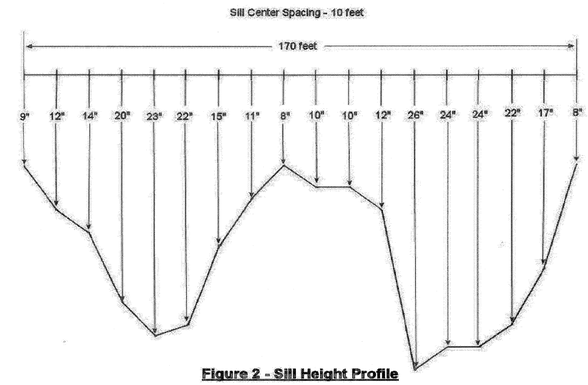

Figure 2 - Sill Height Profile

Materials

Stringers:
34 – 4"x6"x10' PT
Decking:
85 – 2"x6"x12' PT
Sills:
10 – 6"x6"x12' PT
7 – 4"x6"x12' PT
60 - 2"x6"x12' PT
2 – 2"x4"x12' PT
Hardware:
32 – Simpson Model 66T 5"x6" T strap
32 – 3/8"x2-1/2" galvanized lag screws
64 – 3/8"-16x4-1/2" galvanized carriage bolts
16 – 3/8"-16x8" galvanized carriage bolts
32 – 3/8"x10" galvanized carriage bolts
144– 3/8" galvanized flat washers
112 – 3/8"-16 galvanized hex head nuts
30 lbs – 16d (3-1/2") galvanized common nails
Re-bar, 5/8" dia. (TBD)

BOARDWALK DETAIL AT QUAIL RIDGE

NOT TO SCALE

BOHLER ENGINEERING
CORPORATE OFFICE: WARREN, NJ
CIVIL & CONSULTING ENGINEERS
SURVEYORS
PROJECT MANAGERS
ENVIRONMENTAL CONSULTANTS
LANDSCAPE ARCHITECTS
SOUTHBOROUGH, MA
BOWIE, MD
CHARLOTTE, NC
ALBANY, NY
PIEDMONT/OKLA. NY
CHALFONT, PA
PHILADELPHIA, PA
STROUDSBURG, PA
WARRENTON, VA
FORT LAUDERDALE, FL
TAMPA, FL

THE INFORMATION, DESIGN AND CONTENT OF THIS PLAN ARE PROPRIETARY AND SHALL NOT BE COPIED OR USED FOR PURPOSES OTHER THAN CONSTRUCTION PROVIDED BY BOHLER ENGINEERING. ONLY APPROVED, SIGNED AND SEALED PLANS SHALL BE UTILIZED FOR CONSTRUCTION PURPOSES. © 2008 BOHLER ENGINEERING

REVISIONS

REV	DATE	COMMENT	BY
1	07-01-2011	CON. COMM. SUBMISSION	JAC/ CFD
2	08-21-2011	FOR ENGINEERING REVIEW	NRK
3	10-06-2011	REVISED SKYLINE DRIVE AND ROAD NAME	CFD
4	11-01-2011	BID SET	CFD
5	01-19-2012	DEP SUBMISSION	CFD
6	02-07-2012	UPDATE CONSTRUCTION SET	MAL
7	02-15-2012	UPDATED DETAIL SHEET	MAL
8	03-09-2012	MISC. REVISIONS	CFD
9			

THE FOLLOWING STATES REQUIRE NOTIFICATION BY EXCAVATORS, DESIGNERS, OR ANY PERSON PREPARING TO DISTURB THE EARTH'S SURFACE ANYWHERE IN THE STATE.
(MA, ME, NH, RI, VT 1-888-344-7233)
(CT 1-800-922-4455)
(NY 1-800-962-7962)

ISSUED FOR CONSTRUCTION

PROJECT No.:	W111022
DRAWN BY:	CFD
CHECKED BY:	JAB/SPD
DATE:	05/23/2011
SCALE:	AS NOTED
CAD I.D.:	w111022ss8_details

PROJECT:

SITE PLAN FOR Pulte Homes

THE RESIDENCES AT QUAIL RIDGE
LOCATION OF SITE
354 B GREAT ROAD & SKYLINE DR.
TOWN OF ACTON
MIDDLESEX COUNTY, MA

BOHLER ENGINEERING
352 TURNPIKE ROAD
SOUTHBOROUGH, MA 01772
Phone: (508) 480-9900
Fax: (508) 480-9080
www.BohlerEngineering.com

S.P. DiCOURSEY
STEPHEN P. DiCOURSEY
CIVIL
PROFESSIONAL ENGINEER
No. 35424
No. 9308
No. 5408
VERMONT LICENSE No. 7110
CONNECTICUT LICENSE No. 23882
RHODE ISLAND LICENSE No. 7990

SHEET TITLE:

CONSTRUCTION DETAILS SHEET

SHEET NUMBER:
35
OF 36

REV 8 - 03/09/2012

P:\111\W111022\DWG\w111022ss8_details.dwg, 35-Details, 4/23/2010, 10:17:14 AM, cdesouza, Xerox5310-1.pc3, User434, 1:1

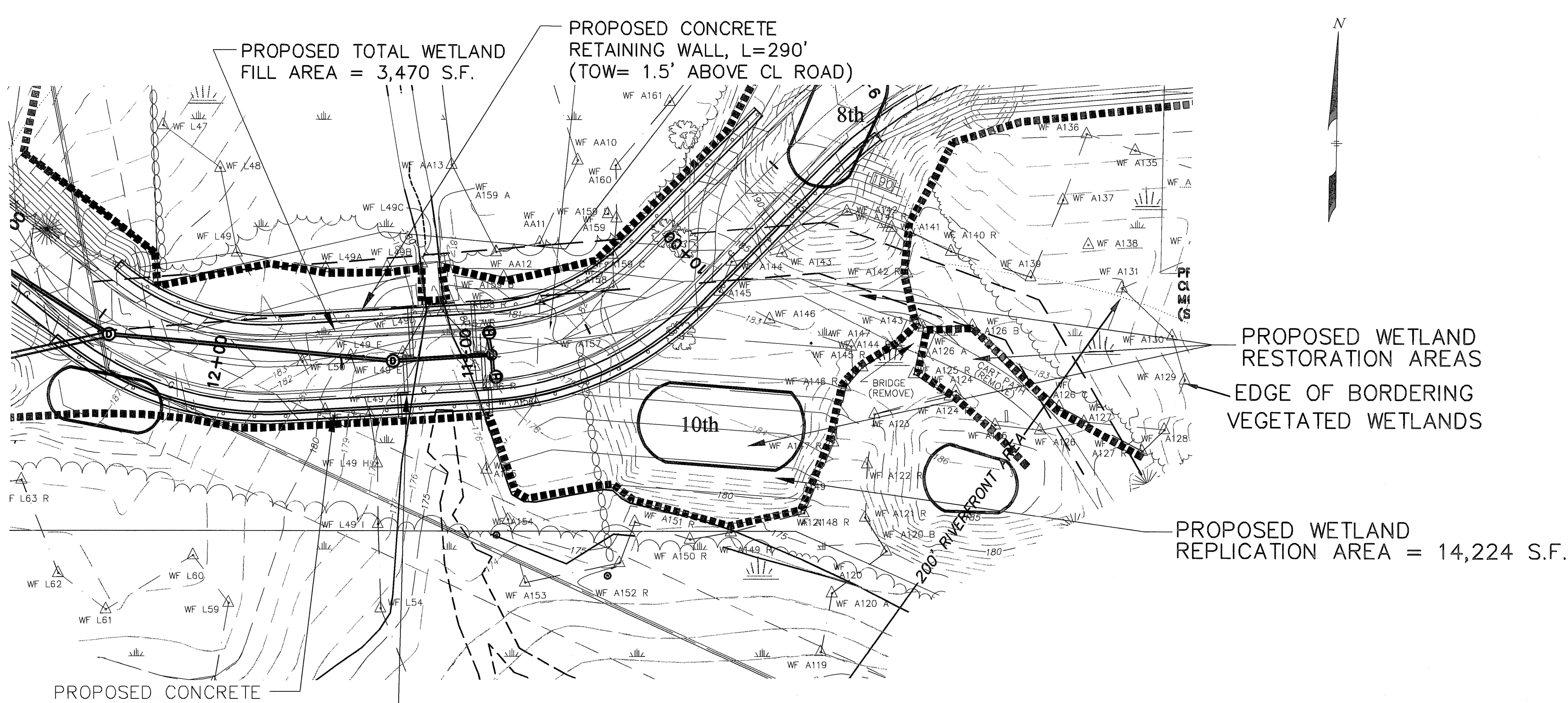

WETLAND CROSSING DETAIL
SCALE: 1"=40'

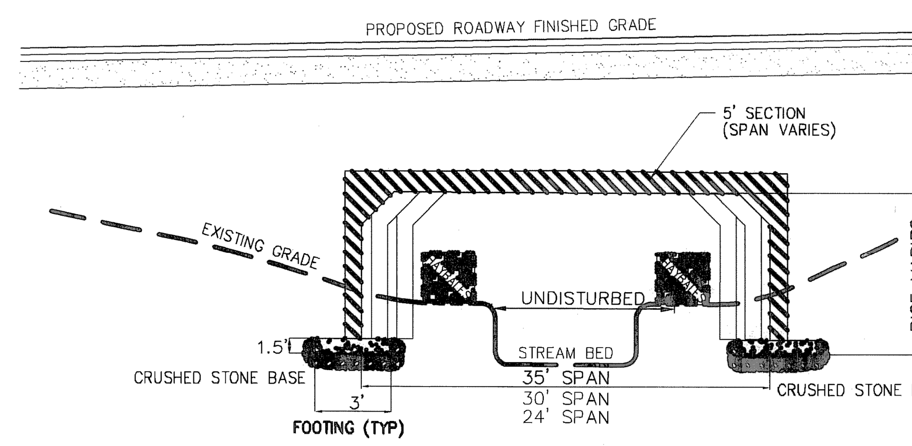

CULVERT SECTIONS			
SPAN	RISE	QUANTITY	BOTTOM FOOTING
35'	8'	2	173.50±
30'	8'	3	173.50±
24'	7'	4	174.50±

OPEN BOTTOM CULVERT CROSS SECTION
NOT TO SCALE

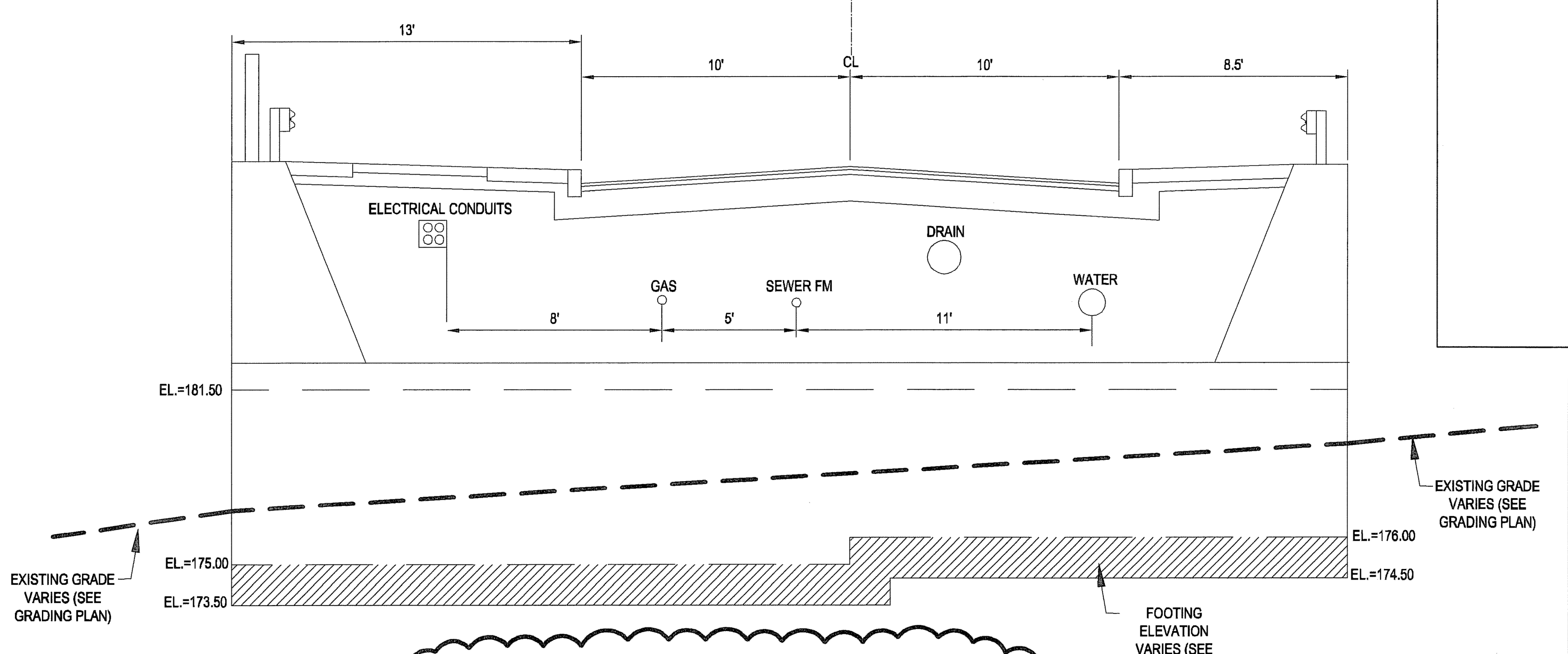

ROADWAY CROSS SECTION
TRHOUGH BOX CULVERT (STA. 11+09)
NOT TO SCALE

CULVERT SECTIONS *			
SPAN	RISE	QUANTITY	BOTTOM FOOTING
35'	8'	2	173.50±
30'	8'	3	173.50±
24'	7'	4	174.50±

* COORDINATE DESIGN WITH MANUFACTURER AND STRUCTURAL ENGINEER

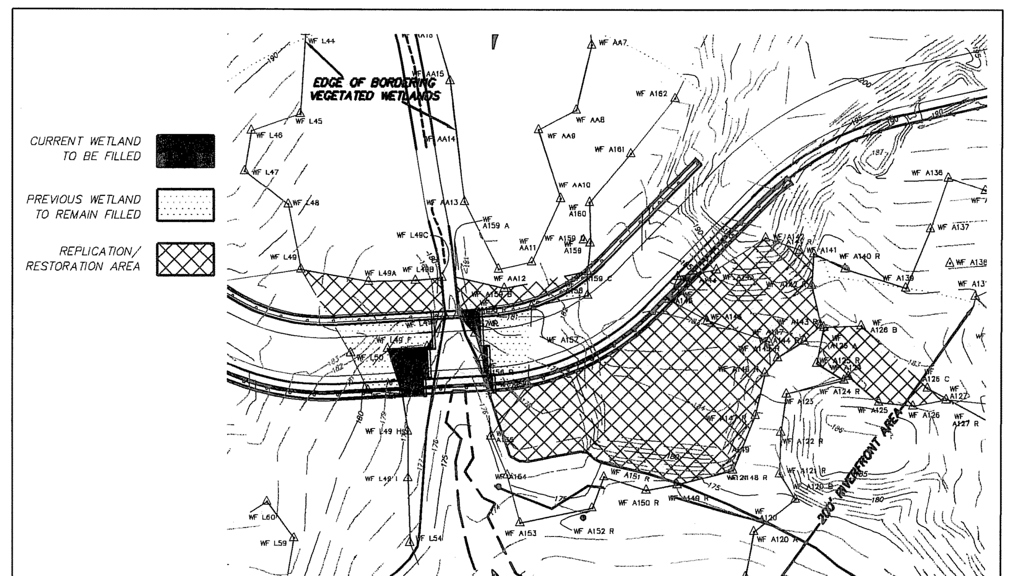

WETLAND REPLICATION/FILL DETAIL
SCALE: 1"=80'

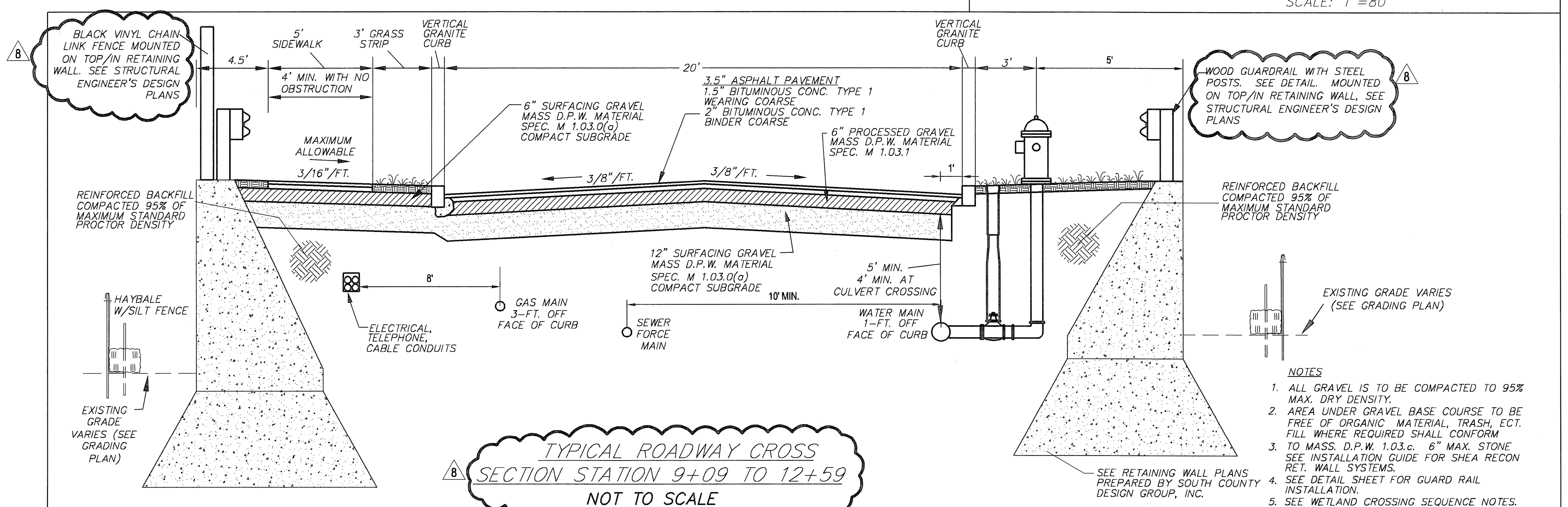

NOTES

1. ALL GRAVEL IS TO BE COMPACTED TO 95% MAX. DRY DENSITY.
2. AREA UNDER GRAVEL BASE COURSE TO BE FREE OF ORGANIC MATERIAL, TRASH, ECT. FILL WHERE REQUIRED SHALL CONFORM
3. TO MASS. D.P.W. 1.03.c. 6" MAX. STONE SEE INSTALLATION GUIDE FOR SHEA RECON RET. WALL SYSTEMS.
4. SEE DETAIL SHEET FOR GUARD RAIL INSTALLATION.
5. SEE WETLAND CROSSING SEQUENCE NOTES.

TYPICAL ROADWAY CROSS
SECTION STATION 9+09 TO 12+59
NOT TO SCALE

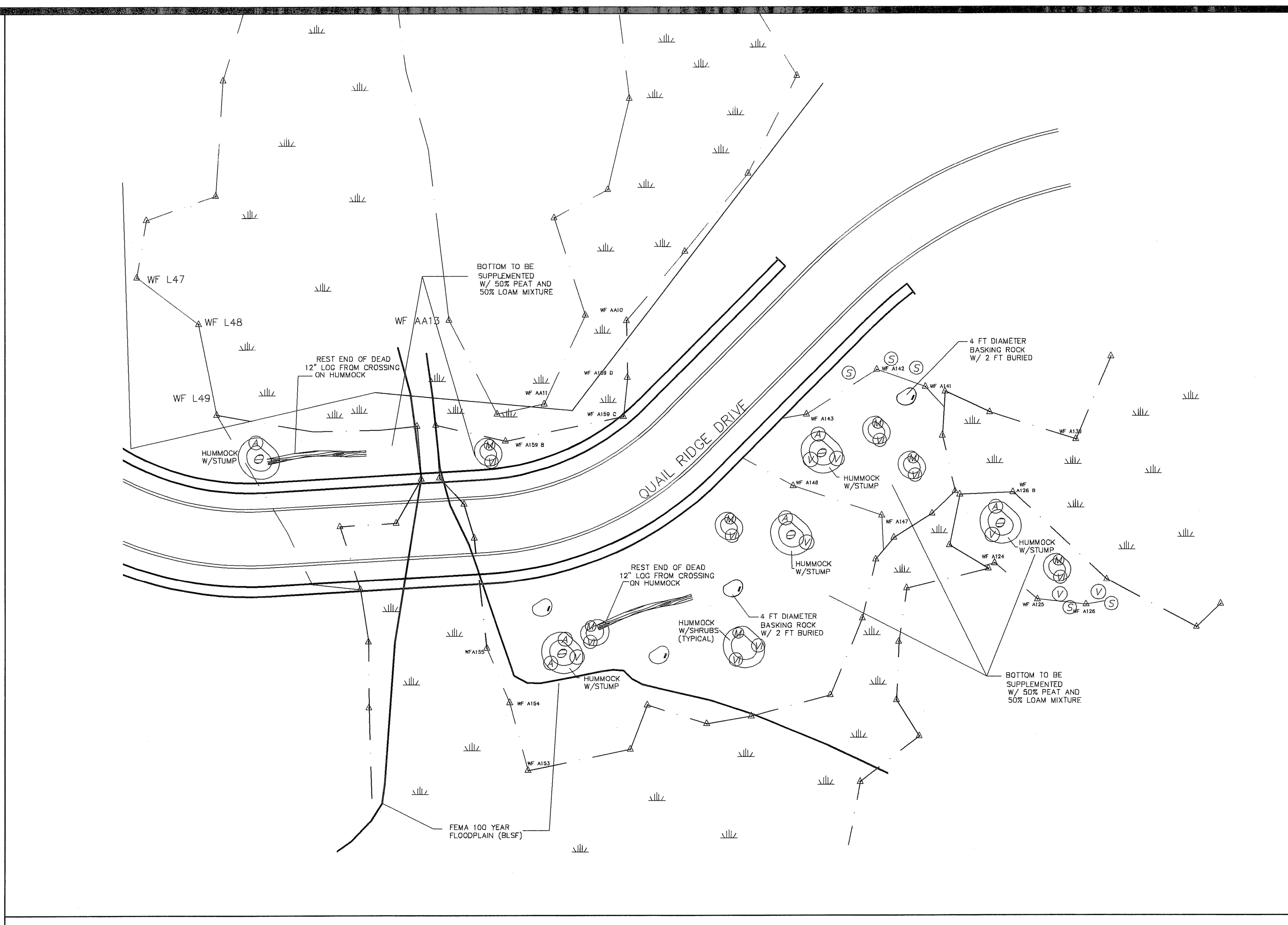

WETLAND REPLICATION PLAN
SCALE: 1"=40'

PLANT LIST

SYMBOL/BOTANICAL NAME	COMMON NAME	NO.	SIZE
SHRUBS			
A/AMELANCHIER LAEVIS	SERVICEBERRY	6	4–5' Ht
V/ILEX VERTICILLATA "WINTER RED"	WINTER RED WINTERBERRY	7	3–4' Ht
S/SALIX DISCOLOR	PUSSY WILLOW	5	2–3' Ht
M/MYRICA PENSYLVANICA	NORTHERN BAYBERRY	7	12–18" Ht
VI/VIBURNUM DENTATUM	ARROWWOOD VIBURNUM	8	12–18" Ht

*SEE LANDSCAPE PLAN FOR SHRUB PLANTING PROCEDURE

PROCEDURE FOR CONSTRUCTION OF WETLAND REPLICATION AREA

1. INSTALL AND MAINTAIN SILTATION BARRIERS ON THE EDGE OF THE EXISTING WETLAND ADJACENT TO PROPOSED REPLICATION AREA AND ADJACENT TO THE PROPOSED ROADWAY CROSSING OF WETLAND.
2. EXCAVATE AND GRADE THE REPLICATION AREA TO A DEPTH OF APPROXIMATELY ONE FOOT BELOW THE GRADES SHOWN ON THE REPLICATION AREA PLAN.
3. EXCAVATION OF WETLAND AREA TO BE DISTURBED BY ROADWAY CONSTRUCTION SHALL OCCUR AFTER THE REPLICATION WETLAND HAS BEEN EXCAVATED TO SUBGRADE. THE TOPSOIL OR PEAT FROM THE FILL AREA SHALL NOT BE USED IN THE REPLICATION AREA. DO NOT USE VEGETATION FROM FILL AREA IN REPLICATION AREA, AS TO PREVENT THE REPLANTING OF ANY INVASIVE SPECIES THAT MAY BE PRESENT. STOCKPILING OF MATERIAL SHALL BE ALLOWED ONLY TEMPORARILY. FILL REQUIRED TO BRING REPLICATION AREA TO GRADE SHALL BE COMPOSED OF A 50% PEAT AND 50% LOAM MIXTURE.
4. THE REPLICATION AREA SHOULD BE GRADED TO BE LEVEL WITH THE ADJACENT NATURAL WETLAND. HAND LEVELING AND RAKING SHALL BE USED TO AVOID SOIL COMPACTION. ANY POTHOLES OR DEPRESSIONS SHOULD BE FILLED TO AVOID STAGNANT PUDDLES. ANY BERMS RESULTING BETWEEN THE CREATED AND NATURAL WETLANDS SHOULD BE REMOVED TO ALLOW UNRESTRICTED HYDRAULIC CONNECTION.
5. SIDE SLOPES AT THE REPLICATION AREA SHALL NOT EXCEED A 2:1 SLOPE AND SHALL IMMEDIATELY BE LOAMED AND SEEDED. HUMMOCKS, ROCKS, LOGS, STUMPS, MICROPOOL AND PLANTINGS SHALL THEN BE INSTALLED IN ACCORDANCE WITH THE WETLAND REPLICATION PLAN. REPLICATION AREA SHALL BE SEEDED WITH A HYDROPHILIC GRASS MIXTURE OF REDTOP, BLUEJOINT AND SWITCHGRASS, AT A RATE OF 1LB/ PER 1,000 S.F.
6. AFTER THE REPLICATION AREA HAS BEEN CONSTRUCTED, STAKED HAYBALES SHALL BE PLACED BETWEEN THE REPLICATION AREA AND ANY DISTURBED UPLAND AREAS TO PREVENT SILTATION OF THE REPLICATION AREA.
7. THE REPLICATION AREA (EITHER VEGETATED NATURALLY OR WITH COMMERCIALLY PURCHASED SUPPLEMENTS) SHOULD BE INSPECTED AT THE END OF THE FIRST AND SECOND GROWING SEASONS. REPLANTING AND REPAIRS SHOULD BE SCHEDULED AS NEEDED TO PROVIDE ADEQUATE COVER IN ACCORDANCE WITH THE WETLAND REPLICATION PLAN.

CONSTRUCTION SEQUENCE FOR WETLAND CROSSING

1. INSTALL SILTATION BARRIER PRIOR TO THE COMMENCEMENT OF ANY CONSTRUCTION AT ALL LOCATIONS SHOWN ON THE PLAN. SET SILTATION BARRIER LINES IN THE LOCATIONS STAKED BY THE DESIGN ENGINEER.
2. NOTIFY CONSERVATION COMMISSION FORTY-EIGHT HOURS (48) HOURS PRIOR TO STARTING DATE OF CONSTRUCTION.
3. CLEAR AND GRUB AREA WITHIN WETLANDS CROSSING AND DESIGNATED AREA FOR WETLANDS REPLICATION.
4. EXCAVATE MATERIAL WITHIN WETLANDS REPLICATION AREA TO ONE (1) FOOT BELOW GRADES SHOWN ON PLAN. STOCKPILE EXCAVATED MATERIAL OUTSIDE OF THE BUFFER ZONE.
5. STRIP ORGANIC MATERIAL FROM AREA WITHIN WETLANDS CROSSING. DO NOT USE EXCAVATED ORGANIC MATERIAL FROM FILL AREA IN THE WETLANDS REPLICATION AREA TO THE GRADES SHOWN ON THE PLAN. COMPLETE WETLAND REPLICATION AREA IN COMPLIANCE WITH "PROCEDURES FOR CONSTRUCTION OF WETLAND REPLICATION AREA".
6. INSTALL RET-WALLS & CULVERT.
7. PLACE AND COMPACT GRAVEL FILL FOR QUAIL RIDGE DRIVE WITHIN WETLAND CROSSING TO THE GRADES SHOWN ON THE PLAN.
8. STABILIZE SLOPES IN WETLAND FILL AREA WITH 6" OF LOAM AND HYDROSEEDING. INSTALL PROPOSED UNDERGROUND UTILITIES.
10. INSTALL ROADWAY SURFACE TO THE WIDTH SHOWN ON THE PLAN.
11. LOAM AND SEED ALL DISTURBED SURFACES WHICH HAVE NOT BEEN STABILIZED.
12. REMOVE SILTATION BARRIERS AFTER ALL VEGETATION IS ESTABLISHED AND THE APPROVING AUTHORITY HAS ISSUED A CERTIFICATE OF COMPLIANCE.

WETLAND RESTORATION NOTES

1. ENGINEER SHALL STAKE LIMIT OF PREVIOUS WETLAND PRIOR TO ANY WORK.
2. CONTRACTOR SHALL EXCAVATE EXISTING SOIL DOWN TO EXISTING COVERED HYDRIC SOILS. AREA SHALL THEN BE RAKED SMOOTH AND PLANTED IN ACCORDANCE WITH THE WETLAND REPLICATION PLAN.
3. IF AREA WITHIN PREVIOUS WETLAND LIMIT IS COVERED WITH A GRAVEL SIDEWALK, THE GRAVEL SHALL BE EXCAVATED AND REPLACED WITH SOIL CONSISTING OF A 50% PEAT AND 50% LOAM MIXTURE. AREA SHALL SHALL THEN BE PLANTED IN ACCORDANCE WITH THE WETLAND REPLICATION PLAN.
4. IF AREA WITHIN PREVIOUS WETLAND LIMIT IS COVERED WITH A WOODEN BRIDGE, THE BRIDGE SHALL BE DISMANTLED AND REMOVED AND THE PILE FOOTINGS PULLED. ALL FOOTING HOLES SHALL THEN BE FILLLED WITH SOIL CONSISTING OF A 50% PEAT AND 50% LOAM MIXTURE. AREA SHALL THEN BE RAKED SMOOTH AND PLANTED IN ACCORDANCE WITH THE WETLAND REPLICATION PLAN.
5. IF AFTER TWO GROWING SEASONS, THE WETLAND IS NOT RESTABLISHED TO THE SATISFACTION OF THE CONSERVATION COMMISSION, THE AREAS SHALL BE REPLANTED IN ACCORDANCE WITH THE WETLAND REPLICATION PLAN.

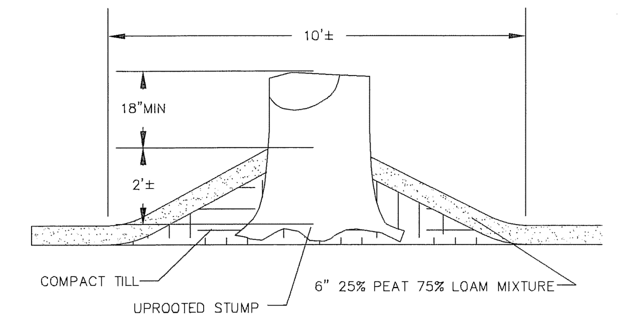

HUMMOCK W/ STUMP

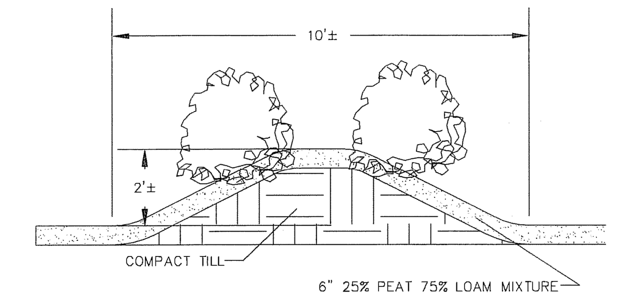

HUMMOCK W/ SHRUBS
N.T.S.

NOTE:

THIS PLAN REFERENCES APPROVED ACTON CONSERVATION APPROVED REPLICATION PLANS ENTITLED

"WETLAND CROSSING AND REPLICATION DETAILS"
SHEET 39 OF 44

PREPARED BY STAMSKI AND MCNARY INC., REV 1-16-2009

BOHLER ENGINEERING
CIVIL & CONSULTING ENGINEERS
SURVEYORS
PROJECT MANAGERS
ENVIRONMENTAL CONSULTANTS
LANDSCAPE ARCHITECTS

REVISIONS

REV	DATE	COMMENT	BY
1	07-01-2011	CON. COMM. SUBMISSION	JAC/ CFD
2	08-21-2011	FOR ENGINEERING REVIEW	NRK
3	10-06-2011	REVISED SKYLINE DRIVE AND ROAD NAME	CFD
4	11-01-2011	BID SET	CFD
5	01-19-2012	DEP SUBMISSION	CFD
6	02-07-2012	UPDATE CONSTRUCTION SET	MAL
7	02-15-2012	UPDATED DETAIL SHEET	MAL
8	03-09-2012	MISC. REVISIONS	CFD
9			

STOP - CALL BEFORE YOU DIG!

THE FOLLOWING STATES REQUIRE NOTIFICATION BY EXCAVATORS, DESIGNERS, OR ANY PERSON PREPARING TO DISTURB THE EARTH'S SURFACE ANYWHERE IN THE STATE.
(MA, ME, NH, RI, VT 1-888-344-7233)
(CT 1-800-922-4455)
(NY 1-800-962-7962)

ISSUED FOR CONSTRUCTION

PROJECT No.:	W111022
DRAWN BY:	CFD
CHECKED BY:	JAB/SPD
DATE:	05/23/2011
SCALE:	AS NOTED
CAD I.D.:	w111022ss8_wetland_cfd

PROJECT:

SITE PLAN
FOR
Pulte Homes
THE RESIDENCES AT QUAIL RIDGE
LOCATION OF SITE
354 B GREAT ROAD & SKYLINE DR.
TOWN OF ACTON
MIDDLESEX COUNTY, MA

BOHLER ENGINEERING
352 TURNPIKE ROAD
SOUTHBOROUGH, MA 01772
Phone: (508) 480-9900
Fax: (508) 480-9080
www.BohlerEngineering.com

S.P. DECOURSEY
PROFESSIONAL ENGINEER
STEPHEN P. DeCOURSEY CIVIL No. 36424
VERMONT LICENSE No. 7110
CONNECTICUT LICENSE No. 23862
RHODE ISLAND LICENSE No. 7990

SHEET TITLE:
WETLAND CROSSING AND REPLICATION DETAILS

SHEET NUMBER:
36
OF 36

REV 8 - 03/09/2012