TRAFFIC OPERATIONS STUDY

MASSACHUSETTS AVENUE/CONNECTOR ROAD INTERSECTION
Acton, Massachusetts

March 21, 2013

Prepared For
Shops at Kelly's Corner, LLC

TEPP LLC TRANSPORTATION ENGINEERING, PLANNING AND POLICY

TRAFFIC OPERATIONS STUDY

MASSACHUSETTS AVENUE/CONNECTOR ROAD INTERSECTION
Acton, Massachusetts

March 21, 2013

Prepared For
Shops at Kelly's Corner, LLC

TEPP LLC TRANSPORTATION ENGINEERING, PLANNING AND POLICY

93 Stiles Road, Suite 201, Salem, New Hampshire 03079 USA
800 Turnpike Street, Suite 300, North Andover, Massachusetts 01845 USA
Phone (603) 212-9133 and Fax (603) 226-4108
Email tepp@teppllc.com and Web www.teppllc.com

CONTENTS

SUMMARY 1
Introduction 1
Existing Intersection 1
Proposed Conditions 2
Study Scope 2
Conclusions 2
INTRODUCTION 5
Project Description 5
Existing Intersection 5
Proposed Conditions 7
Study Scope 7
EXISTING CONDITIONS 9
Introduction 9
Physical Conditions 9
Traffic Volumes 11
FUTURE CONDITIONS 15
Introduction 15
Background Traffic Growth 15
No-Build Traffic Volumes 15
Site Traffic 16
Build Traffic Volumes 21
Traffic-Volume Changes 21
TRAFFIC-SIGNAL WARRANTS 25
CAPACITY ANALYSIS 29
Introduction 29
Methods 29
Results 30

CONCLUSIONS..... 33
APPENDIX
Appendix A: Site Plan
Appendix B: Traffic Counts
Appendix C: Monthly Traffic Variations
Appendix D: Capacity Analysis Worksheets

TABLES

Table 1. Existing weekday traffic volumes 12
Table 2. Calculated trip generation. 18
Table 3. Trip distribution/assignment. 19
Table 4. Traffic-volume changes. 23
Table 5. Traffic-control-signal warrants for the 2013 existing condition. 26
Table 6. Traffic-control-signal warrants for the 2018 build condition. 27
Table 7. Level-of-service criteria for intersections. 30
Table 8. Capacity analysis for weekday PM peak hour. 31
Table 9. Capacity analysis for Saturday midday peak hour 32

FIGURES

Figure 1. Project location. 6
Figure 2. 2013 existing peak-hour traffic volumes. 13
Figure 3. 2018 no-build weekday peak-hour traffic volumes. 16
Figure 4. Peak-hour site trips. 20
Figure 5. 2018 build peak-hour traffic volumes. 22

SUMMARY

INTRODUCTION

TEPP LLC has prepared, for Shops at Kelly's Corner, LLC, this traffic operations study (TOS) of the Massachusetts Avenue (Massachusetts Route 111)/connector road intersection in the Town of Acton, Massachusetts.

EXISTING INTERSECTION

The existing Massachusetts Avenue/connector road intersection is about 750 feet (ft) east of Massachusetts Avenue/Main Street (Massachusetts Route 27) intersection.

The existing intersection has four legs and:

- Massachusetts Avenue is the major east-west street
- the connector road is the minor north leg
- the minor south leg is the TD Bank east driveway
- all legs have one-lane approaches
- the connector road approach operates as if under STOP-sign control
- driveway approach is under STOP-sign control

The connector road is about 600-ft long. The connector road terminates at Main Street about 700 ft north of Massachusetts Avenue. The Main Street/connector road intersection has a T configuration, with Main Street as the major street and the connector road as the minor leg. At this intersection, the connector road approach is under STOP sign control.

Commercial development surrounds the intersection, with:

- a commercial/office building in the northwest quadrant
- Acton Plaza shopping center in the northeast quadrant
- TD Bank in the southwest quadrant
- the Acton Tire, Inc. tire store in the southeast quadrant

PROPOSED CONDITIONS

Shops at Kelly's Corner, LLC proposed to redevelopment the site in the southeast quadrant of the intersection. The redevelopment will remove the Acton Tire, Inc. tire store and replace it with a CVS/pharmacy with a drive-through.

Proposed modifications to the Massachusetts Avenue/connector road intersection include:

- on the Massachusetts Avenue approaches, one added left-turn lane
- use of the south leg as a shared driveway serving TD Bank and CVS/pharmacy
- on the driveway approach, one left-turn and through-movement lane and one right-turn lane
- a traffic-control signal

Other future conditions in the area include retaining unsignalized intersections along Massachusetts Avenue serving as:

- TD Bank west driveway
- CVS/pharmacy east driveway

STUDY SCOPE

This TOS analyzes traffic operations at the Massachusetts Avenue/connector road intersection under the following conditions:

- 2012 existing
- 2018 no-build (with background traffic growth and without the proposed redevelopment)
- 2018 build unsignalized (with background traffic growth and with the proposed redevelopment)
- 2018 build signalized

This TOS includes:

- traffic-control-signal warrants analysis
- capacity analysis for the weekday PM and Saturday midday peak hours

CONCLUSIONS

This TOS concludes that:

- the Massachusetts Avenue/connector road intersection meets traffic-control-signal warrants under the 2013 and 2018 build conditions
- capacity analysis for the weekday PM and Saturday midday peak hours indicates that the potential intersection geometry and signalization provides for appropriate levels of service
- Shops at Kelly's Corner, LLC reports that consultations with Town staff indicate support for signalization

INTRODUCTION

PROJECT DESCRIPTION

TEPP LLC has prepared, for Shops at Kelly's Corner, LLC, this TOS of the Massachusetts Avenue/connector road intersection in the Town of Acton, Massachusetts. Figure 1 shows the project location and the site plan is in Appendix A.

EXISTING INTERSECTION

The existing Massachusetts Avenue/connector road intersection is about 750 ft east of Massachusetts Avenue/Main Street intersection.

The existing intersection has four legs and:

- Massachusetts Avenue is the major east-west street
- the connector road is the minor north leg
- the minor south leg is the TD Bank east driveway
- all legs have one-lane approaches
- the connector road approach operates as if under STOP-sign control
- driveway approach is under STOP-sign control

The connector road is about 600-ft long, and terminates as if under STOP-sign control at Main Street, about 700 ft north of Massachusetts Avenue.

Commercial development surrounds the intersection, with:

- a commercial/office building in the northwest quadrant
- Acton Plaza shopping center in the northeast quadrant
- TD Bank in the southwest quadrant
- the Acton Tire, Inc. tire store in the southeast quadrant

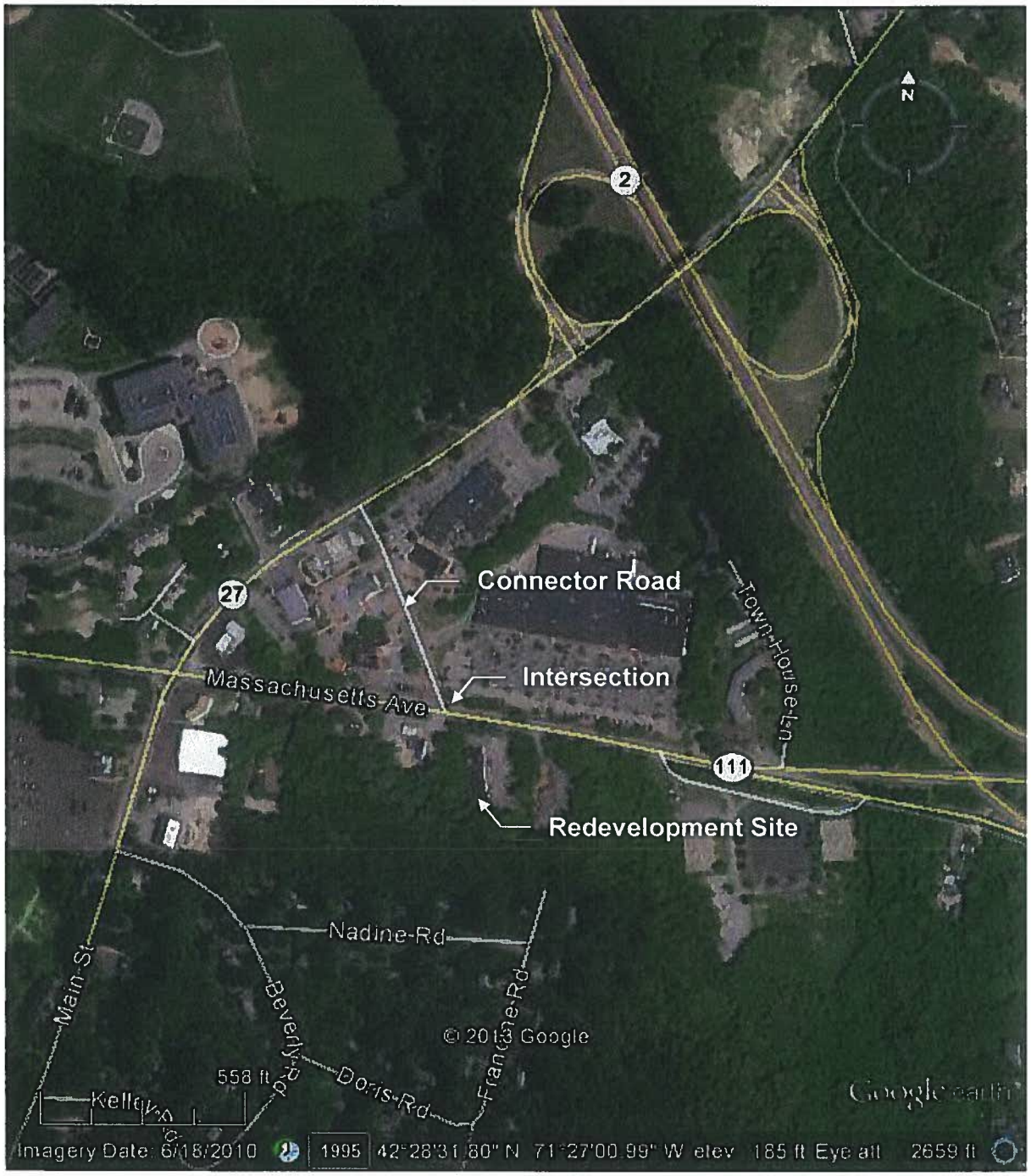

Figure 1. Project location.

PROPOSED CONDITIONS

Shops at Kelly's Corner, LLC proposes to redevelopment the site in the southeast quadrant of the intersection. The redevelopment will remove the Acton Tire, Inc. tire store and replace it with a CVS/pharmacy with a drive-through.

The proposed Massachusetts Avenue/connector road intersection will include:

- on the Massachusetts Avenue approaches, one added left-turn lane
- use of the south leg as a shared driveway serving TD Bank and CVS/pharmacy
- on the driveway approach, one left-turn and through-movement lane and one right-turn lane
- a traffic-control signal

Other future conditions in the area include retaining unsignalized intersections along Massachusetts Avenue serving as:

- TD Bank west driveway
- CVS/pharmacy east driveway

STUDY SCOPE

This TOS analyzes traffic operations at the Massachusetts Avenue/connector road intersection under the following conditions:

- 2013 existing
- 2018 no-build (with background traffic growth and without the proposed redevelopment)
- 2018 build unsignalized (with background traffic growth and with the proposed redevelopment)
- 2018 build signalized

This TOS includes:

- traffic-control-signal warrants analysis
- capacity analysis for the weekday PM and Saturday midday peak hours

EXISTING CONDITIONS

INTRODUCTION

Existing conditions include:

- physical conditions of the transportation network, roads and intersections
- traffic volumes
- other relevant information

PHYSICAL CONDITIONS

TRANSPORTATION NETWORK

Figure 1 shows the area transportation network, which includes the following existing streets:

- Massachusetts Avenue
- Main Street
- Massachusetts Route 2 (MA 2)
- connector road

Massachusetts Avenue:

- is an arterial street under the jurisdiction of the Commonwealth of Massachusetts
- connects with the community of West Acton, to the west
- connects with MA 2, to the east
- generally has one lane per direction
- has sidewalk along both sides west of the connector road and along the south side east of the connector road
- is relatively tangent and has minor-to-moderate grades
- has a posted speed limit of 35 miles per hour near the connector road intersection

Main Street:

- is an arterial street under local jurisdiction
- connects with MA 2 and central Acton, to the north
- connects with the Town of Maynard, Massachusetts, to the south

MA 2:

- is an arterial highway of regional importance under the jurisdiction of the Commonwealth of Massachusetts
- connects with Interstate Route 495, to the west
- connects with Interstate Route 95/Massachusetts Route 128 and the City of Boston, Massachusetts, to the east

The connector road:

- is privately owned but effectively open to the public
- serves as a northeastern bypass of the Massachusetts Avenue/Main Street signalized intersection
- generally has one lane per direction
- is relatively tangent and is on a general southbound downgrade
- has some sidewalk
- has no posted speed limit
- provides access for abutting commercial land uses
- terminates at Massachusetts Avenue about 750 ft east of Main Street and at Main Street about 700 ft north of Massachusetts Avenue

The Main Street/connector road intersection has a T configuration, with Main Street as the major street and the connector road as the minor leg. At this intersection, the connector road approach is under STOP sign control.

MASSACHUSETTS AVENUE/CONNECTOR ROAD INTERSECTION

The existing Massachusetts Avenue/connector road intersection is about 750 ft east of Massachusetts Avenue/Main Street intersection.

The existing intersection has four legs and:

- Massachusetts Avenue is the major east-west street
- the connector road is the minor north leg

- a TD Bank driveway is the minor south leg
- all legs have one-lane approaches
- the connector road approach operates as if under STOP-sign control
- the TD Bank driveway approach is under STOP-sign control

Commercial development surrounds the intersection, with:

- a commercial/office building in the northwest quadrant
- Acton Plaza shopping center in the northeast quadrant
- TD Bank in the southwest quadrant
- the Acton Tire, Inc. tire store in the southeast quadrant

TRAFFIC VOLUMES

TRAFFIC COUNTS

TEPP LLC relied on automatic traffic recorder counts (ATRs) on Massachusetts Avenue west of the connector road, conducted by others during March 2010.[1]

TEPP LLC obtained turning movement counts (TMCs) at the following intersections:

- Massachusetts Avenue/connector road/TB Bank east driveway
- Massachusetts Avenue/TD Bank west driveway
- Massachusetts Avenue/Acton Tire, Inc. tire store driveway

The TMCs were conducted on:

- Wednesday, October 17, 2012, from 7:00 AM to 7:00 PM
- Saturday, October 20, 2012, from 11:00 AM to 2:00 PM

The traffic count data are in Appendix B.

MONTHLY ADJUSTMENT

The Massachusetts Department of Transportation (MassDOT) Highway Division reports monthly traffic-volume variations[2] for urban arterials, collectors and rural arterials in Appendix

[1] Vanasse & Associates, Inc., *Traffic Impact Assessment—Proposed TD Bank* (Andover, Massachusetts, April 15, 2010), page 3.

C. Based on this MassDOT information, the October 2012 traffic volumes are greater than average month and would be multiplied by 0.984 to reduce to average-month conditions.

Accordingly, the October 2012 traffic volumes:

- were reduced to average-month conditions for traffic-control-signal warrants analysis
- were not reduced to average month conditions for capacity analysis
- were increased by 1.0 percent to reflect 2013 conditions

EXISTING TRAFFIC VOLUMES

Table 1 and Figure 2 show 2013 existing weekday peak-hour volumes.

Table 1. Existing weekday traffic volumes.

Location and Day	Day	Daily Vehicles	Peak Hour			
				Vehicles[a]	Percent Direction	Percent of Daily
Massachusetts Avenue West of Connector Road	Weekday	12,374	PM	1,051	60 WB	8.5
	Saturday	10,928	Midday	1,108	54 EB	10.1
Connector Road North of Massachusetts Avenue	Weekday	-[b]	PM	630	51 SB	-
	Saturday	-	Midday	725	50 SB	-

[a]Total of both directions.

[b]Not available.

EB = eastbound, WB = westbound, SB = southbound, NB = northbound.

Table 1 shows that Massachusetts Avenue:

- carries about 12,374 vehicles per weekday
- carries about 8.5 percent of the weekday daily volume during PM peak hour, with about 60 percent of this volume westbound
- carries about 10,928 vehicles per Saturday
- carries about 10.1 percent of the Saturday daily volume during midday peak hour, with about 54 percent of this volume eastbound

[2] MassDOT Highway Division, *2007 Weekday Seasonal Factors*.

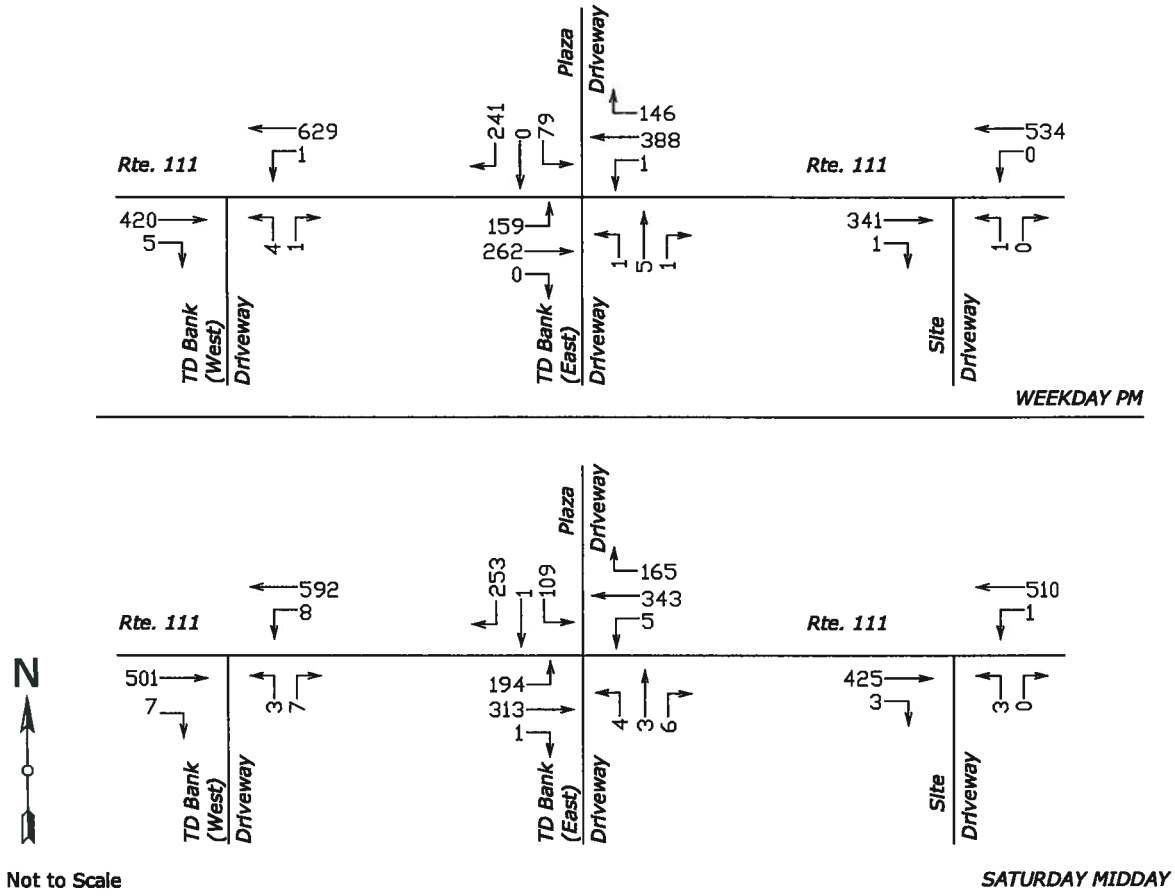

Figure 2. 2013 existing peak-hour traffic volumes.

Table 1 shows that the connector road:

- carries about 630 vehicles during the weekday PM peak hour, with about 51 percent of this volume southbound
- carries about 725 vehicles during the Saturday midday peak hour, with about 50 percent of this volume southbound

FUTURE CONDITIONS

INTRODUCTION

Future conditions include:

- future no-build traffic volumes, with background traffic growth and without the proposed development
- future build traffic volumes, with background traffic growth and with the proposed development

BACKGROUND TRAFFIC GROWTH

Background traffic growth is:

- independent of the proposed development
- related to land development in the immediate area, population and economic development in the region and changes in travel patterns in the region
- generally considers two factors: a general traffic-growth rate and specific planned land developments in the immediate area

TEPP LLC used a one-percent general traffic growth rate. This rate may be conservative (high) given the recent trend to reduced traffic growth.[3]

TEPP LLC consulted with Town staff regarding specific planned land development in the immediate area. The consultation indicated a potential redevelopment of the former McDonald's restaurant site along the west side of Main Street about 300 ft south of Massachusetts Avenue. The potential land use is a Panera restaurant of about 4,100-sf floor area.

NO-BUILD TRAFFIC VOLUMES

The background traffic growth described above was applied to the 2013 existing traffic volumes. Figure 3 shows the resulting 2018 no-build weekday peak-hour volumes.

[3] The most-recent-available 2006 Mass DOT Traffic Growth Summary shows 0.3 percent annual growth for all Mass DOT Districts and 0.8 percent annual growth for District 4, which includes the Town.

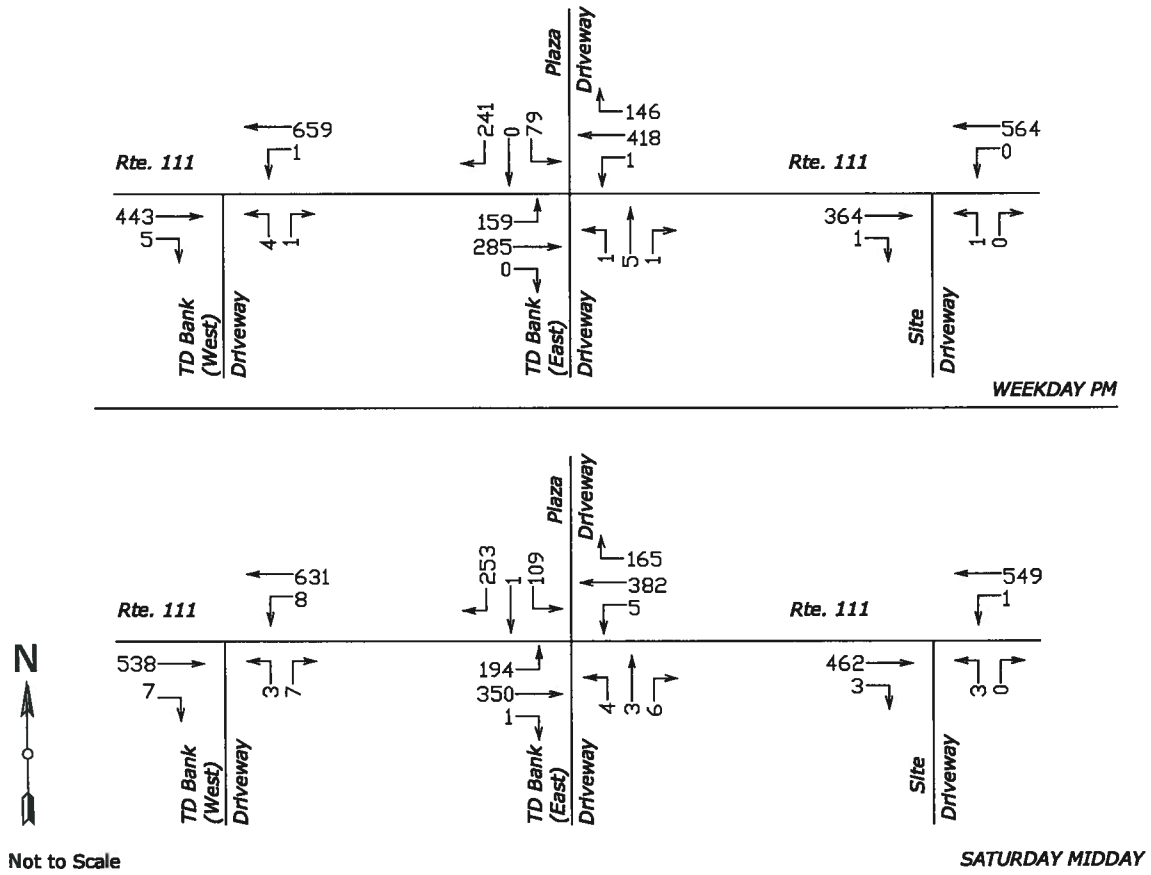

Figure 3. 2018 no-build weekday peak-hour traffic volumes.

SITE TRAFFIC

BASIC TRIP GENERATION FOR INDIVIDUAL LAND USES

The Institute of Transportation Engineers (ITE) publishes trip-generation information in the authoritative reference *Trip Generation Manual*. This information is based on empirical data for a variety of land uses including:

- tire store, land use 848, based on floor area[4]
- pharmacy/drugstore with drive-through window, land use 881, based on floor area[5]

Table 2 presents calculated vehicle-trips for the existing tire store of 6,000-sf floor area, and for the future pharmacy/drugstore with drive-through window of 13,602-sf floor area. Actual field counts for the existing tire store were lower than per ITE.

INTERNAL TRIP CAPTURE

The existing bank and future pharmacy/drugstore with drive-through window uses will constitute a multi-use site. ITE states that "the total generation of vehicle trips entering and exiting the multi-use site may be reduced from simply a sum of the individual, discrete trips generated by each land use."[6] Internal capture trips were limited to 20 percent of the actual field volumes of the existing bank. Accordingly, Table 2 shows calculated external vehicle-trips that reflect internal-capture trip reductions based on ITE information.[7]

TRIP TYPES

ITE also compiles trip-type information in the authoritative *Trip Generation Handbook: A Recommended Practice*. This information is based on empirical data for a variety of land uses, including:

- tire store, land use 848[8]
- pharmacy/drugstore with drive-through window, land use 881[9]

---

[4] ITE, *Trip Generation*, 8th edition (Washington DC, 2008), pages 1746 through 1767

[5] ITE, *Trip Generation*, pages 1714 to 1720.

[6] Kevin G. Hooper, P.E., Principal Editor, *Trip Generation Handbook: A Recommended Practice,* second edition (Washington DC: Institute of Transportation Engineers, June 2004, page 85.

[7] Hooper, pages 93 and 94.

[8] Kevin G. Hooper, P.E., Principal Editor, *Trip Generation Handbook: A Recommended Practice,* second edition (Washington DC: Institute of Transportation Engineers, June 2004), page 51.

[9] Hooper, page 63, for the 2:00-to-6:00-PM period.

Table 2. Calculated trip generation.

	Existing Tire Store[a]		Future Pharmacy/Drugstore with Drive-Through Window[b]			Difference		
	Total	Non-Pass-By[c]	Total	External[d]	Non-Pass-By	Total	External	Non-Pass-By
Weekday Daily								
	149	112	1,318	1,288	966	1,159	1,139	854
Weekday PM-Street-Peak Hour								
In	11	8	68	66	50	57	55	39
Out	14	11	67	65	49	53	51	35
Total	25	19	135	131	99	110	106	74
Saturday Daily								
	149[e]	112	1,318[e]	1,222	916	1,169	1,073	804
Saturday Site-Peak Hour								
In	14	11	55	51	38	41	37	24
Out	16	12	57	53	40	41	37	24
Total	30	23	112	104	78	82	67	48

[a] Based on tire store. land use 848, from ITE, *Trip Generation Manual*, pages 1611 to 1627, 6,000-sf floor area.

[b] Based on pharmacy/drugstore with drive-through window, land use 881, from ITE, *Trip Generation Manual*, pages 1801 to 1807, 13,602-sf floor area.

[c] 25-percent maximum pass-by, per state permitting practice.

[d] External trips = total trips – internal trips. Internal trips are between the bank and the proposed pharmacy. Based on Hooper, pages 93 and 94.

[e] Estimated as equal to weekday daily vehicle-trips.

The three trip types are:

- primary trips that are specifically for visiting site and are added to roads near the site
- diverted-linked trips that are attracted from traffic on roads near the site but require a diversion to access the site
- pass-by trips that are attracted from traffic passing the site on a road that provides direct site access[10]

Per state permitting practice, this TOS reflects:

[10] Hooper, page 29.

- 75-percent primary and internal trips
- no diverted-linked trips
- 25-percent pass-by trips, excluding internal trips

TRIP-GENERATION DIFFERENCES DUE TO THE PROPOSED REDEVELOPMENT

Table 2 presents calculated trip-generation differences due to the proposed redevelopment. The changes in external vehicle-trips are:

- weekday daily, 1,139 total
- weekday PM-street-peak hour, 106 (55 in and 51 out)
- Saturday daily, 1,073 total
- Saturday site-peak hour, 67 trips (37 in and 37 out)

The changes in external non-pass-by trips are:

- weekday daily, 854 total
- weekday PM-street-peak hour, 74 (39 in and 35 out)
- Saturday daily, 804 total
- Saturday site-peak hour, 48 trips (24 in and 24 out)

TRIP DISTRIBUTION AND NETWORK ASSIGNMENT

Trip distribution and network assignment of vehicle trips to and from the site considered such factors as existing travel patterns, population and regional land development.

Table 3 shows estimated trip distribution and network assignment. The percentages consider:

Table 3. Trip distribution/assignment.

Street and Direction	Percent
Massachusetts Avenue to/from the West	40
Massachusetts Avenue to/from the East	35
Connector Road to/from the North	25

- existing travel patterns
- the proximity of arterial streets and highways such as Massachusetts Avenue, Main Street and MA 2
- population distribution
- area land uses

Figure 4 shows weekday peak-hour site trips.

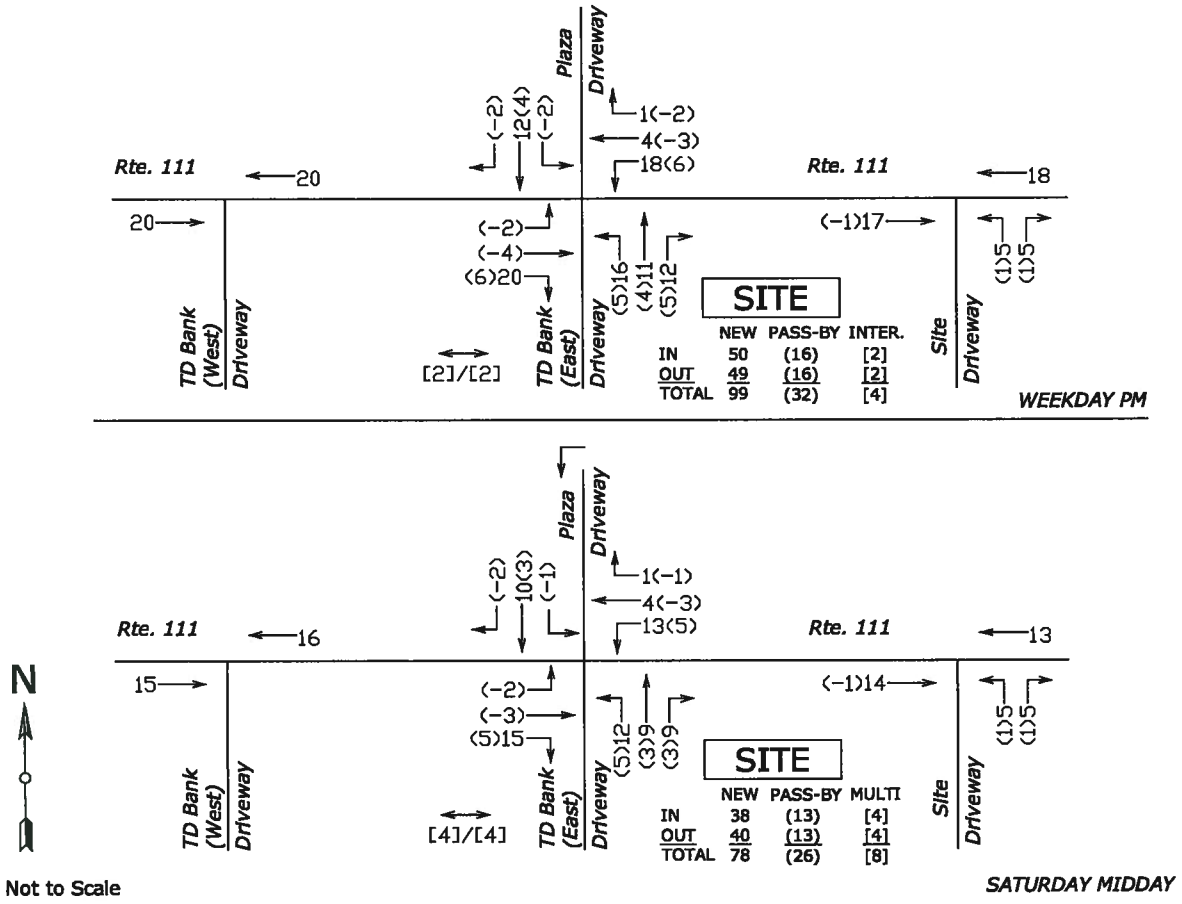

Figure 4. Peak-hour site trips.

BUILD TRAFFIC VOLUMES

Site traffic volumes were superimposed on the no-build volumes to estimate the build peak-hour volumes. Figure 5 shows the resulting 2018 build weekday peak-hour volumes.

TRAFFIC-VOLUME CHANGES

Table 4 summarizes estimated peak-hour traffic-volume changes due to the development. For:

- Massachusetts Avenue west of the connector road, the increase is 31 to 40 vehicles per hour
- Massachusetts Avenue east of the connector road, the increase is 27 to 35 vehicles per hour
- the connector road, the increase is 20 to 24 vehicles per hour

The above increases are not anticipated to be significant in terms of area traffic safety and operations.

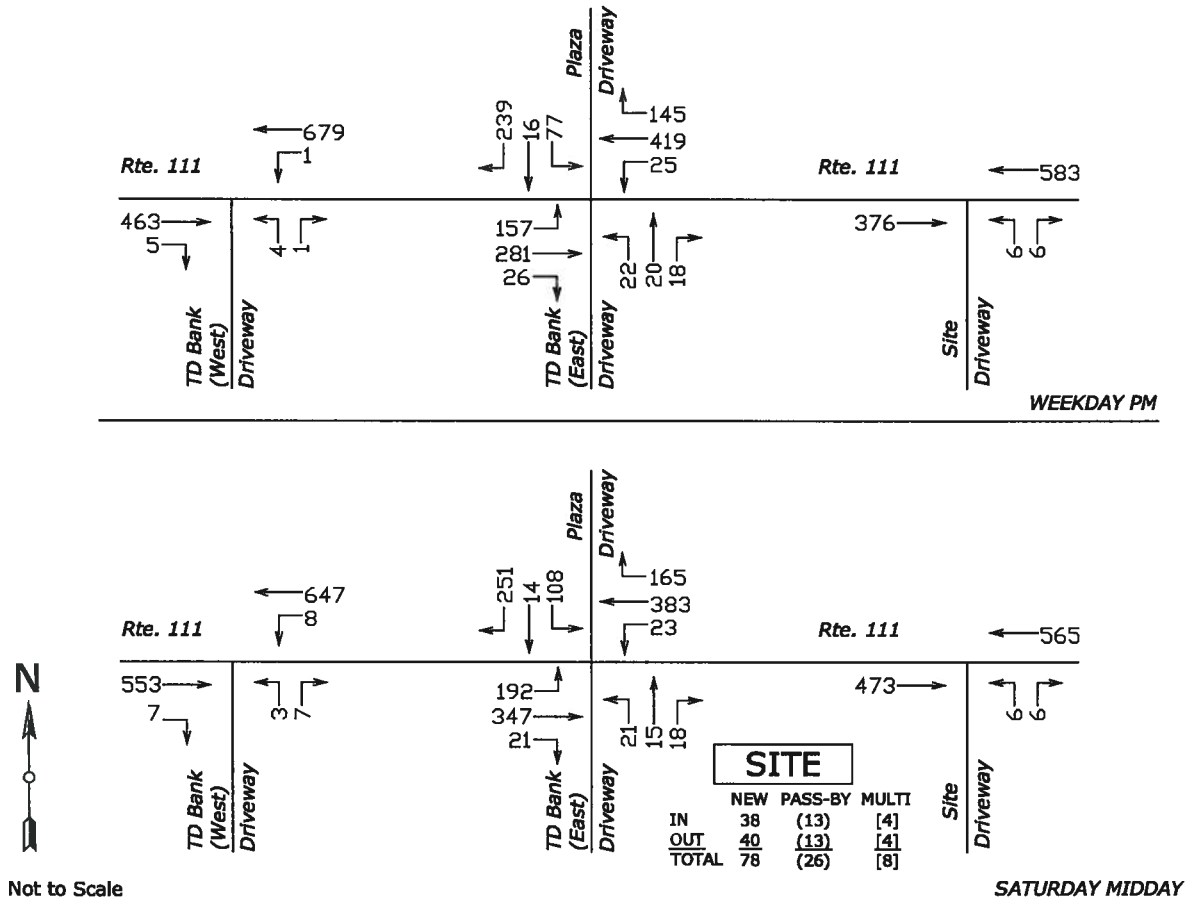

Figure 5. 2018 build peak-hour traffic volumes.

Table 4. Traffic-volume changes.

Location and Peak Hour	2018 No-Build[a]	2018 Build	Change
Massachusetts Avenue West of Connector Road			
Weekday PM	1,104	1,144	40
Saturday Midday	1,184	1,215	31
Massachusetts Avenue East of Connector Road			
Weekday PM	930	965	35
Saturday Midday	1,017	1,044	27
Connector Road North of Massachusetts Avenue			
Weekday PM	630	654	24
Saturday Midday	725	745	20

[a]Two-way volumes in vehicles per hour.

TRAFFIC-SIGNAL WARRANTS

TEPP LLC examined warrants for traffic-control signals at Massachusetts Avenue/connector road intersection. The analyses were conducted in accordance with the *Manual on Uniform Traffic Control Devices* (MUTCD).[11] The MUTCD set forth eight traffic-control signal warrants:

- Warrant 1, Eight-Hour Vehicular Volume
- Warrant 2, Four-Hour Vehicular Volume
- Warrant 3, Peak Hour
- Warrant 4, Pedestrian Volume
- Warrant 5, School Crossing
- Warrant 6, Coordinated Signal System
- Warrant 7, Crash Experience
- Warrant 8, Roadway Network
- Warrant 9, Intersection Near a Grade Crossing

Meeting a warrant does not necessarily justify signalization. Signals should generally be provided only where their advantages outweigh their disadvantages. In some cases, alternatives to signalization may be appropriate.

This TOS considered Warrant 1 (Eight-Hour Vehicular Volume), Warrant 2 (Four-Hour Vehicular Volume) and Warrant 3 (Peak Hour). As Tables 5 and 6 indicate, the 2013 existing and 2018 build conditions meet all three warrants.

[11] Federal Highway Administration, *Manual on Uniform Traffic Control Devices for Streets and Highways*, 2009 Edition (Washington, DC, 2009), pages 446 to 448, section 4C.

Table 5. Traffic-control-signal warrants for the 2013 existing condition.

	Weekday Volumes[a]		Warrants Satisfied[b]				
Hour Begins	Major Street[c]	Minor Street[d]	1A[e]	1B[f]	1A-B[g]	3[h]	4[i]
7:00 AM	502	123	-	-	-	-	-
8:00 AM	638	146	-	-	✓	-	-
9:00 AM	651	177	✓	-	✓	-	-
10:00 AM	535	191	✓	-	-	-	-
11:00 AM	578	215	✓	-	-	-	-
12:00 noon	699	232	✓	-	✓	✓	-
1:00 PM	644	248	✓	-	✓	✓	-
2:00 PM	703	284	✓	-	✓	✓	-
3:00 PM	883	299	✓	✓	✓	✓	✓
4:00 PM	825	261	✓	✓	✓	✓	-
5:00 PM	887	307	✓	✓	✓	✓	✓
6:00 PM	873	307	✓	✓	✓	✓	✓
Number of Hours Warrant Met			10	4	9	7	3
Number of Hours Required			8	8	8	4	1
Warrant Met?			✓	-	✓	✓	✓

[a]In vehicles per hour (vph).

[b]With one-lane approaches on the major street and the minor street.

[c]The major street is Massachusetts Avenue. The volume is the total of both major-street approaches, including left turns, because the Massachusetts Avenue approaches do not have existing exclusive left-turn lanes.

[d]The minor streets are the connector road and the driveway. The volume is for higher-volume minor-street approach for each hour. The connector road approach is higher volume for all hours.

[e]Warrant 1, Eight-Hour Vehicular Volume, Condition A—Minimum Vehicular Volume. Warranting volumes are 500 vph for the major street and 150 vph for the minor street.

[f]Warrant 1, Eight-Hour Vehicular Volume, Condition B—Interruption of Continuous Traffic. Warranting volumes are 750 vph for the major street and 75 vph for the minor street.

[g]Warrant 1, Combination of Conditions A and B after adequate trial of remedial measures. Warranting volumes are 80 percent of those for Conditions A and B respectively.

[h]Warrant 2, Four-Hour Vehicular Volume. Warranting volumes are per MUTCD, page 440, Figure 4C-1.

[i]Warrant 3, Warrant 3, Peak Hour. Warranting volumes are per MUTCD, page 441, Figure 4C-2.

Table 6. Traffic-control-signal warrants for the 2018 build condition.

	Weekday Volumes[a]		Warrants Satisfied[b]				
Hour Begins	Major Street[c]	Minor Street[d]	1A[e]	1B[f]	1A-B[g]	3[h]	4[i]
7:00 AM	510	143	-	-	-	-	-
8:00 AM	628	169	-	-	✓	-	-
9:00 AM	613	200	✓	-	✓	-	-
10:00 AM	488	209	-	-	-	-	-
11:00 AM	517	235	✓	-	-	-	-
12:00 noon	638	258	✓	-	✓	✓	-
1:00 PM	557	278	✓	-	-	✓	-
2:00 PM	642	312	✓	-	✓	✓	-
3:00 PM	797	330	✓	✓	✓	✓	✓
4:00 PM	756	286	✓	✓	✓	✓	-
5:00 PM	821	337	✓	✓	✓	✓	✓
6:00 PM	823	338	✓	✓	✓	✓	✓
Number of Hours Warrant Met			9	4	8	7	3
Number of Hours Required			8	8	8	4	1
Warrant Met?			✓	-	✓	✓	✓

[a]In vph.

[b]With one-lane approaches on the major street and the minor street.

[c]The major street is Massachusetts Avenue. The volume is the total of both major-street approaches, excluding left turns, because the Massachusetts Avenue approaches have proposed exclusive left-turn lanes.

[d]The minor streets are the connector road and the driveway. The volume is for higher-volume minor-street approach for each hour. The connector road approach is higher volume for all hours.

[e]Warrant 1, Eight-Hour Vehicular Volume, Condition A—Minimum Vehicular Volume. Warranting volumes are 500 vph for the major street and 150 vph for the minor street.

[f]Warrant 1, Eight-Hour Vehicular Volume, Condition B—Interruption of Continuous Traffic. Warranting volumes are 750 vph for the major street and 75 vph for the minor street.

[g]Warrant 1, Combination of Conditions A and B after adequate trial of remedial measures. Warranting volumes are 80 percent of those for Conditions A and B respectively.

[h]Warrant 2, Four-Hour Vehicular Volume. Warranting volumes are per MUTCD, page 440, Figure 4C-1.

Warrant 3, Warrant 3, Peak Hour. Warranting volumes are per MUTCD, page 441, Figure 4C-2

CAPACITY ANALYSIS

INTRODUCTION

This TOS has *quantified* existing, future-no-build and future-build traffic volumes. Capacity analysis models the *quality* of traffic operations. Comparing build conditions to the no-build conditions indicates impacts of the development on quality of traffic operations.

METHODS

Capacity analysis estimates levels of service (LOS) for transportation facilities. LOS indicates the quality of traffic operations based on delay and other measures. The six LOS are designated A to F. LOS A represents the best or highest operating conditions. LOS F is the lowest, but does not necessarily connote failure.

LOS is a function of traffic volumes. Because these volumes can vary, LOS of a transportation facility can differ by time of day, day of the week, or month. For example, a transportation facility with a low LOS during peak hours may have a high LOS during other hours.

The operational analysis methods of the Transportation Research Board (TRB)[12] models LOS for intersections based on calculated control delay per vehicle, as shown in Table 7. The operational analysis used Synchro 8 software.

Method inputs include:

- intersection geometry
- traffic control, such as YIELD sign, two-way STOP sign, all-way STOP sign, roundabout or signal (including phasing, timing and progression)
- traffic volumes
- vehicle composition, such as passenger cars and trucks

The methods are all approximate. In particular, the method for two-way STOP-sign control can be conservative, with observed delays and queuing shorter than those modeled.

[12] TRB, *Highway Capacity Manual 2010* (Washington, D.C., 2010), Chapters 18 to 21 and TRB, *Highway Capacity Manual 2000* (Washington, D.C., 2000), Chapters 16 to 17.

Table 7. Level-of-service criteria for intersections.

Level of Service	Average Control Delay (seconds/vehicle) Unsignalized	Signalized
A	≤10.0	≤10.0
B	>10.0 and ≤15.0	>10.0 and ≤20.0
C	>15.0 and ≤25.0	>20.0 and ≤35.0
D	>25.0 and ≤35.0	>35.0 and ≤55.0
E	>35.0 and ≤50.0	>55.0 and ≤80.0
F	>50	>80

From TRB, *Highway Capacity Manual 2010* (Washington, D.C., 2010), pages 18-6, 19-1, 20-3 and 21-1 and from TRB, *Highway Capacity Manual 2000* (Washington, D.C., 2000), pages 16-2and 17-2.

RESULTS

Tables 8 and 9 present results for the Massachusetts Avenue/connector road intersection for the weekday AM and Saturday midday peak hours under the following conditions:

- 2013 existing
- 2018 no-build
- 2018 build
- 2018 build signalized

Tables 8 and 9 show computed LOS, delays, volume/capacity ratios and queues. Capacity analysis worksheets that give background, explanation and additional information are in Appendix D.

Results for the weekday AM and Saturday midday peak hours, unsignalized, are:

- left turns from the Massachusetts Avenue eastbound and westbound approaches show low delays
- movements from the connector road southbound approach show delayed operations
- unsignalized, movements from the driveway northbound approach included delayed operations

Signalized, the overall intersection and each of its movements show low-to-moderate delays.

Table 8. Capacity analysis for weekday PM peak hour.

Analysis Condition and Movements	LOS[a]	Delay[b]	V/C[c]	Queue[d]
2013 Existing Unsignalized				
Massachusetts Avenue EB L	A	4.7	0.17	16
Massachusetts Avenue WB L	A	0.0	0.00	0
Connector Road SB LTR	F	90.0	1.02	297
Driveway NB LTR	D	33.8	0.08	7
2018 No-Build Unsignalized				
Massachusetts Avenue EB L	A	4.7	0.18	16
Massachusetts Avenue WB L	A	0.0	0.00	0
Connector Road SB LTR	F	116.6	1.10	338
Driveway NB LTR	E	37.1	0.09	7
2018 Build Unsignalized				
Massachusetts Avenue EB L	A	4.5	0.17	16
Massachusetts Avenue WB L	A	0.6	0.02	2
Connector Road SB LTR	F	272.3	1.48	525
Driveway NB LT	F	259.5	1.10	135
Driveway NB R	B	10.2	0.04	3
2018 Build Signalized				
Massachusetts Avenue EB L	B	11.1	0.54	54
Massachusetts Avenue EB TR	B	10.5	0.38	150
Massachusetts Avenue WB L	A	9.1	0.05	13
Massachusetts Avenue WB TR	B	18.0	0.74	314
Connector Road SB LTR	C	29.1	0.70	197+
Driveway NB LT	C	21.0	0.30	38
Driveway NB R	B	19.2	0.02	0
Overall	B	18.2	0.71	-[e]

[a]Level of service.
[b]Average delay in seconds per vehicle.
[c]Volume/capacity ratio.
[d]95th percentile queue in ft.
[e] - = not calculated or not applicable.
EB = eastbound, WB = westbound, NB = northbound, SB = southbound, L = left, T = through, R = right.

Table 9. Capacity analysis for Saturday midday peak hour.

Analysis Condition and Movements	LOS[a]	Delay[b]	V/C[c]	Queue[c]
2013 Existing Unsignalized				
Massachusetts Avenue EB L	A	5.3	0.22	21
Massachusetts Avenue WB L	A	0.1	0.00	0
Connector Road SB LTR	F	313.6	1.58	616
Driveway NB LTR	F	52.6	0.21	18
2018 No-Build Unsignalized				
Massachusetts Avenue EB L	A	5.3	0.23	22
Massachusetts Avenue WB L	A	0.1	0.00	0
Connector Road SB LTR	F	406.5	1.78	690
Driveway NB LTR	F	64.4	0.25	22
2018 Build Unsignalized				
Massachusetts Avenue EB L	A	5.2	0.23	22
Massachusetts Avenue WB L	A	0.6	0.02	2
Connector Road SB LTR	F	617.4	2.24	834
Driveway NB LT	F	323.3	1.05	100
Driveway NB R	B	10.8	0.03	2
2018 Build Signalized				
Massachusetts Avenue EB L	B	13.7	0.62	81
Massachusetts Avenue EB TR	B	12.2	0.47	195
Massachusetts Avenue WB L	B	12.1	0.06	13
Massachusetts Avenue WB TR	C	24.9	0.80	398+
Connector Road SB LTR	D	46.4	0.87	264+
Driveway NB LT	C	21.5	0.14	36
Driveway NB R	C	20.7	0.01	0
Overall	C	25.1	0.80	-[e]

[a]Level of service.
[b]Average delay in seconds per vehicle.
[c]Volume/capacity ratio.
[d]95th percentile queue in ft.
[e] - = not calculated or not applicable.
EB = eastbound, WB = westbound, SB = southbound, NB = northbound, L = left, T = through, R = right.

CONCLUSIONS

This TOS analyzes traffic operations at the Massachusetts Avenue/connector road intersection under the following conditions:

- 2013 existing
- 2018 no-build (with background traffic growth and without the proposed redevelopment)
- 2018 build (with background traffic growth, with the proposed redevelopment and with intersection signalization)
- 2018 build signalized

This TOS concludes that:

- the Massachusetts Avenue/connector road intersection meets traffic-control-signal warrants under the 2013 existing and 2018 build conditions
- capacity analysis for the weekday PM and Saturday midday peak hours indicates that the potential intersection geometry and signalization provides for appropriate levels of service
- Shops at Kelly's Corner, LLC reports that consultations with Town staff indicate support for signalization

APPENDIX

Appendix A: Site Plan

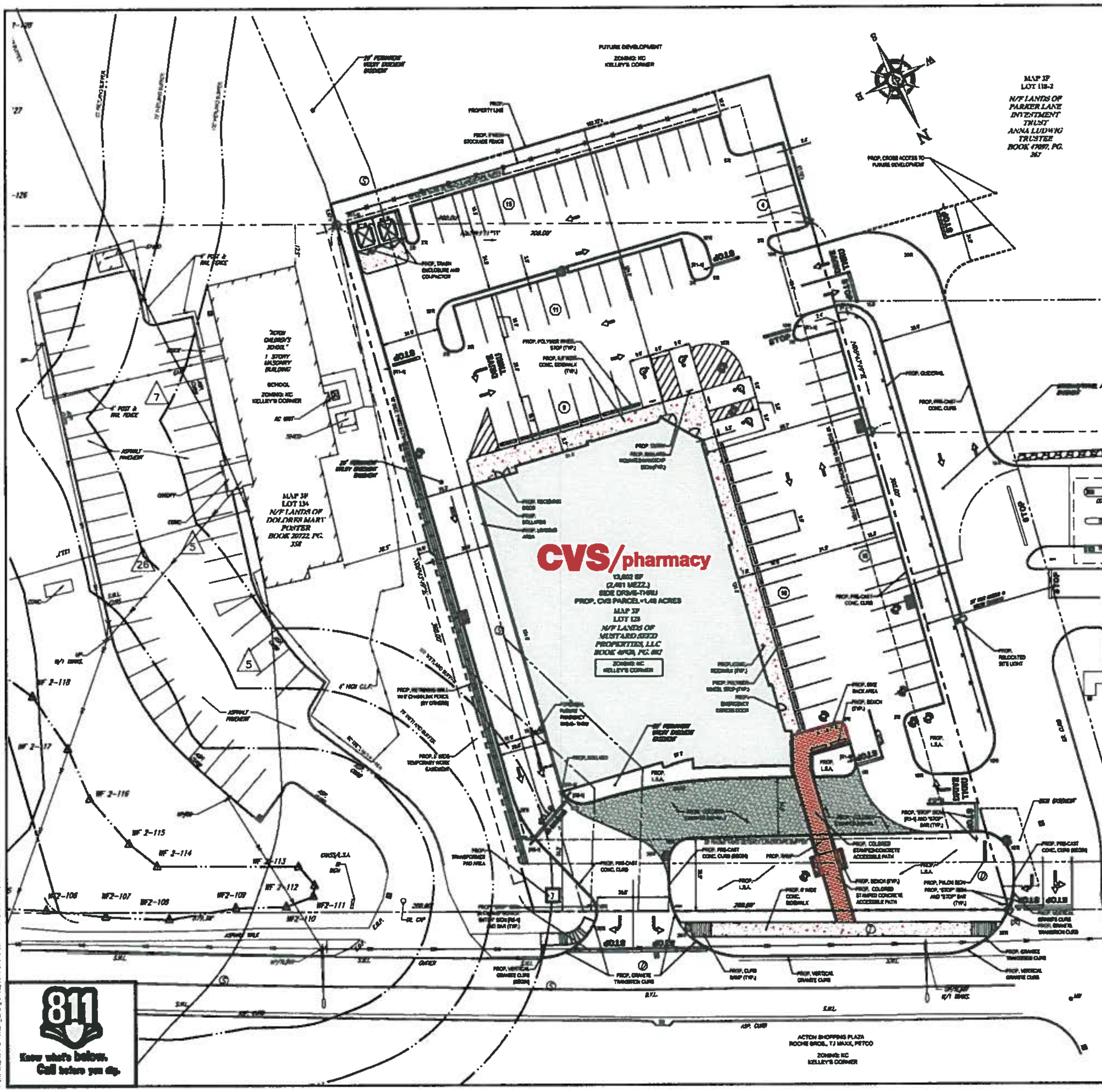

LAND USE / ZONING INFORMATION & NOTES

1. APPLICANT: TRB DEVELOPMENT GROUP, INC., 36 LONDONDERRY TURNPIKE, HOOKSETT, NH 03106
2. OWNER: MUSTARD SEED PROPERTIES, LLC
3. PARCEL DATA: LOT IS SHOWN AS LOTS 113, 117, 116, 116-1, 116-2, 121, 121-1, 121-2, 127, 128 & 124 ON THE TOWN OF ACTON ASSESSOR'S MAP 37.

ZONING ANALYSIS TABLE

ZONING CRITERIA	ZONE: KELLEY'S CORNER DISTRICT (KC) RETAIL USES ALLOWED BY RIGHT — REQUIRED	EXISTING *	PROPOSED
MIN. LOT AREA	10,000 SF	57,577 SF	54,757 SF
MIN. LOT FRONTAGE	100 FT	200 FT	NO CHANGE
MIN. FRONT SETBACK	30 FT	59.4 FT	55.3 FT (BUILDING)
MIN. SIDE SETBACK	NONE	30.9 FT	26.3 FT (BUILDING)
MIN. REAR SETBACK	NONE	61.7 FT	104.8 FT (BUILDING)
MIN. FRONT PARKING SETBACK	30 FT	17 FT	30.0 FT
MIN. SIDE PARKING SETBACK	10 FT	32.2 FT	2.4 FT **
MIN. REAR PARKING SETBACK	10 FT	40.3 FT	10.6 FT
IMPERVIOUS LOT COVERAGE	N/A	25,512 SF (44%)	54,000 SF (85.4%)
MAX. F.A.R.	0.4	0.12	0.21
MIN. INTERNAL LANDSCAPING	10%	NONE **	1,429 SF (6.7%) **
MAX. BUILDING HEIGHT	30 FT	<36 FT	<36 FT
PARKING SPACES	46	UNKNOWN	73
PARKING CRITERIA	REQUIRED: 1 SPACE PER 300 SF NET FLOOR AREA 13,[illegible] SF NFA / 300 = 46 SPACES REQUIRED		
ACCESSIBLE PARKING SPACES	4	1	4
ACCESSIBLE PARKING CRITERIA	REQUIRED: 76-100 SPACES = 4 ACCESSIBLE SPACES		

* BASED ON EXISTING LOT (MAP 37, LOT 128)
** DOES NOT CONFORM TO ZONING

REFER TO GENERAL NOTES SHEET FOR NOTES

THIS PLAN TO BE UTILIZED FOR SITE LAYOUT PURPOSES ONLY

CVS pharmacy

RELO

STORE NUMBER: 706

400 MASSACHUSETTS AVENUE
ACTON, MA

PROJECT TYPE: RELO
DEAL TYPE: TK

CS PROJECT NUMBER: 65315

ARCHITECT OF RECORD:
BKA Architects, Inc.
Architecture + Interiors
142 Crescent Street
Brockton, MA 02302

CIVIL CONSULTANT:
BOHLER ENGINEERING
352 TURNPIKE ROAD
SOUTHBOROUGH, MA 01772
www.BohlerEngineering.com

DEVELOPER:
TRB DEVELOPMENT GROUP, INC.
36 LONDONDERRY TURNPIKE
HOOKSETT, NH 03106
TEL: 603-669-8500

W.D. GOEBEL
PROFESSIONAL ENGINEER

REVISIONS			
REV:	DATE:	COMMENT:	BY:

CHECKED BY: JGS
DRAWN BY: KBS
DATE: 01/25/13
JOB NUMBER: W121033
TITLE: PRELIMINARY SITE PLAN
SHEET NUMBER: 4
COMMENTS: NOT FOR CONSTRUCTION

Appendix B: Traffic Counts

Accurate Counts
978-664-2565

N/S Street : Acton Plaza / TD Bank Dwy
E/W Street : Route 111
City/State : Acton, MA
Weather : Clear

File Name : 11810001
Site Code : 11810001
Start Date : 10/17/2012
Page No : 1

Groups Printed- Cars - Trucks

	Acton Plaza From North			Rte 111 From East			TD Bank Drwy From South			Rte111 From West			
Start Time	Left	Thru	Right	Left	Thru	Right	Left	Thru	Right	Left	Thru	Right	Int. Total
07:00 AM	7	0	13	0	47	20	0	0	1	11	53	0	152
07:15 AM	10	0	21	0	74	13	0	0	0	6	37	0	161
07:30 AM	7	0	23	0	60	11	0	0	0	8	60	0	169
07:45 AM	15	1	29	0	51	16	0	0	0	10	48	0	170
Total	39	1	86	0	232	60	0	0	1	35	198	0	652
08:00 AM	19	0	9	0	66	22	0	0	0	17	82	0	215
08:15 AM	19	0	20	0	54	16	0	0	0	12	56	0	177
08:30 AM	26	0	23	0	65	25	0	0	0	19	67	0	225
08:45 AM	15	0	20	0	59	22	0	0	0	15	73	0	204
Total	79	0	72	0	244	85	0	0	0	63	278	0	821
09:00 AM	18	1	20	0	68	21	0	0	0	15	56	0	199
09:15 AM	20	0	29	0	79	24	0	1	0	23	69	0	245
09:30 AM	20	0	21	0	40	25	0	0	0	29	71	0	206
09:45 AM	32	0	23	1	66	23	1	0	0	23	59	0	228
Total	90	1	93	1	253	93	1	1	0	90	255	0	878
10:00 AM	26	0	21	0	63	29	1	0	0	25	47	0	212
10:15 AM	13	0	29	0	34	21	2	1	0	17	50	0	167
10:30 AM	20	0	27	0	36	18	0	0	1	22	44	0	168
10:45 AM	8	0	46	0	44	24	1	0	1	26	57	1	208
Total	67	0	123	0	177	92	4	1	2	90	198	1	755
11:00 AM	15	1	31	0	48	23	0	2	0	19	46	0	185
11:15 AM	15	0	28	0	49	24	0	0	0	29	50	0	195
11:30 AM	14	1	40	1	49	30	0	1	1	31	45	0	213
11:45 AM	15	0	54	0	50	32	1	1	1	27	52	0	233
Total	59	2	153	1	196	109	1	4	2	106	193	0	826
12:00 PM	24	0	32	1	63	29	1	0	0	32	45	0	227
12:15 PM	23	0	38	1	61	36	0	0	0	30	52	0	241
12:30 PM	20	0	36	0	59	39	0	0	1	33	63	0	251
12:45 PM	28	0	37	0	74	36	0	0	0	26	59	0	260
Total	95	0	143	2	257	140	1	0	1	121	219	0	979
01:00 PM	23	0	44	0	56	21	0	0	0	33	55	0	232
01:15 PM	18	0	60	0	42	29	0	0	0	37	49	0	235
01:30 PM	14	0	47	0	66	36	0	1	0	23	41	0	228
01:45 PM	16	1	32	0	50	30	0	0	0	55	55	0	239
Total	71	1	183	0	214	116	0	1	0	148	200	0	934
02:00 PM	26	0	50	1	88	38	0	0	0	33	43	0	279
02:15 PM	16	0	44	1	47	26	1	1	0	29	50	0	215
02:30 PM	23	0	53	0	60	39	0	1	1	29	64	0	270
02:45 PM	24	0	50	0	72	30	1	0	0	36	66	0	279
Total	89	0	197	2	267	133	2	2	1	127	223	0	1043
03:00 PM	18	0	70	0	82	31	0	1	0	43	73	0	318
03:15 PM	25	0	47	1	88	47	0	0	0	32	55	0	295
03:30 PM	14	0	55	0	93	33	0	1	0	38	70	0	304
03:45 PM	16	0	60	1	101	31	2	0	0	53	67	0	331
Total	73	0	232	2	364	142	2	2	0	166	265	0	1248
04:00 PM	19	0	42	0	85	25	0	2	0	38	62	0	273
04:15 PM	20	0	50	0	90	39	1	3	0	40	67	0	310
04:30 PM	17	0	54	1	71	28	2	0	0	31	59	0	263
04:45 PM	11	0	46	0	85	36	1	0	0	38	60	0	277
Total	67	0	192	1	331	128	4	5	0	147	248	0	1123
05:00 PM	15	0	69	1	91	38	1	1	0	32	63	0	311
05:15 PM	19	0	52	0	91	24	0	3	0	35	76	0	300
05:30 PM	24	0	58	0	98	38	0	0	0	31	59	0	308
05:45 PM	20	0	52	0	99	23	0	2	0	52	66	0	314
Total	78	0	231	1	379	123	1	6	0	150	264	0	1233

Accurate Counts
978-664-2565

N/S Street : Acton Plaza / TD Bank Dwy
E/W Street : Route 111
City/State : Acton, MA
Weather : Clear

File Name : 11810001
Site Code : 11810001
Start Date : 10/17/2012
Page No : 2

Groups Printed- Cars - Trucks

	Acton Plaza From North			Rte 111 From East			TD Bank Drwy From South			Rte111 From West			
Start Time	Left	Thru	Right	Left	Thru	Right	Left	Thru	Right	Left	Thru	Right	Int. Total
06:00 PM	20	0	67	1	99	41	0	2	1	45	65	0	341
06:15 PM	15	0	64	0	88	44	1	1	0	31	69	0	313
06:30 PM	15	0	54	0	93	35	0	0	0	30	65	0	292
06:45 PM	17	0	56	0	83	27	1	1	0	26	59	0	270
Total	67	0	241	1	363	147	2	4	1	132	258	0	1216
Grand Total	874	5	1946	11	3277	1368	18	26	8	1375	2799	1	11708
Apprch %	30.9	0.2	68.9	0.2	70.4	29.4	34.6	50	15.4	32.9	67	0	
Total %	7.5	0	16.6	0.1	28	11.7	0.2	0.2	0.1	11.7	23.9	0	
Cars	867	5	1940	11	3161	1356	18	26	8	1367	2743	1	11503
% Cars	99.2	100	99.7	100	96.5	99.1	100	100	100	99.4	98	100	98.2
Trucks	7	0	6	0	116	12	0	0	0	8	56	0	205
% Trucks	0.8	0	0.3	0	3.5	0.9	0	0	0	0.6	2	0	1.8

	Acton Plaza From North				Rte 111 From East				TD Bank Drwy From South				Rte111 From West				
Start Time	Left	Thru	Right	App. Total	Left	Thru	Right	App. Total	Left	Thru	Right	App. Total	Left	Thru	Right	App. Total	Int. Total
Peak Hour Analysis From 07:00 AM to 09:45 AM - Peak 1 of 1																	
Peak Hour for Entire Intersection Begins at 09:00 AM																	
09:00 AM	18	1	20	39	0	68	21	89	0	0	0	0	15	56	0	71	199
09:15 AM	20	0	29	49	0	79	24	103	0	1	0	1	23	69	0	92	245
09:30 AM	20	0	21	41	0	40	25	65	0	0	0	0	29	71	0	100	206
09:45 AM	32	0	23	55	1	66	23	90	1	0	0	1	23	59	0	82	228
Total Volume	90	1	93	184	1	253	93	347	1	1	0	2	90	255	0	345	878
% App. Total	48.9	0.5	50.5		0.3	72.9	26.8		50	50	0		26.1	73.9	0		
PHF	.703	.250	.802	.836	.250	.801	.930	.842	.250	.250	.000	.500	.776	.898	.000	.863	.896
Cars	88	1	91	180	1	235	91	327	1	1	0	2	88	253	0	341	850
% Cars	97.8	100	97.8	97.8	100	92.9	97.8	94.2	100	100	0	100	97.8	99.2	0	98.8	96.8
Trucks	2	0	2	4	0	18	2	20	0	0	0	0	2	2	0	4	28
% Trucks	2.2	0	2.2	2.2	0	7.1	2.2	5.8	0	0	0	0	2.2	0.8	0	1.2	3.2

Accurate Counts
978-664-2565

N/S Street : Acton Plaza / TD Bank Dwy
E/W Street : Route 111
City/State : Acton, MA
Weather : Clear

File Name : 11810001
Site Code : 11810001
Start Date : 10/17/2012
Page No : 3

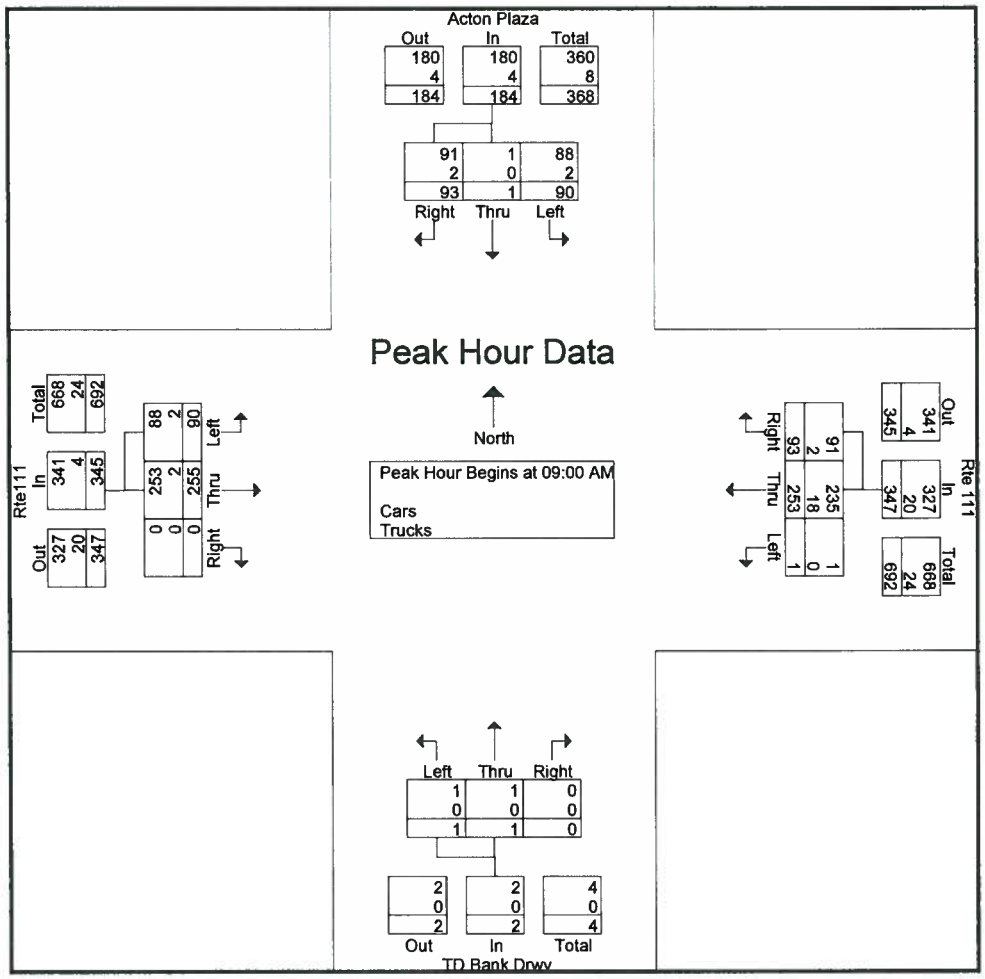

Peak Hour Analysis From 07:00 AM to 09:45 AM - Peak 1 of 1

Peak Hour for Each Approach Begins at:

	09:00 AM				08:30 AM				09:00 AM				08:45 AM			
+0 mins.	18	**1**	20	39	0	65	**25**	90	0	0	0	0	15	**73**	0	88
+15 mins.	20	0	**29**	49	0	59	22	81	0	**1**	0	**1**	15	56	0	71
+30 mins.	20	0	21	41	0	68	21	89	0	0	0	0	23	69	0	92
+45 mins.	**32**	0	23	**55**	0	**79**	24	**103**	**1**	0	0	1	**29**	71	0	**100**
Total Volume	90	1	93	184	0	271	92	363	1	1	0	2	82	269	0	351
% App. Total	48.9	0.5	50.5		0	74.7	25.3		50	50	0		23.4	76.6	0	
PHF	.703	.250	.802	.836	.000	.858	.920	.881	.250	.250	.000	.500	.707	.921	.000	.878
Cars	88	1	91	180	0	254	88	342	1	1	0	2	82	265	0	347
% Cars	97.8	100	97.8	97.8	0	93.7	95.7	94.2	100	100	0	100	100	98.5	0	98.9
Trucks	2	0	2	4	0	17	4	21	0	0	0	0	0	4	0	4
% Trucks	2.2	0	2.2	2.2	0	6.3	4.3	5.8	0	0	0	0	0	1.5	0	1.1

Accurate Counts
978-664-2565

N/S Street : Acton Plaza / TD Bank Dwy
/W Street : Route 111
ity/State : Acton, MA
Veather : Clear

File Name : 11810001
Site Code : 11810001
Start Date : 10/17/2012
Page No : 4

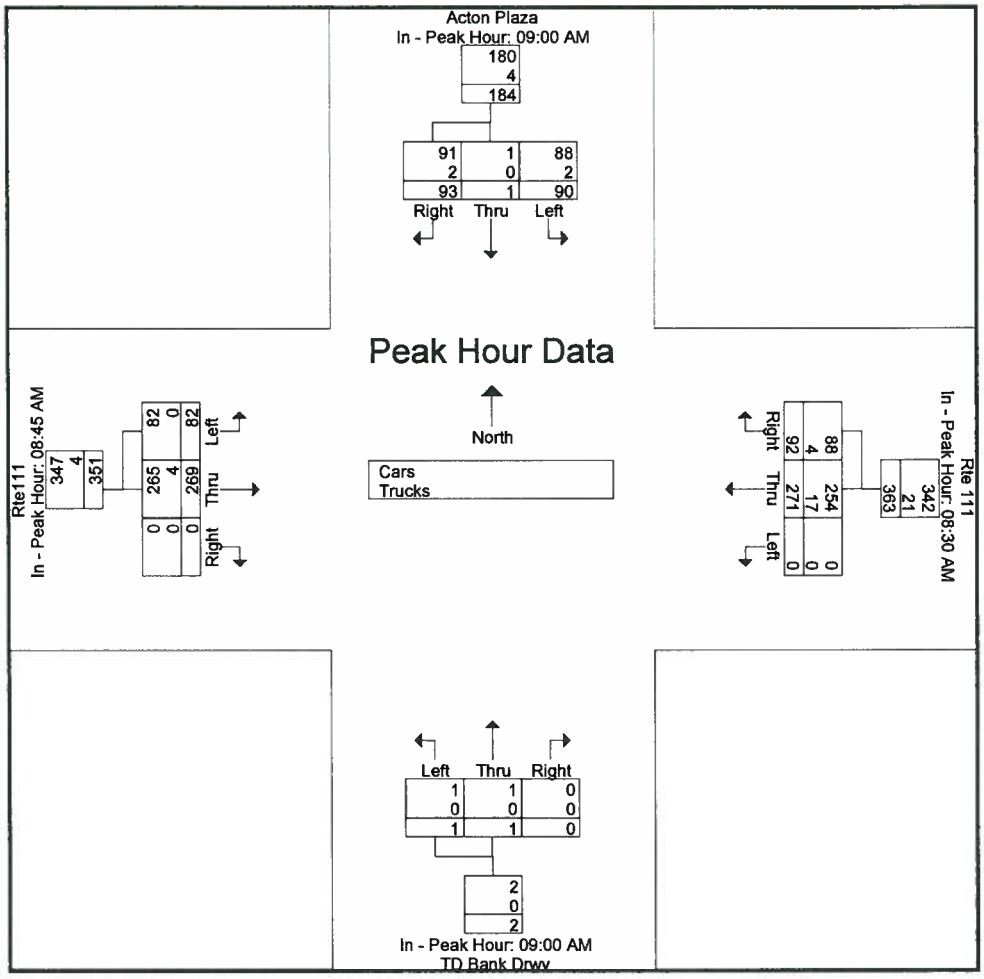

Peak Hour Analysis From 10:00 AM to 01:45 PM - Peak 1 of 1
Peak Hour for Entire Intersection Begins at 12:15 PM

12:15 PM	23	0	38	61	**1**	61	36	98	0	0	0	0	30	52	0	82	241
12:30 PM	20	0	36	56	0	59	**39**	98	0	0	**1**	**1**	**33**	**63**	0	**96**	251
12:45 PM	**28**	0	37	65	0	**74**	36	**110**	0	0	0	0	26	59	0	85	**260**
01:00 PM	23	0	**44**	**67**	0	56	21	77	0	0	0	0	33	55	0	88	232
Total Volume	94	0	155	249	1	250	132	383	0	0	1	1	122	229	0	351	984
% App. Total	37.8	0	62.2		0.3	65.3	34.5		0	0	100		34.8	65.2	0		
PHF	.839	.000	.881	.929	.250	.845	.846	.870	.000	.000	.250	.250	.924	.909	.000	.914	.946
Cars	92	0	154	246	1	238	131	370	0	0	1	1	122	217	0	339	956
% Cars	97.9	0	99.4	98.8	100	95.2	99.2	96.6	0	0	100	100	100	94.8	0	96.6	97.2
Trucks	2	0	1	3	0	12	1	13	0	0	0	0	0	12	0	12	28
% Trucks	2.1	0	0.6	1.2	0	4.8	0.8	3.4	0	0	0	0	0	5.2	0	3.4	2.8

Accurate Counts
978-664-2565

N/S Street : Acton Plaza / TD Bank Dwy
E/W Street : Route 111
City/State : Acton, MA
Weather : Clear

File Name : 11810001
Site Code : 11810001
Start Date : 10/17/2012
Page No : 5

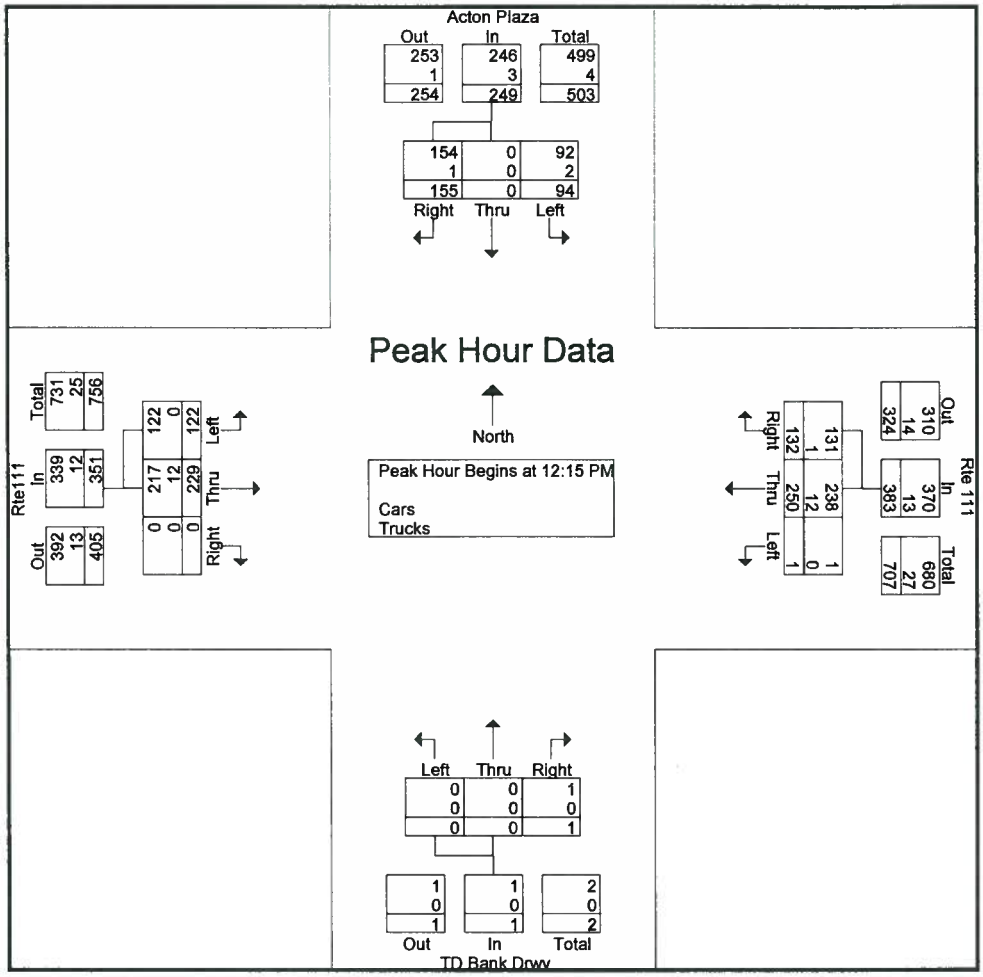

Peak Hour Analysis From 10:00 AM to 01:45 PM - Peak 1 of 1
Peak Hour for Each Approach Begins at:

	12:45 PM				12:00 PM				10:15 AM				12:30 PM			
+0 mins.	**28**	0	37	65	**1**	63	29	93	**2**	1	0	**3**	33	**63**	0	**96**
+15 mins.	23	0	**44**	67	1	61	36	98	0	0	**1**	1	26	59	0	85
+30 mins.	18	0	**60**	**78**	0	59	**39**	98	1	0	1	2	33	55	0	88
+45 mins.	14	0	47	61	0	**74**	36	**110**	0	**2**	0	2	**37**	49	0	86
Total Volume	83	0	188	271	2	257	140	399	3	3	2	8	129	226	0	355
% App. Total	30.6	0	69.4		0.5	64.4	35.1		37.5	37.5	25		36.3	63.7	0	
PHF	.741	.000	.783	.869	.500	.868	.897	.907	.375	.375	.500	.667	.872	.897	.000	.924
Cars	82	0	188	270	2	244	139	385	3	3	2	8	129	216	0	345
% Cars	98.8	0	100	99.6	100	94.9	99.3	96.5	100	100	100	100	100	95.6	0	97.2
Trucks	1	0	0	1	0	13	1	14	0	0	0	0	0	10	0	10
% Trucks	1.2	0	0	0.4	0	5.1	0.7	3.5	0	0	0	0	0	4.4	0	2.8

Accurate Counts
978-664-2565

N/S Street : Acton Plaza / TD Bank Dwy
E/W Street : Route 111
City/State : Acton, MA
Weather : Clear

File Name : 11810001
Site Code : 11810001
Start Date : 10/17/2012
Page No : 6

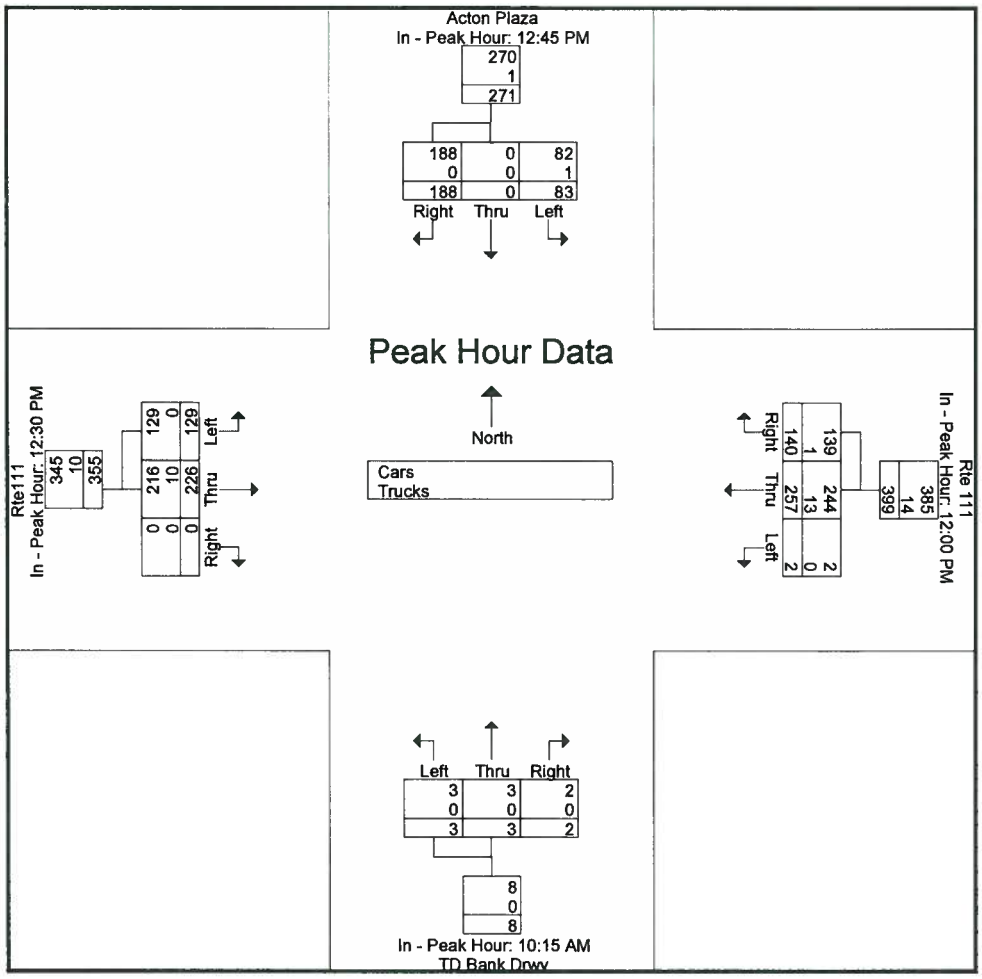

Peak Hour Analysis From 02:00 PM to 06:45 PM - Peak 1 of 1
Peak Hour for Entire Intersection Begins at 05:30 PM

05:30 PM	**24**	0	58	82	0	98	38	136	0	0	0	0	31	59	0	90	308
05:45 PM	20	0	52	72	0	**99**	23	122	0	**2**	0	2	**52**	66	0	**118**	314
06:00 PM	20	0	**67**	**87**	**1**	99	41	**141**	0	2	**1**	**3**	45	65	0	110	**341**
06:15 PM	15	0	64	79	0	88	**44**	132	**1**	1	0	2	31	**69**	0	100	313
Total Volume	79	0	241	320	1	384	146	531	1	5	1	7	159	259	0	418	1276
% App. Total	24.7	0	75.3		0.2	72.3	27.5		14.3	71.4	14.3		38	62	0		
PHF	.823	.000	.899	.920	.250	.970	.830	.941	.250	.625	.250	.583	.764	.938	.000	.886	.935
Cars	79	0	241	320	1	379	146	526	1	5	1	7	159	255	0	414	1267
% Cars	100	0	100	100	100	98.7	100	99.1	100	100	100	100	100	98.5	0	99.0	99.3
Trucks	0	0	0	0	0	5	0	5	0	0	0	0	0	4	0	4	9
% Trucks	0	0	0	0	0	1.3	0	0.9	0	0	0	0	0	1.5	0	1.0	0.7

Accurate Counts
978-664-2565

N/S Street : Acton Plaza / TD Bank Dwy
E/W Street : Route 111
City/State : Acton, MA
Weather : Clear

File Name : 11810001
Site Code : 11810001
Start Date : 10/17/2012
Page No : 7

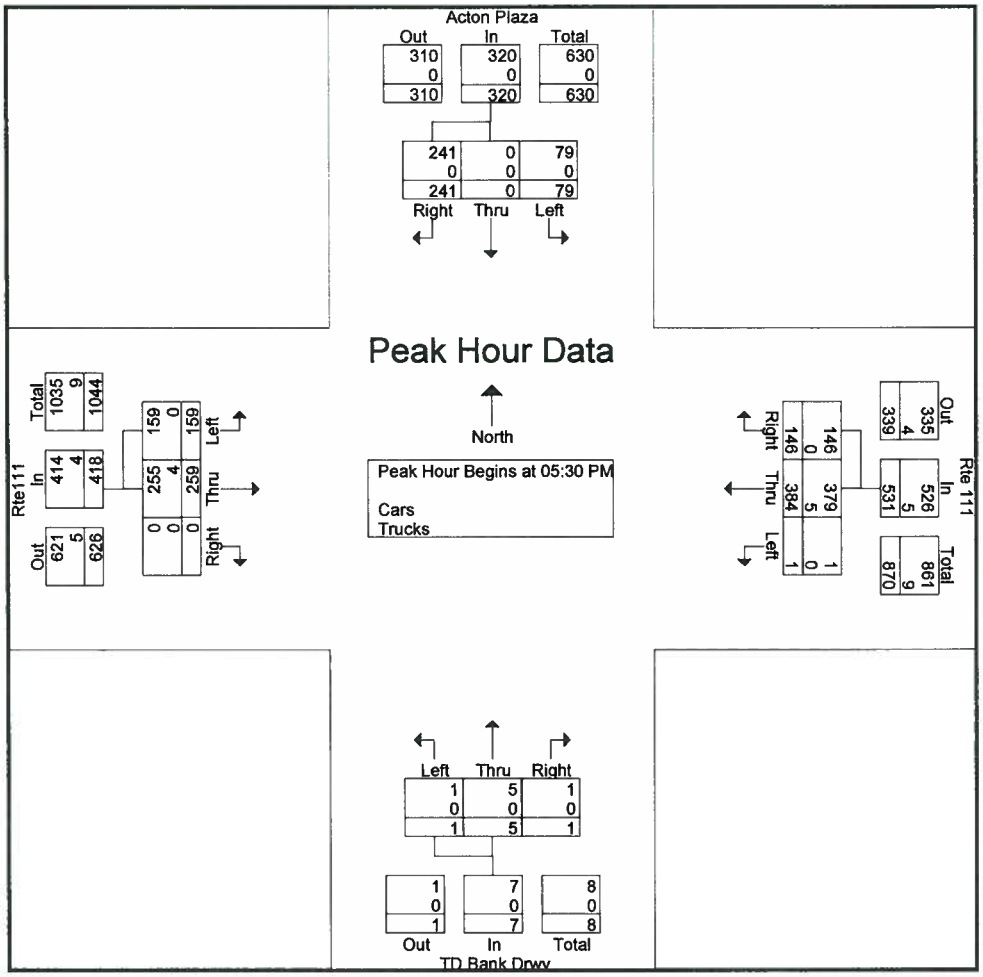

Peak Hour Analysis From 02:00 PM to 06:45 PM - Peak 1 of 1
Peak Hour for Each Approach Begins at:

	05:30 PM				05:30 PM				03:45 PM				03:30 PM			
+0 mins.	**24**	0	58	82	0	98	38	136	**2**	0	0	2	38	**70**	0	108
+15 mins.	20	0	52	72	0	**99**	23	122	0	2	0	2	**53**	67	0	**120**
+30 mins.	20	0	**67**	**87**	**1**	99	41	**141**	1	**3**	0	**4**	38	62	0	100
+45 mins.	15	0	64	79	0	88	**44**	132	2	0	0	2	40	67	0	107
Total Volume	79	0	241	320	1	384	146	531	5	5	0	10	169	266	0	435
% App. Total	24.7	0	75.3		0.2	72.3	27.5		50	50	0		38.9	61.1	0	
PHF	.823	.000	.899	.920	.250	.970	.830	.941	.625	.417	.000	.625	.797	.950	.000	.906
Cars	79	0	241	320	1	379	146	526	5	5	0	10	169	262	0	431
% Cars	100	0	100	100	100	98.7	100	99.1	100	100	0	100	100	98.5	0	99.1
Trucks	0	0	0	0	0	5	0	5	0	0	0	0	0	4	0	4
% Trucks	0	0	0	0	0	1.3	0	0.9	0	0	0	0	0	1.5	0	0.9

Accurate Counts
978-664-2565

N/S Street : Acton Plaza / TD Bank Dwy
E/W Street : Route 111
City/State : Acton, MA
Weather : Clear

File Name : 11810001
Site Code : 11810001
Start Date : 10/17/2012
Page No : 8

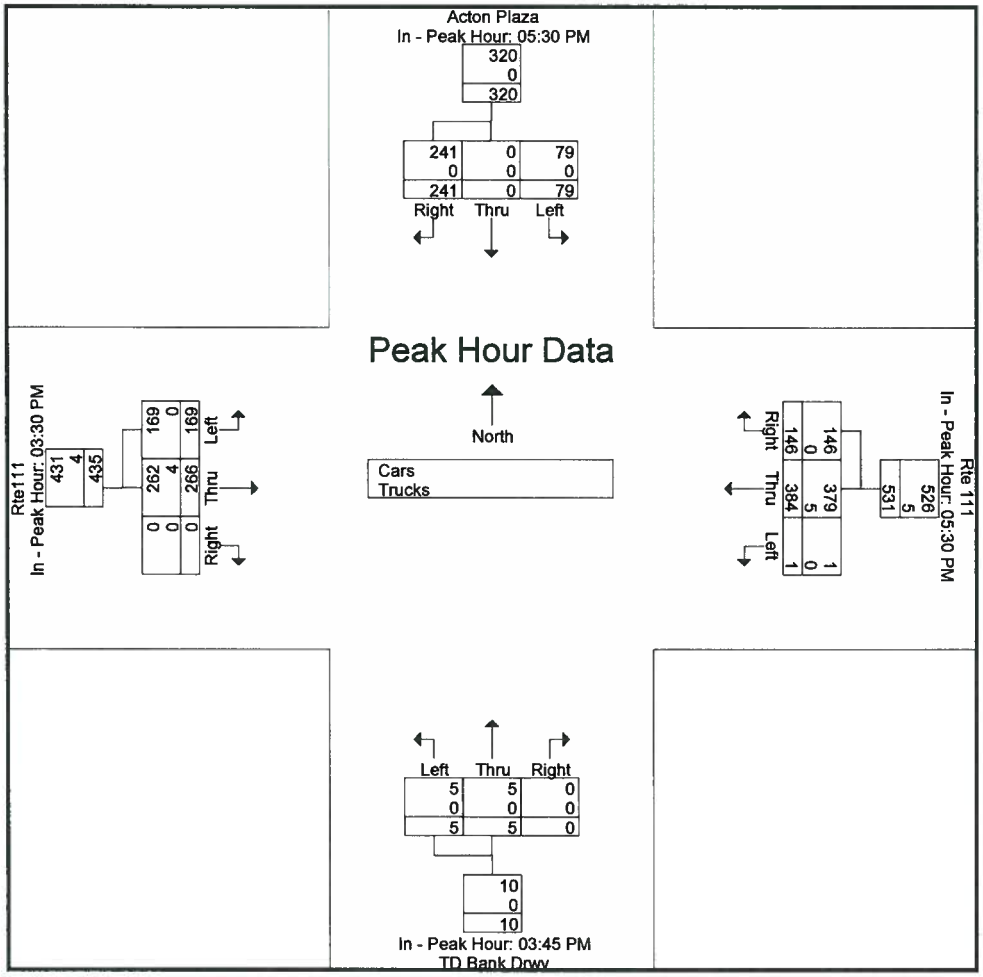

Accurate Counts
978-664-2565

N/S Street : Acton Plaza / TD Bank Dwy
E/W Street : Route 111
City/State : Acton, MA
Weather : Clear

File Name : 11810001
Site Code : 11810001
Start Date : 10/17/2012
Page No : 1

Groups Printed- Bikes Peds

	Acton Plaza From North				Rte 111 From East				TD Bank Drwy From South				Rte111 From West						
Start Time	Left	Thru	Right	Peds	Left	Thru	Right	Peds	Left	Thru	Right	Peds	Left	Thru	Right	Peds	Exclu. Total	Inclu. Total	Int. Total
07:00 AM	0	0	0	0	0	0	0	0	0	0	0	0	0	0	0	0	0	0	0
07:15 AM	0	0	0	0	0	0	0	0	0	0	0	0	0	0	0	0	0	0	0
07:30 AM	0	0	0	0	0	0	0	0	0	0	0	0	0	0	0	0	0	0	0
07:45 AM	0	0	0	0	0	0	0	0	0	0	0	0	0	0	0	0	0	0	0
Total	0	0	0	0	0	0	0	0	0	0	0	0	0	0	0	0	0	0	0
08:00 AM	0	0	0	0	0	0	0	0	0	0	0	0	0	0	0	0	0	0	0
08:15 AM	0	0	0	0	0	0	0	0	0	0	0	0	0	0	0	0	0	0	0
08:30 AM	0	0	0	0	0	0	0	0	0	0	0	0	0	0	0	0	0	0	0
08:45 AM	0	0	0	0	0	0	0	0	0	0	0	0	0	0	0	0	0	0	0
Total	0	0	0	0	0	0	0	0	0	0	0	0	0	0	0	0	0	0	0
09:00 AM	0	0	0	0	0	0	0	0	0	0	0	0	0	0	0	0	0	0	0
09:15 AM	0	0	0	0	0	0	0	0	0	0	0	0	0	0	0	0	0	0	0
09:30 AM	0	0	0	0	0	0	0	0	0	0	0	0	0	0	0	0	0	0	0
09:45 AM	0	0	0	0	0	0	0	0	0	0	0	0	0	0	0	0	0	0	0
Total	0	0	0	0	0	0	0	0	0	0	0	0	0	0	0	0	0	0	0
10:00 AM	0	0	0	0	0	0	0	0	0	0	0	0	0	1	0	0	0	1	1
10:15 AM	0	0	0	0	0	0	0	0	0	0	0	0	0	0	0	1	1	0	1
10:30 AM	0	0	0	0	0	0	0	2	0	0	0	1	0	0	0	0	3	0	3
10:45 AM	0	0	0	0	0	0	0	0	0	0	0	1	0	0	0	0	1	0	1
Total	0	0	0	0	0	0	0	2	0	0	0	2	0	1	0	1	5	1	6
11:00 AM	0	0	0	0	0	0	0	0	0	0	0	0	0	0	0	0	0	0	0
11:15 AM	0	0	0	0	0	0	0	0	0	0	0	0	0	0	0	0	0	0	0
11:30 AM	0	0	0	0	0	0	0	0	0	0	0	0	0	0	0	0	0	0	0
11:45 AM	0	0	0	0	0	0	0	0	0	0	0	0	0	0	0	0	0	0	0
Total	0	0	0	0	0	0	0	0	0	0	0	0	0	0	0	0	0	0	0
12:00 PM	0	0	0	0	0	0	0	0	0	0	0	0	0	0	0	0	0	0	0
12:15 PM	0	0	0	0	0	0	0	0	0	0	0	0	0	0	0	1	1	0	1
12:30 PM	0	0	0	0	0	0	0	0	0	0	0	0	0	0	0	0	0	0	0
12:45 PM	0	0	0	0	0	0	0	0	0	0	0	0	0	0	0	0	0	0	0
Total	0	0	0	0	0	0	0	0	0	0	0	0	0	0	0	1	1	0	1
01:00 PM	0	0	0	0	0	0	0	0	0	0	0	0	0	0	0	0	0	0	0
01:15 PM	0	0	0	0	0	0	0	0	0	0	0	1	0	0	0	0	1	0	1
01:30 PM	0	0	0	0	0	0	0	0	0	0	0	0	0	0	0	0	0	0	0
01:45 PM	0	0	0	0	0	0	0	0	0	0	0	0	0	0	0	0	0	0	0
Total	0	0	0	0	0	0	0	0	0	0	0	1	0	0	0	0	1	0	1
02:00 PM	0	0	0	0	0	0	0	0	0	0	0	0	0	0	0	0	0	0	0
02:15 PM	0	0	0	0	0	0	0	0	0	0	0	0	0	0	0	0	0	0	0
02:30 PM	0	0	0	0	0	0	0	0	0	0	0	0	0	0	0	0	0	0	0
02:45 PM	0	0	0	0	0	0	0	0	0	0	0	0	0	0	0	0	0	0	0
Total	0	0	0	0	0	0	0	0	0	0	0	0	0	0	0	0	0	0	0
03:00 PM	0	0	0	0	0	0	0	0	0	0	0	0	0	0	0	0	0	0	0
03:15 PM	0	0	0	0	0	0	0	0	0	0	0	0	0	0	0	0	0	0	0
03:30 PM	0	0	0	0	0	0	0	0	0	0	0	2	0	0	0	1	3	0	3
03:45 PM	0	0	0	0	0	0	0	0	0	0	0	0	0	0	0	1	1	0	1
Total	0	0	0	0	0	0	0	0	0	0	0	2	0	0	0	2	4	0	4
04:00 PM	0	0	0	0	0	0	0	0	0	0	0	0	0	0	0	0	0	0	0
04:15 PM	0	0	0	0	0	0	0	0	0	0	0	0	0	0	0	0	0	0	0
04:30 PM	0	0	0	0	0	0	0	0	0	0	0	0	0	0	0	1	1	0	1
04:45 PM	0	0	0	0	0	0	0	0	0	0	0	1	0	0	0	0	1	0	1
Total	0	0	0	0	0	0	0	0	0	0	0	1	0	0	0	1	2	0	2
05:00 PM	0	0	0	0	0	0	0	0	0	0	0	0	0	0	0	0	0	0	0
05:15 PM	0	0	0	0	0	0	0	0	0	0	0	0	0	0	0	0	0	0	0
05:30 PM	0	0	0	0	0	0	0	0	0	0	0	0	0	0	0	0	0	0	0
05:45 PM	0	0	0	0	0	0	0	0	0	0	0	0	0	0	0	0	0	0	0
Total	0	0	0	0	0	0	0	0	0	0	0	0	0	0	0	0	0	0	0

Accurate Counts
978-664-2565

N/S Street : Acton Plaza / TD Bank Dwy
E/W Street : Route 111
City/State : Acton, MA
Weather : Clear

File Name : 11810001
Site Code : 11810001
Start Date : 10/17/2012
Page No : 2

Groups Printed- Bikes Peds

	Acton Plaza From North				Rte 111 From East				TD Bank Drwy From South				Rte111 From West						
Start Time	Left	Thru	Right	Peds	Left	Thru	Right	Peds	Left	Thru	Right	Peds	Left	Thru	Right	Peds	Exclu. Total	Inclu. Total	Int. Total
06:00 PM	0	0	0	0	0	0	0	0	0	0	0	0	0	0	0	0	0	0	0
06:15 PM	0	0	0	0	0	0	0	0	0	0	0	0	0	0	0	0	0	0	0
06:30 PM	0	0	0	0	0	0	0	0	0	0	0	0	0	0	0	0	0	0	0
06:45 PM	0	0	0	0	0	0	0	0	0	0	0	1	0	0	0	0	1	0	1
Total	0	0	0	0	0	0	0	0	0	0	0	1	0	0	0	0	1	0	1
Grand Total	0	0	0	0	0	0	0	2	0	0	0	7	0	1	0	5	14	1	15
Apprch %	0	0	0		0	0	0		0	0	0		0	100	0				
Total %	0	0	0		0	0	0		0	0	0		0	100	0		93.3	6.7	

	Acton Plaza From North				Rte 111 From East				TD Bank Drwy From South				Rte111 From West				
Start Time	Left	Thru	Right	App. Total	Left	Thru	Right	App. Total	Left	Thru	Right	App. Total	Left	Thru	Right	App. Total	Int. Total
Peak Hour Analysis From 07:00 AM to 09:45 AM - Peak 1 of 1																	
Peak Hour for Entire Intersection Begins at 07:00 AM																	
07:00 AM	0	0	0	0	0	0	0	0	0	0	0	0	0	0	0	0	0
07:15 AM	0	0	0	0	0	0	0	0	0	0	0	0	0	0	0	0	0
07:30 AM	0	0	0	0	0	0	0	0	0	0	0	0	0	0	0	0	0
07:45 AM	0	0	0	0	0	0	0	0	0	0	0	0	0	0	0	0	0
Total Volume	0	0	0	0	0	0	0	0	0	0	0	0	0	0	0	0	0
% App. Total	0	0	0		0	0	0		0	0	0		0	0	0		
PHF	.000	.000	.000	.000	.000	.000	.000	.000	.000	.000	.000	.000	.000	.000	.000	.000	.000

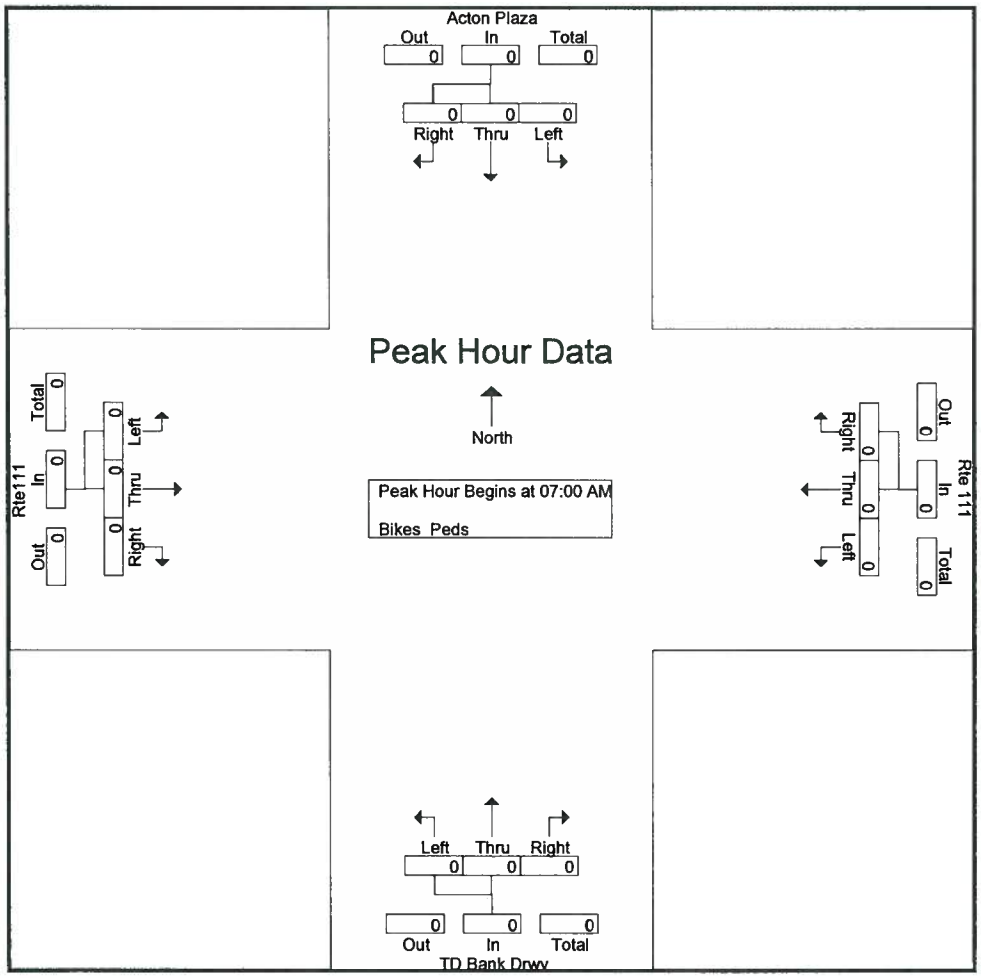

Accurate Counts
978-664-2565

N/S Street : Acton Plaza / TD Bank Dwy
E/W Street : Route 111
City/State : Acton, MA
Weather : Clear

File Name : 11810001
Site Code : 11810001
Start Date : 10/17/2012
Page No : 3

	Acton Plaza From North				Rte 111 From East				TD Bank Drwy From South				Rte111 From West				
Start Time	Left	Thru	Right	App. Total	Left	Thru	Right	App. Total	Left	Thru	Right	App. Total	Left	Thru	Right	App. Total	Int. Total
Peak Hour Analysis From 07:00 AM to 09:45 AM - Peak 1 of 1																	
Peak Hour for Each Approach Begins at:																	
	07:00 AM				07:00 AM				07:00 AM				07:00 AM				
+0 mins.	0	0	0	0	0	0	0	0	0	0	0	0	0	0	0	0	
+15 mins.	0	0	0	0	0	0	0	0	0	0	0	0	0	0	0	0	
+30 mins.	0	0	0	0	0	0	0	0	0	0	0	0	0	0	0	0	
+45 mins.	0	0	0	0	0	0	0	0	0	0	0	0	0	0	0	0	
Total Volume	0	0	0	0	0	0	0	0	0	0	0	0	0	0	0	0	
% App. Total	0	0	0		0	0	0		0	0	0		0	0	0		
PHF	.000	.000	.000	.000	.000	.000	.000	.000	.000	.000	.000	.000	.000	.000	.000	.000	

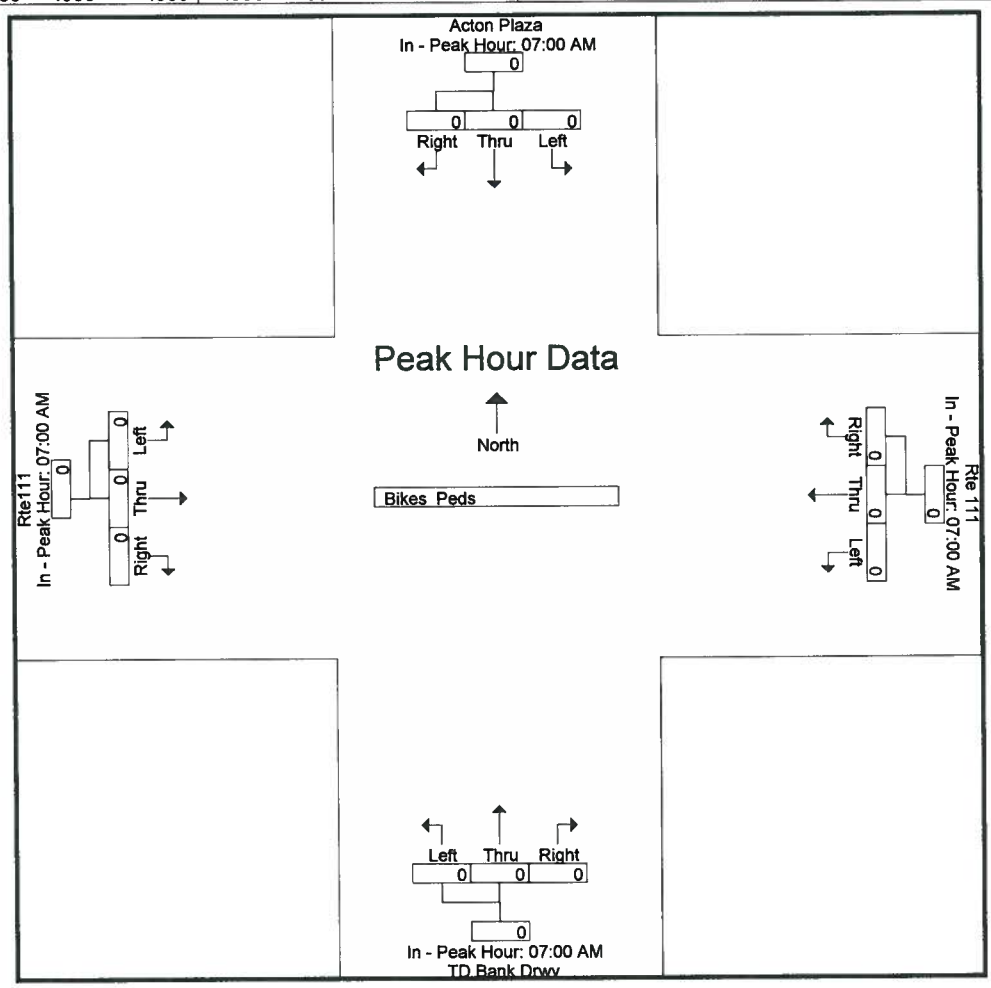

Peak Hour Analysis From 10:00 AM to 01:45 PM - Peak 1 of 1																	
Peak Hour for Entire Intersection Begins at 10:00 AM																	
10:00 AM	0	0	0	0	0	0	0	0	0	0	0	0	0	1	0	1	1
10:15 AM	0	0	0	0	0	0	0	0	0	0	0	0	0	0	0	0	0
10:30 AM	0	0	0	0	0	0	0	0	0	0	0	0	0	0	0	0	0
10:45 AM	0	0	0	0	0	0	0	0	0	0	0	0	0	0	0	0	0
Total Volume	0	0	0	0	0	0	0	0	0	0	0	0	0	1	0	1	1
% App. Total	0	0	0		0	0	0		0	0	0		0	100	0		
PHF	.000	.000	.000	.000	.000	.000	.000	.000	.000	.000	.000	.000	.000	.250	.000	.250	.250

Accurate Counts
978-664-2565

N/S Street : Acton Plaza / TD Bank Dwy
E/W Street : Route 111
City/State : Acton, MA
Weather : Clear

File Name : 11810001
Site Code : 11810001
Start Date : 10/17/2012
Page No : 4

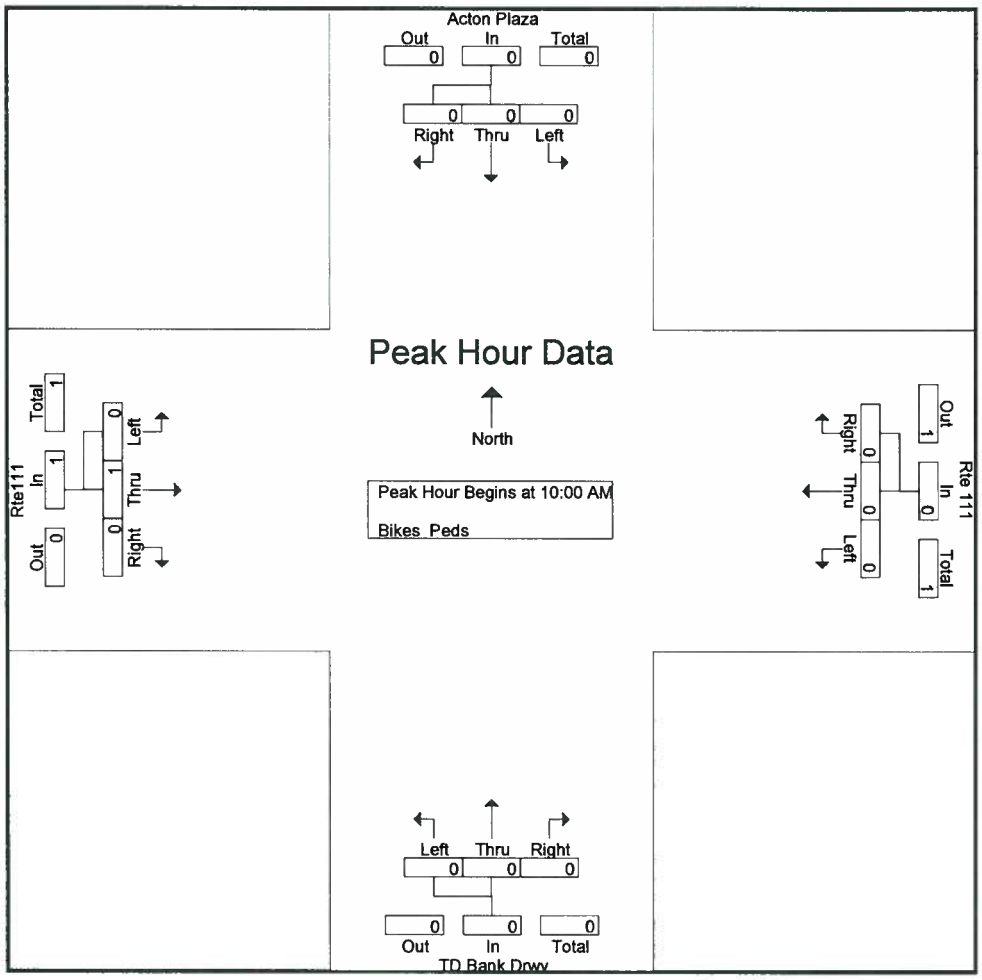

Peak Hour Analysis From 10:00 AM to 01:45 PM - Peak 1 of 1
Peak Hour for Each Approach Begins at:

	10:00 AM				10:00 AM				10:00 AM				10:00 AM			
+0 mins.	0	0	0	0	0	0	0	0	0	0	0	0	0	1	0	1
+15 mins.	0	0	0	0	0	0	0	0	0	0	0	0	0	0	0	0
+30 mins.	0	0	0	0	0	0	0	0	0	0	0	0	0	0	0	0
+45 mins.	0	0	0	0	0	0	0	0	0	0	0	0	0	0	0	0
Total Volume	0	0	0	0	0	0	0	0	0	0	0	0	0	1	0	1
% App. Total	0	0	0		0	0	0		0	0	0		0	100	0	
PHF	.000	.000	.000	.000	.000	.000	.000	.000	.000	.000	.000	.000	.000	.250	.000	.250

Accurate Counts
978-664-2565

N/S Street : Acton Plaza / TD Bank Dwy
E/W Street : Route 111
City/State : Acton, MA
Weather : Clear

File Name : 11810001
Site Code : 11810001
Start Date : 10/17/2012
Page No : 5

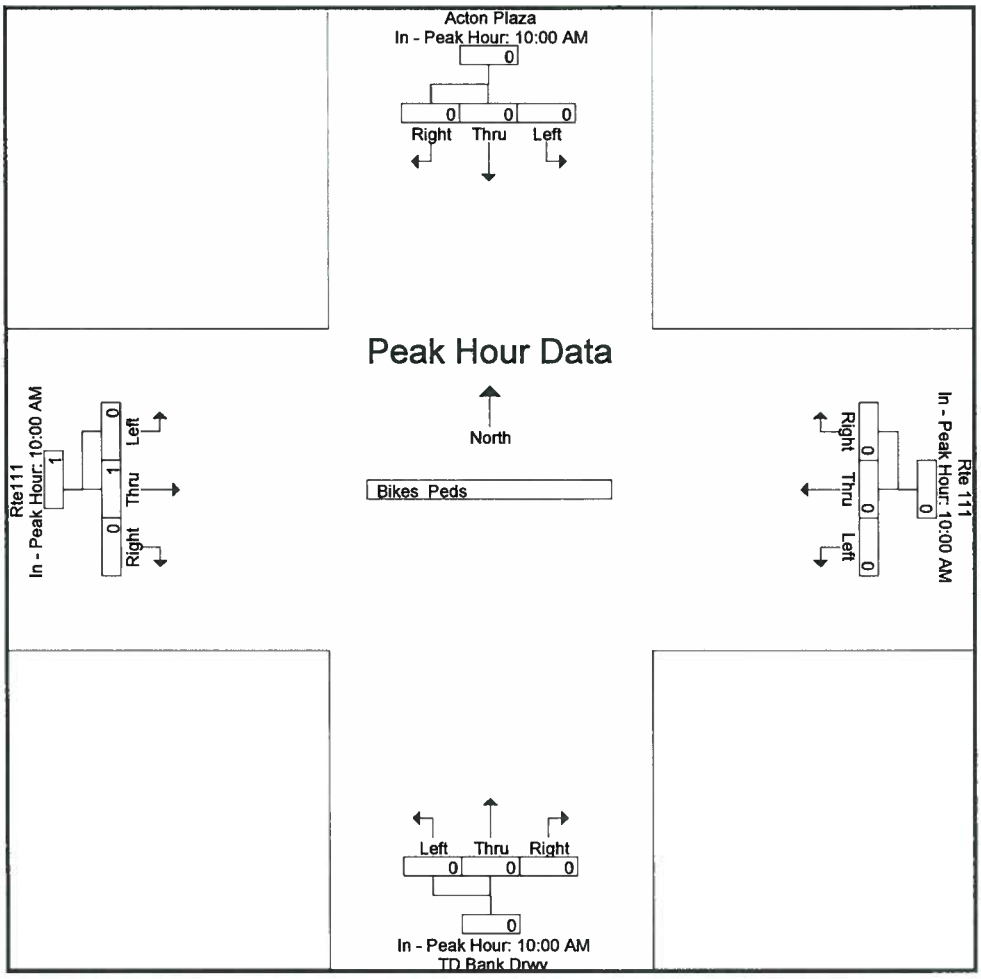

Peak Hour Analysis From 02:00 PM to 06:45 PM - Peak 1 of 1
Peak Hour for Entire Intersection Begins at 02:00 PM

02:00 PM	0	0	0	0	0	0	0	0	0	0	0	0	0	0	0	0	0
02:15 PM	0	0	0	0	0	0	0	0	0	0	0	0	0	0	0	0	0
02:30 PM	0	0	0	0	0	0	0	0	0	0	0	0	0	0	0	0	0
02:45 PM	0	0	0	0	0	0	0	0	0	0	0	0	0	0	0	0	0
Total Volume	0	0	0	0	0	0	0	0	0	0	0	0	0	0	0	0	0
% App. Total	0	0	0		0	0	0		0	0	0		0	0	0		
PHF	.000	.000	.000	.000	.000	.000	.000	.000	.000	.000	.000	.000	.000	.000	.000	.000	.000

Accurate Counts
978-664-2565

N/S Street : Acton Plaza / TD Bank Dwy
E/W Street : Route 111
City/State : Acton, MA
Weather : Clear

File Name : 11810001
Site Code : 11810001
Start Date : 10/17/2012
Page No : 6

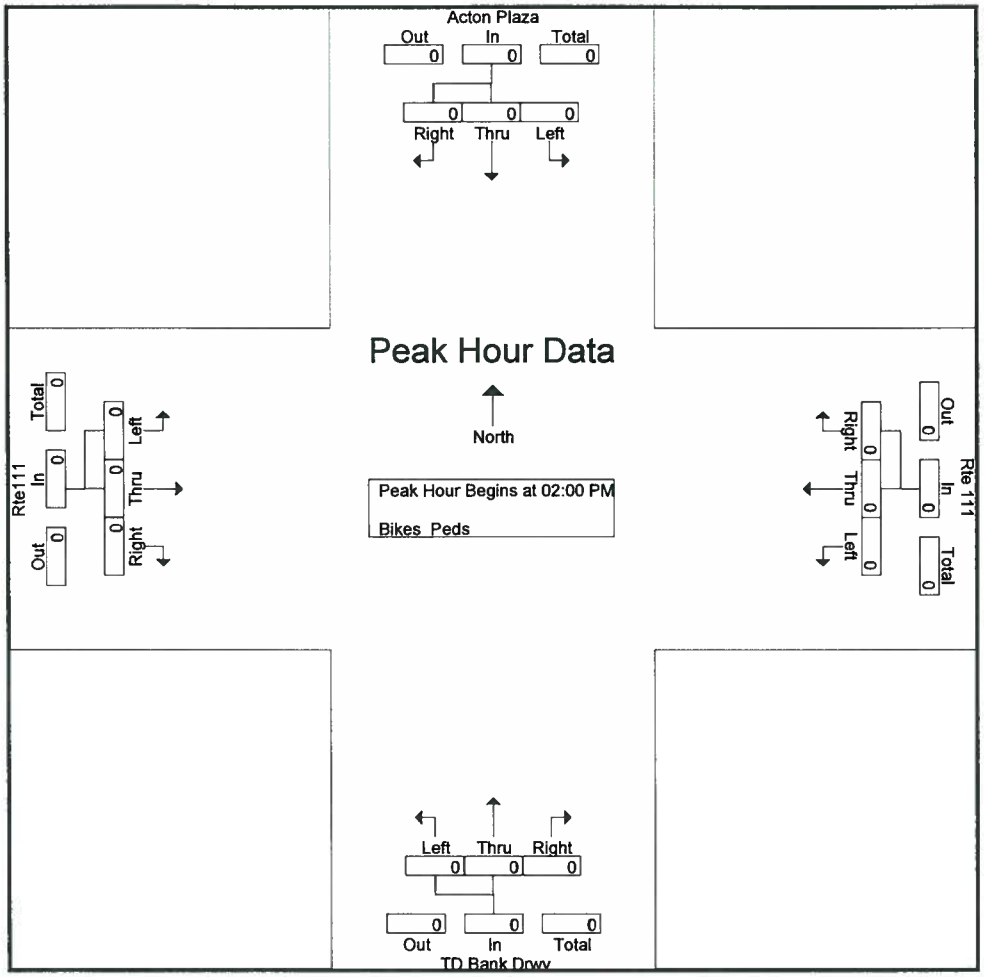

Peak Hour Analysis From 02:00 PM to 06:45 PM - Peak 1 of 1
Peak Hour for Each Approach Begins at:

	02:00 PM				02:00 PM				02:00 PM				02:00 PM			
+0 mins.	0	0	0	0	0	0	0	0	0	0	0	0	0	0	0	0
+15 mins.	0	0	0	0	0	0	0	0	0	0	0	0	0	0	0	0
+30 mins.	0	0	0	0	0	0	0	0	0	0	0	0	0	0	0	0
+45 mins.	0	0	0	0	0	0	0	0	0	0	0	0	0	0	0	0
Total Volume	0	0	0	0	0	0	0	0	0	0	0	0	0	0	0	0
% App. Total	0	0	0		0	0	0		0	0	0		0	0	0	
PHF	.000	.000	.000	.000	.000	.000	.000	.000	.000	.000	.000	.000	.000	.000	.000	.000

Accurate Counts
978-664-2565

N/S Street : Acton Plaza / TD Bank Dwy
E/W Street : Route 111
City/State : Acton, MA
Weather : Clear

File Name : 11810001
Site Code : 11810001
Start Date : 10/17/2012
Page No : 7

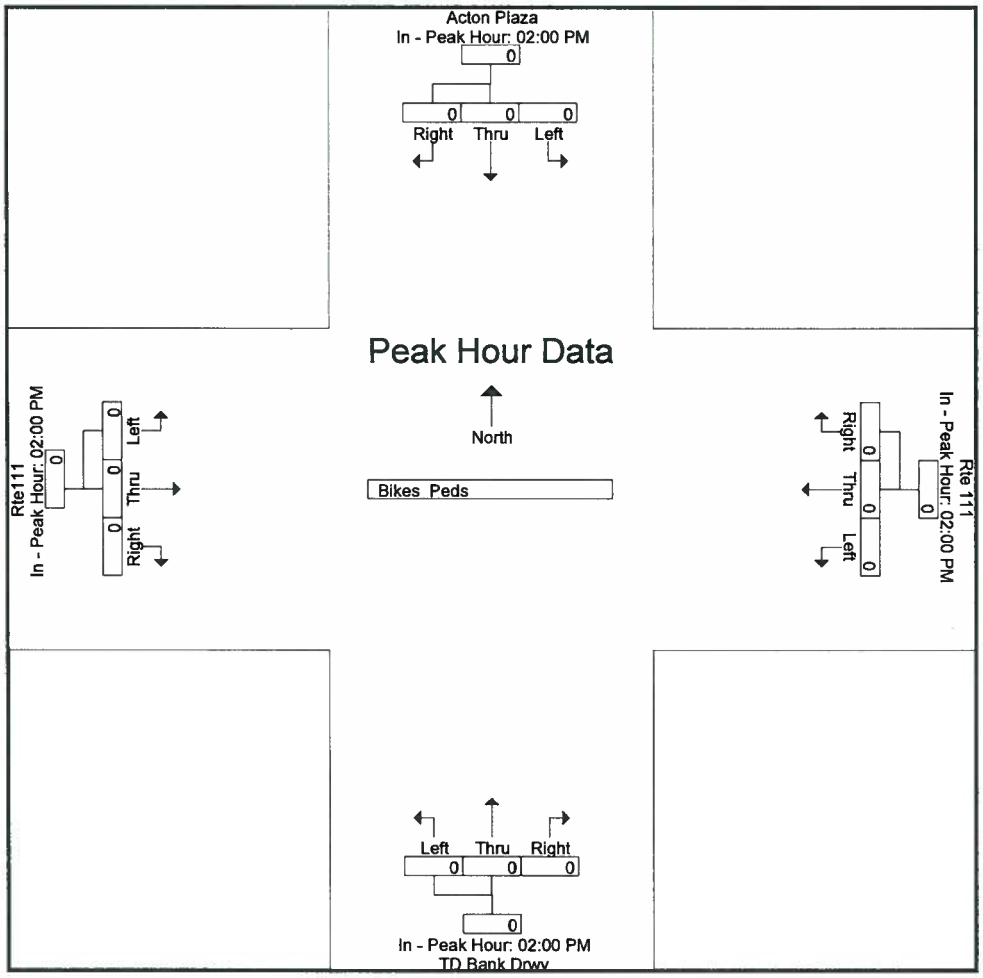

Accurate Counts
978-664-2565

N/S Street : Acton Plaza / TD Bank Dwy
E/W Street : Route 111
City/State : Acton, MA
Weather : Clear

File Name : 11810001
Site Code : 11810001
Start Date : 10/17/2012
Page No : 1

Groups Printed- TD West DWay

	Acton Plaza From North			Rte 111 From East			TD Bank Drwy From South			Rte111 From West			
Start Time	Left	Thru	Right	Left	Thru	Right	Left	Thru	Right	Left	Thru	Right	Int. Total
07:00 AM	0	0	0	0	0	0	0	0	0	0	0	1	1
07:15 AM	0	0	0	0	0	0	0	0	0	0	0	0	0
07:30 AM	0	0	0	1	0	0	0	0	0	0	0	0	1
07:45 AM	0	0	0	1	0	0	0	0	1	0	0	0	2
Total	0	0	0	2	0	0	0	0	1	0	0	1	4
08:00 AM	0	0	0	1	0	0	0	0	1	0	0	0	2
08:15 AM	0	0	0	0	0	0	0	0	0	0	0	0	0
08:30 AM	0	0	0	0	0	0	0	0	0	0	0	0	0
08:45 AM	0	0	0	1	0	0	0	0	0	0	0	0	1
Total	0	0	0	2	0	0	0	0	1	0	0	0	3
09:00 AM	0	0	0	0	0	0	0	0	0	0	0	0	0
09:15 AM	0	0	0	0	0	0	1	0	0	0	0	1	2
09:30 AM	0	0	0	2	0	0	1	0	1	0	0	3	7
09:45 AM	0	0	0	1	0	0	0	0	3	0	0	4	8
Total	0	0	0	3	0	0	2	0	4	0	0	8	17
10:00 AM	0	0	0	2	0	0	0	0	0	0	1	1	4
10:15 AM	0	0	0	0	0	0	0	0	0	0	0	3	3
10:30 AM	0	0	0	1	0	0	0	0	0	0	0	1	2
10:45 AM	0	0	0	1	0	0	1	0	0	0	0	1	3
Total	0	0	0	4	0	0	1	0	0	0	1	6	12
11:00 AM	0	0	0	0	0	0	2	0	0	0	0	0	2
11:15 AM	0	0	0	0	0	0	0	0	0	0	0	0	0
11:30 AM	0	0	0	0	0	0	0	0	2	0	0	2	4
11:45 AM	0	0	0	5	0	0	2	0	3	0	0	1	11
Total	0	0	0	5	0	0	4	0	5	0	0	3	17
12:00 PM	0	0	0	1	0	0	1	0	1	0	0	0	3
12:15 PM	0	0	0	1	0	0	0	0	2	0	0	0	3
12:30 PM	0	0	0	1	0	0	0	0	1	0	0	0	2
12:45 PM	0	0	0	0	0	0	0	0	0	0	0	0	0
Total	0	0	0	3	0	0	1	0	4	0	0	0	8
01:00 PM	0	0	0	0	0	0	0	0	1	0	0	1	2
01:15 PM	0	0	0	2	0	0	0	0	2	0	0	0	4
01:30 PM	0	0	0	3	0	0	1	0	2	0	0	2	8
01:45 PM	0	0	0	2	0	0	2	0	3	0	0	1	8
Total	0	0	0	7	0	0	3	0	8	0	0	4	22
02:00 PM	0	0	0	3	0	0	2	0	1	0	0	1	7
02:15 PM	0	0	0	3	0	0	1	0	0	0	0	0	4
02:30 PM	0	0	0	1	0	0	0	0	0	0	0	3	4
02:45 PM	0	0	0	0	0	0	1	0	0	0	0	2	3
Total	0	0	0	7	0	0	4	0	1	0	0	6	18
03:00 PM	0	0	0	1	0	0	1	0	0	0	0	2	4
03:15 PM	0	0	0	0	0	0	0	0	2	0	0	0	2
03:30 PM	0	0	0	0	0	0	1	0	0	0	0	1	2
03:45 PM	0	0	0	0	0	0	2	0	0	0	0	2	4
Total	0	0	0	1	0	0	4	0	2	0	0	5	12
04:00 PM	0	0	0	1	0	0	1	0	0	0	0	2	4
04:15 PM	0	0	0	4	0	0	1	0	2	0	0	2	9
04:30 PM	0	0	0	0	0	0	1	0	2	0	0	2	5
04:45 PM	0	0	0	2	0	0	0	0	0	0	0	0	2
Total	0	0	0	7	0	0	3	0	4	0	0	6	20
05:00 PM	0	0	0	4	0	0	2	0	0	0	1	0	7
05:15 PM	0	0	0	1	0	0	0	0	0	0	0	1	2
05:30 PM	0	0	0	1	0	0	1	0	0	0	0	1	3
05:45 PM	0	0	0	0	0	0	2	0	0	0	0	2	4
Total	0	0	0	6	0	0	5	0	0	0	1	4	16

Accurate Counts
978-664-2565

N/S Street : Acton Plaza / TD Bank Dwy
/W Street : Route 111
ity/State : Acton, MA
Weather : Clear

File Name : 11810001
Site Code : 11810001
Start Date : 10/17/2012
Page No : 2

Groups Printed- TD West DWay

	Acton Plaza From North			Rte 111 From East			TD Bank Drwy From South			Rte111 From West			
Start Time	Left	Thru	Right	Left	Thru	Right	Left	Thru	Right	Left	Thru	Right	Int. Total
06:00 PM	0	0	0	1	0	0	1	0	1	0	0	1	4
06:15 PM	0	0	0	0	0	0	0	0	0	0	0	1	1
06:30 PM	0	0	0	0	0	0	0	0	1	0	0	1	2
06:45 PM	0	0	0	2	0	0	0	0	0	0	0	2	4
Total	0	0	0	3	0	0	1	0	2	0	0	5	11
Grand Total	0	0	0	50	0	0	28	0	32	0	2	48	160
Apprch %	0	0	0	100	0	0	46.7	0	53.3	0	4	96	
Total %	0	0	0	31.2	0	0	17.5	0	20	0	1.2	30	

	Acton Plaza From North				Rte 111 From East				TD Bank Drwy From South				Rte111 From West				
Start Time	Left	Thru	Right	App. Total	Left	Thru	Right	App. Total	Left	Thru	Right	App. Total	Left	Thru	Right	App. Total	Int. Total
Peak Hour Analysis From 07:00 AM to 09:45 AM - Peak 1 of 1																	
Peak Hour for Entire Intersection Begins at 09:00 AM																	
09:00 AM	0	0	0	0	0	0	0	0	0	0	0	0	0	0	0	0	0
09:15 AM	0	0	0	0	0	0	0	0	1	0	0	1	0	0	1	1	2
09:30 AM	0	0	0	0	2	0	0	2	1	0	1	2	0	0	3	3	7
09:45 AM	0	0	0	0	1	0	0	1	0	0	3	3	0	0	4	4	8
Total Volume	0	0	0	0	3	0	0	3	2	0	4	6	0	0	8	8	17
% App. Total	0	0	0		100	0	0		33.3	0	66.7		0	0	100		
PHF	.000	.000	.000	.000	.375	.000	.000	.375	.500	.000	.333	.500	.000	.000	.500	.500	.531

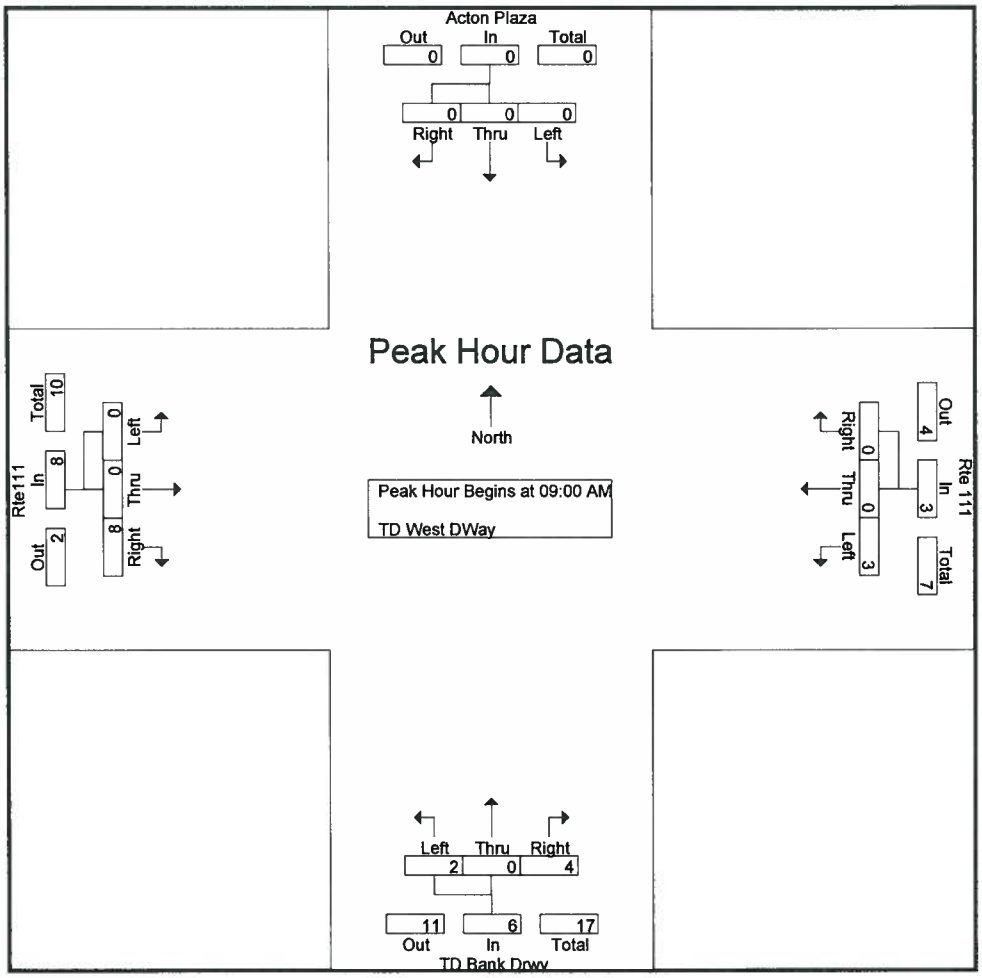

Accurate Counts
978-664-2565

N/S Street : Acton Plaza / TD Bank Dwy
E/W Street : Route 111
City/State : Acton, MA
Weather : Clear

File Name : 11810001
Site Code : 11810001
Start Date : 10/17/2012
Page No : 3

	Acton Plaza From North				Rte 111 From East				TD Bank Drwy From South				Rte111 From West				
Start Time	Left	Thru	Right	App. Total	Left	Thru	Right	App. Total	Left	Thru	Right	App. Total	Left	Thru	Right	App. Total	Int. Total
Peak Hour Analysis From 07:00 AM to 09:45 AM - Peak 1 of 1																	
Peak Hour for Each Approach Begins at:																	
	07:00 AM				07:15 AM				09:00 AM				09:00 AM				
+0 mins.	0	0	0	0	0	0	0	0	0	0	0	0	0	0	0	0	
+15 mins.	0	0	0	0	1	0	0	1	1	0	0	1	0	0	1	1	
+30 mins.	0	0	0	0	1	0	0	1	1	0	1	2	0	0	3	3	
+45 mins.	0	0	0	0	1	0	0	1	0	0	3	3	0	0	4	4	
Total Volume	0	0	0	0	3	0	0	3	2	0	4	6	0	0	8	8	
% App. Total	0	0	0		100	0	0		33.3	0	66.7		0	0	100		
PHF	.000	.000	.000	.000	.750	.000	.000	.750	.500	.000	.333	.500	.000	.000	.500	.500	

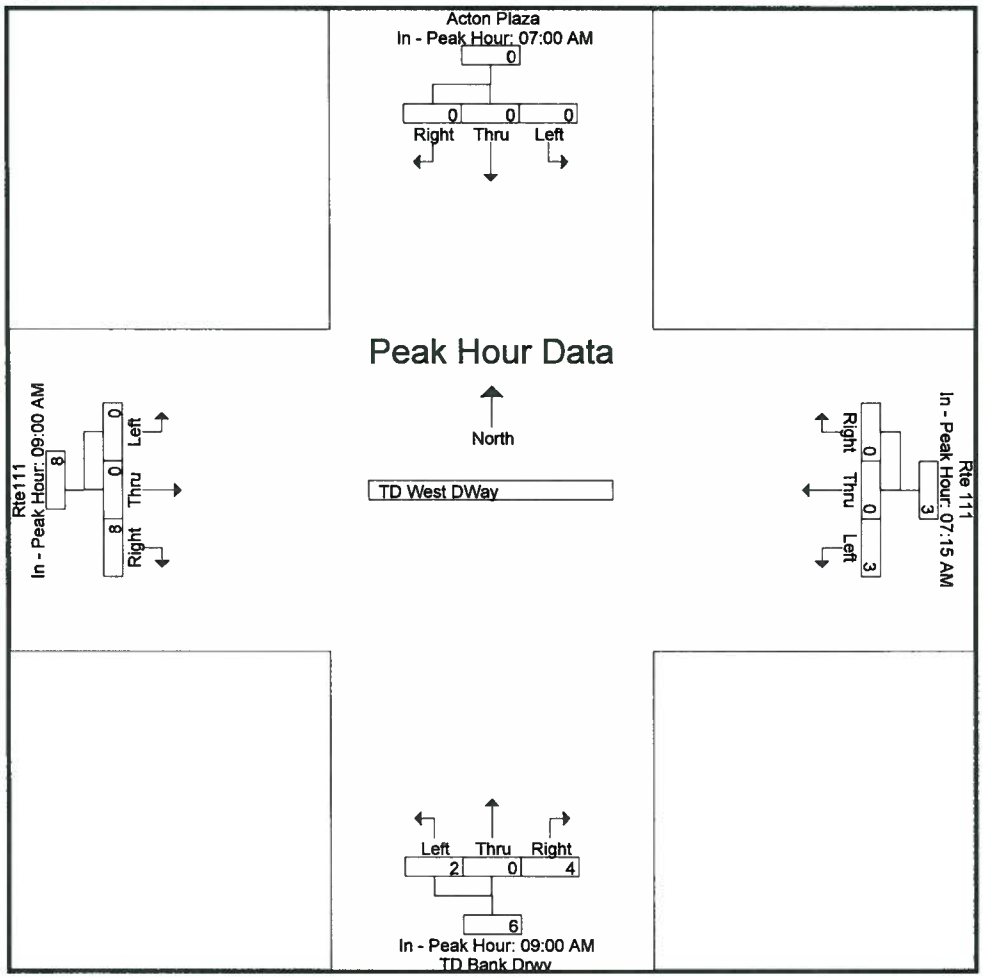

Peak Hour Analysis From 10:00 AM to 01:45 PM - Peak 1 of 1																	
Peak Hour for Entire Intersection Begins at 01:00 PM																	
01:00 PM	0	0	0	0	0	0	0	0	0	0	1	1	0	0	1	1	2
01:15 PM	0	0	0	0	2	0	0	2	0	0	2	2	0	0	0	0	4
01:30 PM	0	0	0	0	3	0	0	3	1	0	2	3	0	0	2	2	8
01:45 PM	0	0	0	0	2	0	0	2	2	0	3	5	0	0	1	1	8
Total Volume	0	0	0	0	7	0	0	7	3	0	8	11	0	0	4	4	22
% App. Total	0	0	0		100	0	0		27.3	0	72.7		0	0	100		
PHF	.000	.000	.000	.000	.583	.000	.000	.583	.375	.000	.667	.550	.000	.000	.500	.500	.688

Accurate Counts
978-664-2565

N/S Street : Acton Plaza / TD Bank Dwy
E/W Street : Route 111
City/State : Acton, MA
Weather : Clear

File Name : 11810001
Site Code : 11810001
Start Date : 10/17/2012
Page No : 4

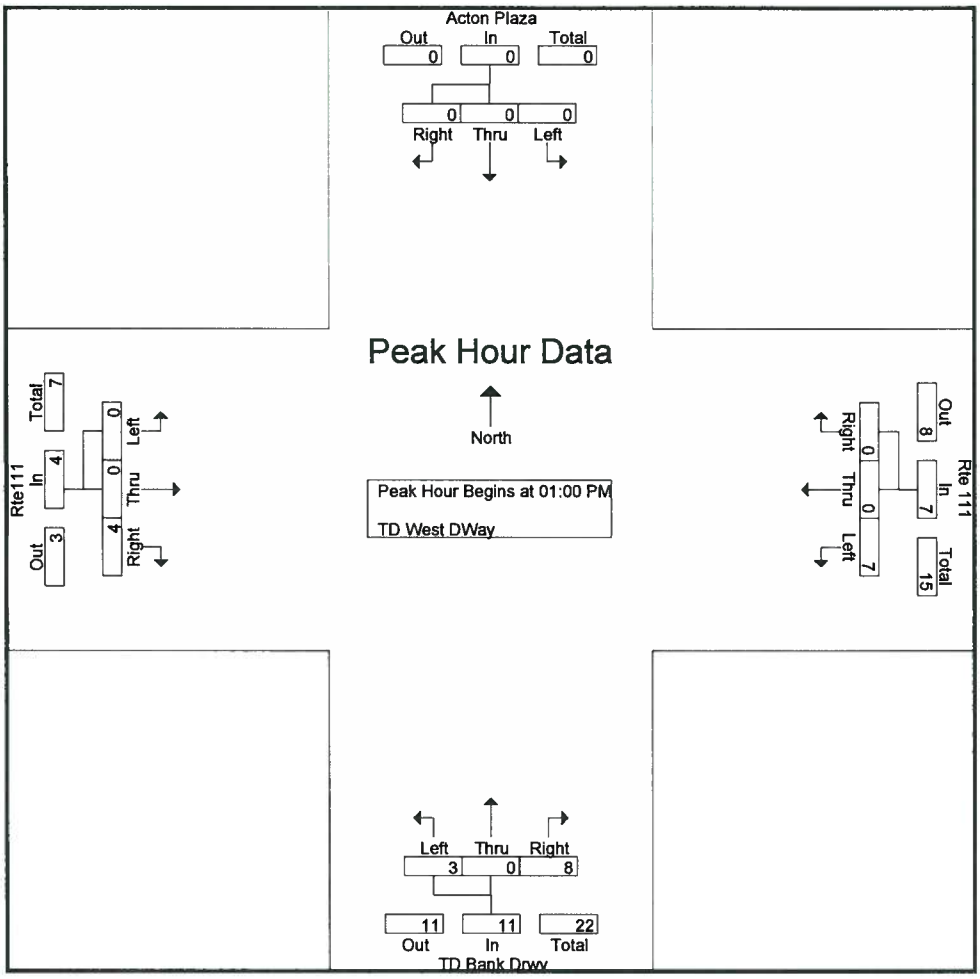

Peak Hour Analysis From 10:00 AM to 01:45 PM - Peak 1 of 1
Peak Hour for Each Approach Begins at:

	10:00 AM				11:45 AM				11:30 AM				10:00 AM			
+0 mins.	0	0	0	0	**5**	0	0	**5**	0	0	2	2	0	**1**	1	2
+15 mins.	0	0	0	0	1	0	0	1	**2**	0	**3**	**5**	0	0	**3**	**3**
+30 mins.	0	0	0	0	1	0	0	1	1	0	1	2	0	0	1	1
+45 mins.	0	0	0	0	1	0	0	1	0	0	2	2	0	0	1	1
Total Volume	0	0	0	0	8	0	0	8	3	0	8	11	0	1	6	7
% App. Total	0	0	0		100	0	0		27.3	0	72.7		0	14.3	85.7	
PHF	.000	.000	.000	.000	.400	.000	.000	.400	.375	.000	.667	.550	.000	.250	.500	.583

Accurate Counts
978-664-2565

N/S Street : Acton Plaza / TD Bank Dwy
E/W Street : Route 111
City/State : Acton, MA
Weather : Clear

File Name : 11810001
Site Code : 11810001
Start Date : 10/17/2012
Page No : 5

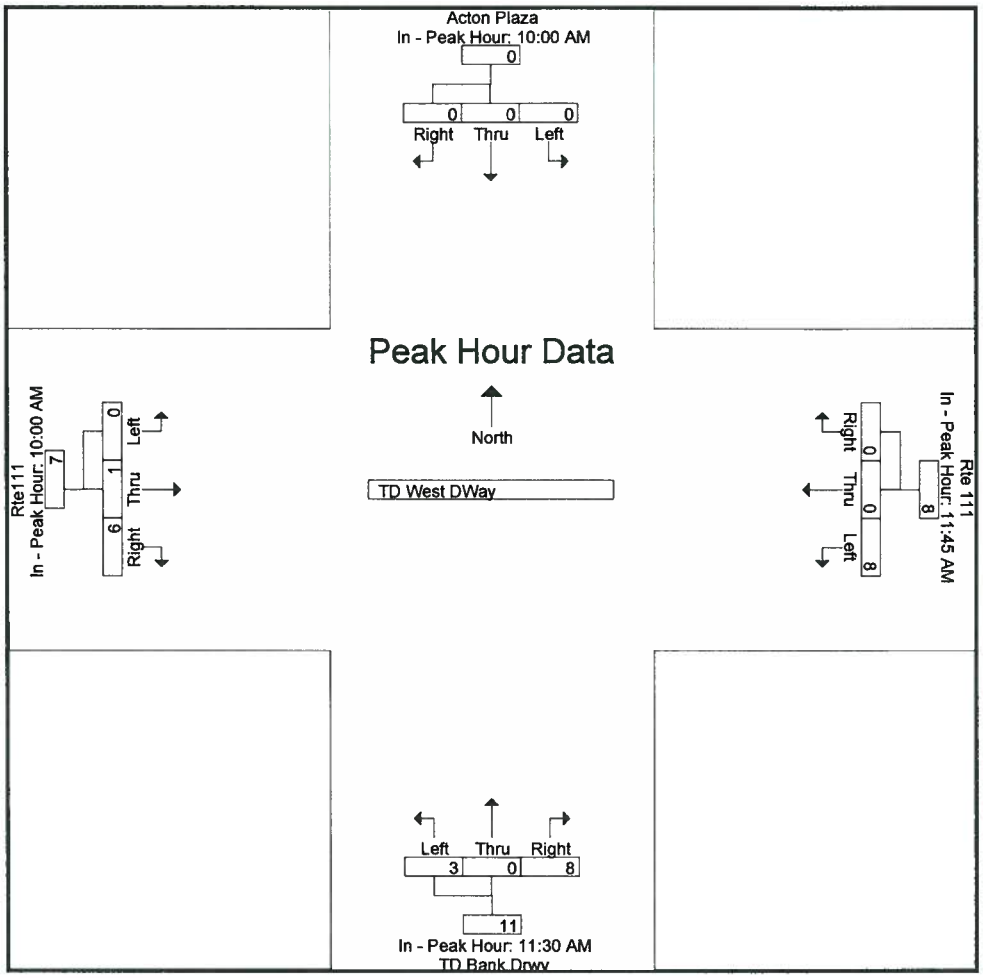

Peak Hour Analysis From 02:00 PM to 06:45 PM - Peak 1 of 1
Peak Hour for Entire Intersection Begins at 04:15 PM

04:15 PM	0	0	0	0	**4**	0	0	**4**	1	0	**2**	**3**	0	0	**2**	**2**	**9**
04:30 PM	0	0	0	0	0	0	0	0	1	0	2	3	0	0	2	2	5
04:45 PM	0	0	0	0	2	0	0	2	0	0	0	0	0	0	0	0	2
05:00 PM	0	0	0	0	4	0	0	4	**2**	0	0	2	0	**1**	0	1	7
Total Volume	0	0	0	0	10	0	0	10	4	0	4	8	0	1	4	5	23
% App. Total	0	0	0		100	0	0		50	0	50		0	20	80		
PHF	.000	.000	.000	.000	.625	.000	.000	.625	.500	.000	.500	.667	.000	.250	.500	.625	.639

Accurate Counts
978-664-2565

N/S Street : Acton Plaza / TD Bank Dwy
E/W Street : Route 111
City/State : Acton, MA
Weather : Clear

File Name : 11810001
Site Code : 11810001
Start Date : 10/17/2012
Page No : 6

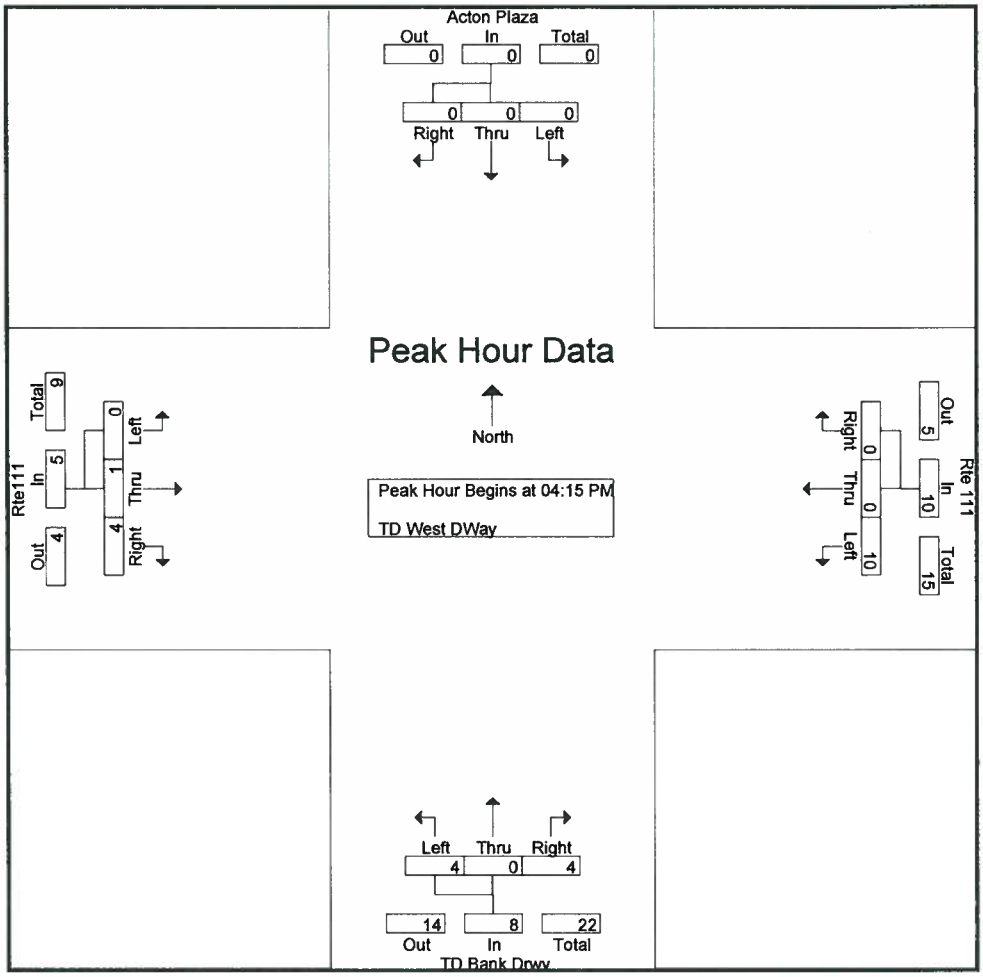

Peak Hour Analysis From 02:00 PM to 06:45 PM - Peak 1 of 1
Peak Hour for Each Approach Begins at:

	02:00 PM				04:15 PM				03:45 PM				03:45 PM			
+0 mins.	0	0	0	0	**4**	0	0	**4**	**2**	0	0	2	0	0	**2**	**2**
+15 mins.	0	0	0	0	0	0	0	0	1	0	0	1	0	0	2	2
+30 mins.	0	0	0	0	2	0	0	2	1	0	**2**	**3**	0	0	2	2
+45 mins.	0	0	0	0	4	0	0	4	1	0	2	3	0	0	2	2
Total Volume	0	0	0	0	10	0	0	10	5	0	4	9	0	0	8	8
% App. Total	0	0	0		100	0	0		55.6	0	44.4		0	0	100	
PHF	.000	.000	.000	.000	.625	.000	.000	.625	.625	.000	.500	.750	.000	.000	1.000	1.000

Accurate Counts
978-664-2565

N/S Street : Acton Plaza / TD Bank Dwy
E/W Street : Route 111
City/State : Acton, MA
Weather : Clear

File Name : 11810001
Site Code : 11810001
Start Date : 10/17/2012
Page No : 7

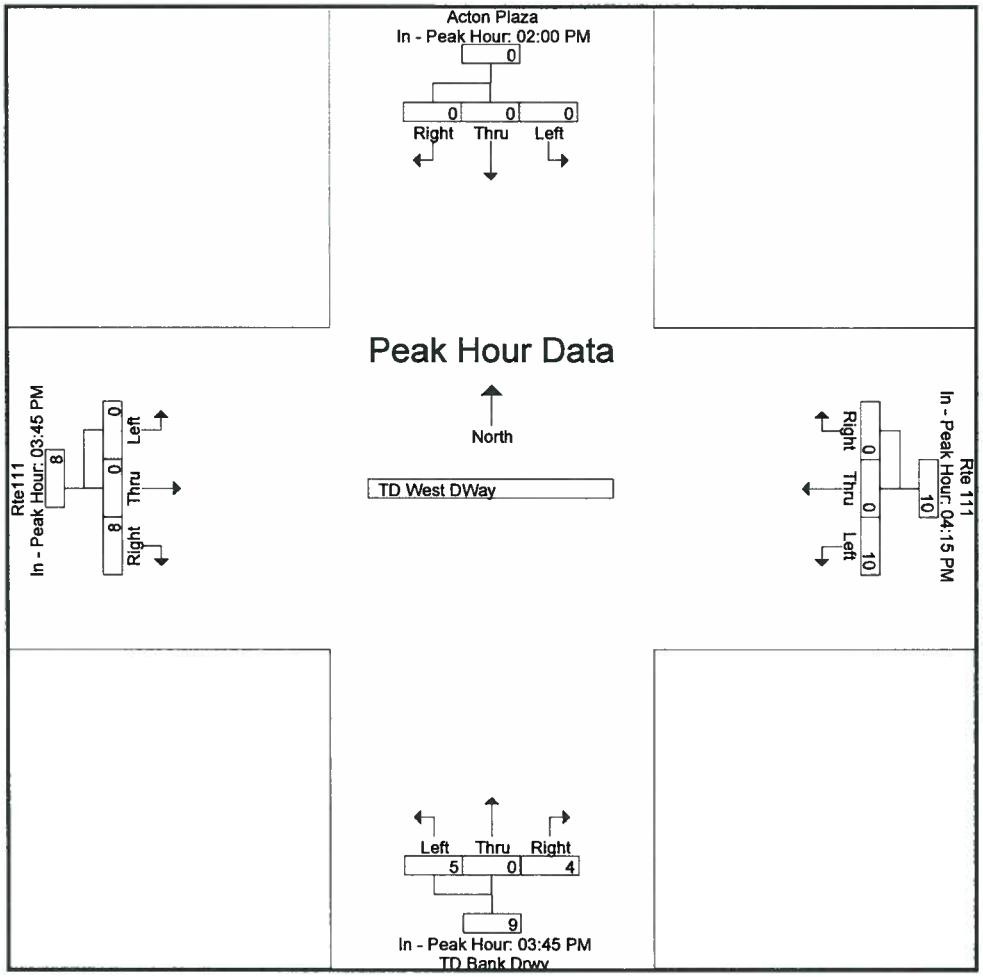

Accurate Counts
978-664-2565

N/S Street : Private Driveway
E/W Street : Route 111
City/State : Acton, MA
Weather : Clear

File Name : 11810002
Site Code : 11810002
Start Date : 10/17/2012
Page No : 1

Groups Printed- Cars - Trucks

	Route 111 From East		Private Dr From South		Route 111 From West		
Start Time	Left	Thru	Left	Right	Thru	Right	Int. Total
07:00 AM	1	0	0	0	0	1	2
07:15 AM	0	0	0	0	0	0	0
07:30 AM	0	0	0	0	0	0	0
07:45 AM	1	0	0	0	0	0	1
Total	2	0	0	0	0	1	3
08:00 AM	1	0	0	1	0	0	2
08:15 AM	0	0	1	0	0	1	2
08:30 AM	0	0	0	0	0	0	0
08:45 AM	0	0	0	0	0	0	0
Total	1	0	1	1	0	1	4
09:00 AM	0	0	0	0	0	0	0
09:15 AM	0	0	0	0	0	0	0
09:30 AM	0	0	0	0	0	1	1
09:45 AM	0	0	1	0	0	3	4
Total	0	0	1	0	0	4	5
10:00 AM	0	0	0	1	0	0	1
10:15 AM	2	0	1	1	0	2	6
10:30 AM	0	0	1	2	0	2	5
10:45 AM	0	0	1	1	0	1	3
Total	2	0	3	5	0	5	15
11:00 AM	0	0	1	0	0	0	1
11:15 AM	0	0	2	0	0	3	5
11:30 AM	0	0	1	0	0	0	1
11:45 AM	0	0	1	1	0	1	3
Total	0	0	5	1	0	4	10
12:00 PM	0	0	0	1	0	1	2
12:15 PM	0	0	0	0	0	0	0
12:30 PM	0	0	0	0	0	1	1
12:45 PM	0	0	2	0	0	3	5
Total	0	0	2	1	0	5	8
01:00 PM	0	0	2	0	0	0	2
01:15 PM	0	0	0	0	0	0	0
01:30 PM	0	0	0	0	0	0	0
01:45 PM	0	0	0	0	0	2	2
Total	0	0	2	0	0	2	4
02:00 PM	0	0	2	0	0	1	3
02:15 PM	0	0	1	0	0	1	2
02:30 PM	0	0	0	0	0	1	1
02:45 PM	1	0	0	1	0	0	2
Total	1	0	3	1	0	3	8
03:00 PM	0	0	1	0	0	1	2
03:15 PM	0	0	1	0	0	0	1
03:30 PM	0	0	0	0	0	0	0
03:45 PM	0	0	0	0	0	0	0
Total	0	0	2	0	0	1	3
04:00 PM	0	0	1	0	0	0	1
04:15 PM	0	0	0	0	0	0	0
04:30 PM	0	0	0	2	0	1	3
04:45 PM	0	0	1	0	0	0	1
Total	0	0	2	2	0	1	5
05:00 PM	0	0	0	0	0	0	0
05:15 PM	0	0	0	0	0	0	0
05:30 PM	0	0	0	0	0	0	0
05:45 PM	0	0	0	0	0	0	0
Total	0	0	0	0	0	0	0

Accurate Counts
978-664-2565

N/S Street : Private Driveway
E/W Street : Route 111
City/State : Acton, MA
Weather : Clear

File Name : 11810002
Site Code : 11810002
Start Date : 10/17/2012
Page No : 2

Groups Printed- Cars - Trucks

	Route 111 From East		Private Dr From South		Route 111 From West		
Start Time	Left	Thru	Left	Right	Thru	Right	Int. Total
06:00 PM	0	0	0	0	0	0	0
06:15 PM	0	0	1	0	0	1	2
06:30 PM	0	0	0	0	0	0	0
06:45 PM	0	0	0	0	0	0	0
Total	0	0	1	0	0	1	2
Grand Total	6	0	22	11	0	28	67
Apprch %	100	0	66.7	33.3	0	100	
Total %	9	0	32.8	16.4	0	41.8	
Cars	6	0	22	11	0	28	67
% Cars	100	0	100	100	0	100	100
Trucks	0	0	0	0	0	0	0
% Trucks	0	0	0	0	0	0	0

	Route 111 From East			Private Dr From South			Route 111 From West			
Start Time	Left	Thru	App. Total	Left	Right	App. Total	Thru	Right	App. Total	Int. Total
Peak Hour Analysis From 07:00 AM to 09:45 AM - Peak 1 of 1										
Peak Hour for Entire Intersection Begins at 07:30 AM										
07:30 AM	0	0	0	0	0	0	0	0	0	0
07:45 AM	1	0	1	0	0	0	0	0	0	1
08:00 AM	1	0	1	0	1	1	0	0	0	2
08:15 AM	0	0	0	1	0	1	0	1	1	2
Total Volume	2	0	2	1	1	2	0	1	1	5
% App. Total	100	0		50	50		0	100		
PHF	.500	.000	.500	.250	.250	.500	.000	.250	.250	.625
Cars	2	0	2	1	1	2	0	1	1	5
% Cars	100	0	100	100	100	100	0	100	100	100
Trucks	0	0	0	0	0	0	0	0	0	0
% Trucks	0	0	0	0	0	0	0	0	0	0

Accurate Counts
978-664-2565

N/S Street : Private Driveway
E/W Street : Route 111
City/State : Acton, MA
Weather : Clear

File Name : 11810002
Site Code : 11810002
Start Date : 10/17/2012
Page No : 3

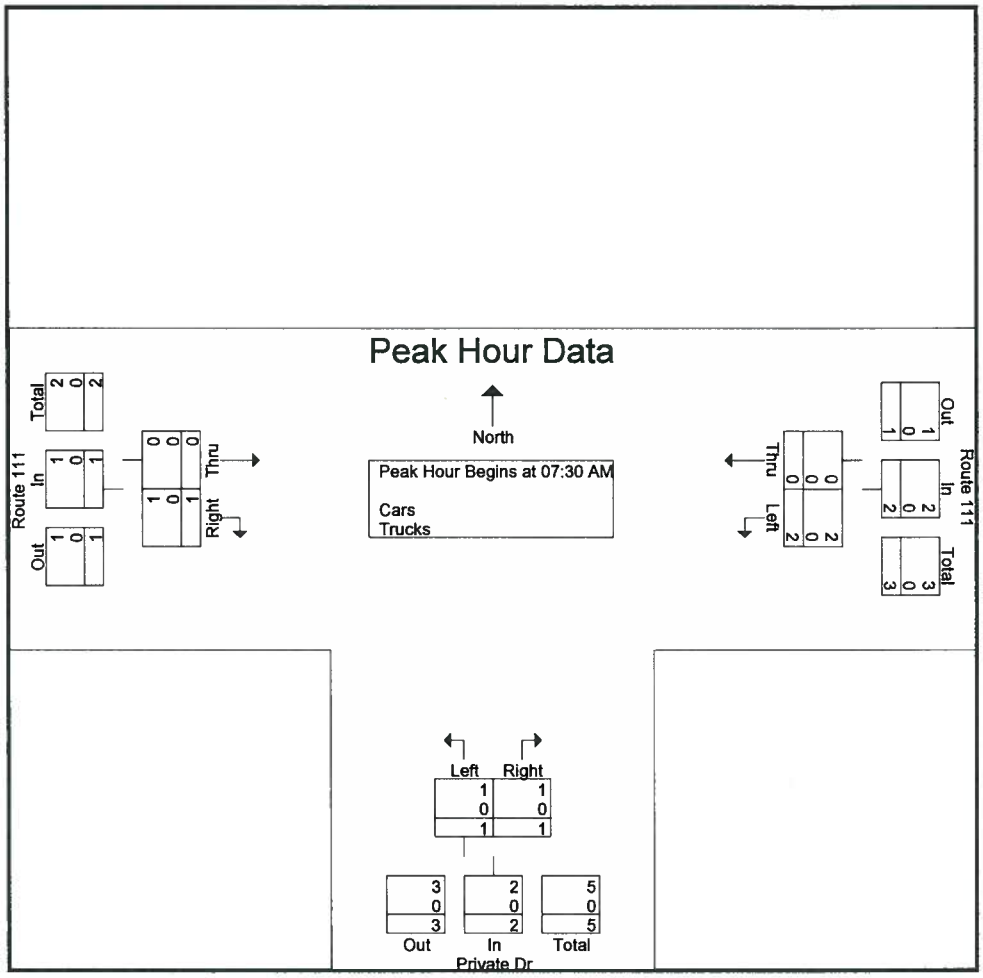

Peak Hour Analysis From 07:00 AM to 09:45 AM - Peak 1 of 1
Peak Hour for Each Approach Begins at:

	07:00 AM			07:30 AM			09:00 AM		
+0 mins.	1	0	1	0	0	0	0	0	0
+15 mins.	0	0	0	0	0	0	0	0	0
+30 mins.	0	0	0	0	1	1	0	1	1
+45 mins.	1	0	1	1	0	1	0	3	3
Total Volume	2	0	2	1	1	2	0	4	4
% App. Total	100	0		50	50		0	100	
PHF	.500	.000	.500	.250	.250	.500	.000	.333	.333
Cars	2	0	2	1	1	2	0	4	4
% Cars	100	0	100	100	100	100	0	100	100
Trucks	0	0	0	0	0	0	0	0	0
% Trucks	0	0	0	0	0	0	0	0	0

Accurate Counts
978-664-2565

N/S Street : Private Driveway
E/W Street : Route 111
City/State : Acton, MA
Weather : Clear

File Name : 11810002
Site Code : 11810002
Start Date : 10/17/2012
Page No : 4

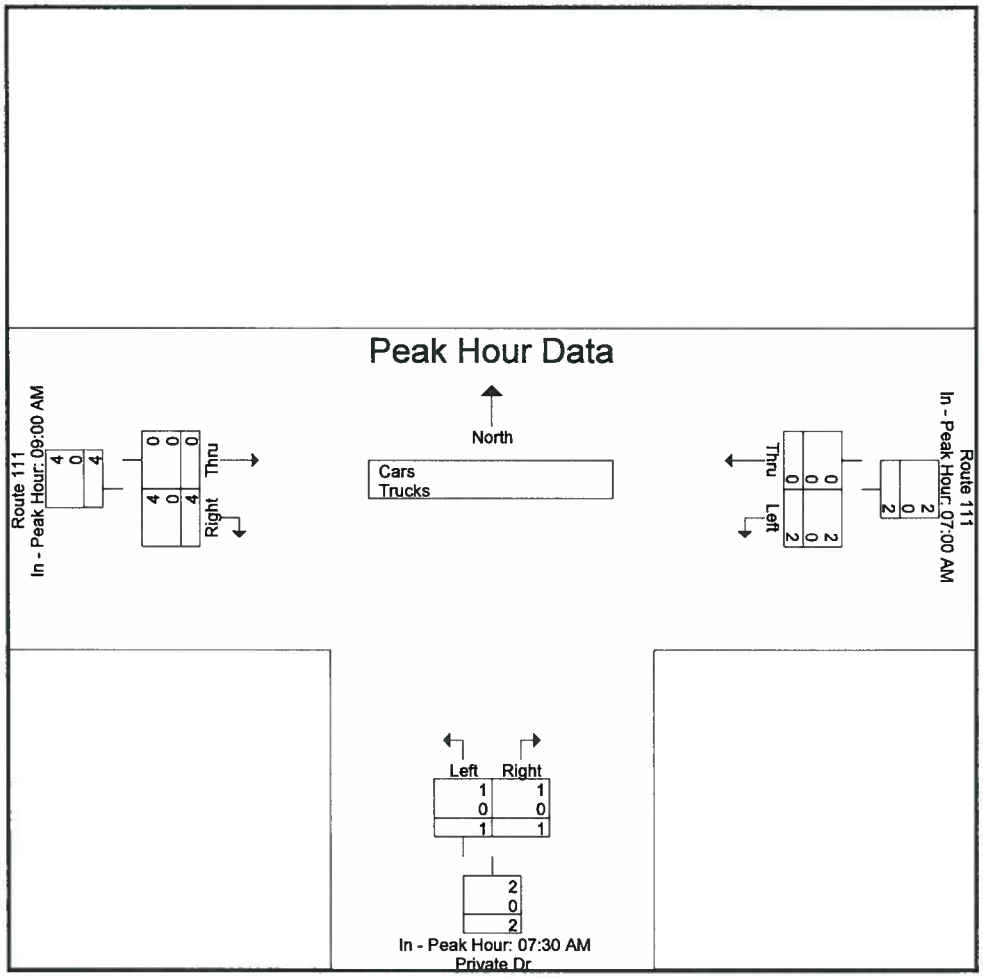

Peak Hour Analysis From 10:00 AM to 01:45 PM - Peak 1 of 1
Peak Hour for Entire Intersection Begins at 10:00 AM

10:00 AM	0	0	0	0	1	1	0	0	0	1
10:15 AM	**2**	0	**2**	**1**	1	2	0	**2**	**2**	**6**
10:30 AM	0	0	0	1	**2**	**3**	0	2	2	5
10:45 AM	0	0	0	1	1	2	0	1	1	3
Total Volume	2	0	2	3	5	8	0	5	5	15
% App. Total	100	0		37.5	62.5		0	100		
PHF	.250	.000	.250	.750	.625	.667	.000	.625	.625	.625
Cars	2	0	2	3	5	8	0	5	5	15
% Cars	100	0	100	100	100	100	0	100	100	100
Trucks	0	0	0	0	0	0	0	0	0	0
% Trucks	0	0	0	0	0	0	0	0	0	0

Accurate Counts
978-664-2565

N/S Street : Private Driveway
E/W Street : Route 111
City/State : Acton, MA
Weather : Clear

File Name : 11810002
Site Code : 11810002
Start Date : 10/17/2012
Page No : 5

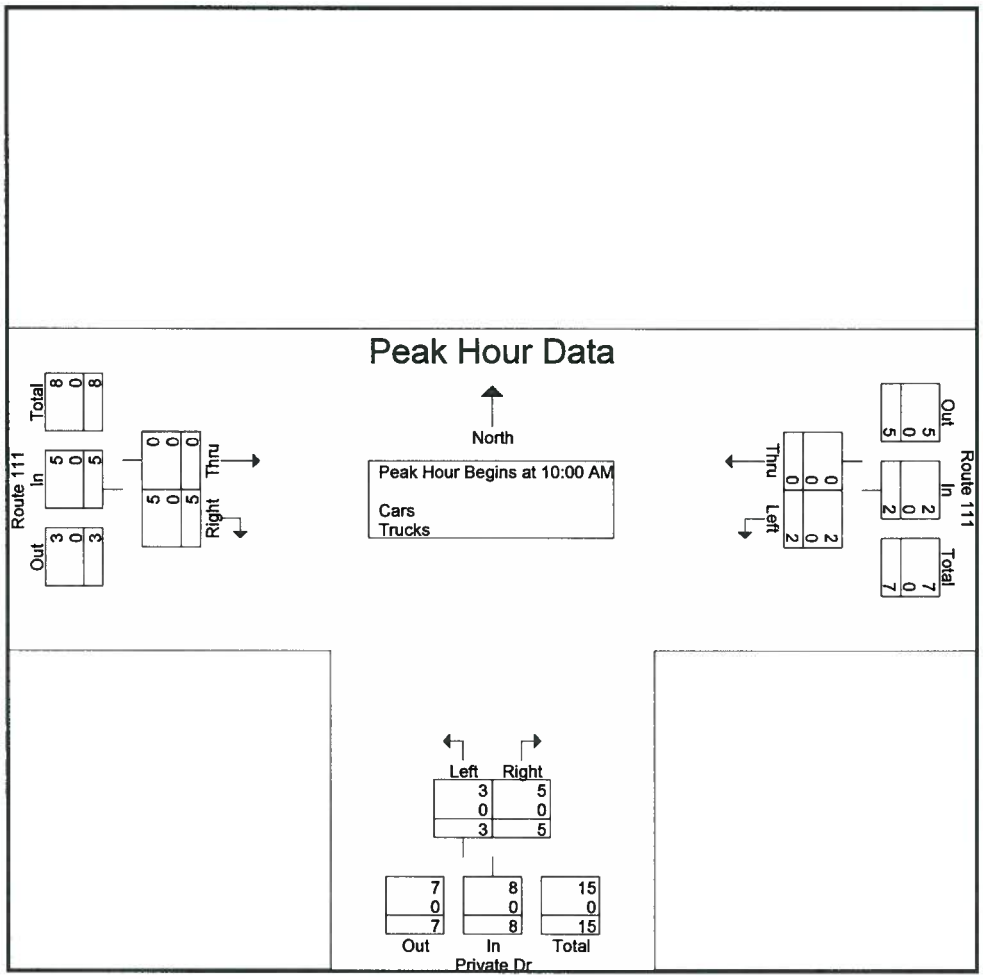

Peak Hour Analysis From 10:00 AM to 01:45 PM - Peak 1 of 1
Peak Hour for Each Approach Begins at:

	10:00 AM			10:00 AM			10:30 AM		
+0 mins.	0	0	0	0	1	1	0	2	2
+15 mins.	**2**	0	**2**	**1**	1	2	0	1	1
+30 mins.	0	0	0	1	**2**	**3**	0	0	0
+45 mins.	0	0	0	1	1	2	0	**3**	**3**
Total Volume	2	0	2	3	5	8	0	6	6
% App. Total	100	0		37.5	62.5		0	100	
PHF	.250	.000	.250	.750	.625	.667	.000	.500	.500
Cars	2	0	2	3	5	8	0	6	6
% Cars	100	0	100	100	100	100	0	100	100
Trucks	0	0	0	0	0	0	0	0	0
% Trucks	0	0	0	0	0	0	0	0	0

Accurate Counts
978-664-2565

N/S Street : Private Driveway
E/W Street : Route 111
City/State : Acton, MA
Weather : Clear

File Name : 11810002
Site Code : 11810002
Start Date : 10/17/2012
Page No : 6

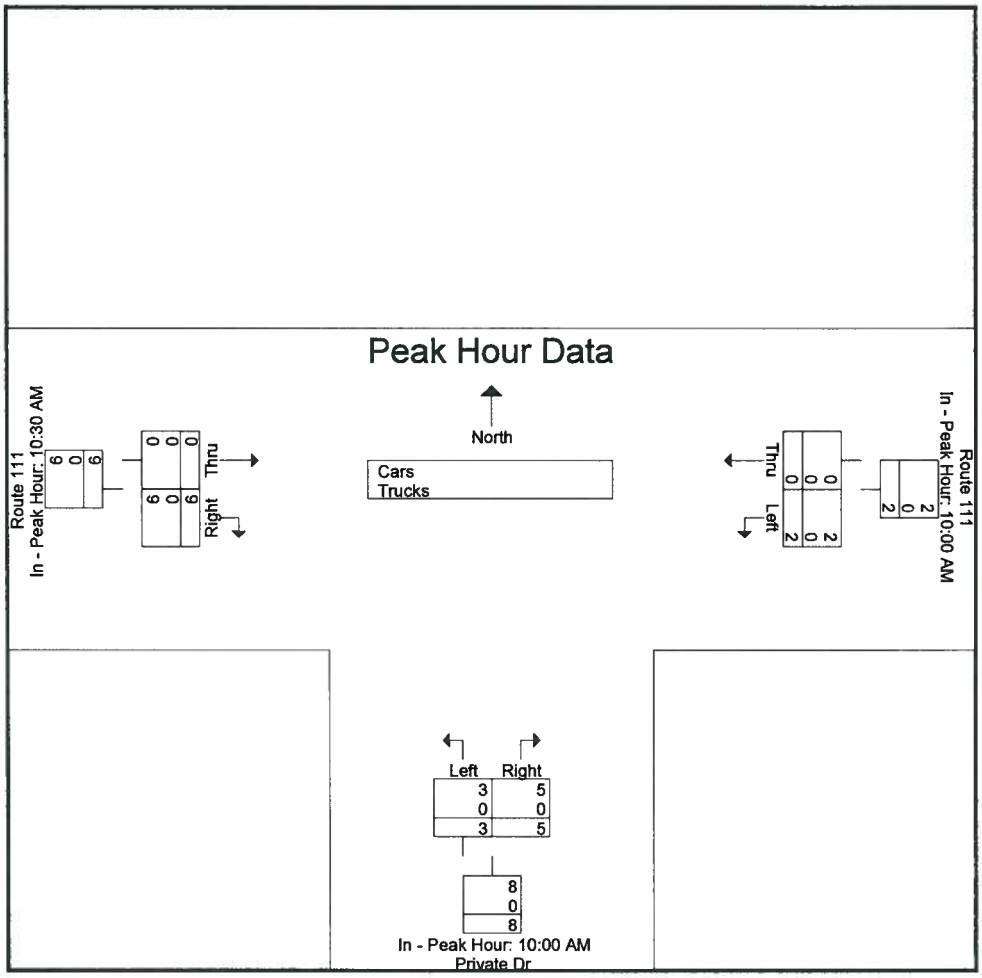

Peak Hour Analysis From 02:00 PM to 06:45 PM - Peak 1 of 1
Peak Hour for Entire Intersection Begins at 02:00 PM

02:00 PM	0	0	0	**2**	0	**2**	0	**1**	**1**	**3**
02:15 PM	0	0	0	1	0	1	0	1	1	2
02:30 PM	0	0	0	0	0	0	0	1	1	1
02:45 PM	**1**	0	**1**	0	**1**	1	0	0	0	2
Total Volume	1	0	1	3	1	4	0	3	3	8
% App. Total	100	0		75	25		0	100		
PHF	.250	.000	.250	.375	.250	.500	.000	.750	.750	.667
Cars	1	0	1	3	1	4	0	3	3	8
% Cars	100	0	100	100	100	100	0	100	100	100
Trucks	0	0	0	0	0	0	0	0	0	0
% Trucks	0	0	0	0	0	0	0	0	0	0

Accurate Counts
978-664-2565

N/S Street : Private Driveway
/W Street : Route 111
ity/State : Acton, MA
Weather : Clear

File Name : 11810002
Site Code : 11810002
Start Date : 10/17/2012
Page No : 7

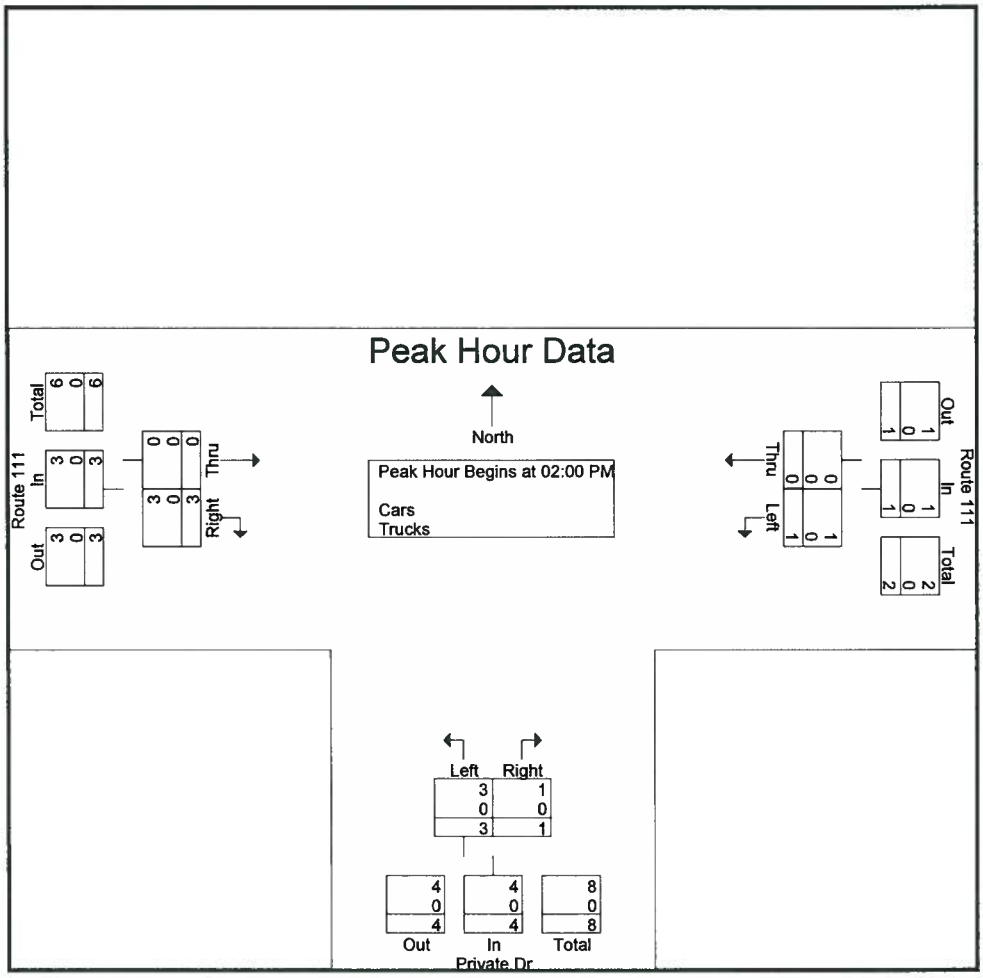

Peak Hour Analysis From 02:00 PM to 06:45 PM - Peak 1 of 1
Peak Hour for Each Approach Begins at:

	02:00 PM			02:00 PM			02:00 PM		
+0 mins.	0	0	0	**2**	0	**2**	0	**1**	**1**
+15 mins.	0	0	0	1	0	1	0	1	1
+30 mins.	0	0	0	0	0	0	0	1	1
+45 mins.	**1**	0	**1**	0	**1**	1	0	0	0
Total Volume	1	0	1	3	1	4	0	3	3
% App. Total	100	0		75	25		0	100	
PHF	.250	.000	.250	.375	.250	.500	.000	.750	.750
Cars	1	0	1	3	1	4	0	3	3
% Cars	100	0	100	100	100	100	0	100	100
Trucks	0	0	0	0	0	0	0	0	0
% Trucks	0	0	0	0	0	0	0	0	0

Accurate Counts
978-664-2565

N/S Street : Private Driveway
E/W Street : Route 111
City/State : Acton, MA
Weather : Clear

File Name : 11810002
Site Code : 11810002
Start Date : 10/17/2012
Page No : 8

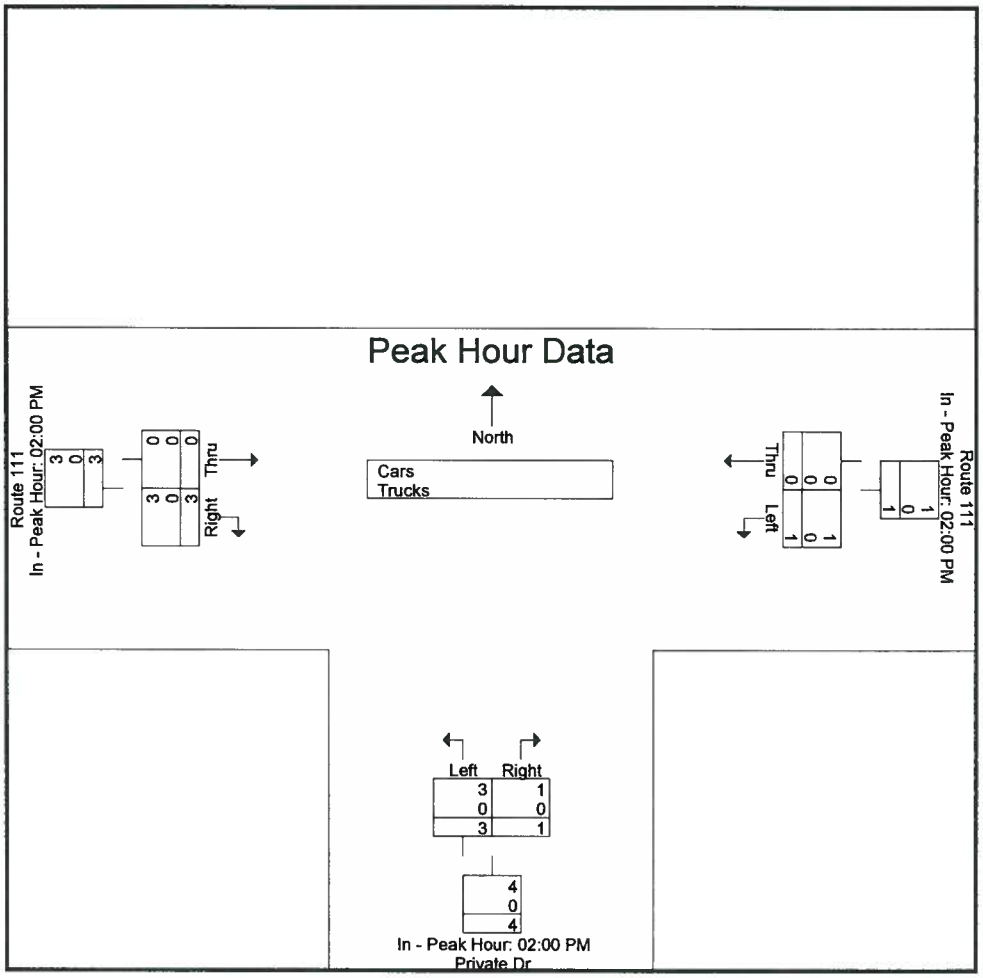

Accurate Counts
978-664-2565

N/S Street : Private Driveway
E/W Street : Route 111
City/State : Acton, MA
Weather : Clear

File Name : 11810002
Site Code : 11810002
Start Date : 10/17/2012
Page No : 1

Groups Printed- Bikes Peds

	Route 111 From East			Private Dr From South			Route 111 From West					
Start Time	Left	Thru	Peds	Left	Right	Peds	Thru	Right	Peds	Exclu. Total	Inclu. Total	Int. Total
07:00 AM	0	0	0	0	0	2	0	0	0	2	0	2
07:15 AM	0	0	0	0	0	0	0	0	0	0	0	0
07:30 AM	0	0	0	0	0	1	0	0	0	1	0	1
07:45 AM	0	0	0	0	0	0	0	0	0	0	0	0
Total	0	0	0	0	0	3	0	0	0	3	0	3
08:00 AM	0	0	0	0	0	0	0	0	0	0	0	0
08:15 AM	0	0	0	0	0	0	0	0	0	0	0	0
08:30 AM	0	0	0	0	0	0	0	0	0	0	0	0
08:45 AM	0	0	0	0	0	0	0	0	0	0	0	0
Total	0	0	0	0	0	0	0	0	0	0	0	0
09:00 AM	0	0	0	0	0	0	0	0	0	0	0	0
09:15 AM	0	0	0	0	0	0	0	0	0	0	0	0
09:30 AM	0	0	0	0	0	0	0	0	0	0	0	0
09:45 AM	0	0	0	0	0	0	0	0	0	0	0	0
Total	0	0	0	0	0	0	0	0	0	0	0	0
10:00 AM	0	0	0	0	0	0	1	0	0	0	1	1
10:15 AM	0	0	0	0	0	0	0	0	0	0	0	0
10:30 AM	0	0	0	0	0	0	0	0	0	0	0	0
10:45 AM	0	0	0	0	0	0	0	0	0	0	0	0
Total	0	0	0	0	0	0	1	0	0	0	1	1
11:00 AM	0	0	0	0	0	0	0	0	0	0	0	0
11:15 AM	0	0	0	0	0	0	0	0	0	0	0	0
11:30 AM	0	0	0	0	0	0	0	0	0	0	0	0
11:45 AM	0	0	0	0	0	0	0	0	0	0	0	0
Total	0	0	0	0	0	0	0	0	0	0	0	0
12:00 PM	0	0	0	0	0	0	0	0	0	0	0	0
12:15 PM	0	0	0	0	0	0	0	0	0	0	0	0
12:30 PM	0	0	0	0	0	0	0	0	0	0	0	0
12:45 PM	0	0	0	0	0	0	0	0	0	0	0	0
Total	0	0	0	0	0	0	0	0	0	0	0	0
01:00 PM	0	0	0	0	0	0	0	0	0	0	0	0
01:15 PM	0	0	0	0	0	0	0	0	0	0	0	0
01:30 PM	0	0	0	0	0	0	0	0	0	0	0	0
01:45 PM	0	0	0	0	0	0	0	0	0	0	0	0
Total	0	0	0	0	0	0	0	0	0	0	0	0
02:00 PM	0	0	0	0	0	0	0	0	0	0	0	0
02:15 PM	0	0	0	0	0	0	0	0	0	0	0	0
02:30 PM	0	0	0	0	0	0	0	0	0	0	0	0
02:45 PM	0	0	0	0	0	0	0	0	0	0	0	0
Total	0	0	0	0	0	0	0	0	0	0	0	0
03:00 PM	0	0	0	0	0	0	0	0	0	0	0	0
03:15 PM	0	0	0	0	0	0	0	0	0	0	0	0
03:30 PM	0	0	0	0	0	0	0	0	0	0	0	0
03:45 PM	0	0	0	0	0	0	0	0	0	0	0	0
Total	0	0	0	0	0	0	0	0	0	0	0	0
04:00 PM	0	0	0	0	0	0	0	0	0	0	0	0
04:15 PM	0	0	0	0	0	0	0	0	0	0	0	0
04:30 PM	0	0	0	0	0	0	0	0	0	0	0	0
04:45 PM	0	0	0	0	0	0	0	0	0	0	0	0
Total	0	0	0	0	0	0	0	0	0	0	0	0
05:00 PM	0	0	0	0	0	0	0	0	0	0	0	0
05:15 PM	0	0	0	0	0	0	0	0	0	0	0	0
05:30 PM	0	0	0	0	0	0	0	0	0	0	0	0
05:45 PM	0	0	0	0	0	0	0	0	0	0	0	0
Total	0	0	0	0	0	0	0	0	0	0	0	0

Accurate Counts
978-664-2565

N/S Street : Private Driveway
E/W Street : Route 111
City/State : Acton, MA
Weather : Clear

File Name : 11810002
Site Code : 11810002
Start Date : 10/17/2012
Page No : 2

Groups Printed- Bikes Peds

	Route 111 From East			Private Dr From South			Route 111 From West					
Start Time	Left	Thru	Peds	Left	Right	Peds	Thru	Right	Peds	Exclu. Total	Inclu. Total	Int. Total
06:00 PM	0	0	0	0	0	0	0	0	0	0	0	0
06:15 PM	0	0	0	0	0	0	0	0	0	0	0	0
06:30 PM	0	0	0	0	0	0	0	0	0	0	0	0
06:45 PM	0	0	0	0	0	0	0	0	0	0	0	0
Total	0	0	0	0	0	0	0	0	0	0	0	0
Grand Total	0	0	0	0	0	3	1	0	0	3	1	4
Apprch %	0	0		0	0		100	0				
Total %	0	0		0	0		100	0		75	25	

	Route 111 From East			Private Dr From South			Route 111 From West			
Start Time	Left	Thru	App. Total	Left	Right	App. Total	Thru	Right	App. Total	Int. Total
Peak Hour Analysis From 07:00 AM to 09:45 AM - Peak 1 of 1										
Peak Hour for Entire Intersection Begins at 07:00 AM										
07:00 AM	0	0	0	0	0	0	0	0	0	0
07:15 AM	0	0	0	0	0	0	0	0	0	0
07:30 AM	0	0	0	0	0	0	0	0	0	0
07:45 AM	0	0	0	0	0	0	0	0	0	0
Total Volume	0	0	0	0	0	0	0	0	0	0
% App. Total	0	0		0	0		0	0		
PHF	.000	.000	.000	.000	.000	.000	.000	.000	.000	.000

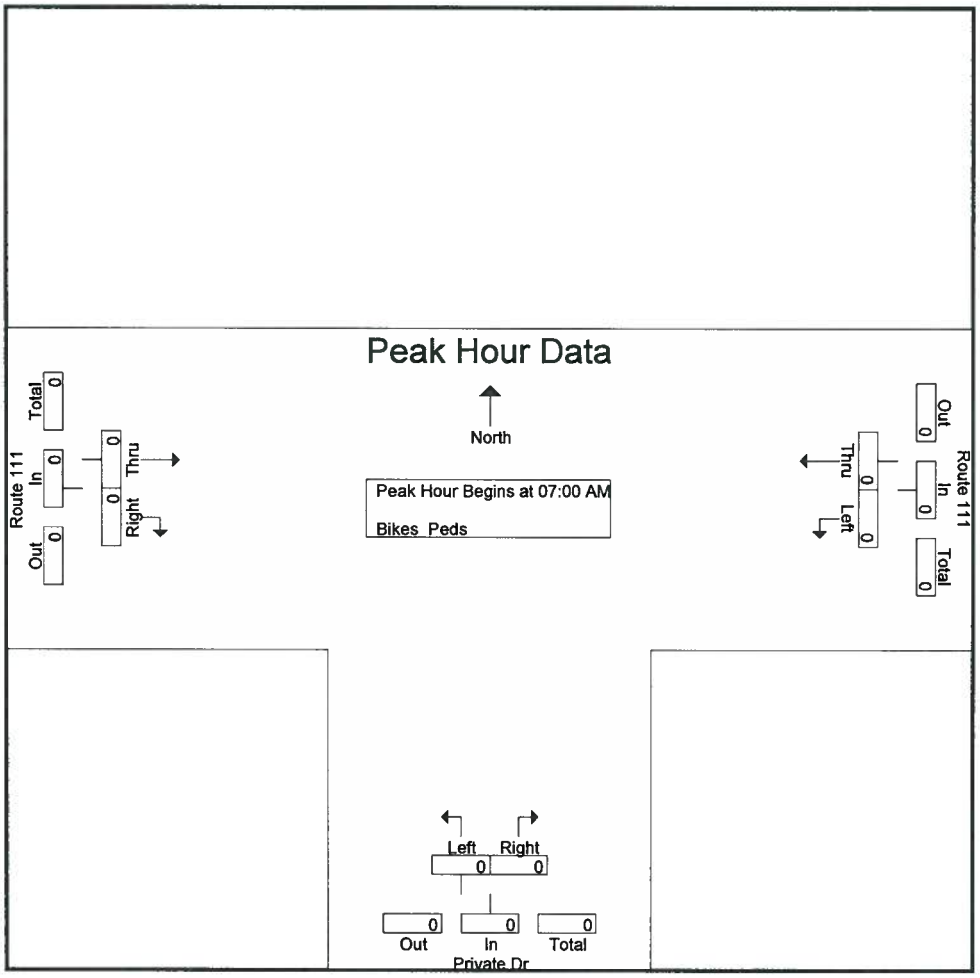

Accurate Counts
978-664-2565

N/S Street : Private Driveway
E/W Street : Route 111
City/State : Acton, MA
Weather : Clear

File Name : 11810002
Site Code : 11810002
Start Date : 10/17/2012
Page No : 3

	Route 111 From East			Private Dr From South			Route 111 From West			
Start Time	Left	Thru	App. Total	Left	Right	App. Total	Thru	Right	App. Total	Int. Total
Peak Hour Analysis From 07:00 AM to 09:45 AM - Peak 1 of 1										
Peak Hour for Each Approach Begins at:										
	07:00 AM			07:00 AM			07:00 AM			
+0 mins.	0	0	0	0	0	0	0	0	0	
+15 mins.	0	0	0	0	0	0	0	0	0	
+30 mins.	0	0	0	0	0	0	0	0	0	
+45 mins.	0	0	0	0	0	0	0	0	0	
Total Volume	0	0	0	0	0	0	0	0	0	
% App. Total	0	0		0	0		0	0		
PHF	.000	.000	.000	.000	.000	.000	.000	.000	.000	

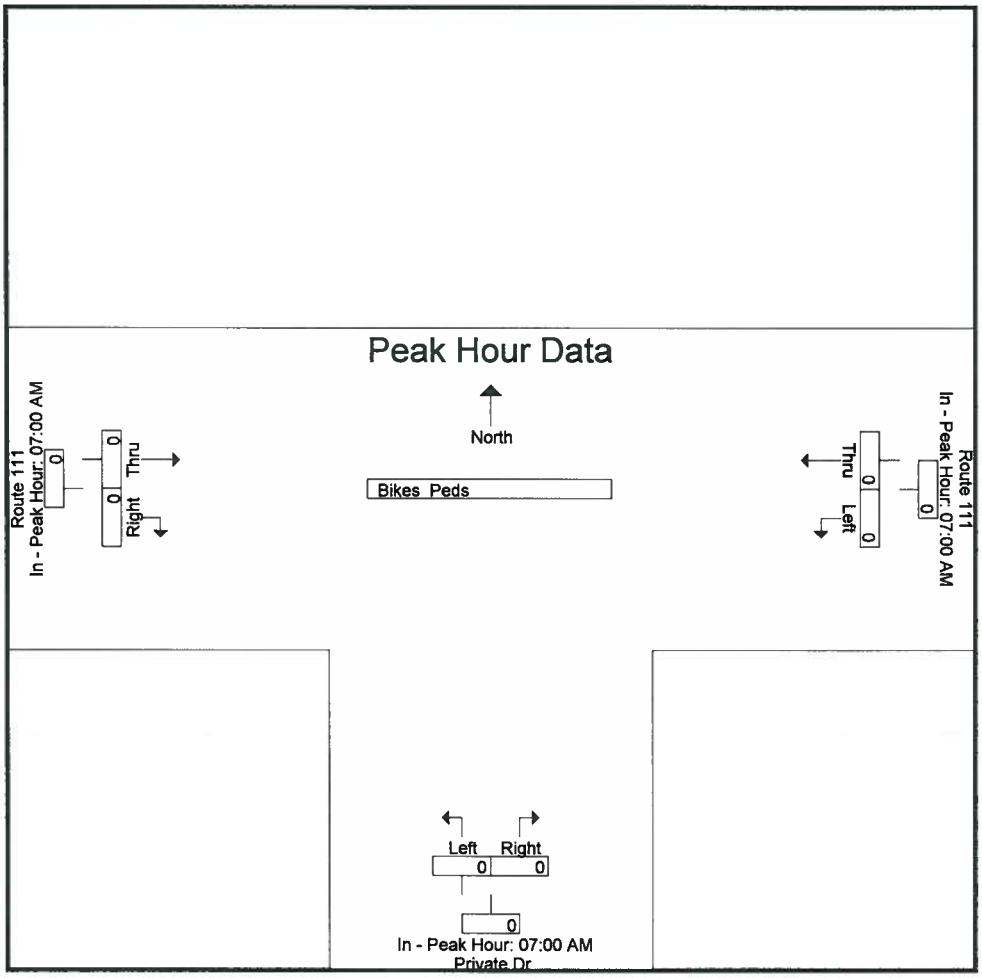

Peak Hour Analysis From 10:00 AM to 01:45 PM - Peak 1 of 1										
Peak Hour for Entire Intersection Begins at 10:00 AM										
10:00 AM	0	0	0	0	0	0	1	0	1	1
10:15 AM	0	0	0	0	0	0	0	0	0	0
10:30 AM	0	0	0	0	0	0	0	0	0	0
10:45 AM	0	0	0	0	0	0	0	0	0	0
Total Volume	0	0	0	0	0	0	1	0	1	1
% App. Total	0	0		0	0		100	0		
PHF	.000	.000	.000	.000	.000	.000	.250	.000	.250	.250

Accurate Counts
978-664-2565

N/S Street : Private Driveway
E/W Street : Route 111
City/State : Acton, MA
Weather : Clear

File Name : 11810002
Site Code : 11810002
Start Date : 10/17/2012
Page No : 4

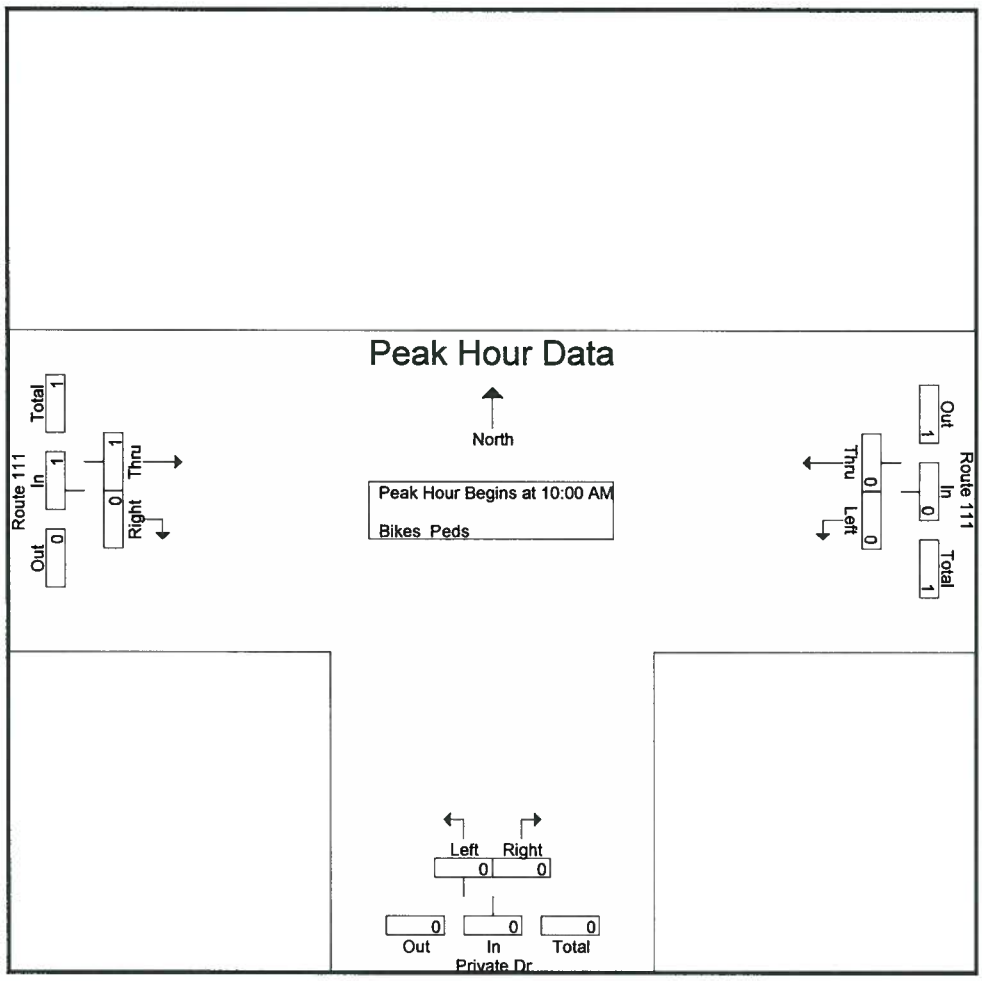

Peak Hour Analysis From 10:00 AM to 01:45 PM - Peak 1 of 1
Peak Hour for Each Approach Begins at:

	10:00 AM			10:00 AM			10:00 AM		
+0 mins.	0	0	0	0	0	0	**1**	0	**1**
+15 mins.	0	0	0	0	0	0	0	0	0
+30 mins.	0	0	0	0	0	0	0	0	0
+45 mins.	0	0	0	0	0	0	0	0	0
Total Volume	0	0	0	0	0	0	1	0	1
% App. Total	0	0		0	0		100	0	
PHF	.000	.000	.000	.000	.000	.000	.250	.000	.250

Accurate Counts
978-664-2565

N/S Street : Private Driveway
E/W Street : Route 111
City/State : Acton, MA
Weather : Clear

File Name : 11810002
Site Code : 11810002
Start Date : 10/17/2012
Page No : 5

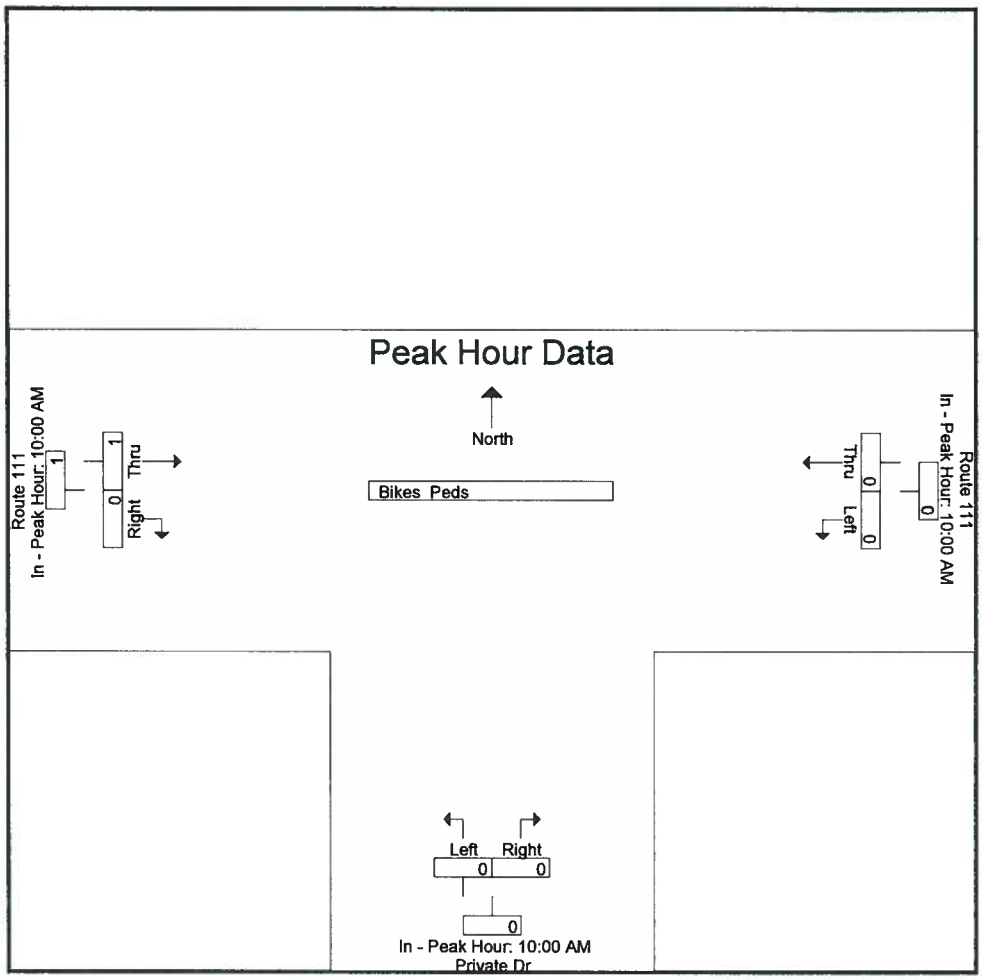

Peak Hour Analysis From 02:00 PM to 06:45 PM - Peak 1 of 1
Peak Hour for Entire Intersection Begins at 02:00 PM

02:00 PM	0	0	0	0	0	0	0	0	0	0
02:15 PM	0	0	0	0	0	0	0	0	0	0
02:30 PM	0	0	0	0	0	0	0	0	0	0
02:45 PM	0	0	0	0	0	0	0	0	0	0
Total Volume	0	0	0	0	0	0	0	0	0	0
% App. Total	0	0		0	0		0	0		
PHF	.000	.000	.000	.000	.000	.000	.000	.000	.000	.000

Accurate Counts
978-664-2565

N/S Street : Private Driveway
E/W Street : Route 111
City/State : Acton, MA
Weather : Clear

File Name : 11810002
Site Code : 11810002
Start Date : 10/17/2012
Page No : 6

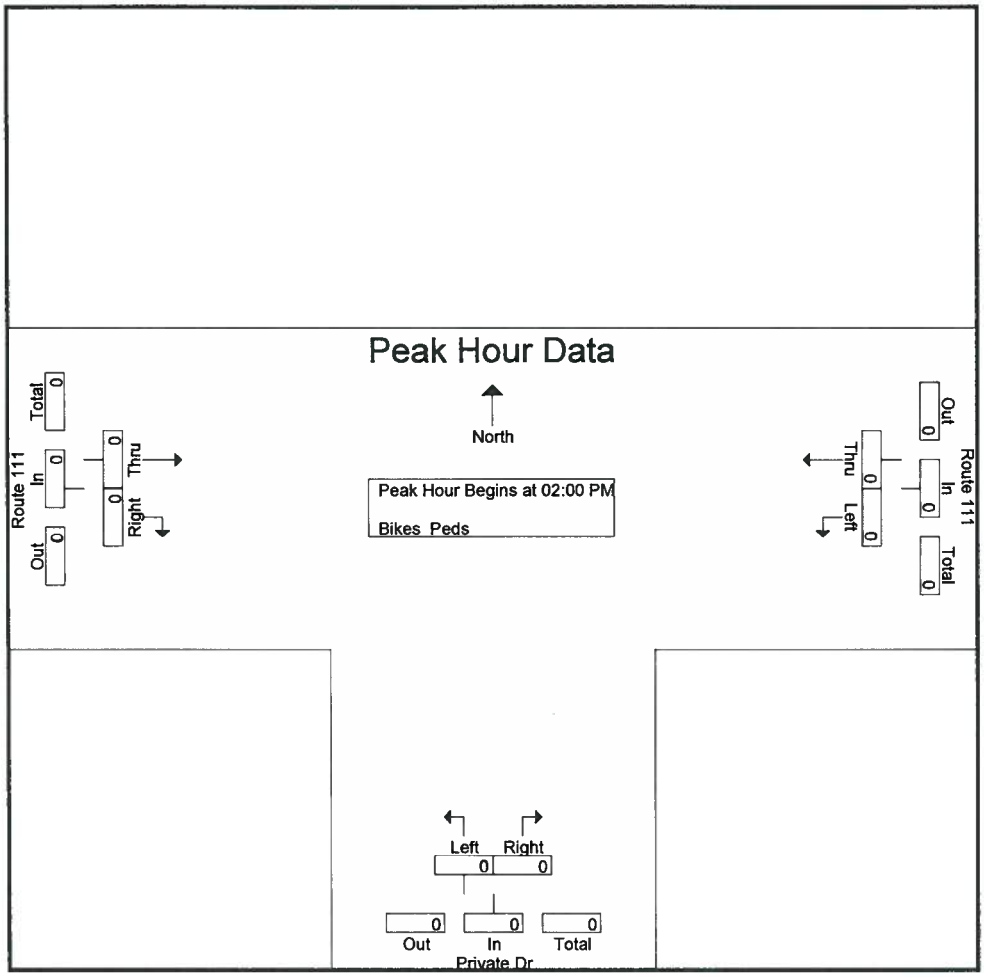

Peak Hour Analysis From 02:00 PM to 06:45 PM - Peak 1 of 1
Peak Hour for Each Approach Begins at:

	02:00 PM			02:00 PM			02:00 PM		
+0 mins.	0	0	0	0	0	0	0	0	0
+15 mins.	0	0	0	0	0	0	0	0	0
+30 mins.	0	0	0	0	0	0	0	0	0
+45 mins.	0	0	0	0	0	0	0	0	0
Total Volume	0	0	0	0	0	0	0	0	0
% App. Total	0	0		0	0		0	0	
PHF	.000	.000	.000	.000	.000	.000	.000	.000	.000

Accurate Counts
978-664-2565

N/S Street : Private Driveway
E/W Street : Route 111
City/State : Acton, MA
Weather : Clear

File Name : 11810002
Site Code : 11810002
Start Date : 10/17/2012
Page No : 7

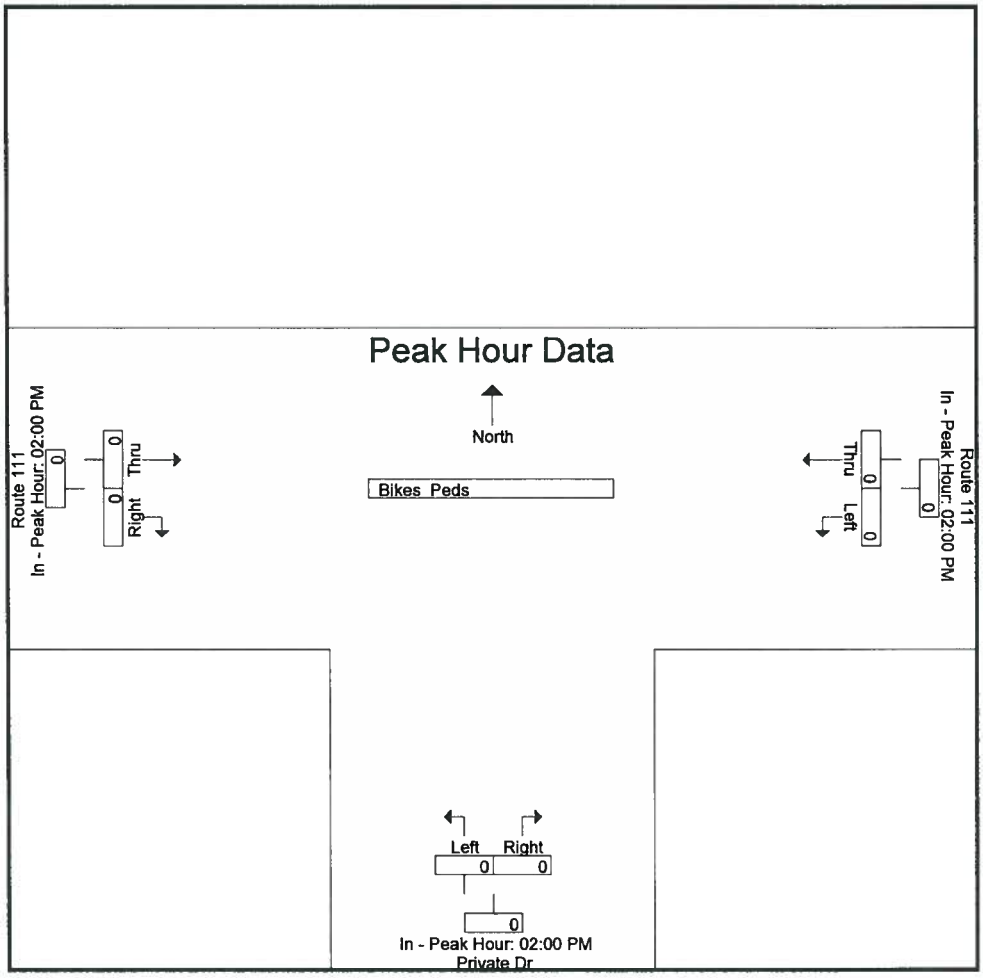

Accurate Counts
978-664-2565

N/S Street : Acton Plaza / TD Bank Dwy
E/W Street : Route 111
City/State : Acton, MA
Weather : Clear

File Name : 118100S1
Site Code : 11810001
Start Date : 10/20/2012
Page No : 1

Groups Printed- Cars - Trucks

	Acton Plaza From North			Rte 111 From East			TD Bank Drwy From South			Rte111 From West			
Start Time	Left	Thru	Right	Left	Thru	Right	Left	Thru	Right	Left	Thru	Right	Int. Total
11:00 AM	30	0	65	1	102	36	2	2	0	45	82	0	365
11:15 AM	26	0	47	1	74	40	0	3	1	56	58	0	306
11:30 AM	17	0	72	1	96	41	0	0	2	53	65	0	347
11:45 AM	31	0	55	1	81	49	1	0	1	50	74	1	344
Total	104	0	239	4	353	166	3	5	4	204	279	1	1362
12:00 PM	30	1	70	1	83	42	0	2	2	40	72	0	343
12:15 PM	31	0	56	2	80	33	3	1	1	51	99	0	357
12:30 PM	33	1	71	0	76	36	1	1	1	47	75	0	342
12:45 PM	21	0	62	0	79	26	1	0	2	29	71	0	291
Total	115	2	259	3	318	137	5	4	6	167	317	0	1333
01:00 PM	31	0	54	2	84	32	1	1	1	46	85	0	337
01:15 PM	24	0	49	0	76	33	1	1	1	47	87	0	319
01:30 PM	24	1	59	0	78	38	0	1	0	46	58	0	305
01:45 PM	18	0	46	1	97	39	0	1	0	39	68	0	309
Total	97	1	208	3	335	142	2	4	2	178	298	0	1270
Grand Total	316	3	706	10	1006	445	10	13	12	549	894	1	3965
Apprch %	30.8	0.3	68.9	0.7	68.9	30.5	28.6	37.1	34.3	38	61.9	0.1	
Total %	8	0.1	17.8	0.3	25.4	11.2	0.3	0.3	0.3	13.8	22.5	0	
Cars	316	3	705	10	1000	444	10	13	12	549	891	1	3954
% Cars	100	100	99.9	100	99.4	99.8	100	100	100	100	99.7	100	99.7
Trucks	0	0	1	0	6	1	0	0	0	0	3	0	11
% Trucks	0	0	0.1	0	0.6	0.2	0	0	0	0	0.3	0	0.3

	Acton Plaza From North				Rte 111 From East				TD Bank Drwy From South				Rte111 From West				
Start Time	Left	Thru	Right	App. Total	Left	Thru	Right	App. Total	Left	Thru	Right	App. Total	Left	Thru	Right	App. Total	Int. Total
Peak Hour Analysis From 11:00 AM to 01:45 PM - Peak 1 of 1																	
Peak Hour for Entire Intersection Begins at 11:30 AM																	
11:30 AM	17	0	72	89	1	96	41	138	0	0	2	2	53	65	0	118	347
11:45 AM	31	0	55	86	1	81	49	131	1	0	1	2	50	74	1	125	344
12:00 PM	30	1	70	101	1	83	42	126	0	2	2	4	40	72	0	112	343
12:15 PM	31	0	56	87	2	80	33	115	3	1	1	5	51	99	0	150	357
Total Volume	109	1	253	363	5	340	165	510	4	3	6	13	194	310	1	505	1391
% App. Total	30	0.3	69.7		1	66.7	32.4		30.8	23.1	46.2		38.4	61.4	0.2		
PHF	.879	.250	.878	.899	.625	.885	.842	.924	.333	.375	.750	.650	.915	.783	.250	.842	.974
Cars	109	1	252	362	5	339	165	509	4	3	6	13	194	308	1	503	1387
% Cars	100	100	99.6	99.7	100	99.7	100	99.8	100	100	100	100	100	99.4	100	99.6	99.7
Trucks	0	0	1	1	0	1	0	1	0	0	0	0	0	2	0	2	4
% Trucks	0	0	0.4	0.3	0	0.3	0	0.2	0	0	0	0	0	0.6	0	0.4	0.3

Accurate Counts
978-664-2565

N/S Street : Acton Plaza / TD Bank Dwy
E/W Street : Route 111
City/State : Acton, MA
Weather : Clear

File Name : 118100S1
Site Code : 11810001
Start Date : 10/20/2012
Page No : 2

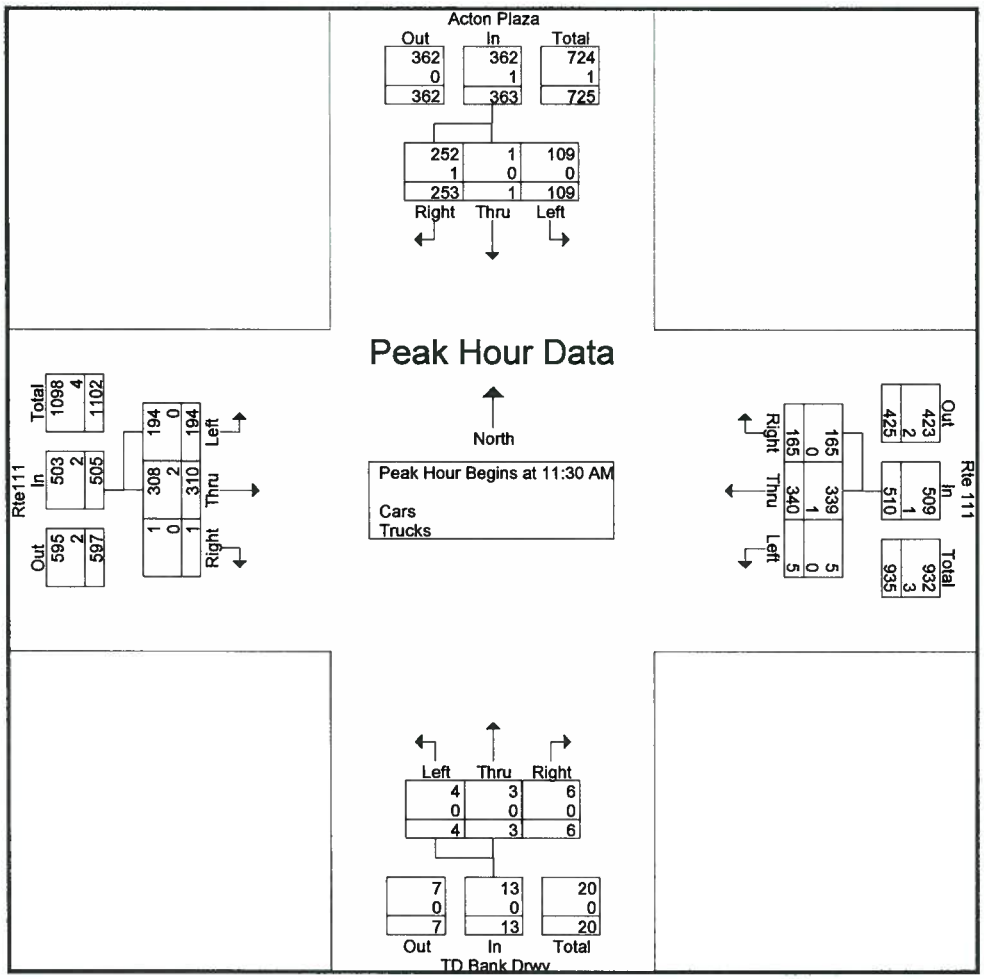

Peak Hour Analysis From 11:00 AM to 01:45 PM - Peak 1 of 1
Peak Hour for Each Approach Begins at:

	11:45 AM				11:00 AM				12:00 PM				11:45 AM			
+0 mins.	31	0	55	86	**1**	**102**	36	**139**	0	**2**	**2**	4	50	74	**1**	125
+15 mins.	30	**1**	70	101	1	74	40	115	**3**	1	1	**5**	40	72	0	112
+30 mins.	31	0	56	87	1	96	41	138	1	1	1	3	**51**	**99**	0	**150**
+45 mins.	**33**	1	**71**	**105**	1	81	**49**	131	1	0	2	3	47	75	0	122
Total Volume	125	2	252	379	4	353	166	523	5	4	6	15	188	320	1	509
% App. Total	33	0.5	66.5		0.8	67.5	31.7		33.3	26.7	40		36.9	62.9	0.2	
PHF	.947	.500	.887	.902	1.000	.865	.847	.941	.417	.500	.750	.750	.922	.808	.250	.848
Cars	125	2	251	378	4	348	165	517	5	4	6	15	188	319	1	508
% Cars	100	100	99.6	99.7	100	98.6	99.4	98.9	100	100	100	100	100	99.7	100	99.8
Trucks	0	0	1	1	0	5	1	6	0	0	0	0	0	1	0	1
% Trucks	0	0	0.4	0.3	0	1.4	0.6	1.1	0	0	0	0	0	0.3	0	0.2

Accurate Counts
978-664-2565

N/S Street : Acton Plaza / TD Bank Dwy
/W Street : Route 111
ity/State : Acton, MA
Weather : Clear

File Name : 118100S1
Site Code : 11810001
Start Date : 10/20/2012
Page No : 3

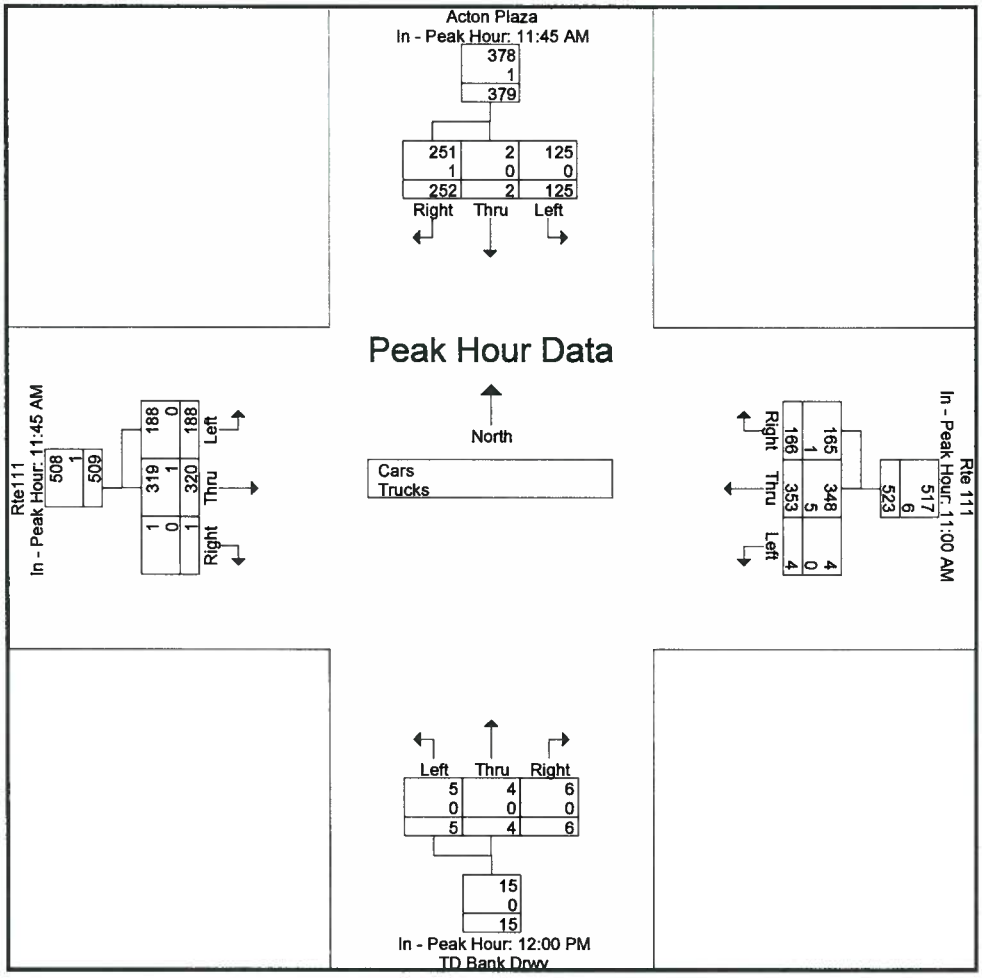

Accurate Counts
978-664-2565

N/S Street : Acton Plaza / TD Bank Dwy
E/W Street : Route 111
City/State : Acton, MA
Weather : Clear

File Name : 118100S1
Site Code : 11810001
Start Date : 10/20/2012
Page No : 1

Groups Printed- Bikes Peds

	Acton Plaza From North				Rte 111 From East				TD Bank Drwy From South				Rte111 From West						
Start Time	Left	Thru	Right	Peds	Left	Thru	Right	Peds	Left	Thru	Right	Peds	Left	Thru	Right	Peds	Exclu. Total	Inclu. Total	Int. Total
11:00 AM	0	0	0	0	0	0	0	1	0	0	0	0	0	0	0	0	1	0	1
11:15 AM	0	0	0	0	0	0	0	0	0	0	0	0	0	0	0	0	0	0	0
11:30 AM	1	0	0	0	0	0	0	1	0	0	0	0	0	0	0	0	1	1	2
11:45 AM	0	0	0	0	0	0	0	1	0	0	0	0	0	0	0	0	1	0	1
Total	1	0	0	0	0	0	0	3	0	0	0	0	0	0	0	0	3	1	4
12:00 PM	0	0	0	0	0	0	0	2	0	0	0	0	0	0	0	0	2	0	2
12:15 PM	0	0	0	0	0	0	0	0	0	0	0	0	0	0	0	4	4	0	4
12:30 PM	0	0	0	0	0	1	0	0	0	0	0	0	0	1	0	0	0	2	2
12:45 PM	0	0	0	0	0	0	0	0	0	0	0	0	0	0	0	4	4	0	4
Total	0	0	0	0	0	1	0	2	0	0	0	0	0	1	0	8	10	2	12
01:00 PM	0	0	0	0	0	0	0	0	0	0	0	0	0	0	0	0	0	0	0
01:15 PM	0	0	0	0	0	0	0	0	0	0	0	0	0	0	0	0	0	0	0
01:30 PM	0	0	0	0	0	0	0	0	0	0	0	0	0	0	0	0	0	0	0
01:45 PM	0	0	0	0	0	0	0	0	0	0	0	0	0	0	0	0	0	0	0
Total	0	0	0	0	0	0	0	0	0	0	0	0	0	0	0	0	0	0	0
Grand Total	1	0	0	0	0	1	0	5	0	0	0	0	0	1	0	8	13	3	16
Apprch %	100	0	0		0	100	0		0	0	0		0	100	0				
Total %	33.3	0	0		0	33.3	0		0	0	0		0	33.3	0		81.2	18.8	

	Acton Plaza From North				Rte 111 From East				TD Bank Drwy From South				Rte111 From West				
Start Time	Left	Thru	Right	App. Total	Left	Thru	Right	App. Total	Left	Thru	Right	App. Total	Left	Thru	Right	App. Total	Int. Total
Peak Hour Analysis From 11:00 AM to 01:45 PM - Peak 1 of 1																	
Peak Hour for Entire Intersection Begins at 11:45 AM																	
11:45 AM	0	0	0	0	0	0	0	0	0	0	0	0	0	0	0	0	0
12:00 PM	0	0	0	0	0	0	0	0	0	0	0	0	0	0	0	0	0
12:15 PM	0	0	0	0	0	0	0	0	0	0	0	0	0	0	0	0	0
12:30 PM	0	0	0	0	0	1	0	1	0	0	0	0	0	1	0	1	2
Total Volume	0	0	0	0	0	1	0	1	0	0	0	0	0	1	0	1	2
% App. Total	0	0	0		0	100	0		0	0	0		0	100	0		
PHF	.000	.000	.000	.000	.000	.250	.000	.250	.000	.000	.000	.000	.000	.250	.000	.250	.250

Accurate Counts
978-664-2565

N/S Street : Acton Plaza / TD Bank Dwy
E/W Street : Route 111
City/State : Acton, MA
Weather : Clear

File Name : 118100S1
Site Code : 11810001
Start Date : 10/20/2012
Page No : 2

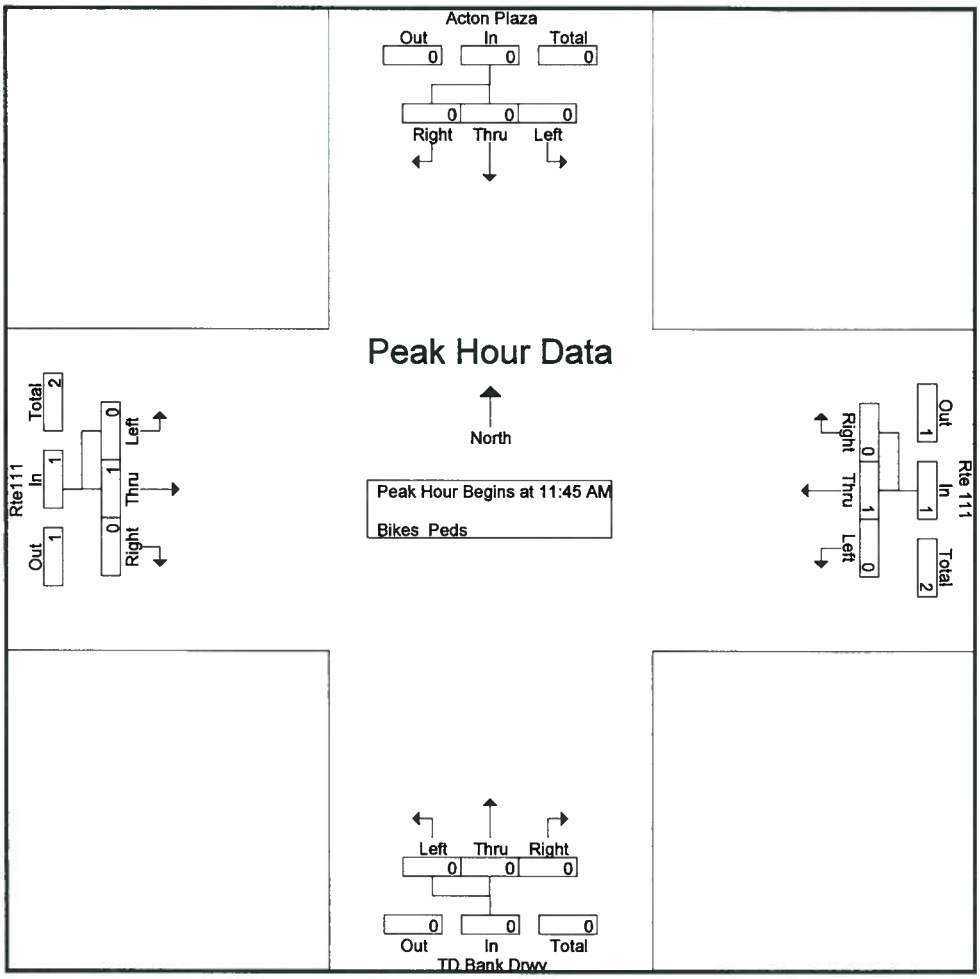

Peak Hour Analysis From 11:00 AM to 01:45 PM - Peak 1 of 1
Peak Hour for Each Approach Begins at:

	11:00 AM				11:45 AM				11:00 AM				11:45 AM			
+0 mins.	0	0	0	0	0	0	0	0	0	0	0	0	0	0	0	0
+15 mins.	0	0	0	0	0	0	0	0	0	0	0	0	0	0	0	0
+30 mins.	1	0	0	1	0	0	0	0	0	0	0	0	0	0	0	0
+45 mins.	0	0	0	0	0	1	0	1	0	0	0	0	0	1	0	1
Total Volume	1	0	0	1	0	1	0	1	0	0	0	0	0	1	0	1
% App. Total	100	0	0		0	100	0		0	0	0		0	100	0	
PHF	.250	.000	.000	.250	.000	.250	.000	.250	.000	.000	.000	.000	.000	.250	.000	.250

Accurate Counts
978-664-2565

N/S Street : Acton Plaza / TD Bank Dwy
E/W Street : Route 111
City/State : Acton, MA
Weather : Clear

File Name : 118100S1
Site Code : 11810001
Start Date : 10/20/2012
Page No : 3

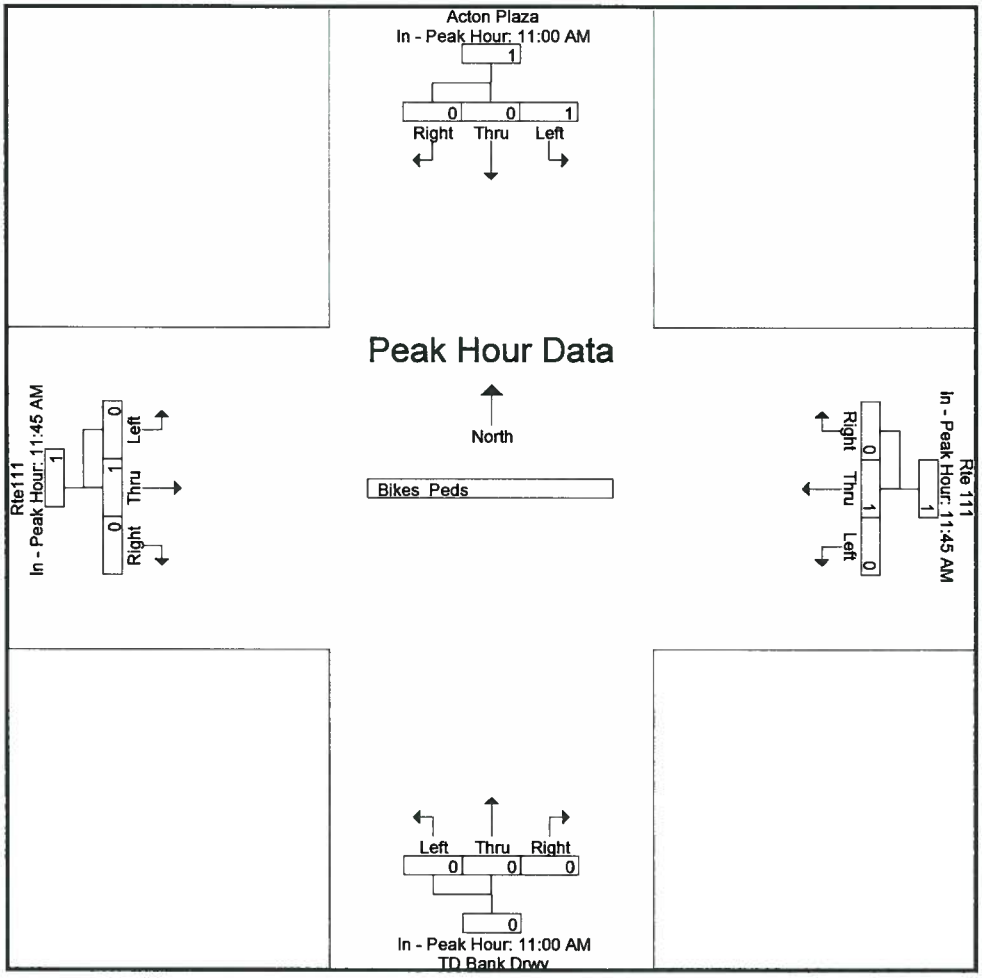

Accurate Counts
978-664-2565

N/S Street : Acton Plaza / TD Bank Dwy
E/W Street : Route 111
City/State : Acton, MA
Weather : Clear

File Name : 118100S1
Site Code : 11810001
Start Date : 10/20/2012
Page No : 1

Groups Printed- TD West DWay

	Acton Plaza From North			Rte 111 From East			TD Bank Drwy From South			Rte111 From West			
Start Time	Left	Thru	Right	Left	Thru	Right	Left	Thru	Right	Left	Thru	Right	Int. Total
11:00 AM	0	0	0	3	0	0	1	0	0	0	0	0	4
11:15 AM	0	0	0	3	0	0	1	0	1	0	0	3	8
11:30 AM	0	0	0	1	0	0	0	0	1	0	0	0	2
11:45 AM	0	0	0	2	0	0	1	0	3	0	0	2	8
Total	0	0	0	9	0	0	3	0	5	0	0	5	22
12:00 PM	0	0	0	4	0	0	0	0	2	0	0	1	7
12:15 PM	0	0	0	1	0	0	2	0	1	1	0	4	9
12:30 PM	0	0	0	5	0	0	2	0	2	0	0	2	11
12:45 PM	0	0	0	0	0	0	1	0	0	0	0	2	3
Total	0	0	0	10	0	0	5	0	5	1	0	9	30
01:00 PM	0	0	0	2	0	0	0	0	1	0	0	3	6
01:15 PM	0	0	0	0	0	0	0	0	1	0	0	4	5
01:30 PM	0	0	0	3	0	0	0	0	3	0	0	1	7
01:45 PM	0	0	0	0	0	0	0	0	3	0	0	0	3
Total	0	0	0	5	0	0	0	0	8	0	0	8	21
Grand Total	0	0	0	24	0	0	8	0	18	1	0	22	73
Apprch %	0	0	0	100	0	0	30.8	0	69.2	4.3	0	95.7	
Total %	0	0	0	32.9	0	0	11	0	24.7	1.4	0	30.1	

	Acton Plaza From North				Rte 111 From East				TD Bank Drwy From South				Rte111 From West				
Start Time	Left	Thru	Right	App. Total	Left	Thru	Right	App. Total	Left	Thru	Right	App. Total	Left	Thru	Right	App. Total	Int. Total
Peak Hour Analysis From 11:00 AM to 01:45 PM - Peak 1 of 1																	
Peak Hour for Entire Intersection Begins at 11:45 AM																	
11:45 AM	0	0	0	0	2	0	0	2	1	0	3	4	0	0	2	2	8
12:00 PM	0	0	0	0	4	0	0	4	0	0	2	2	0	0	1	1	7
12:15 PM	0	0	0	0	1	0	0	1	2	0	1	3	1	0	4	5	9
12:30 PM	0	0	0	0	5	0	0	5	2	0	2	4	0	0	2	2	11
Total Volume	0	0	0	0	12	0	0	12	5	0	8	13	1	0	9	10	35
% App. Total	0	0	0		100	0	0		38.5	0	61.5		10	0	90		
PHF	.000	.000	.000	.000	.600	.000	.000	.600	.625	.000	.667	.813	.250	.000	.563	.500	.795

Accurate Counts
978-664-2565

N/S Street : Acton Plaza / TD Bank Dwy
E/W Street : Route 111
City/State : Acton, MA
Weather : Clear

File Name : 118100S1
Site Code : 11810001
Start Date : 10/20/2012
Page No : 2

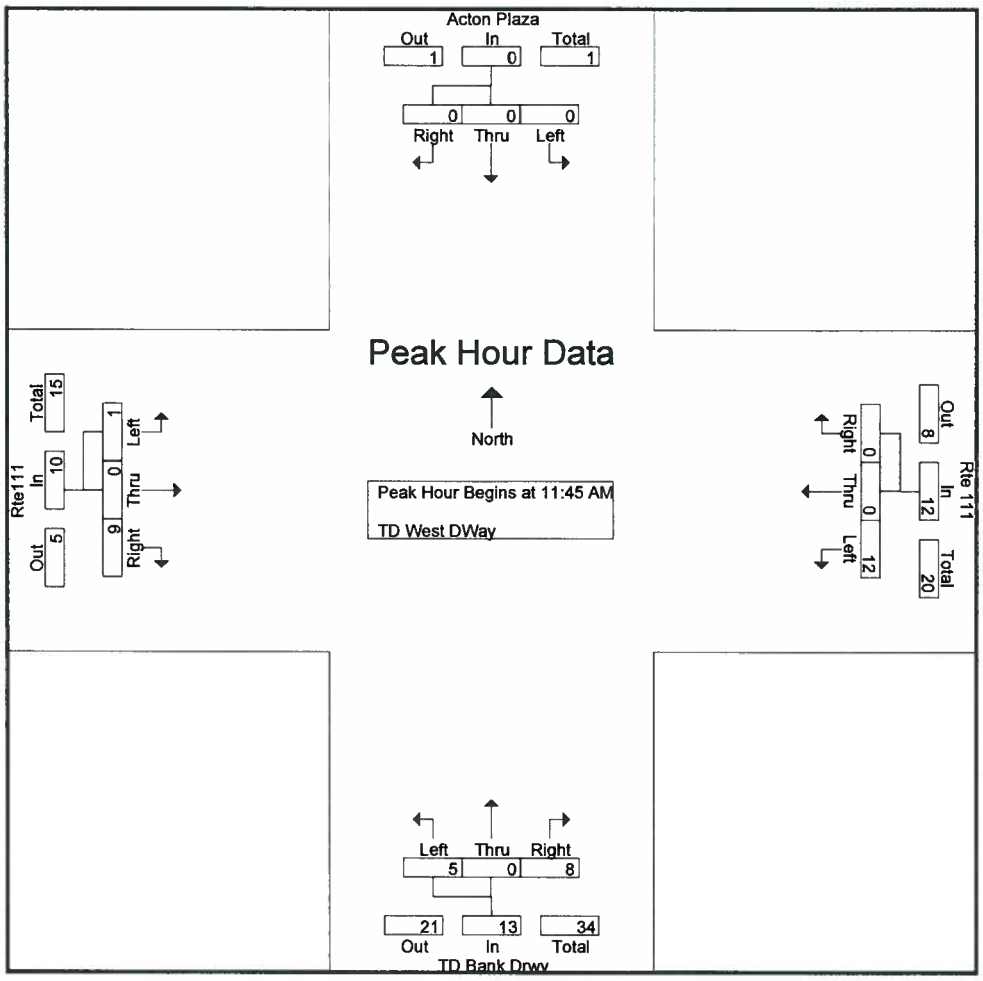

Peak Hour Analysis From 11:00 AM to 01:45 PM - Peak 1 of 1
Peak Hour for Each Approach Begins at:

	11:00 AM				11:45 AM				11:45 AM				12:15 PM			
+0 mins.	0	0	0	0	2	0	0	2	1	0	3	4	1	0	4	5
+15 mins.	0	0	0	0	4	0	0	4	0	0	2	2	0	0	2	2
+30 mins.	0	0	0	0	1	0	0	1	2	0	1	3	0	0	2	2
+45 mins.	0	0	0	0	5	0	0	5	2	0	2	4	0	0	3	3
Total Volume	0	0	0	0	12	0	0	12	5	0	8	13	1	0	11	12
% App. Total	0	0	0		100	0	0		38.5	0	61.5		8.3	0	91.7	
PHF	.000	.000	.000	.000	.600	.000	.000	.600	.625	.000	.667	.813	.250	.000	.688	.600

Accurate Counts
978-664-2565

N/S Street : Acton Plaza / TD Bank Dwy
E/W Street : Route 111
City/State : Acton, MA
Weather : Clear

File Name : 118100S1
Site Code : 11810001
Start Date : 10/20/2012
Page No : 3

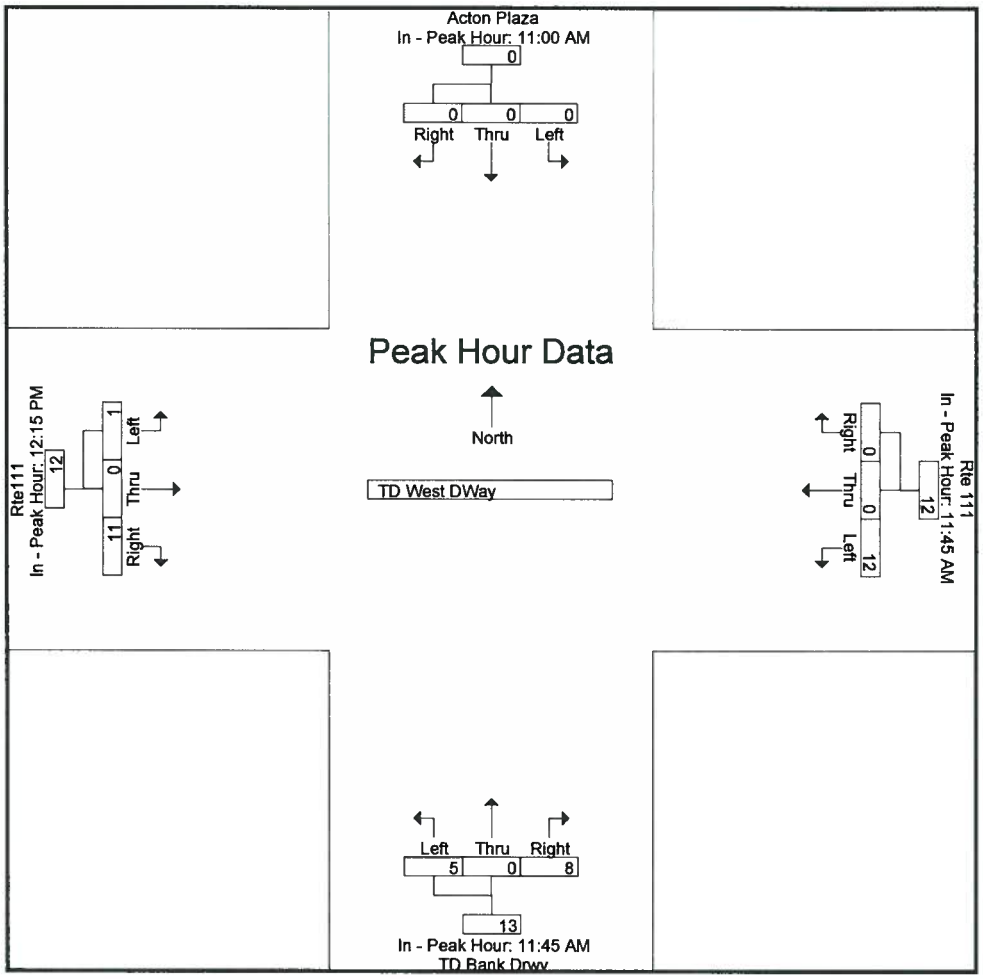

Accurate Counts
978-664-2565

N/S Street : Private Driveway
/W Street : Route 111
ity/State : Acton, MA
Veather : Clear

File Name : 118100S2
Site Code : 11810002
Start Date : 10/20/2012
Page No : 1

Groups Printed- Cars

	Route 111 From East		Private Dr From South		Route 111 From West		
Start Time	Left	Thru	Left	Right	Thru	Right	Int. Total
11:00 AM	0	0	0	0	0	1	1
11:15 AM	0	0	4	0	0	4	8
11:30 AM	0	0	1	0	0	1	2
11:45 AM	0	0	1	0	0	1	2
Total	0	0	6	0	0	7	13
12:00 PM	1	0	1	0	0	1	3
12:15 PM	0	0	0	0	0	0	0
12:30 PM	0	0	1	0	0	1	2
12:45 PM	1	0	0	1	0	1	3
Total	2	0	2	1	0	3	8
01:00 PM	0	0	1	0	0	0	1
01:15 PM	0	0	0	0	0	0	0
01:30 PM	0	0	2	0	0	1	3
01:45 PM	0	0	0	0	0	1	1
Total	0	0	3	0	0	2	5
Grand Total	2	0	11	1	0	12	26
Apprch %	100	0	91.7	8.3	0	100	
Total %	7.7	0	42.3	3.8	0	46.2	

	Route 111 From East			Private Dr From South			Route 111 From West			
Start Time	Left	Thru	App. Total	Left	Right	App. Total	Thru	Right	App. Total	Int. Total
Peak Hour Analysis From 11:00 AM to 01:45 PM - Peak 1 of 1										
Peak Hour for Entire Intersection Begins at 11:15 AM										
11:15 AM	0	0	0	**4**	0	**4**	0	**4**	**4**	**8**
11:30 AM	0	0	0	1	0	1	0	1	1	2
11:45 AM	0	0	0	1	0	1	0	1	1	2
12:00 PM	**1**	0	**1**	1	0	1	0	1	1	3
Total Volume	1	0	1	7	0	7	0	7	7	15
% App. Total	100	0		100	0		0	100		
PHF	.250	.000	.250	.438	.000	.438	.000	.438	.438	.469

Accurate Counts
978-664-2565

N/S Street : Private Driveway
E/W Street : Route 111
City/State : Acton, MA
Weather : Clear

File Name : 118100S2
Site Code : 11810002
Start Date : 10/20/2012
Page No : 2

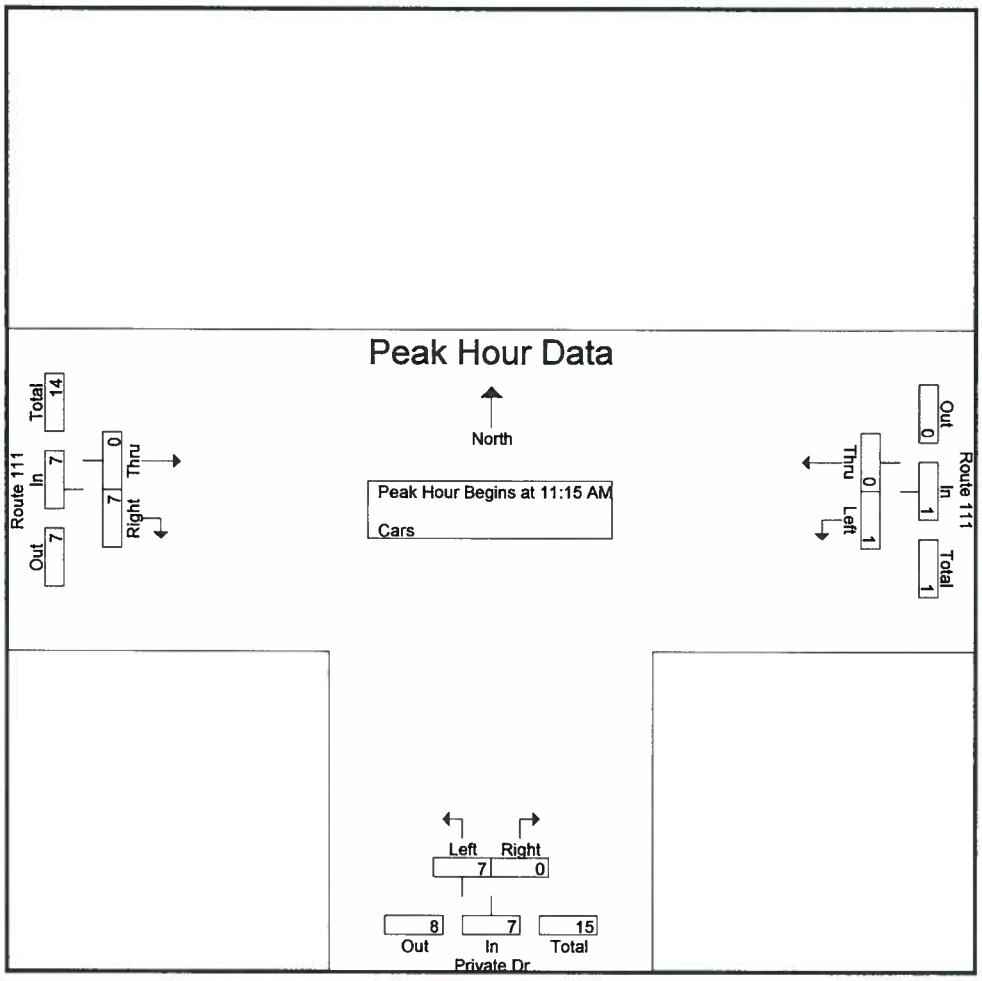

Peak Hour Analysis From 11:00 AM to 01:45 PM - Peak 1 of 1
Peak Hour for Each Approach Begins at:

	12:00 PM			11:15 AM			11:00 AM		
+0 mins.	1	0	1	4	0	4	0	1	1
+15 mins.	0	0	0	1	0	1	0	4	4
+30 mins.	0	0	0	1	0	1	0	1	1
+45 mins.	1	0	1	1	0	1	0	1	1
Total Volume	2	0	2	7	0	7	0	7	7
% App. Total	100	0		100	0		0	100	
PHF	.500	.000	.500	.438	.000	.438	.000	.438	.438

Accurate Counts
978-664-2565

N/S Street : Private Driveway
E/W Street : Route 111
City/State : Acton, MA
Weather : Clear

File Name : 118100S2
Site Code : 11810002
Start Date : 10/20/2012
Page No : 3

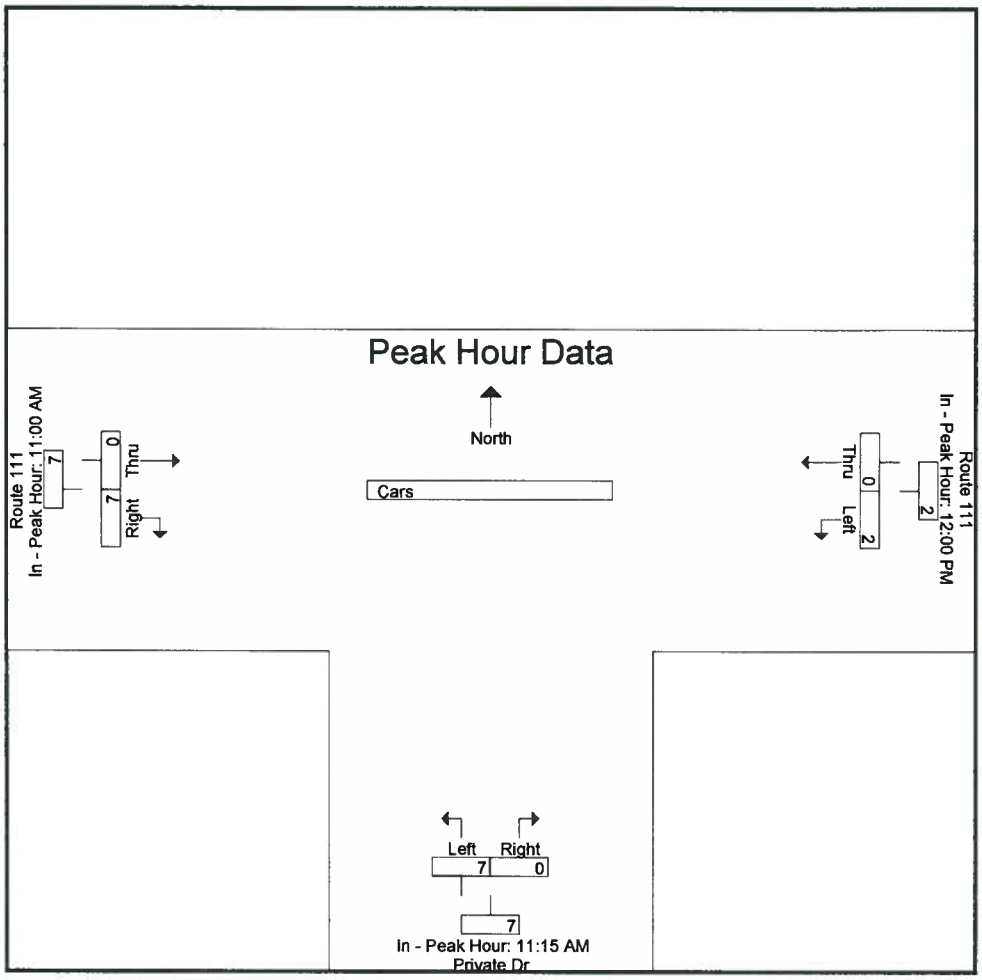

Accurate Counts
978-664-2565

N/S Street : Private Driveway
E/W Street : Route 111
City/State : Acton, MA
Weather : Clear

File Name : 118100S2
Site Code : 11810002
Start Date : 10/20/2012
Page No : 1

Groups Printed- Bikes Peds

	Route 111 From East			Private Dr From South			Route 111 From West					
Start Time	Left	Thru	Peds	Left	Right	Peds	Thru	Right	Peds	Exclu. Total	Inclu. Total	Int. Total
11:00 AM	0	0	0	0	0	1	0	0	0	1	0	1
11:15 AM	0	0	0	0	0	0	0	0	0	0	0	0
11:30 AM	0	0	0	0	0	0	0	0	0	0	0	0
11:45 AM	0	0	0	0	0	0	0	0	0	0	0	0
Total	0	0	0	0	0	1	0	0	0	1	0	1
12:00 PM	0	0	0	0	0	0	0	0	0	0	0	0
12:15 PM	0	0	0	0	0	0	0	0	0	0	0	0
12:30 PM	0	1	0	0	0	0	1	0	0	0	2	2
12:45 PM	0	0	0	0	0	0	0	0	0	0	0	0
Total	0	1	0	0	0	0	1	0	0	0	2	2
01:00 PM	0	0	0	0	0	0	0	0	0	0	0	0
01:15 PM	0	0	0	0	0	0	0	0	0	0	0	0
01:30 PM	0	0	0	0	0	0	0	0	0	0	0	0
01:45 PM	0	0	0	0	0	0	0	0	0	0	0	0
Total	0	0	0	0	0	0	0	0	0	0	0	0
Grand Total	0	1	0	0	0	1	1	0	0	1	2	3
Apprch %	0	100		0	0		100	0				
Total %	0	50		0	0		50	0		33.3	66.7	

	Route 111 From East			Private Dr From South			Route 111 From West			
Start Time	Left	Thru	App. Total	Left	Right	App. Total	Thru	Right	App. Total	Int. Total
Peak Hour Analysis From 11:00 AM to 01:45 PM - Peak 1 of 1										
Peak Hour for Entire Intersection Begins at 11:45 AM										
11:45 AM	0	0	0	0	0	0	0	0	0	0
12:00 PM	0	0	0	0	0	0	0	0	0	0
12:15 PM	0	0	0	0	0	0	0	0	0	0
12:30 PM	0	1	1	0	0	0	1	0	1	2
Total Volume	0	1	1	0	0	0	1	0	1	2
% App. Total	0	100		0	0		100	0		
PHF	.000	.250	.250	.000	.000	.000	.250	.000	.250	.250

Accurate Counts
978-664-2565

N/S Street : Private Driveway
E/W Street : Route 111
City/State : Acton, MA
Weather : Clear

File Name : 118100S2
Site Code : 11810002
Start Date : 10/20/2012
Page No : 2

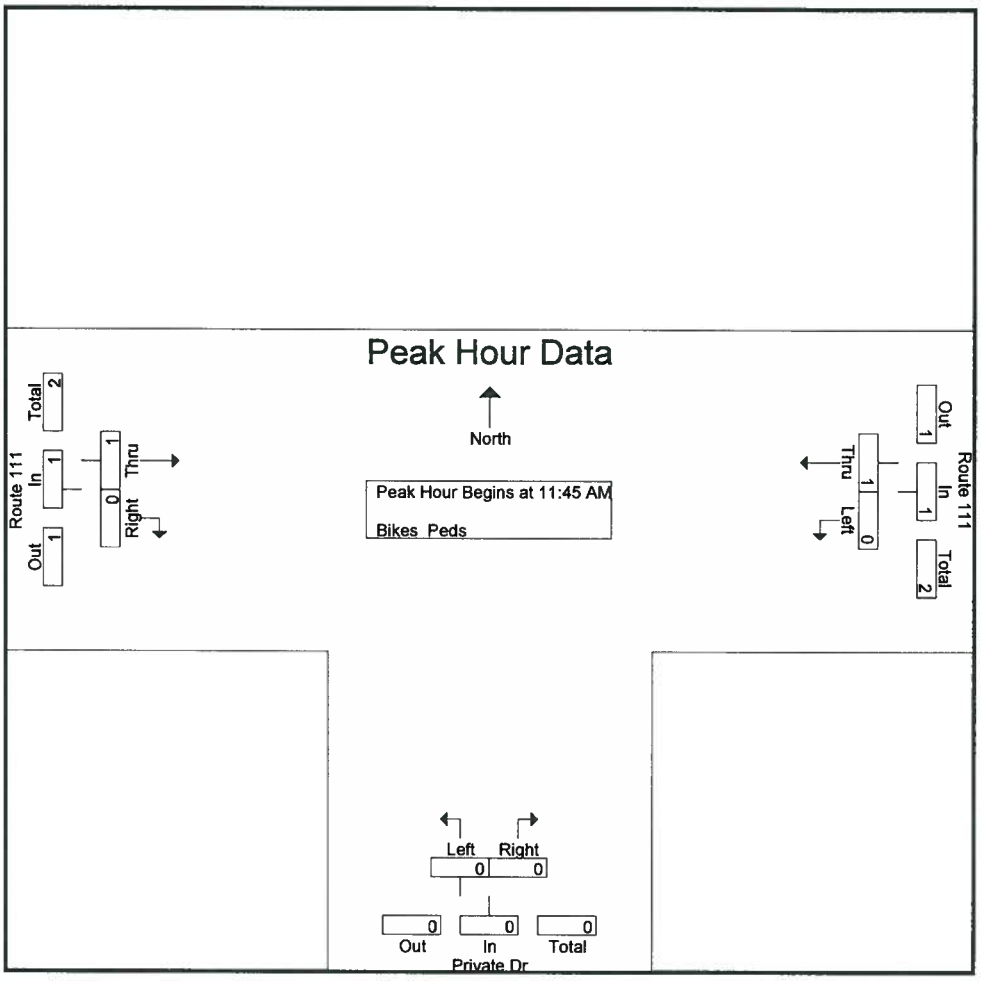

Peak Hour Analysis From 11:00 AM to 01:45 PM - Peak 1 of 1
Peak Hour for Each Approach Begins at:

	11:45 AM			11:00 AM			11:45 AM		
+0 mins.	0	0	0	0	0	0	0	0	0
+15 mins.	0	0	0	0	0	0	0	0	0
+30 mins.	0	0	0	0	0	0	0	0	0
+45 mins.	0	1	1	0	0	0	1	0	1
Total Volume	0	1	1	0	0	0	1	0	1
% App. Total	0	100		0	0		100	0	
PHF	.000	.250	.250	.000	.000	.000	.250	.000	.250

Accurate Counts
978-664-2565

N/S Street : Private Driveway
/W Street : Route 111
ity/State : Acton, MA
Weather : Clear

File Name : 118100S2
Site Code : 11810002
Start Date : 10/20/2012
Page No : 3

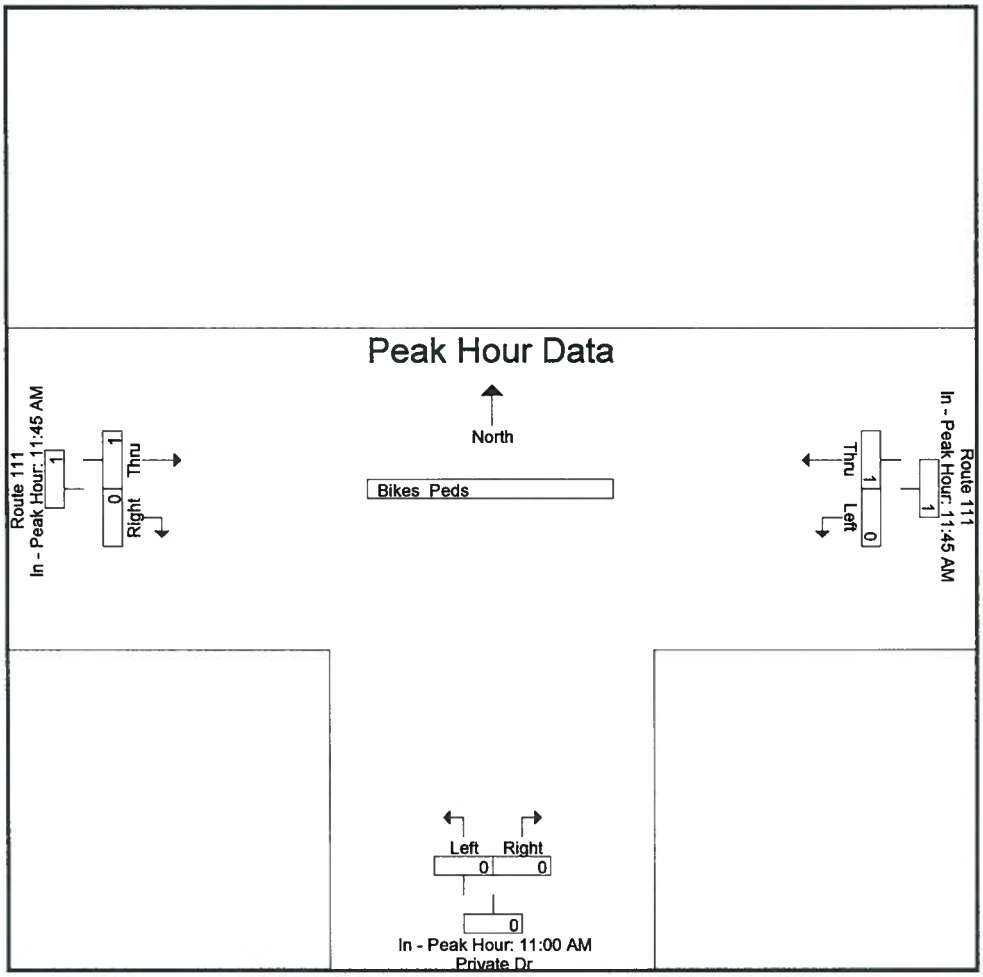

Appendix C: Monthly Traffic Variations

MASSACHUSETTS HIGHWAY DEPARTMENT - STATEWIDE TRAFFIC DATA COLLECTION

2007 WEEKDAY SEASONAL FACTORS *

* Note: These are weekday factors. The average of the factors for the year will not equal 1, as weekend data are not considered.

FACTOR GROUP	JAN	FEB	MAR	APR	MAY	JUN	JUL	AUG	SEP	OCT	NOV	DEC
GROUP 1 - WEST INTERSTATE	0.95	0.91	0.85	0.85	0.87	0.86	0.91	0.96	0.90	0.88	0.90	0.91
GROUP 2 - RURAL MAJOR COLLECTOR (R-5)	1.11	1.07	1.07	0.98	0.92	0.88	0.88	0.86	0.89	0.93	1.01	1.04
GROUP 3A - RECREATIONAL **(1-4) See below	1.26	1.20	1.18	1.04	0.96	0.86	0.78	0.79	0.93	0.99	1.07	1.12
GROUP 3B - RECREATIONAL ***(5) See below	1.22	1.18	1.20	1.04	0.96	0.88	0.73	0.74	0.99	1.02	1.12	1.17
GROUP 4 - I-495 INTERSTATE	1.05	1.03	1.03	0.95	0.93	0.87	0.86	0.83	0.89	0.93	0.93	0.96
GROUP 5 - EAST INTERSTATE	1.02	0.99	0.97	0.94	0.95	0.91	0.92	0.92	0.94	0.94	0.98	0.99
GROUP 6 - URBAN ARTERIALS, COLLECTORS & RURAL ARTERIALS (R-2, R-3)	1.03	0.99	0.97	0.92	0.91	0.90	0.92	0.91	0.92	0.93	0.97	0.97
GROUP 7 - I-84 PROXIMITY (STA. 17)	0.84	1.15	1.17	1.08	1.10	1.02	1.01	0.96	1.06	1.06	1.11	1.15
GROUP 8 - I-295 PROXIMITY (STA. 6590)	0.95	1.01	0.96	0.92	0.89	0.88	0.91	0.86	0.91	0.93	0.95	0.92
GROUP 9 - I-195 PROXIMITY (STA. 7)	1.10	1.03	1.00	0.94	0.91	0.87	0.84	0.82	0.88	0.93	1.03	0.99

RECREATIONAL: (ALL YEARS)

**GROUP 3A:
1. CAPE COD (ALL TOWNS)
2.PLYMOUTH(SOUTH OF RTE.3A)

7014, 7079,7080,7090,7091,7092,7093,7094,7095,7096,7097,7108,7178
3.MARTHA'S VINEYARD
4.NANTUCKET

***GROUP 3B:
5.PERMANENTS 2 & 189
1066,1067,1083,1084,1085,1086,1087,1088,1089,1090,1091,1092,
1093,1094,1095,1096,1097,1098,1099,1100,1101,1102,1103,1104,
1105,1106,1107,1108,1113,1114,1116,2196,2197,2198

2007 AXLE CORRECTION FACTORS

ROAD INVENTORY FUNCTIONAL CLASSIFICATION	AXLE CORRECTION FACTOR
RURAL	
1	0.90
2	0.93
3	0.98
0,5,6	0.98
URBAN	
1	0.96
2,3	0.97
5	0.99
0,6	0.99
I-84	0.83

Apply I-84 factor to stations: 3290,3921,3929

ROUND OFF

0 - 999.....10
> 1,000.....100

Appendix D: Capacity Analysis Worksheets

HCM Unsignalized Intersection Capacity Analysis
3: Common Drive/Plaza Drive & Rte. 111

3/21/2013

Movement	EBL	EBT	EBR	WBL	WBT	WBR	NBL	NBT	NBR	SBL	SBT	SBR
Lane Configurations												
Volume (veh/h)	159	262	0	1	388	146	1	5	1	79	0	241
Sign Control		Free			Free			Stop			Stop	
Grade		0%			0%			0%			0%	
Peak Hour Factor	0.91	0.91	0.91	0.94	0.94	0.94	0.63	0.63	0.63	0.92	0.92	0.92
Hourly flow rate (vph)	175	288	0	1	413	155	2	8	2	86	0	262
Pedestrians												
Lane Width (ft)												
Walking Speed (ft/s)												
Percent Blockage												
Right turn flare (veh)												
Median type		None			None							
Median storage veh)												
Upstream signal (ft)												
pX, platoon unblocked												
vC, conflicting volume	568			288			1392	1208	288	1135	1130	490
vC1, stage 1 conf vol												
vC2, stage 2 conf vol												
vCu, unblocked vol	568			288			1392	1208	288	1135	1130	490
tC, single (s)	4.1			4.1			7.1	6.5	6.2	7.1	6.5	6.2
tC, 2 stage (s)												
tF (s)	2.2			2.2			3.5	4.0	3.3	3.5	4.0	3.3
p0 queue free %	83			100			97	95	100	43	100	55
cM capacity (veh/h)	1014			1286			57	153	756	151	170	582

Direction, Lane #	EB 1	WB 1	NB 1	SB 1
Volume Total	463	569	11	348
Volume Left	175	1	2	86
Volume Right	0	155	2	262
cSH	1014	1286	136	341
Volume to Capacity	0.17	0.00	0.08	1.02
Queue Length 95th (ft)	16	0	7	297
Control Delay (s)	4.7	0.0	33.8	90.0
Lane LOS	A	A	D	F
Approach Delay (s)	4.7	0.0	33.8	90.0
Approach LOS			D	F

Intersection Summary			
Average Delay	24.3		
Intersection Capacity Utilization	87.8%	ICU Level of Service	E
Analysis Period (min)	15		

HCM Unsignalized Intersection Capacity Analysis
3: Common Drive/Plaza Drive & Rte. 111

3/21/2013

Movement	EBL	EBT	EBR	WBL	WBT	WBR	NBL	NBT	NBR	SBL	SBT	SBR
Lane Configurations												
Volume (veh/h)	159	285	0	1	418	146	1	5	1	79	0	241
Sign Control		Free			Free			Stop			Stop	
Grade		0%			0%			0%			0%	
Peak Hour Factor	0.91	0.91	0.91	0.94	0.94	0.94	0.63	0.63	0.63	0.92	0.92	0.92
Hourly flow rate (vph)	175	313	0	1	445	155	2	8	2	86	0	262
Pedestrians												
Lane Width (ft)												
Walking Speed (ft/s)												
Percent Blockage												
Right turn flare (veh)												
Median type		None			None							
Median storage veh)												
Upstream signal (ft)												
pX, platoon unblocked												
vC, conflicting volume	600			313			1449	1265	313	1193	1187	522
vC1, stage 1 conf vol												
vC2, stage 2 conf vol												
vCu, unblocked vol	600			313			1449	1265	313	1193	1187	522
tC, single (s)	4.1			4.1			7.1	6.5	6.2	7.1	6.5	6.2
tC, 2 stage (s)												
tF (s)	2.2			2.2			3.5	4.0	3.3	3.5	4.0	3.3
p0 queue free %	82			100			97	94	100	37	100	53
cM capacity (veh/h)	987			1259			50	140	732	136	156	558

Direction, Lane #	EB 1	WB 1	NB 1	SB 1
Volume Total	488	601	11	348
Volume Left	175	1	2	86
Volume Right	0	155	2	262
cSH	987	1259	123	317
Volume to Capacity	0.18	0.00	0.09	1.10
Queue Length 95th (ft)	16	0	7	338
Control Delay (s)	4.7	0.0	37.1	116.6
Lane LOS	A	A	E	F
Approach Delay (s)	4.7	0.0	37.1	116.6
Approach LOS			E	F

Intersection Summary			
Average Delay	29.9		
Intersection Capacity Utilization	90.6%	ICU Level of Service	E
Analysis Period (min)	15		

HCM Unsignalized Intersection Capacity Analysis
3: Common Drive/Plaza Drive & Rte. 111

3/21/2013

Movement	EBL	EBT	EBR	WBL	WBT	WBR	NBL	NBT	NBR	SBL	SBT	SBR
Lane Configurations												
Volume (veh/h)	157	281	26	25	419	145	22	20	18	77	16	239
Sign Control		Free			Free			Stop			Stop	
Grade		0%			0%			0%			0%	
Peak Hour Factor	0.91	0.91	0.91	0.94	0.94	0.94	0.63	0.63	0.63	0.92	0.92	0.92
Hourly flow rate (vph)	173	309	29	27	446	154	35	32	29	84	17	260
Pedestrians												
Lane Width (ft)												
Walking Speed (ft/s)												
Percent Blockage												
Right turn flare (veh)												
Median type		None			None							
Median storage veh)												
Upstream signal (ft)												
pX, platoon unblocked												
vC, conflicting volume	600			337			1513	1321	323	1289	1258	523
vC1, stage 1 conf vol												
vC2, stage 2 conf vol												
vCu, unblocked vol	600			337			1513	1321	323	1289	1258	523
tC, single (s)	4.1			4.1			7.1	6.5	6.2	7.1	6.5	6.2
tC, 2 stage (s)												
tF (s)	2.2			2.2			3.5	4.0	3.3	3.5	4.0	3.3
p0 queue free %	83			98			15	75	96	12	87	53
cM capacity (veh/h)	987			1233			41	128	723	95	139	558

Direction, Lane #	EB 1	WB 1	NB 1	NB 2	SB 1
Volume Total	510	627	67	29	361
Volume Left	173	27	35	0	84
Volume Right	29	154	0	29	260
cSH	987	1233	61	723	245
Volume to Capacity	0.17	0.02	1.10	0.04	1.48
Queue Length 95th (ft)	16	2	135	3	525
Control Delay (s)	4.5	0.6	259.5	10.2	272.3
Lane LOS	A	A	F	B	F
Approach Delay (s)	4.5	0.6	184.7		272.3
Approach LOS			F		F

Intersection Summary			
Average Delay	74.4		
Intersection Capacity Utilization	93.8%	ICU Level of Service	F
Analysis Period (min)	15		

Queues
3: Common Drive/Plaza Drive & Rte. 111

3/21/2013

Lane Group	EBL	EBT	WBL	WBT	NBT	NBR	SBT
Lane Group Flow (vph)	173	338	27	600	67	29	361
v/c Ratio	0.48	0.37	0.05	0.78	0.28	0.06	0.77
Control Delay	11.2	11.3	6.3	23.1	25.3	0.3	25.5
Queue Delay	0.0	0.0	0.0	0.0	0.0	0.0	0.0
Total Delay	11.2	11.3	6.3	23.1	25.3	0.3	25.5
Queue Length 50th (ft)	27	57	4	184	21	0	64
Queue Length 95th (ft)	54	150	13	314	38	0	#197
Internal Link Dist (ft)		75		65	138		111
Turn Bay Length (ft)							
Base Capacity (vph)	363	1142	551	1065	329	585	586
Starvation Cap Reductn	0	0	0	0	0	0	0
Spillback Cap Reductn	0	0	0	0	0	0	0
Storage Cap Reductn	0	0	0	0	0	0	0
Reduced v/c Ratio	0.48	0.30	0.05	0.56	0.20	0.05	0.62

Intersection Summary

95th percentile volume exceeds capacity, queue may be longer.
Queue shown is maximum after two cycles.

Movement	EBL	EBT	EBR	WBL	WBT	WBR	NBL	NBT	NBR	SBL	SBT	SBR
Lane Configurations												
Volume (vph)	157	281	26	25	419	145	22	20	18	77	16	239
Ideal Flow (vphpl)	1900	1900	1900	1900	1900	1900	1900	1900	1900	1900	1900	1900
Total Lost time (s)	6.0	6.0		6.0	6.0			6.0	6.0		6.0	
Lane Util. Factor	1.00	1.00		1.00	1.00			1.00	1.00		1.00	
Frt	1.00	0.99		1.00	0.96			1.00	0.85		0.90	
Flt Protected	0.95	1.00		0.95	1.00			0.97	1.00		0.99	
Satd. Flow (prot)	1805	1842		1805	1800			1852	1615		1696	
Flt Permitted	0.23	1.00		0.56	1.00			0.57	1.00		0.90	
Satd. Flow (perm)	445	1842		1059	1800			1090	1615		1544	
Peak-hour factor, PHF	0.91	0.91	0.91	0.94	0.94	0.94	0.63	0.63	0.63	0.92	0.92	0.92
Adj. Flow (vph)	173	309	29	27	446	154	35	32	29	84	17	260
RTOR Reduction (vph)	0	5	0	0	18	0	0	0	23	0	136	0
Lane Group Flow (vph)	173	333	0	27	582	0	0	67	6	0	225	0
Heavy Vehicles (%)	0%	2%	0%	0%	2%	0%	0%	0%	0%	0%	0%	0%
Turn Type	pm+pt	NA		pm+pt	NA		Perm	NA	Perm	Perm	NA	
Protected Phases	5	2		1	6			8			4	
Permitted Phases	2			6			8		8	4		
Actuated Green, G (s)	32.4	28.8		27.8	26.5			12.6	12.6		12.6	
Effective Green, g (s)	32.4	28.8		27.8	26.5			12.6	12.6		12.6	
Actuated g/C Ratio	0.53	0.47		0.46	0.44			0.21	0.21		0.21	
Clearance Time (s)	6.0	6.0		6.0	6.0			6.0	6.0		6.0	
Vehicle Extension (s)	3.0	3.0		3.0	3.0			3.0	3.0		3.0	
Lane Grp Cap (vph)	318	873		500	785			226	335		320	
v/s Ratio Prot	c0.03	0.18		0.00	c0.32							
v/s Ratio Perm	0.26			0.02				0.06	0.00		c0.15	
v/c Ratio	0.54	0.38		0.05	0.74			0.30	0.02		0.70	
Uniform Delay, d1	9.2	10.2		9.1	14.2			20.3	19.1		22.3	
Progression Factor	1.00	1.00		1.00	1.00			1.00	1.00		1.00	
Incremental Delay, d2	1.9	0.3		0.0	3.8			0.7	0.0		6.8	
Delay (s)	11.1	10.5		9.1	18.0			21.0	19.2		29.1	
Level of Service	B	B		A	B			C	B		C	
Approach Delay (s)		10.7			17.7			20.5			29.1	
Approach LOS		B			B			C			C	

Intersection Summary			
HCM 2000 Control Delay	18.2	HCM 2000 Level of Service	B
HCM 2000 Volume to Capacity ratio	0.71		
Actuated Cycle Length (s)	60.7	Sum of lost time (s)	18.0
Intersection Capacity Utilization	81.1%	ICU Level of Service	D
Analysis Period (min)	15		

c Critical Lane Group

HCM Unsignalized Intersection Capacity Analysis
3: Common Drive/Plaza Drive & Rte. 111

3/21/2013

Movement	EBL	EBT	EBR	WBL	WBT	WBR	NBL	NBT	NBR	SBL	SBT	SBR
Lane Configurations												
Volume (veh/h)	194	313	1	5	343	165	4	3	6	109	1	253
Sign Control		Free			Free			Stop			Stop	
Grade		0%			0%			0%			0%	
Peak Hour Factor	0.85	0.85	0.85	0.93	0.93	0.93	0.65	0.65	0.65	0.90	0.90	0.90
Hourly flow rate (vph)	228	368	1	5	369	177	6	5	9	121	1	281
Pedestrians												
Lane Width (ft)												
Walking Speed (ft/s)												
Percent Blockage												
Right turn flare (veh)												
Median type		None			None							
Median storage veh)												
Upstream signal (ft)												
pX, platoon unblocked												
vC, conflicting volume	546			369			1575	1382	369	1305	1294	458
vC1, stage 1 conf vol												
vC2, stage 2 conf vol												
vCu, unblocked vol	546			369			1575	1382	369	1305	1294	458
tC, single (s)	4.1			4.1			7.1	6.5	6.2	7.1	6.5	6.2
tC, 2 stage (s)												
tF (s)	2.2			2.2			3.5	4.0	3.3	3.5	4.0	3.3
p0 queue free %	78			100			84	96	99	0	99	54
cM capacity (veh/h)	1033			1200			40	113	681	110	127	605

Direction, Lane #	EB 1	WB 1	NB 1	SB 1
Volume Total	598	552	20	403
Volume Left	228	5	6	121
Volume Right	1	177	9	281
cSH	1033	1200	95	255
Volume to Capacity	0.22	0.00	0.21	1.58
Queue Length 95th (ft)	21	0	18	616
Control Delay (s)	5.3	0.1	52.6	313.6
Lane LOS	A	A	F	F
Approach Delay (s)	5.3	0.1	52.6	313.6
Approach LOS			F	F

Intersection Summary			
Average Delay	83.1		
Intersection Capacity Utilization	94.0%	ICU Level of Service	F
Analysis Period (min)	15		

HCM Unsignalized Intersection Capacity Analysis
3: Common Drive/Plaza Drive & Rte. 111

3/21/2013

Movement	EBL	EBT	EBR	WBL	WBT	WBR	NBL	NBT	NBR	SBL	SBT	SBR
Lane Configurations												
Volume (veh/h)	194	350	1	5	382	165	4	3	6	109	1	253
Sign Control		Free			Free			Stop			Stop	
Grade		0%			0%			0%			0%	
Peak Hour Factor	0.85	0.85	0.85	0.93	0.93	0.93	0.65	0.65	0.65	0.90	0.90	0.90
Hourly flow rate (vph)	228	412	1	5	411	177	6	5	9	121	1	281
Pedestrians												
Lane Width (ft)												
Walking Speed (ft/s)												
Percent Blockage												
Right turn flare (veh)												
Median type		None			None							
Median storage veh)												
Upstream signal (ft)												
pX, platoon unblocked												
vC, conflicting volume	588			413			1661	1468	412	1391	1380	499
vC1, stage 1 conf vol												
vC2, stage 2 conf vol												
vCu, unblocked vol	588			413			1661	1468	412	1391	1380	499
tC, single (s)	4.1			4.1			7.1	6.5	6.2	7.1	6.5	6.2
tC, 2 stage (s)												
tF (s)	2.2			2.2			3.5	4.0	3.3	3.5	4.0	3.3
p0 queue free %	77			100			81	95	99	0	99	51
cM capacity (veh/h)	997			1157			33	99	644	94	112	573

Direction, Lane #	EB 1	WB 1	NB 1	SB 1
Volume Total	641	594	20	403
Volume Left	228	5	6	121
Volume Right	1	177	9	281
cSH	997	1157	80	226
Volume to Capacity	0.23	0.00	0.25	1.78
Queue Length 95th (ft)	22	0	22	690
Control Delay (s)	5.3	0.1	64.4	406.5
Lane LOS	A	A	F	F
Approach Delay (s)	5.3	0.1	64.4	406.5
Approach LOS			F	F

Intersection Summary			
Average Delay	101.8		
Intersection Capacity Utilization	98.0%	ICU Level of Service	F
Analysis Period (min)	15		

HCM Unsignalized Intersection Capacity Analysis
3: Common Drive/Plaza Drive & Rte. 111

3/21/2013

Movement	EBL	EBT	EBR	WBL	WBT	WBR	NBL	NBT	NBR	SBL	SBT	SBR
Lane Configurations												
Volume (veh/h)	192	347	21	23	383	165	21	15	18	108	14	251
Sign Control		Free			Free			Stop			Stop	
Grade		0%			0%			0%			0%	
Peak Hour Factor	0.85	0.85	0.85	0.93	0.93	0.93	0.90	0.90	0.90	0.90	0.90	0.90
Hourly flow rate (vph)	226	408	25	25	412	177	23	17	20	120	16	279
Pedestrians												
Lane Width (ft)												
Walking Speed (ft/s)												
Percent Blockage												
Right turn flare (veh)												
Median type		None			None							
Median storage veh)												
Upstream signal (ft)												
pX, platoon unblocked												
vC, conflicting volume	589			433			1709	1511	421	1451	1435	501
vC1, stage 1 conf vol												
vC2, stage 2 conf vol												
vCu, unblocked vol	589			433			1709	1511	421	1451	1435	501
tC, single (s)	4.1			4.1			7.1	6.5	6.2	7.1	6.5	6.2
tC, 2 stage (s)												
tF (s)	2.2			2.2			3.5	4.0	3.3	3.5	4.0	3.3
p0 queue free %	77			98			13	82	97	0	85	51
cM capacity (veh/h)	996			1137			27	92	637	75	102	572

Direction, Lane #	EB 1	WB 1	NB 1	NB 2	SB 1
Volume Total	659	614	40	20	414
Volume Left	226	25	23	0	120
Volume Right	25	177	0	20	279
cSH	996	1137	38	637	185
Volume to Capacity	0.23	0.02	1.05	0.03	2.24
Queue Length 95th (ft)	22	2	100	2	834
Control Delay (s)	5.2	0.6	323.3	10.8	617.4
Lane LOS	A	A	F	B	F
Approach Delay (s)	5.2	0.6	219.2		617.4
Approach LOS			F		F

Intersection Summary			
Average Delay	156.2		
Intersection Capacity Utilization	100.5%	ICU Level of Service	G
Analysis Period (min)	15		

Queues
3: Common Drive/Plaza Drive & Rte. 111

3/21/2013

Lane Group	EBL	EBT	WBL	WBT	NBT	NBR	SBT
Lane Group Flow (vph)	226	433	25	589	40	20	415
v/c Ratio	0.62	0.45	0.05	0.88	0.14	0.04	0.87
Control Delay	17.1	13.6	7.6	36.2	21.4	0.2	37.0
Queue Delay	0.0	0.0	0.0	0.0	0.0	0.0	0.0
Total Delay	17.1	13.6	7.6	36.2	21.4	0.2	37.0
Queue Length 50th (ft)	43	92	4	215	13	0	112
Queue Length 95th (ft)	81	195	13	#398	36	0	#264
Internal Link Dist (ft)		74		66	138		111
Turn Bay Length (ft)							
Base Capacity (vph)	364	965	458	741	337	548	524
Starvation Cap Reductn	0	0	0	0	0	0	0
Spillback Cap Reductn	0	0	0	0	0	0	0
Storage Cap Reductn	0	0	0	0	0	0	0
Reduced v/c Ratio	0.62	0.45	0.05	0.79	0.12	0.04	0.79

Intersection Summary

95th percentile volume exceeds capacity, queue may be longer.
Queue shown is maximum after two cycles.

Movement	EBL	EBT	EBR	WBL	WBT	WBR	NBL	NBT	NBR	SBL	SBT	SBR
Lane Configurations												
Volume (vph)	192	347	21	23	383	165	21	15	18	108	14	251
Ideal Flow (vphpl)	1900	1900	1900	1900	1900	1900	1900	1900	1900	1900	1900	1900
Total Lost time (s)	6.0	6.0		6.0	6.0			6.0	6.0		6.0	
Lane Util. Factor	1.00	1.00		1.00	1.00			1.00	1.00		1.00	
Frt	1.00	0.99		1.00	0.95			1.00	0.85		0.91	
Flt Protected	0.95	1.00		0.95	1.00			0.97	1.00		0.99	
Satd. Flow (prot)	1805	1866		1805	1802			1847	1615		1692	
Flt Permitted	0.17	1.00		0.51	1.00			0.64	1.00		0.89	
Satd. Flow (perm)	325	1866		970	1802			1218	1615		1524	
Peak-hour factor, PHF	0.85	0.85	0.85	0.93	0.93	0.93	0.90	0.90	0.90	0.90	0.90	0.90
Adj. Flow (vph)	226	408	25	25	412	177	23	17	20	120	16	279
RTOR Reduction (vph)	0	3	0	0	21	0	0	0	15	0	109	0
Lane Group Flow (vph)	226	430	0	25	568	0	0	40	5	0	306	0
Heavy Vehicles (%)	0%	1%	0%	0%	1%	0%	0%	0%	0%	0%	0%	1%
Turn Type	pm+pt	NA		pm+pt	NA		Perm	NA	Perm	Perm	NA	
Protected Phases	5	2		1	6			8			4	
Permitted Phases	2			6			8		8	4		
Actuated Green, G (s)	41.5	34.0		28.9	27.4			16.0	16.0		16.0	
Effective Green, g (s)	41.5	34.0		28.9	27.4			16.0	16.0		16.0	
Actuated g/C Ratio	0.60	0.49		0.42	0.39			0.23	0.23		0.23	
Clearance Time (s)	6.0	6.0		6.0	6.0			6.0	6.0		6.0	
Vehicle Extension (s)	3.0	3.0		3.0	3.0			3.0	3.0		3.0	
Lane Grp Cap (vph)	366	912		421	710			280	371		350	
v/s Ratio Prot	c0.07	0.23		0.00	c0.32							
v/s Ratio Perm	0.30			0.02				0.03	0.00		c0.20	
v/c Ratio	0.62	0.47		0.06	0.80			0.14	0.01		0.87	
Uniform Delay, d1	10.6	11.8		12.0	18.6			21.3	20.7		25.8	
Progression Factor	1.00	1.00		1.00	1.00			1.00	1.00		1.00	
Incremental Delay, d2	3.1	0.4		0.1	6.3			0.2	0.0		20.6	
Delay (s)	13.7	12.2		12.1	24.9			21.5	20.7		46.4	
Level of Service	B	B		B	C			C	C		D	
Approach Delay (s)		12.7			24.4			21.2			46.4	
Approach LOS		B			C			C			D	

Intersection Summary			
HCM 2000 Control Delay	25.1	HCM 2000 Level of Service	C
HCM 2000 Volume to Capacity ratio	0.80		
Actuated Cycle Length (s)	69.5	Sum of lost time (s)	18.0
Intersection Capacity Utilization	84.7%	ICU Level of Service	E
Analysis Period (min)	15		

c Critical Lane Group