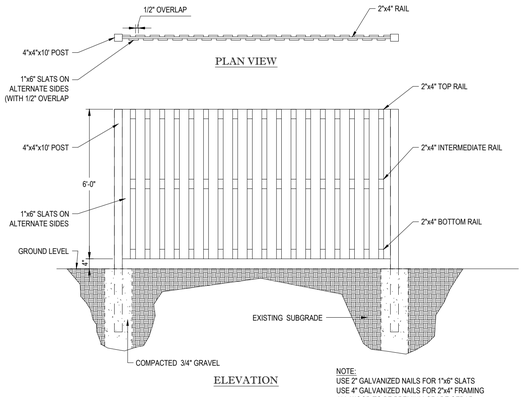

NOTE:
USE 2" GALVANIZED NAILS FOR 1"x6" SLATS
USE 4" GALVANIZED NAILS FOR 2"x4" FRAMING
ALL WOOD TO BE PREMIUM GRADE CEDAR

NOTES:
1. PREFERRED FENCING USED IN SUBURBAN SETTINGS. SHOULD NOT EXTEND PAST FACE OF BUILDING TO MAINTAIN VISIBILITY.
2. FENCE TO HAVE NATURAL FINISH.

BOARD ON BOARD CEDAR FENCE DETAIL

N.T.S.

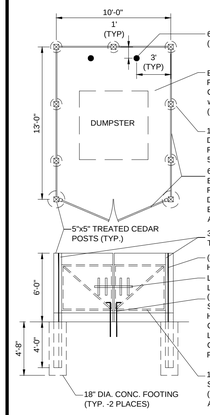

TRASH ENCLOSURE

N.T.S.

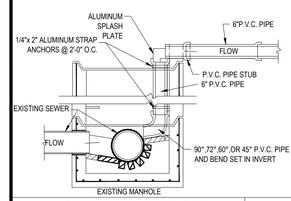

SEWER DROP INLET DETAIL

N.T.S.

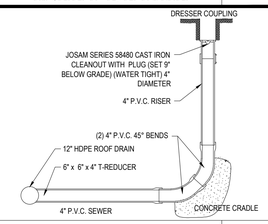

CLEANOUT DETAIL

N.T.S.

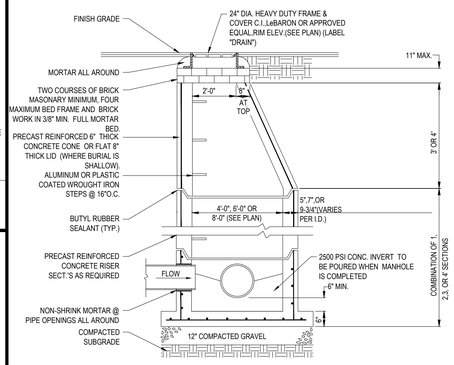

NOTE:
ALL STRUCTURES SHALL BE SUITABLE FOR H-20 LOADING AND SHALL MEET THE REQUIREMENTS OF ASTM C478.

TYP. PRECAST CONCRETE MANHOLE STORM DRAIN

N.T.S.

N.T.S.

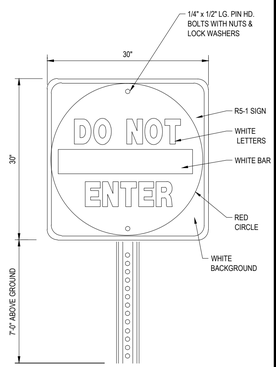

"DO NOT ENTER" SIGN

N.T.S.

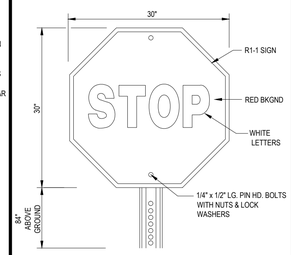

'STOP' SIGN

N.T.S.

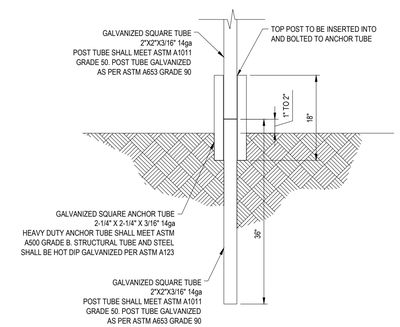

SQUARE TUBE BREAKAWAY SIGN POST DETAIL

N.T.S.

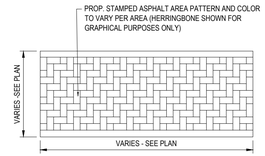

NOTES:

1. STREETPRINT PATTERN MAY BE SET INTO PAVEMENT EITHER AT THE TIME SURFACE COURSE IS LAYED AND STILL HOT OR AFTER THE WEARING COURSE HAS BEEN GIVEN TIME TO SET, WHEREBY THE CROSSWALK SECTION WOULD BE REHEATED AND THE PATTERN IMPRINTED INTO THE PAVING. CONTRACTOR SHALL CONSULT WITH STREETPRINT FOR SPECIFIC REQUIREMENTS AND COORDINATE WITH TOWNSHIP ENGINEER FOR INSPECTION PURPOSES.
2. EXISTING PAVEMENT AT CROSSINGS ARE TO BE MILLED AND OVERLAYED WITH A NEW WEARING COURSE. STREETPRINT PATTERN WILL BE SET INTO THE NEW OVERLAY COURSE. PLACEMENT OF THE PATTERN MAY BE AT PLACEMENT OF THE WEARING COURSE OR REHEATED AFTER A TIME PERIOD THE NEW WEARING COURSE IS ALLOWED TO SET. THE EXISTING PAVEMENT MAY BE REHEATED AS AN ALTERNATE, PROVIDED THE MANUFACTURER DETERMINES THIS IS FEASIBLE FOR THE EXISTING PAVEMENT CONDITIONS.
3. STREETPRINT CONTACT: PHONE 1-800-688-5652
WEBSITE: www.streetprint.com

"STREETPRINT" ASPHALT IMPRINTED TEXTURED CROSSWALKS

N.T.S.

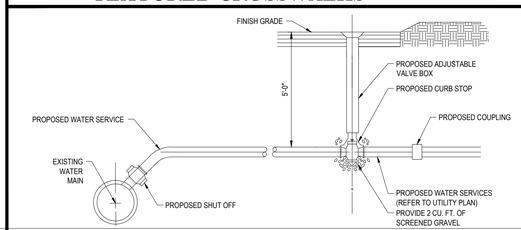

SERVICE CONNECTION DETAIL

N.T.S.

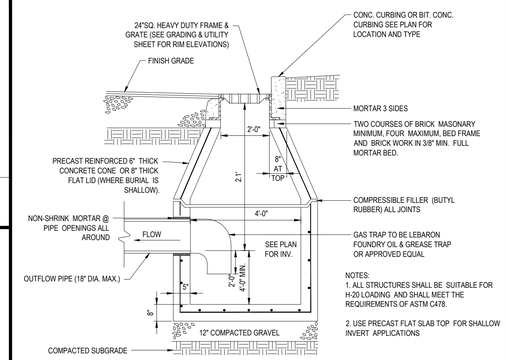

NOTES:
1. ALL STRUCTURES SHALL BE SUITABLE FOR H-20 LOADING AND SHALL MEET THE REQUIREMENTS OF ASTM C478.
2. USE PRECAST FLAT SLAB TOP FOR SHALLOW INVERT APPLICATIONS

PRECAST CONCRETE DEEP SUMP CATCH BASIN DETAIL

N.T.S.

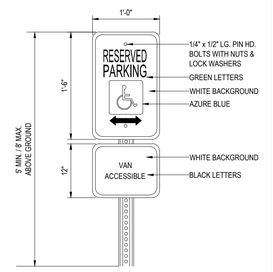

HANDICAP PARKING SIGN DETAIL

N.T.S.

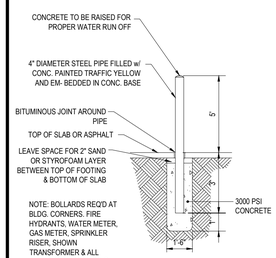

NOTE: BOLLARDS REQ'D AT BLDG. CORNERS, FIRE HYDRANTS, WATER METER, GAS METER, SPRINKLER RISER, SHOWN TRANSFORMER & ALL UTILITIES AT LOCATIONS SHOWN ON THESE DRAWINGS INTERIOR & EXTERIOR.

BOLLARD DETAIL

N.T.S.

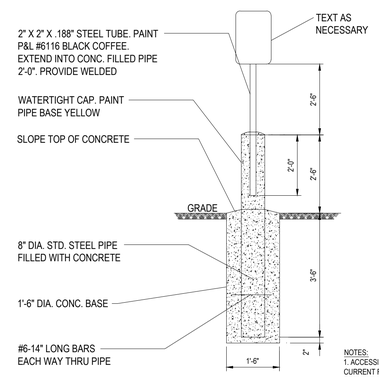

NOTES:
1. ACCESSIBLE PARKING SIGN SHALL CONFORM WITH CURRENT FEDERAL, STATE, AND LOCAL CODES AND REGULATIONS.
2.VAN ACCESSIBLE SIGN SHALL CONFORM WITH CURRENT FEDERAL, STATE, AND LOCAL CODES AND REGULATIONS.

SIGN BOLLARD DETAIL

N.T.S.

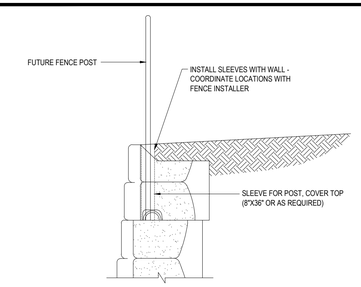

DISCLAIMER:
THESE TYPICAL DETAILS ARE PRELIMINARY AND CONCEPTUAL IN NATURE. THEY ARE PROVIDED FOR GENERAL INFORMATION PURPOSES ONLY. ANYONE MAKING USE OF THESE DETAILS AND RELATED INFORMATION DOES SO AT THEIR OWN RISK AND ASSUMES ALL LIABILITY FOR SUCH USE. SITE SPECIFIC DESIGN SHOULD BE PERFORMED BY A LICENSED PROFESSIONAL ENGINEER WHO IS FAMILIAR WITH THE ACTUAL SITE CONDITIONS, MATERIALS,AND LOCAL PRACTICES.

THIELE GEOTECH, INC. AND STONE STRONG LLC ARE THE AUTHORS OF THESE DRAWINGS AND RETAIN ALL COMMON LAW, STATUARY, AND OTHER RESERVED RIGHTS INCLUDING THE COPYRIGHT. LIMITED LICENSE IS GRANTED TO COPY, REPRODUCE, OR MODIFY THE DETAILS TO PREPARE CONSTRUCTION DRAWINGS FOR STONE STRONG RETAINING WALLS. THIELE GEOTECH, INC. AND STONE STRONG LLC MAKE NO WARRANTIES, EITHER EXPRESSED OR IMPLIED, OF MERCHANTABILITY OR FITNESS FOR ANY PARTICULAR PURPOSE, AND ACCEPT NO RESPONSIBILITY FOR THE ACCURACY, SUITABILITY, OR COMPLETENESS OF INFORMATION CONTAINED HEREIN.

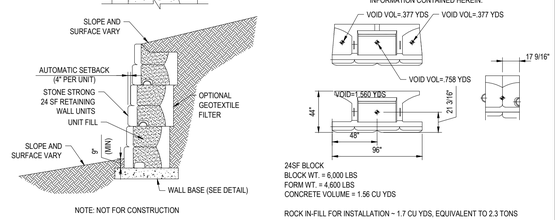

NOTE: NOT FOR CONSTRUCTION

24SF BLOCK
BLOCK WT. = 6,000 LBS
FORM WT. = 4,600 LBS
CONCRETE VOLUME = 1.56 CU YDS

ROCK IN-FILL FOR INSTALLATION ~ 1.7 CU YDS, EQUIVALENT TO 2.3 TONS

GRAVITY WALL CROSS SECTION (FOR GRAPHICAL PURPOSES ONLY)

N.T.S.

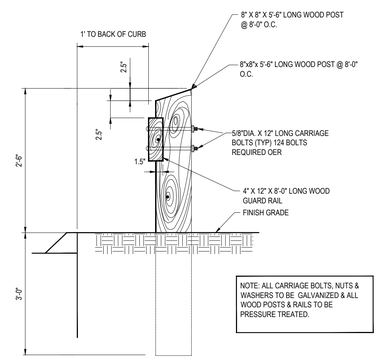

NOTE: ALL CARRIAGE BOLTS, NUTS & WASHERS TO BE GALVANIZED & ALL WOOD POSTS & RAILS TO BE PRESSURE TREATED.

WOOD GUIDERAIL DETAIL

N.T.S.

CVS pharmacy

RELO

STORE NUMBER: 706

400 MASSACHUSETTS AVENUE
ACTON, MA

PROJECT TYPE: RELO
DEAL TYPE: TK

CS PROJECT NUMBER: 65315

ARCHITECT OF RECORD:

BKA Architects, Inc.
Architecture + Interiors
142 Crescent Street
Brockton, MA 02302
tel : 508.583.5603
fax : 508.584.2914
e-mail : bka@bkaarchs.com

CIVIL CONSULTANT:

BOHLER ENGINEERING
352 TURNPIKE ROAD
SOUTHBOROUGH, MA 01772
Phone: (508) 480-9900
Fax: (508) 480-9080
www.BohlerEngineering.com

DEVELOPER:

TRB We Build Trust.
TRB DEVELOPMENT GROUP, INC.
36 LONDONDERRY TURNPIKE
HOOKSETT, NH 03106
TEL : 603-669-8500

W.D. GOEBEL
PROFESSIONAL ENGINEER
MASSACHUSETTS LICENSE No. 42644
RHODE ISLAND LICENSE No. 7268
CONNECTICUT LICENSE No. 21854
NEW HAMPSHIRE LICENSE No. 10289
MAINE LICENSE No. 9490
NEW YORK LICENSE No. 071284-1
FLORIDA LICENSE No. 66202

REVISIONS

REV:	DATE:	COMMENT:	BY:
1	07/08/13	REV. PER TOWN STAFF COMMETS	CFD

CHECKED BY: JGS

DRAWN BY: KBS

DATE: 01/25/13

JOB NUMBER: W121033

TITLE: CONSTRUCTION DETAIL SHEET

SHEET NUMBER: 14

COMMENTS: NOT FOR CONSTRUCTION

P:\121W11033\DWG\W121033SI.dwg, 14-Details, 4/23/2010, 10:17:14 AM, cmerion, Xerox5310-1.pc3, User:634, 1.0/999999%