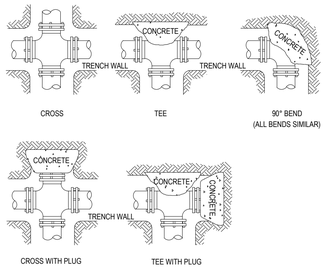

NOTES:
1. DO NOT COVER BELLS OR FLANGES WITH CONCRETE
2. WRAP ALL FITTINGS WITH VISQUEEN.
3. BACK ALL TEES ACCORDING TO SIZE OF BRANCH.
4. BACKING FUTURE LINE EXTENSIONS SHALL BE SUCH THAT LATER REMOVAL IS POSSIBLE.
5. ALL BENDS WHERE FITTINGS ARE USED, BOTH HORIZONTAL OR VERTICAL SHALL BE BACKED.
6. REACTION BACKING TABLE IS BASED ON 100 P.S.I. AND SOIL BEARING PRESSURE OF 2000 LB./SQ.FT. ADDITIONAL BACKING MAY BE REQUIRED IN SOME AREAS AS DIRECTED BY ENGINEERS.
7. ALL CONCRETE SHALL BE 2500 P.S.I.
8. 18" AND LARGER REQUIRES SPECIFIC ANTI-THRUST DESIGN.

HORIZONTAL THRUST BLOCKING					
(BLOCKING HEIGHT GREATER THAN PIPE O.D.) (BLOCKING WIDTH BETWEEN 1 & 2 TIMES HEIGHT)					
REQUIRED SQ. FT. OF UNDISTURBED EARTH WALL FOR REACTION BACKING					
TYPE OF FITTINGS					
PIPE SIZE	TEE & PLUG	BENDS			
		90°	45°	22 1/2°	11 1/4°
3"	1.0	1.0	1.0	1.0	1.0
4"	1.0	1.0	1.0	1.0	1.0
6"	1.5	2.0	1.0	1.0	1.0
8"	2.5	3.5	1.8	1.0	1.0
10"	4.0	5.5	2.8	1.5	1.0
12"	6.0	8.0	4.0	2.0	1.5

HORIZONTAL THRUST BLOCKING

N.T.S.

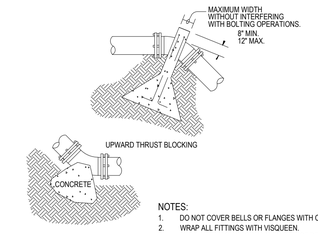

NOTES:
1. DO NOT COVER BELLS OR FLANGES WITH CONCRETE
2. WRAP ALL FITTINGS WITH VISQUEEN.
3. BACK ALL TEES ACCORDING TO SIZE OF BRANCH.
4. BACKING FUTURE LINE EXTENSIONS SHALL BE SUCH THAT LATER REMOVAL IS POSSIBLE.
5. ALL BENDS WHERE FITTINGS ARE USED, BOTH HORIZONTAL OR VERTICAL SHALL BE BACKED.
6. REACTION BACKING TABLE IS BASED ON 100 P.S.I. AND SOIL BEARING PRESSURE OF 2000 LB./SQ.FT. ADDITIONAL BACKING MAY BE REQUIRED IN SOME AREAS AS DIRECTED BY ENGINEERS.
7. ALL CONCRETE SHALL BE 2500 P.S.I.
8. 18" AND LARGER REQUIRES SPECIFIC ANTI-THRUST DESIGN.

UPWARD THRUST BLOCKING												
(REQUIRED REINFORCING BARS & CUBIC YARDS OF P.C. CONCRETE												
	90° BEND			45° BEND			22 1/2° BEND			11 1/4° BEND		
PIPE SIZE	CONC. C.Y.	REINF		CONC. C.Y.	REINF		CONC. C.Y.	REINF		CONC. C.Y.	REINF	
		QTY	SIZE		QTY	SIZE		QTY	SIZE		QTY	SIZE
6"	1.5	3	5	1.5	3	5	1.25	2	5	1.25	2	5
8"	2	3	5	2	3	5	1.5	2	5	1.5	2	5
10"	2.5	3	5	2.5	3	5	2	3	5	2	3	5
12"	3	3	5	3	3	5	2.5	3	5	2.5	3	5

VERTICAL THRUST BLOCKING

N.T.S.

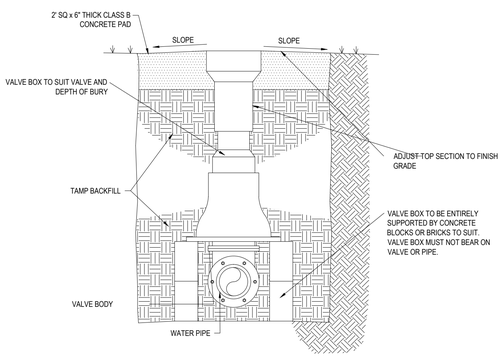

GATE VALVE

N.T.S.

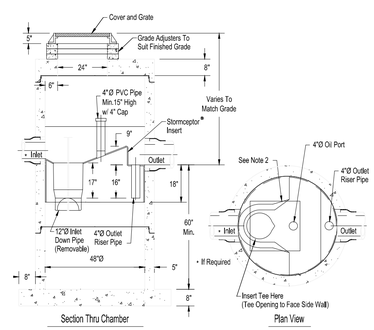

Notes:
1. The Use Of Flexible Connection is Recommended at The Inlet and Outlet Where Applicable.
2. The Cover Should be Positioned Over The Inlet Drop Pipe and The Oil Port.
3. The Stormceptor System is protected by one or more of the following U.S. Patents: #4985148, #5498331, #5725760, #5753115, #5849181, #6068765, #6371690.
4. Contact a Concrete Pipe Division representative for further details not listed on this drawing.

STORMCEPTOR 450i

N.T.S.

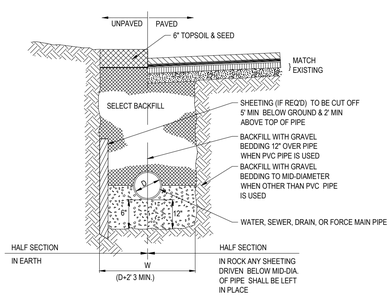

TYPICAL UTILITY TRENCH

N.T.S.

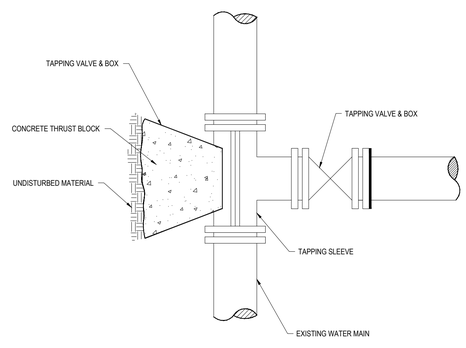

(DETAIL FOR GENERAL PURPOSES. GC TO COORDINATE CONNECTION W/ ACTON WATER DEPARTMENT)

TAPPING SLEEVE & GATE VALVE DETAIL

N.T.S.

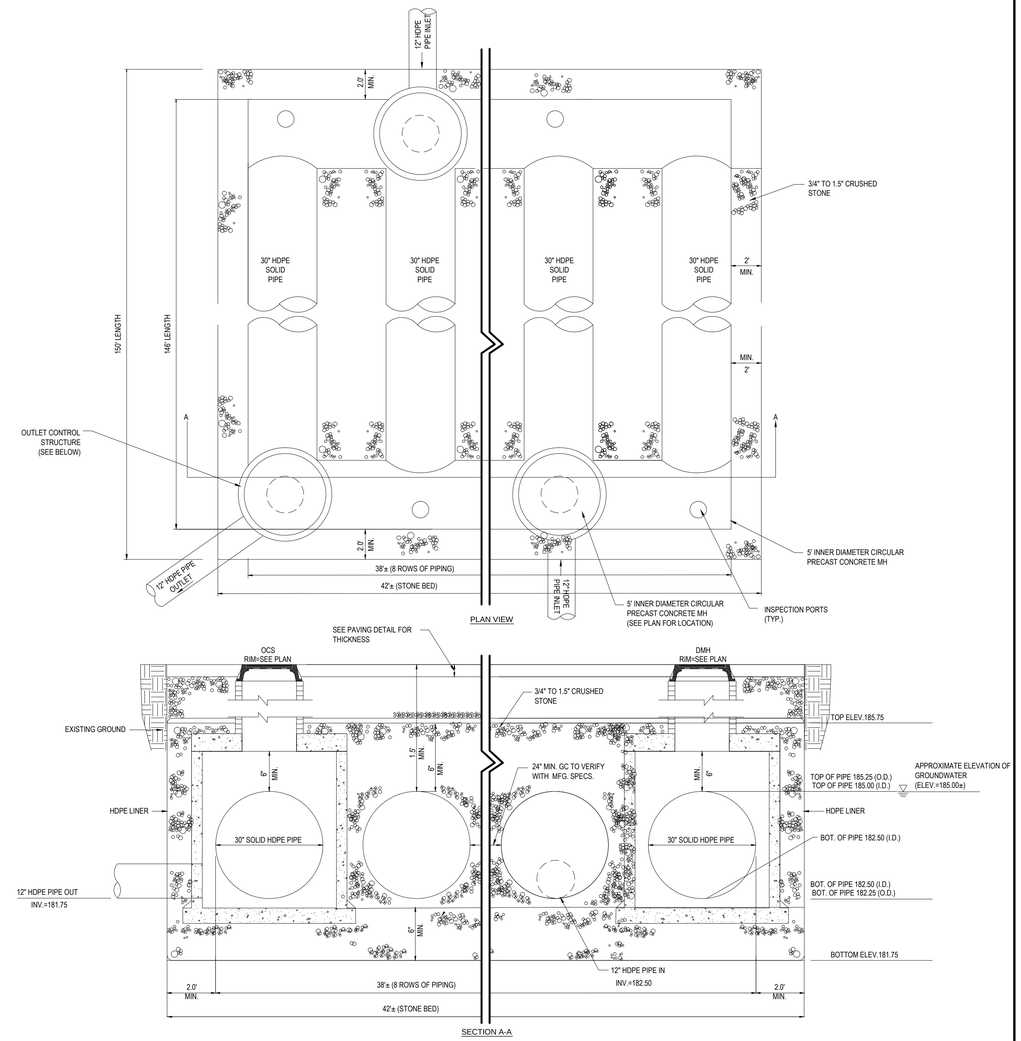

NOTE
ALL PIPE SHALL BE MANUFACTURED BY ADS OR APPROVED EQUAL. INSTALLATION METHODS & MATERIALS SHALL COMPLY WITH MANUFACTURER'S SPECIFICATIONS.

UNDERGROUND STORAGE SYSTEM

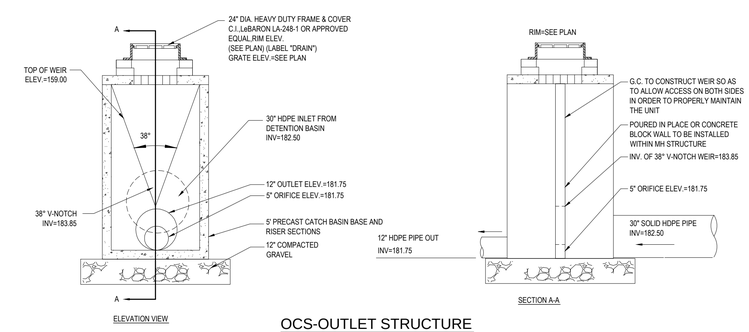

OCS-OUTLET STRUCTURE

UNDERGROUND DRAINAGE SYSTEM

N.T.S.

CVS pharmacy

RELO

STORE NUMBER: 706
400 MASSACHUSETTS AVENUE
ACTON, MA

PROJECT TYPE: RELO
DEAL TYPE: TK

CS PROJECT NUMBER: 65315

ARCHITECT OF RECORD:
BKA Architects, Inc.
Architecture + Interiors
142 Crescent Street
Brockton, MA 02302
tel : 508.583.5603
fax : 508.584.2914
e-mail : bka@bkaarchs.com

CIVIL CONSULTANT:
BOHLER ENGINEERING
352 TURNPIKE ROAD
SOUTHBOROUGH, MA 01772
Phone: (508) 480-9900
Fax: (508) 480-9080
www.BohlerEngineering.com

DEVELOPER:
TRB We Build Trust.
TRB DEVELOPMENT GROUP, INC.
36 LONDONDERRY TURNPIKE
HOOKSETT, NH 03106
TEL : 603-669-8500

W.D. GOEBEL
PROFESSIONAL ENGINEER
MASSACHUSETTS LICENSE No. 42644
RHODE ISLAND LICENSE No. 7268
CONNECTICUT LICENSE No. 21854
NEW HAMPSHIRE LICENSE No. 10289
MAINE LICENSE No. 9490
NEW YORK LICENSE No. 071284-1
FLORIDA LICENSE No. 66202

REVISIONS

REV:	DATE:	COMMENT:	BY:
1	07/08/13	REV. PER TOWN STAFF COMMETS	CFD

CHECKED BY:	JGS
DRAWN BY:	KBS
DATE:	01/25/13
JOB NUMBER:	W121033

TITLE: CONSTRUCTION DETAIL SHEET

SHEET NUMBER: 15

COMMENTS: NOT FOR CONSTRUCTION

P:\121W121033\DWG\W121033S1.dwg , 15-Details, 4/3/2013 , 10:37:14 AM , mmcnic , Xerox5100 , pc3 , User&N , 1.0999999