May 22, 2006

Forest Service Trail Accessibility Guidelines

FSTAG

Contents

Executive Summary

Preamble:

Background and Development: Why these guidelines and why now?

A Section by Section Analysis that explains in detail each portion of the FSTAG.

FSTAG -Technical Provisions:

Contains the scoping requirements, technical specifications and all definitions.

Appendices:

A. Overview of FSTAG Implementation Process:.

A flowchart on how to apply the FSTAG one step at a time.

(Best if printed in color.)

B. FS and ITDS Trail Management Classes

C. FS and ITDS Trail Planning and Management Fundamentals

D. Forest Service Recreation Site Development Scale Definitions

E. Citations from Forest Service Outdoor Recreation Accessibility Guidelines (FSORAG)

F. Architectural Barriers Act Accessibility Standards Citations Referenced in FSTAG Technical Provisions

USDA Forest Service
Trail Accessibility Guidelines

Executive Summary

The Forest Service Trail Accessibility Guidelines (FSTAG) provide guidance for maximizing accessibility of trails in the National Forest System, while recognizing and protecting the unique characteristics of their natural setting. The FSTAG applies only to trails in the National Forest System that (1) are new or altered; (2) have a designed use of hiker/pedestrian under the Interagency Trail Data Standards (ITDS) and Forest Service Trail Planning and Management Fundamentals; and (3) connect directly to a currently accessible trail or a trailhead. Appropriate application of the FSTAG will ensure that the full range of trail opportunities continues to be provided, from primitive long-distance trails to highly developed trails and popular scenic overlooks. All Forest Service and ITDS trail classes will remain unchanged.

The FSTAG integrates the Forest Service policy of universal design (Forest Service Manual 2330.5) to ensure the integration of all people, to the greatest extent possible, without separate or segregated access for people with disabilities. Under the Forest Service's universal design policy, with few exceptions, all new or altered facilities and associated constructed features at recreation sites must comply with the technical provisions of the FSTAG, rather than only a certain percentage of those facilities.

The FSTAG is based on draft guidelines for outdoor developed areas created by a regulatory negotiation committee (Reg Neg Committee) established by the Architectural and Transportation Barriers Compliance Board (Access Board).

Like the Reg Neg Committee's draft guidelines, the FSTAG establishes one level of accessibility. The uniqueness of each trail is preserved through the use of conditions for departure and exceptions from the guidelines, when application of a technical provision would cause a change in a trail's setting or the purpose or function for which a trail was designed.

The FSTAG probably will not apply to most portions of existing primitive, long-distance trails. However, the FSTAG may apply to some segments of those trails, such as where they pass through a more developed area. The FSTAG contains exceptions that will prevent accessibility from being pointlessly applied in a piecemeal fashion along a trail when access between trail segments is not possible. The FSTAG also contains requirements to provide accessibility to special features where possible.

The Access Board is preparing to publish the Reg Neg Committee's draft guidelines for public notice and comment. The Access Board's guidelines will apply to federal

agencies subject to the Architectural Barriers Act. When the Access Board finalizes its accessibility guidelines for outdoor developed areas, the Forest Service will revise the FSTAG to as needed to incorporate the Access Board's standards, where those provisions are a higher standard, as supplemented by the Forest Service. The supplementation will ensure the agency's application of equivalent or higher guidelines and universal design, as well as consistent use of agency terminology and processes.

Preamble

The preamble provides background on the FSTAG, beginning with the Forest Service's development of universal design guidelines for outdoor recreation areas. The preamble also addresses applicability of the FSTAG, including a discussion of alteration versus maintenance, and provides a detailed explanation of the FSTAG's key provisions.

The FSTAG contains 11 technical provisions that apply to trails or trail segments in the National Forest System that (1) are new or altered (an alteration is a change in the original purpose, intent, or design of a trail); (2) have a designed use of hiker/pedestrian under the ITDS and Forest Service Trail Planning and Management Fundamentals; and (3) connect directly to an accessible trail or to a trailhead. For purposes of the FSTAG, a trailhead is a site designed and developed by the agency, a trail association, a trail maintaining club, trail partners, or other cooperators to provide staging for trail use. For purposes of the FSTAG the following do not constitute a trailhead: (1) junctions between trails where there is no other access and (2) intersections where a trail crosses a road or users have developed an access point, but no improvements have been provided by the Forest Service, a trail association, a trail maintaining club, trail partners, or other cooperators beyond minimal signage for public safety.

The FSTAG contains a definitions section and enumerates four conditions for departure and exceptions that provide for deviation from the technical provisions. Appendix A includes an overview of the FSTAG implementation process, which provides a graphic summary of the key FSTAG steps and process sequencing. Appendix B contains the ITDS trail classes. Appendix C contains the ITDS summary of trail designed use and managed use and the Forest Service Trail Planning and Management Fundamentals. Appendix D contains the technical provisions from the Forest Service Outdoor Recreation Accessibility Guidelines that are referenced in the FSTAG. Appendix E contains the provisions from the Architectural Barriers Act Accessibility Standards that are referenced in the FSTAG.

Background

The Architectural Barriers Act of 1968 (ABA) and Section 504 of the Rehabilitation Act of 1973 (Section 504) require newly constructed or altered facilities to be accessible, with few exceptions. The applicable standard for new construction and alteration of Forest Service facilities under these laws is the Architectural Barriers Act Accessibility Standards (ABAAS).

While Chapter 10 of the ABAAS addresses some recreation facilities, including boating and fishing facilities, swimming pools, play areas, sports arenas, miniature golf courses, and amusement parks, the ABAAS does not address camping and picnicking areas and elements, outdoor recreation access routes, beach access routes, and pedestrian hiking trails.

Since the late 1980s, the USDA Forest Service (Forest Service) has been committed to the development of accessibility guidelines that protect the unique characteristics of the natural setting. In 1993, the Forest Service developed and implemented the *Universal Access to Outdoor Recreation: A Design Guide* (*Design Guide*), which contains accessibility guidelines for the outdoor recreation environment.

The applicability of the provisions in the *Design Guide* was based on the Forest Service's recreation opportunity spectrum (ROS). Under this approach, the degree of modification for accessibility in a given area reflects that area's level of development, resulting in a spectrum of opportunities for all people with the diversity of challenge and risk that is inherent in the outdoor recreation environment. The *Design Guide* also incorporated the universal design policy of developing programs and facilities to serve all people, to the greatest extent possible. The goal of universal design is to ensure integration of all people, without separate or segregated access for people with disabilities. Under the Forest Service's universal design policy, new or altered facilities and associated constructed features in recreation areas are required to be accessible, rather than only a certain percentage of those facilities, with few exceptions.

The Forest Service presented the *Design Guide* to the Access Board, the federal agency responsible for accessibility guidelines and for enforcement of the ABA. The Access Board established a Recreation Access Advisory Committee (RAAC) in July 1993 to develop additional recreation-oriented provisions for the federal accessibility guidelines. The RAAC issued a report in July 1994 that addressed the various types of recreation facilities and identified the features of each type that were not addressed by the current federal accessibility guidelines. The RAAC made recommendations for developing accessibility guidelines for those facilities.

The Access Board published an advance notice of proposed rulemaking in September 1994 requesting public comment on the RAAC's recommendations. The public comments expressed support for many of the recommendations. However, the public comments also revealed a lack of consensus among interested parties on some major issues regarding outdoor developed areas. Consequently, the Access Board decided to develop proposed accessibility guidelines for outdoor developed areas through a regulatory negotiation process. The Forest Service was one of the 24 members of the Regulatory Negotiation Committee on Outdoor Recreation Developed Areas (Reg Neg Committee).

The Reg Neg Committee's scope of work included outdoor recreation access routes, beach access routes, camping and picnicking areas and elements, and pedestrian hiking trails. The Reg Neg Committee determined that the applicability of its guidelines would not be based on the ROS. Rather, the Reg Neg

Committee's guidelines would apply regardless of the setting, unless one or more conditions for departure existed and an exception applied for a specific technical provision. Further, the Reg Neg Committee's guidelines would not integrate a universal design policy.

In 1999, the Reg Neg Committee issued draft accessibility guidelines for outdoor recreation facilities and trails. While awaiting completion of the rulemaking process for these guidelines, the Forest Service began developing internal guidelines for both trails and outdoor recreation facilities that would apply only in the National Forest System and that would comply with the public notice and comment process for Forest Service directives pursuant to 36 CFR Part 216. The agency took this step to provide a consistent and reliable method for designing accessible outdoor recreation facilities and trails pending promulgation of the Access Board's guidelines. The Forest Service's guidelines are based on the Reg Neg Committee's draft guidelines. The Forest Service's guidelines are in two parts: the Forest Service Outdoor Recreation Accessibility Guidelines (FSORAG) and the Forest Service Trail Accessibility Guidelines (FSTAG).

In 2006, the Access Board plans to publish for public notice and comment the Reg Neg Committee's draft guidelines for outdoor developed areas managed by federal agencies. The Forest Service and the other federal land management agencies will work with the Access Board as it develops final accessibility guidelines for outdoor developed areas. The final FSTAG and FSORAG will incorporate the Access Board's standards, as supplemented by the Forest Service. The supplementation will ensure the agency's application of equivalent or higher guidelines and universal design, as well as consistent use of agency terminology and processes.

The FSTAG integrates the universal design policy contained in the *Design Guide*. For example, the FSTAG requires that signs be posted at the trailhead of new or altered trails and trail segments, as well as at the trailhead of trails that have been evaluated for accessibility, to provide information to all users concerning grade, width, and other characteristics that affect accessibility.

To deal specifically and in depth with trail-related issues, the Forest Service developed the FSTAG as a separate document from the FSORAG. The FSORAG addresses accessibility for campgrounds, picnic areas, outdoor recreation access routes, beach access routes, benches, trash, recycling, and essential containers, viewing areas at overlooks, telescopes and periscopes, mobility device storage, pit toilets in general forest areas, warming huts, and outdoor rinsing showers, and other constructed features associated with outdoor recreation areas. Both the FSTAG and the FSORAG are available at www.fs.fed.us/recreation/programs/accessibility.

The FSTAG integrates Forest Service trail terminology and policy. The Forest Service Trail Planning and Management Fundamentals, which mirror the ITDS, are available at the Forest Service Recreation Integrated Business Management website at www.fs.fed.us/r3/measures/TR.htm.

The FSTAG also references trail classes. A trail manager determines the applicable trail class by referring to the Forest Service and ITDS Trail Class Matrix that is included in Appendix B of the FSTAG and is posted on the agency's trails website at http://www.fs.fed.us/r3/measures/Inventory/trails%20files/Trail_Class_Matrix_1_31 2005.doc.

On February 17, 2005, the Forest Service published in the *Federal Register* for public notice and request for comments on the proposed directive to Forest Service Manual (FSM) 2350 that would require compliance with the FSTAG. On May 22, 2006, the Forest Service published, in the *Federal Register* (Volume 71, Number 98), notice of the final directive that requires compliance with the FSTAG, effective on that date. In the notice for the final directive, the agency also responded to the comments made on the proposed directive and noted the changes to the FSTAG made in response to comments.

The Forest Service will work closely with its many partners in implementing the FSTAG and FSORAG. The agency understands that some aspects of implementation may prove challenging, particularly with regard to expense, design expertise, and labor. The Forest Service is committed to assisting its partners in implementing the FSTAG and FSORAG.

Development of the FSTAG

The FSTAG was developed jointly by Forest Service trail and accessibility specialists to integrate with the Forest Service's trail program and the ITDS. The FSTAG was drafted by a committee of USDA employees consisting of Jaime Schmidt, the National Trail Information Manager; Ruth Doyle, Santa Fe National Forest Landscape Architect and Assistant Recreation Staff Officer, the Forest Service representative on the Reg Neg Committee, and the primary Forest Service author of the *Design Guide*; Peter Irvine, Trails Coordinator; Janet Zeller, the National Accessibility Program Manager; Jim Miller, the National Trails Program Manager; James Schwartz, National Trails Coordinator; Ellen Hornstein, Attorney Advisor, Office of the General Counsel, Natural Resources Division, and Gail van der Bie, Deputy Director of the Recreation and Heritage Resources Staff. The FSTAG was reviewed by the Forest Service Trails Development Team and the Regional Recreation Access Coordinators, as well as other agency employees and trail partners.

Purpose of the FSTAG

The purpose of the FSTAG is to provide guidance for maximizing accessibility, while protecting the unique characteristics of the natural setting. Specifically, the FSTAG:

- Protects forest resources and the environment.
- Preserves the recreation experience.
- Provides for equality of recreation opportunities.
- Maximizes accessibility.

- Is reasonable.
- Addresses public safety.
- Provides guidance.
- Is enforceable and measurable.
- Is based on independent use by persons with disabilities.
- Complies with the ABA, Section 504, and, to the greatest extent possible, current federal accessibility guidelines and standards.
- Integrates the Forest Service's universal design and trail policies.

Definitions

All trail-related definitions used in the FSTAG are from the ITDS and the Forest Service Trail Planning and Management Fundamentals.

Wheelchair Dimensions and Reach Ranges

The FSTAG bases standards for trail construction and alteration on wheelchair dimensions and reach ranges in the ABAAS.

SECTION-BY-SECTION ANALYSIS

SECTION 7.1 APPLICABILITY

The FSTAG applies only to trails in the National Forest System that are (1) new or altered; (2) have a designed use of hiker/pedestrian under the ITDS and Forest Service Trail Planning and Management Fundamentals; and (3) connect directly to an accessible trail or to a trailhead.

Alteration

An alteration is a change in the original purpose, intent, or design of a trail.

If a facility was constructed by a federal agency after 1968 or by any other entity after 1990, that facility had to be constructed in compliance with applicable accessibility standards that were in effect at the time of construction. If the facility is not accessible, when it is altered it must be brought into compliance with applicable accessibility requirements.

The Forest Service recognizes that not all the facilities it administers comply with this requirement. Since the early 1990s, the agency has been working hard to ensure that all new and altered facilities comply with applicable accessibility requirements. The agency also has developed transition plans to bring facilities that are not accessible into compliance.

Designed Use of Hiker/Pedestrian

A trail may be managed for multiple uses, such as cycling, horseback riding, and hiking. However, according to the ITDS and Forest Service Trail Planning and

Management Fundamentals, each trail or trail segment has only one designed use (*i.e.,*.the managed use of a trail that requires the most demanding design, construction, and maintenance parameters). Since the FSTAG applies to construction and alteration of trails, rather than to management of trails, the FSTAG applies to trails with a designed use, rather than a managed use, of hiker/pedestrian.

Connection to an Accessible Trail or to a Trailhead

The FSTAG takes into consideration a newly constructed or altered trail located in a remote area that connects to a trail that is not accessible. To address this concern, section 7.0 provides that the technical provisions apply only to new or altered trails and trail segments that connect directly to an accessible trail or to a trailhead. For purposes of the FSTAG, a trailhead is a site designed and developed by the Forest Service, a trail association, a trail maintaining club, a trail partner, or other cooperators to provide staging for trail use.

Maintenance

Trail maintenance is not subject to the FSTAG. Maintenance is routine or periodic repair of trails or trail segments to restore them to the standards to which they were originally designed and built. In contrast to alteration, maintenance does not change the original purpose, intent, or design of a trail.

Maintenance includes but is not limited to:

- Removal of debris and vegetation, such as downed trees or broken branches on a trail; clearing trail of encroaching brush or grasses; and removing rock slides.

- Maintenance of trail tread, such as filling ruts and entrenchments; reshaping a trail bed; repairing a trail surface and washouts; installing rip rap (rock placed to retain cut and fill slopes); and constructing retaining walls or cribbing to support trail tread.

- Erosion control and drainage; replacing or installing necessary drainage structures, such as drainage dips, water bars, or culverts; and realigning sections of trail to deter erosion or avoid boggy areas.

- Repair of trail or trailhead structures, including replacing deteriorated, damaged, or vandalized parts of structures, such as sections of bridges, boardwalks, information kiosks, fencing, and railings; painting; and removing graffiti.

Trail maintenance is completed in accordance with the standards established for each trail based on its trail management objectives. While accessible trails are likely to fall within a trail class that provides for more frequent maintenance, there may be times when a trail segment is not accessible due to normally occurring conditions in the outdoor environment, such as fallen branches. Routine

maintenance of an accessible trail does not have to occur more frequently solely because the trail was constructed in compliance with the FSTAG.

While the FSTAG does not apply to trail maintenance, the Forest Service policy is to improve accessibility wherever possible. Trail designers and managers should take advantage of opportunities to improve accessibility in maintaining a trail that has a designed use of hiker/pedestrian.

The term "reconstruction" is not used in federal accessibility guidelines or the FSTAG, even though it is frequently used in the trails community. For the purposes of the FSTAG, actions are categorized as construction, alteration, or maintenance.

An Outdoor Recreation Access Route (ORAR) Versus a Trail

An ORAR is a continuous, unobstructed path designated for pedestrian use that connects elements at a recreation site such as a picnic area, campground area, or trailhead. In contrast, a trail is a route that is designed, constructed, or designated for recreational pedestrian use or provided as an pedestrian alternative to vehicular routes within a transportation system. Thus, a trail is not an ORAR and does not have to comply with the technical provisions for ORARs in section 2.0 of the FSORAG.

Associated Constructed Feature

In the FSTAG, the term "associated constructed feature" in relation to trails includes shelters, toilets, and other structures that provide support for trail users. To comply with the ABA and Section 504 requirement that new or altered facilities be accessible, the FSTAG requires associated constructed features to comply with the FSORAG.

These associated constructed features must be designed appropriately for the setting and in compliance with the FSTAG to ensure that the facility can be used for its primary purpose by all hikers, including hikers with disabilities. Illustrations of this principle follow.

- Pit toilet with no walls in a general forest area (GFA). The total height of the toilet seat and the riser it sits on must be 17 to 19 inches above the ground or floor. A clear floor or ground space complying with section 6.6.6 of the FSORAG must be provided adjacent to the riser. Since walls are not provided, grab bars are not required.

- Trail shelter or lean-to with three walls in a GFA. Where the constructed finished floor elevation is above the ground, the shelter or lean-to must be located so that at least one section of the floor on the open side of the shelter is 17 to 19 inches above the ground to facilitate transfer from a wheelchair.

- Bench. If a bench is provided along a trail, the bench must comply with section 6.1 of the FSORAG.

Specifications for tent pads and pit toilets constructed in GFAs are contained in sections 5.2 and 6.6 of the FSORAG. For convenience, the FSORAG technical provisions cited in the FSTAG and the section-by-section analysis of each are included in Appendix D of the FSTAG.

In GFAs, the path connecting associated constructed features, as well as the path connecting them to a trail, must comply with section 7.0 of the FSTAG. These paths are not ORARs and are not required to meet the technical provisions for an ORAR in the FSORAG.

Wheelchair Access

A wheelchair or mobility device, including one that is battery-powered, is a device that is designed solely for use by a mobility-impaired person for locomotion and that is suitable for use in an indoor pedestrian area (Title V, sec. 507c, of the ADA; 36 CFR 212.1). "Designed solely for use by a mobility-impaired person for locomotion" means that the wheelchair was designed and manufactured solely for use for mobility by a person with a disability. Thus, this term does not include a motorized unit that has been retrofitted to make it usable by a person with a disability. "Suitable for use in an indoor pedestrian area" means usable inside a home, mall, courthouse, or other indoor pedestrian area.

A disabled person who requires use of a wheelchair or mobility device may use a wheelchair or mobility device that meets the definition in the preceding paragraph anywhere foot travel is permitted (FSM 2353.05 and Title V, sec. 507c, of the ADA). Wheelchairs and mobility devices are not defined as motor vehicles under Forest Service regulations (36 CFR 212.1). A motor vehicle cannot be used on National Forest System trails that are designated only for non-motorized use.

While the FSTAG does not require widening or flattening of primitive trails that would change their setting or purpose, in the coming years wheelchairs and other assistive medical technology will continue to change. It is likely that wheelchairs that meet the definition in the agency's regulations will be able to travel across narrow, steep terrain and not be dependent on firm and stable surfaces or electrical plug-in recharging. Individuals with disabilities utilizing these devices will access primitive areas and will expect to be able to use the toilet that has been constructed at that location. Even now, using the current technology of non-motorized wheelchairs and crutches, individuals with limited mobility are choosing to hike to mountain summits via non-accessible trails. These hikers are also utilizing the accessible toilets and shelters along those trails. Accordingly, under the Forest Service's accessibility guidelines, the door of a toilet structure must be at least 32 inches wide when opened fully, and its interior must meet minimum specifications.

Wheelchair Access to Non-Motorized Trails

Nothing in these guidelines permits the use of a motor vehicle on a National Forest System trail that is not designated for motor vehicle use. To prevent motor use on non-motorized trails, gates, rocks, berms, posts, or other restrictive devices may be placed at a trailhead. However, under Section 504, an individual may not be denied participation in a federal program that is open to all other people. Thus, when foot travel is encouraged beyond a restrictive device, as it is at a trailhead, at least 32 inches of clear passage must be provided around or through the device to ensure that a person who uses a wheelchair can use the trail beyond the restriction. A 32-inch minimum width has been deemed sufficient because it is the minimum width required for a door under the ABAAS. Where foot travel is not encouraged but is permitted beyond a restrictive device, if a disabled individual expresses a need to access the area beyond the restrictive device, the administrative unit must work with that individual to provide access around the restriction. If a trail beyond a restrictive device does not meet the criteria for the FSTAG to apply, there is no requirement to make that trail accessible simply because there is clear passage of 32 inches around or through the device.

Puncheon, Boardwalks, and Trail Bridges

Puncheon, boardwalks, and trail bridges are trail constructed features and part of the trail tread, since they must be constructed in accordance with the width and other features of the trail. Thus, if a segment of a trail designed for hiker/pedestrian use is subject to the FSTAG's technical provisions, the puncheon and bridges on that trail segment are also subject to the FSTAG's technical provisions.

On any trail actively managed for pedestrian snow use (*i.e.*, for snow-shoeing or cross-country skiing), trail bridge widths must accommodate passage by the intended users. For example, if a trail is managed for cross-country skiing, the bridges must be wide enough to provide safe passage by the skiers.

Section 7.1.1 Conditions for Departure

Complying with the FSTAG will not always result in trails that are accessible to all persons with disabilities. Characteristics of the natural environment, such as terrain, soils, and hydrology, could prevent compliance with some of the FSTAG's technical provisions.

Allowing some deviation is essential, as the outdoor environment is very different from a constructed indoor environment. Factors that influence the ability to provide fully accessible facilities, such as soil, surrounding vegetation, hydrology, terrain, and surface characteristics, are fundamental to outdoor areas. Without deviations from the technical provisions, compliance could significantly and unacceptably alter the nature of the outdoor experience.

Deviations are permitted from certain technical provisions of the FSTAG where one or more of four conditions for departure exist and an exception applies. Section 7.1.1 does not provide a blanket exemption from the technical provisions.

Rather, each technical provision must be examined to determine whether a condition for departure exists and an exception applies that would permit deviation from that provision.

Section 7.1.1 authorizes deviation from specific technical provisions due to the presence of a site-specific condition. When that site-specific condition no longer exists, the technical provision reapplies. For example, if complying with the provision for clear tread width would cause substantial harm to a significant natural feature, a condition for departure and an exception apply that would permit deviation from the provision. Although a deviation from the clear tread width provision would be permitted where the trail passes that feature, the other technical provisions would still apply at that point. Once the trail passes that feature, the technical provision for clear tread width would reapply.

The following are the four conditions for departure that permit deviations from specific technical provisions where an exception applies.

1. **Where compliance would cause substantial harm to cultural, historic, religious, or significant natural features or characteristics.**

A significant natural feature may include a large rock, outcrop, tree, vegetation, or body of water that is regarded as distinctive or important locally, regionally, or nationally. Significant natural features also could include areas protected under federal or state laws, such as areas with threatened or endangered species or wetlands that could be threatened or destroyed by full compliance with the technical provisions, or areas where compliance would directly or indirectly substantially harm natural habitat or vegetation.

Significant cultural features include areas such as archaeological sites, sacred lands, burial grounds and cemeteries, and protected tribal sites. Significant historical features include properties listed or eligible for listing in the National Register of Historic Places or other places of recognized historic value. Significant religious features include sacred tribal sites and other properties held sacred by an organized religion.

If the significant feature would be directly or indirectly altered, destroyed, or otherwise negatively impacted by construction of the outdoor recreation facility or element in the process of providing accessibility, this condition for departure would apply.

When determining whether substantial harm would be incurred by the proposed change, consider only the additional impact of increasing the size, relocating the feature, or other change necessary to provide accessibility. This condition for departure does not apply where substantial impact will result from construction of non-accessible features and only a little more impact is due to construction directly related to accessibility.

For example, there may be concern about the number of wildflower plants being

removed on cut and fill slopes for an accessible trail along the side of a hill, where the plants are an uncommon species for which the surrounding river drainage and a nearby town are named. The trail construction would destroy most of the flowers, as well as the meadow that provides their habitat. This condition for departure would not apply if 300 square feet must be disturbed to make way for a non-accessible trail and only another 80 square feet must be removed to provide an accessible trail. The majority of the proposed damage to the wildflowers is not attributable to compliance with accessibility requirements. In this case, an alternate location should be selected for the trail.

2. **Where compliance would substantially change the physical or recreation setting or the trail class, designed use, or managed uses of the trail or trail segment or would not be consistent with the applicable land management plan.**

Examples include a trail intended to provide a rugged experience, such as a cross-country training trail with a steep grade or a challenge course with abrupt and severe changes in level. If these types of trails were flattened out or otherwise constructed to comply with the technical provisions for accessible trails, they would not provide the desired level of challenge to users. Trails that traverse boulders and rock outcroppings are another example. The purpose of such a trail is to provide people with the opportunity to climb the rocks. To remove the obstacles along the way or reroute the trail around the rocks would destroy the purpose of the trail. The nature of the setting may also be compromised by actions such as widening for placement of an imported surface on a trail in a remote location or removing ground vegetation in meadows or alpine areas.

Compliance with the technical provisions of the FSTAG should not change the nature of the recreation opportunities provided. Further, compliance with the FSTAG should not negatively impact the unique characteristics of the natural setting, which prompt people to recreate in the outdoor rather than the indoor environment. People using primitive trails, for example, often experience the outdoor environment in a more natural state, with limited or no development. Evidence of manufactured building materials or engineered construction techniques in such a setting can change its primitive character and therefore the user's experience. In these settings, people are generally looking for a higher degree of challenge and risk where they can use their outdoor and survival skills. The Forest Service's firm position is that the fundamental, primitive character of trails designed as simple footpaths must not be compromised

Compliance with the FSTAG's technical provisions, particularly those related to surface and obstacles, could destroy the natural or undeveloped nature of the setting. This condition for departure addresses these concerns.

3. **Where compliance would require construction methods or materials that are prohibited by federal, state, or local law.**

For example, use of mechanized equipment is prohibited in wilderness areas. Construction methods are limited to hand tools in those areas. Imported materials may be prohibited to maintain the integrity of the natural setting. Construction

methods and materials employed in wetlands or coastal areas are strictly limited. For traditional, historic, or other reasons, many trails are built using only native soil for surfacing, which may not be firm and stable. Federal statutes such as the Wilderness Act and the Endangered Species Act and state and local laws often impose restrictions to address environmental concerns. Many aquatic features are protected under federal or state laws. Some constructed water crossings that are required to provide accessibility may not be permitted under certain laws or regulations.

Local law has been included in this condition for departure to address situations where conservation easements or local ordinances prohibit or restrict construction methods and practices. For example, where land is purchased from farms, certain use restrictions may prohibit importation of surfacing materials.

4. Where compliance would be impractical due to terrain or prevailing construction practices.

Complying with the technical provisions, particularly those governing trail grade in section 7.3.1, in areas of steep terrain may require extensive cuts or fills that would be difficult to construct and maintain or that would cause drainage and erosion problems. Furthermore, constructing a trail on steep slopes may make it significantly longer, causing a much greater impact on the environment. Certain soils are highly susceptible to erosion. Other soils expand and contract in accordance with their water content. If compliance requires techniques that are incompatible with the natural drainage or existing soil, the trail will be difficult, if not impossible, to maintain.

This condition for departure may also apply where an obstacle or construction methods for particularly difficult terrain require the use of equipment other than that typically used throughout the length of the trail. One example is requiring the use of a bulldozer to remove a rock outcropping when hand tools are commonly used. Several of these conditions for departure are consistent with similar exceptions in the Reg Neg Committee's draft guidelines.

Compliance with the provision for a surface that is both firm and stable (section 7.3.3) might conflict with prevailing construction practices by requiring importation of surfacing material that would not otherwise have been used. For example, if prevailing construction practices do not involve importation of surfacing material and the natural surfacing material cannot be made firm and stable, it may be impossible to comply with section 7.3.3.

The phrase "would be impractical" in this condition for departure refers to what is not reasonable, rather than to what is technically infeasible. This condition for departure applies when the effort and resources required to comply would be disproportionately high relative to the level of access established. Although compliance is technically possible, the amount of effort and resources required is not reasonable. For example, it may be possible to provide a trail with a 1:20 grade (5%) or less up a 1,500-foot mountain using heavy construction equipment, but the trail would be at least 5.8 miles long (rather than 2 miles long under a

traditional backcountry layout), which could cause unacceptable environmental and visual impacts.

Trail construction practices vary greatly, from the use of volunteer labor and hand tools to professional construction with heavy, mechanized equipment. For trail alteration, "prevailing construction practices" means the methods typically used for construction of the trail. For new trails, the land manager determines the construction practices to be used on each trail. However, the choice of construction practices is primarily determined by available resources, such as machinery, skilled operators, and environmental conditions (*e.g.,* soil type and depth, vegetation, and natural slope).

The intent of this condition for departure is to ensure that compliance with the technical provisions of the FSTAG does not require the use of construction practices that are beyond the skills and resources of the organization building the trail. This condition for departure is not intended to exempt the organization building the trail from the technical provisions of the FSTAG simply because of a particular construction practice (*e.g.,* the use of hand tools) or to encourage the use of a certain construction practice to avoid compliance when more expedient methods and resources are available.

Moreover, when the Forest Service is funding a project, the agency cannot use cost as the reason for not making the project accessible, unless the cost to make that project accessible would have a significant adverse impact on the agency's appropriations.

Regardless of the amount of money that is available to the agency, consistent with the principles of the FSTAG, the natural setting should not be changed to make a trail or other area accessible. Thus, there is no requirement to use drastic measures to provide accessibility if doing so would unacceptably change the character of the setting and the recreation opportunity.

While the FSTAG addresses the special circumstances where trail designers and managers may not be able to achieve accessibility, they are always encouraged to provide access to the greatest extent possible.

Section 7.1.2 GENERAL EXCEPTIONS

A combination of factors may make it impractical to make an entire portion of a trail accessible according to the technical provisions of the FSTAG. As discussed under section 7.1.1, deviations from specific provisions are permitted where one or more conditions for departure exist and an exception applies. Once the conditions for departure no longer exist, the technical provisions must be met.

Given terrain and other environmental factors, only scattered portions of a trail or trail segment may meet all the technical provisions. Trail managers need to be able to determine whether the intent and objectives of an accessible hiking opportunity are being met on that trail. Section 7.1.2 includes two general exceptions to assist trail managers in making this determination.

Section 7.1.2.1 General Exception 1

The first general exception addresses situations where extreme, but not uncommon, environmental factors may be present along a trail that could render compliance with the technical provisions impractical. These factors, listed below, are associated with trail grade, surface, tread width, and tread obstacles.

Specifically, the first general exception provides that where one or more conditions for departure in section 7.1.1 and at least one limiting factor exist, then only that segment of trail between the trail terminus and the first limiting factor must comply with section 7.3, if that segment is more than 500 feet long. If the segment of trail between the trail terminus and first limiting factor is 500 feet or less in length, section 7.3 does not apply. However, if a prominent feature is located between the trail terminus and first limiting factor and is 500 feet or less from the trail terminus, section 7.3 applies up to the prominent feature.

The limiting factors are:

(a) The combination of trail grade and cross slope exceeds 20% for over 40 feet (6100 mm).

(b) The surface is not firm and stable for a distance of 45 feet or more.

(c) The minimum tread width is 18 inches or less for a distance of at least 20 feet.

(d) A trail obstacle of at least 30 inches (770 mm) in height extends across the full width of the trail.

The rationale for this general exception is that certain natural conditions or limiting factors can present extreme environmental barriers to many people with disabilities, making independent access across or beyond that point on the trail very difficult or impossible. Further, it may not be possible to remove or otherwise design around these limiting factors because one or more conditions for departure exist. Independent access is one of the driving principles of the FSTAG, as well as the work of the Reg Neg Committee.

To incorporate accessibility where it would have the most impact, be feasible, and provide a meaningful hiking opportunity, the Forest Service and the Reg Neg Committee determined that the distance between the trail terminus and the limiting factor had to be over 500 feet for section 7.3 to apply. If the segment between the trail terminus and limiting factor were 500 feet or less in length, section 7.3 would not apply.

However, to maximize accessible hiking opportunities, if a prominent feature is located between the trail terminus and limiting factor and is less than 500 feet from the trail terminus, section 7.3 would apply up to the prominent feature. Even if a prominent feature is close to the trail terminus, being able to experience the prominent feature would provide a meaningful, albeit short, accessible hiking

opportunity.

A prominent feature is a natural, cultural, or historic feature located along or adjacent to a trail that is determined by the trail designer or manager to have national, regional, or local distinction or significance. It may be the focal point, main attraction, or destination of the trail or it may simply be an interesting secondary feature. Examples include but are not limited to boulder outcrops, waterfalls, groupings of old or unique trees or other vegetation, vistas that may not be part of a developed overlook, and cultural or historic structures.

Section 7.1.2.2 General Exception 2

The second general exception provides that where one or more conditions for departure exist that result in deviations from the technical provisions for over 15% of the length of a trail, section 7.3 applies only to the trail segment between the trail terminus and the first point of deviation, if that segment is more than 500 feet long. If the trail segment between the trail terminus and first point of deviation is 500 feet or less in length, section 7.3 does not apply to the trail. However, if a prominent feature is located between the trail terminus and first point of deviation and is 500 feet or less from the trail terminus, section 7.3 applies up to the prominent feature.

Under this exception, the 15% figure is calculated by adding up the length of trail impacted by each deviation. For example, a new 1-mile trail is being designed, and the slope provision cannot be met because conditions for departure apply in different sections of the trail for a total length of 400 feet. Likewise, the width provision cannot be met for a total of 250 feet. The trail manager keeps a running tally of the length of all deviations. Once the total deviations equal 792 feet (15% of 1 mile), section 7.3 applies only to the segment between the trail terminus and the first point of deviation, if that segment is more than 500 feet long. If the segment is 500 feet or less in length, section 7.3 does not apply to that segment unless there is a prominent feature between the trail terminus and first point of deviation.

For long-distance trails, such as National Forest System trails that span multiple districts or Forests, the Continental Divide National Scenic Trail, the Appalachian Trail, and the North Country Trail, the second general exception applies to the trail segments that are planned for construction or alteration within a given planning period, rather than over the entire length of the trail. Multiple segments that are not connected but are covered by the same planning process should be treated separately. Planning periods will vary considerably, as will the length of segments, based on the situations and entities involved. For example, if a trail manager or association typically plans trail work over 2 to 5 years, the second general exception applies to the total number of miles of trail that are constructed or altered during that period.

Section 7.1.3 Documentation

Often when trail managers leave their positions, they take with them the

institutional knowledge and memory for a particular project. Therefore, documentation is being required for any construction or alteration of a trail that is designed for hiker/pedestrian use if a decision is made not to make the trail accessible.

If a determination is made that the FSTAG does not apply to an entire trail or cannot be met on portions of a trail, a brief document must be drafted and retained in the project file enumerating the rationale for that determination, which conditions for departure and exceptions apply, the date of the determination, and the name of the individuals who made the determination.

There is no standard format for this documentation; each unit may develop its own format to meet its specific needs. The documentation need not be lengthy; one page should be sufficient. The documentation will show that applicability of the FSTAG was considered at the onset of the project and that a good-faith effort was made to consider accessibility.

7.3 TECHNICAL PROVISIONS

Section 7.3.1 addresses both trail grade and cross slope. An exception permits deviation from the trail grade and cross slope provisions where one or more conditions for departure (section 7.1.1) exist.

Section 7.3.1.1 requires that trails comply with one or more of four separate provisions for trail grade: up to 1:20 (5%), up to 1:12 (8.33%), up to 1:10 (10%), and up to 1:8 (12%). Resting intervals of specified length are required when trail grades exceed 1:20 (5%). No more than 30% of the total trail length may exceed a trail grade of 1:12 (8.33%).

In addition, section 7.3.1.1 addresses the trail grade of drain dips. .To ensure proper drainage, a trail grade of up to 1:7 (14%) is permitted into and out of a drain dip where the cross slope does not exceed 1:20 (5%).

Because the terrain in outdoor environments is often steep, applying current slope and ramp requirements in the ABAAS is not reasonable. The Reg Neg Committee's draft guidelines and the FSTAG differ from the ABAAS in that handrails are not required on trails. Handrails are impractical in the outdoor environment. In addition, steeper grades on trails are usually contiguous with the surrounding terrain, rather than elevated above it, as is a ramp to a building. Instead, in the Reg Neg Committee's draft guidelines and the FSTAG, the length of steep trail segments has been limited, and resting intervals are required. The trail grades and maximum distances in the Reg Neg Committee's draft guidelines and the FSTAG strike a balance between accessibility and the constraints imposed by natural topography.

Section 7.3.1.2 requires that the cross slope of trail segments not exceed 1:20 (5%). Cross slope, or the side-to-side slope of a trail, can be difficult to traverse. At the same time, trails need to be designed to provide sufficient drainage to prevent accumulation of water and water damage to a trail. Non-paved surfaces generally require a steeper cross slope than paved surfaces

Section 7.3.1.2.1 addresses drain dips, permitting a cross slope of 1:10 (10%) at the bottom of the drain dip where the clear tread width is at least 42 inches.

Section 7.3.2 requires resting intervals to be 60 inches long to accommodate a person using a wheelchair and at least as wide as the widest portion of the trail segment leading to the resting intervals. The slope of resting intervals may not exceed 1:20 (5%) in any direction. An exception permits deviation from this technical provision where one or more conditions for departure (section 7.1.1) exist.

Section 7.3.3 requires the surface of accessible trails to be both firm and stable. The FSTAG does not contain the slip resistance requirement in the accessible surface provisions in 302.1 of the ABAAS because slip resistance cannot be guaranteed in the outdoor environment. Weather conditions (rain, snow, and ice) affect slip resistance. For example, natural or non-hardened surfaces may not be slip resistant. Slip resistance also may be difficult to control when leaves and other surface debris caused by natural erosion accumulate on a surface.

The means and materials used to establish accessible exterior surfaces are plentiful. Crushed stone, fines, packed soil, and other natural materials can provide a firm and stable surface. Natural materials bonded with synthetic materials can provide the required degree of stability and firmness. However, not all of these materials are suitable for every trail. An exception permits deviation from this provision where one or more conditions for departure in section 7.1.1 exist. For example, as stated in the fourth condition for departure, if prevailing construction practices do not involve importation of surfacing material and the natural surfacing material cannot be made firm and stable, compliance with the firm and stable requirement may not be possible.

The terms “firm” and “stable” have been used in accessibility guidelines since the UFAS was issued in 1984. The terms have never been clearly defined, nor has there been a readily available means of technical measurement to determine what constitutes a firm and a stable surface. In the FSTAG, a firm surface is not noticeably distorted or compressed by the passage of a device that simulates a person using a wheelchair. Surface firmness should be determined and documented during the planning process for the primary seasons for which a trail is managed, under normally occurring weather conditions. In the FSTAG, a stable surface is not permanently affected by normally occurring weather conditions and is able to sustain normal wear and tear from the uses for which it is managed, between planned maintenance cycles. The determination of firmness and stability needs to be made keeping in mind the typical conditions that occur in the vicinity of the trail being evaluated. Local trail managers know the surface of trails they manage and how it wears throughout the primary seasons for which the trails are managed.

The purpose of ensuring the surface firmness and stability is to prevent mobility devices from sinking into the surface, thereby making it difficult for a person using crutches, a cane, or a wheelchair to move through that area with reasonable effort. The standard mobility device used in the Forest Service’s accessibility guidelines is the wheelchair because its dimensions and multiple contacts points

(two wheels and two casters) often make it difficult to accommodate. Thus, if a person using a wheelchair can utilize an area, most other people also can utilize that area.

To determine the wheelchair compatibility of a surface, that is, whether it is firm and stable enough to accommodate a person using a wheelchair, one should look at the surface and consider whether (1) a person riding a narrow-tired bicycle could cross the surface easily without the wheels sinking into or disturbing the surface; and (2) whether a heavy child in a folding umbrella stroller with small plastic wheels could be pushed across the surface without the small wheels sinking into or distorting the surface. The wheel configurations on these two devices are similar to the large rear tires and small front casters of the average wheelchair. While this method for determining firmness and stability is not scientifically accurate, it has been proven to be effective.

In the late 1990s, Beneficial Designs of Minden, Nevada conducted a study under a contract for the Access Board. The purpose of the study was to determine the amount of energy required to negotiate different surface types and to develop recommendations for surface accessibility guidelines. The technical paper resulting from that work is available on the Access Board's website at www.access-board.gov/research&training/research.htm. For further information, consult Beneficial Designs' website at http://www.beneficialdesigns.com/.

Section 7.3.4 requires the clear tread width to be at least 36 inches. The clear tread is the width of the usable trail tread, measured perpendicular to the direction of travel and on or parallel to the surface of the usable trail tread.

This provision is consistent with the clear tread width requirements for an accessible route in 403.5.1 of the ABAAS.

Exception 1 permits the clear tread width to be reduced to no less than 32 inches where one or more of the conditions for departure in section 7.1.1 exist.

Exception 2 permits deviation from section 7.3.4 where a 32-inch minimum clear tread width cannot be provided because one or more conditions for departure in section 7.1.1 exist.

Section 7.3.5 requires passing space where the clear tread width of the trail is less than 60 inches. Passing space is required at intervals of no more than 1000 feet. Either a T-shaped space or a turning circle is permitted. An exception permits deviation from this provision where passing space cannot be provided because one or more conditions for departure in section 7.1.1 exist.

Section 7.3.6 requires that tread obstacles not exceed 2 inches in height.

Exception 1 permits a 3-inch obstacle where the trail grade and cross slope are 1:20 (5%) or less.

Exception 2 permits deviation from this provision if one or more conditions for

departure in section 7.1.1 exist. Natural features such as rocks, roots, and ruts might require a greater obstacle height than what is permitted in the indoor environment. Some wheelchairs used in the outdoor environment are designed to handle obstacles at these heights.

Section 7.3.7 addresses protruding objects. Protruding objects extend into the clear tread width of a trail from beside or above it. Leaning tree trunks, rock ledges, and branches are common protruding objects. Trails must comply with 307 of the ABAAS and provide at least 80 inches of headroom. Where the vertical clearance of a trail is reduced to less than 80 inches because one or more conditions for departure in section 7.1.1 exist, a barrier to warn blind and visually impaired persons must be provided. An exception to these requirements is allowed where a condition for departure prevents providing 80 inches of clearance and installation of a warning barrier. This exception allows a trail to pass under ledges or through caves without changing the character of the area.

Section 7.3.8 requires openings in trail surfaces to be of a size that does not permit passage of a 1/2-inch-diameter sphere. Elongated openings must be placed so that the long dimension is perpendicular or diagonal to the dominant direction of travel.

Exception 1 allows elongated openings to be parallel to the dominant direction of travel where the opening does not permit passage of a 1/4-inch-diameter sphere. This exception is necessary to allow trail managers to place boards lengthwise along a boardwalk trail to reduce environmental impact, as is often done in a wetland area.

Exception 2 allows openings that do not permit passage of a 3/4-inch-diameter sphere where one or more conditions for departure in section 7.1.1 exist. Three-quarter-inch spacing is permitted under this exception since wooden plank decking or boardwalks are installed on many trails for crossing wet, sandy, rocky, or environmentally sensitive areas. The planks expand and contract because of weather conditions. The boardwalks may need more than 1/2-inch spacing between the planks to permit expansion and to allow water to drain.

Exception 3 permits deviation from this provision in its entirety where it is not feasible to provide openings that do not permit passage of a 3/4-inch-diameter sphere because one or more conditions for departure in section 7.1.1 exist.

Section 7.3.9 requires the height of edge protection, where provided, to be at least 3 inches. Natural trail surfaces are likely to vary. The 2-inch edge protection required by the ABAAS may not be obvious or detectable in the outdoor environment and may become a tripping hazard. In the outdoor environment, many people with limited vision who use canes will search higher than in an indoor environment to distinguish between the edge and the surface of the trail. Further, many people will use the natural tactile change between the trail surface and the surrounding ground surface to distinguish between the edge and the surface of the trail.

This provision specifies only the minimum height, not the design, of optional edge protection. If a decision is made to provide edge protection, it should be designed appropriately for the site. The use of holes, slots, or other openings in the edge protection for drainage or other reasons is entirely at the discretion of the designer.

In contrast to the edge protection requirement for ramps in the ABAAS, edge protection is not required under the FSTAG for accessible trails. However, where edge protection is provided for other reasons, such as to improve safety, it must comply with section 7.3.9.

Section 7.3.10 requires that signs be posted at the trailhead of new or altered trails and trail segments that fall into Trail Class 4 or 5 under the ITDS and the Forest Service's trail class matrix, as well as at the trailhead of trails that have been evaluated for accessibility. At a minimum, in addition to the standard information including the name and length of the trail, these signs must include the typical and maximum trail grade, typical and maximum cross slope, typical and minimum tread width, surface type and firmness, and obstacles.

Even if the FSTAG's technical provisions were met when a trail was constructed, events may occur, such as tree blow-downs and flooding, that may make the trail temporarily inaccessible until maintenance crews can clear the obstruction. To address these situations, signs posted at trailheads should state that the information they contain reflects the condition of the trail when it was constructed or assessed and should include the date of the construction or assessment.

Where more extensive trail information is provided (*e.g.*, an aerial map of the trail and related facilities), the location of specific trail features and obstacles that do not comply with the FSTAG's technical provisions should be identified and a profile of the trail grade should be included.

Local managers have the discretion to decide whether to post signs on new or altered trails and trail segments that fall into Trail Class 1, 2, or 3 under the ITDS or the Forest Service's trail class matrix. If a local manager decides to post signs on these trails, the signs must comply with section 7.3.10.

If materials need to be obtained from or manipulated on a sign or kiosk, the sign or kiosk must be designed to meet the reach ranges enumerated in 308 of the ABAAS.

Forest Service Trail Accessibility Guidelines

Scoping Requirements, Technical Provisions, and Appendices

7.0 General 24

7.1 Applicability 24

7.1.1 Conditions for Departure 24

7.1.2 General Exceptions 24

7.1.3 Documentation 26

7.2 Definitions 26

7.3 Technical Specifications 29

7.3.1 Trail Grade and Cross Slope 29

7.3.2 Resting Intervals 29

7.3.3 Surface 30

7.3.4 Clear Tread Width 30

7.3.5 Passing Spaces 30

7.3.6 Tread Obstacles 30

7.3.7 Protruding Objects 30

7.3.8 Openings 31

7.3.9 Edge Protection 31

7.3.10 Signs 31

Appendices

A. Overview of the FSTAG Implementation Process 32

B. Trail Classes 37

C. Trail Planning and Management Fundamentals 40

D. Forest Service Recreation Site Development Scale Definitions 47

E. FSORAG Technical Provisions Cited in the FSTAG 49

F. ABAAS Provisions Cited in the FSTAG 55

Technical Provisions

7.0 GENERAL

The provisions of section 7 apply to trails in the National Forest System that (1) are new or altered; (2) have a designed use of hiker/pedestrian under the Forest Service Trail Planning and Management Fundamentals and Interagency Trail Data Standards (ITDS); and (3) connect directly to a currently accessible trail or to a trailhead. Where provided, associated constructed features (such as tent pads and fire rings) located along National Forest System trails shall comply with the Forest Service Outdoor Recreation Accessibility Guidelines (FSORAG), as provided in Forest Service Manual (FSM) 2330.03, paragraph 4(f).

Side trails or other routes to associated constructed features shall be at the same level of development as the parent trail. These side trails and other routes are not outdoor recreation access routes. Therefore, they are subject only to section 7 of the FSTAG and do not have to comply with the technical provisions in section 2.0 of the FSORAG that apply to outdoor recreation access routes.

7.1 APPLICABILITY

7.1.1 Conditions for Departure. Deviations from the technical provisions in section 7 are permitted only where one or more of the following conditions for departure exist and an exception applies. If no exception applies, no deviation is allowed. Deviations must be determined provision by provision. Once the circumstances that justify the deviation are no longer present, the technical provision must be met.

Condition for Departure 1. Where compliance would cause substantial harm to cultural, historic, religious, or significant natural features or characteristics**.**

Condition for Departure 2. Where compliance would substantially change the physical or recreation setting or the trail class, designed use, or managed use of a trail or trail segment or would not be consistent with the applicable land management plan.

Condition for Departure 3. Where compliance would require construction methods or materials that are prohibited by federal, state, or local law.

Condition for Departure 4. Where compliance would be impractical due to terrain or prevailing construction practices.

7.1.2 General Exceptions. Deviations from all the technical provisions in section 7.3 are permitted where one or more conditions for departure exist and general exception 1 or 2 applies.

7.1.2.1 General Exception 1. Deviations from all the technical provisions in section 7.3 are permitted where one or more conditions for departure in section

7.1.1 <u>and</u> at least one of the following limiting factors exist:

Limiting Factor 1. The combination of trail grade and cross slope exceeds 20% for over 40 feet (6100 mm).

Limiting Factor 2. The surface is not firm and stable for a distance of 45 feet or more (13700 mm).

Limiting Factor 3. The minimum trail width is 18 inches (462 mm) or less for a distance of at least 20 feet (6100 mm)**.**

Limiting Factor 4. A trail obstacle of at least 30 inches (770 mm) in height extends across the full width of the trail.

The following determines the extent section 7.3 applies where one or more conditions for departure and at least one limiting factor exist:

(A) If the trail segment between the trail terminus and the limiting factor is more than 500 feet (150 m) in length, section 7.3 does not apply after the first limiting factor.

(B) If the trail segment between the trail terminus and the limiting factor is 500 feet (150 m) or less in length, section 7.3 does not apply to the trail, subject to the exception in paragraph (C).

(C) If a prominent feature is located between the trail terminus and the limiting factor, the segment between the trail terminus and the prominent feature must comply with section 7.3, even if the segment is 500 feet (150 m) or less in length.

<u>7.1.2.2 General Exception 2</u>. The following determines the extent section 7.3 applies where one or more conditions for departure exist that result in deviations from the technical provisions of section 7.3 for over 15% of the length of trail:

(A) If the trail segment between the trail terminus and the first point of deviation is more than 500 feet (150 m) in length, section 7.3 does not apply after the first point of deviation.

(B) If the trail segment between the trail terminus and the first point of deviation is 500 feet (150 m) or less in length, section 7.3 does not apply to the trail, subject to the exception in paragraph (C).

(C) If a prominent feature is located between the trail terminus and the first point of deviation, the segment between the trail terminus and the prominent feature must comply with section 7.3, even if the segment is 500 feet (150 m) or less in length.

For long-distance trails, General Exception 2 applies to the trail segments that are planned for construction or alteration in a given planning period, rather than over the entire length of the trail.

7.1.3 Documentation. If a determination is made that the FSTAG's technical provisions do not apply to an entire trail or cannot be met on portions of a trail, a brief document shall be drafted and retained in the project file enumerating the rationale for that determination, which conditions of departure and exceptions apply, the date of the determination, and the name of the individuals who made the determination. There is no standard format for this documentation; each unit may develop its own format to meet its specific needs.

7.2 DEFINITIONS

All trail-related definitions used in the FSTAG are from the Forest Service's Infrastructure Trails Module and the Trail Assessment and Condition Survey (TRACS) materials.

Accessible Trail. A trail that meets all the technical provisions in section 7.3 of the FSTAG. The technical provisions in section 7.3 of the FSTAG may be met to varying degrees, due to the presence of one or more conditions for departure. However, a trail or trail segment is not accessible if a condition for departure and an exception render a technical provision inapplicable.

Alteration. A change in the original purpose, intent or design of a trail.

Constructed Features

- **Associated Constructed Feature.** A constructed element associated with a trail that provides support for trail users, but is not a part of the trail tread. Examples include overnight shelters, toilets, fire rings, picnic tables, and tent pads. Refer to the FSORAG for the technical provisions for associated constructed features.

- **Trail Constructed Feature.** A constructed feature that functions as part of the trail tread. Examples include puncheon, trail bridges, boardwalks, waterbars, and switchbacks. For a listing of trail constructed features, refer to the trail documentation on the Forest Service website http://www.fs.fed.us/r3/measures/TR.htm.

Cross Slope. The percentage of rise to length when measuring the trail tread from edge to edge perpendicular to the direction of travel.

- **Typical Cross Slope.** The normally encountered cross slope found along the length of a trail. Measurement intervals become more frequent as the trail class increases.

Designed Use. The managed use of a trail that requires the most demanding design, construction, and maintenance parameters.

General Forest Areas (GFAs). For purposes of the FS guidelines, all National Forest System lands available for recreational use, other than wilderness areas, where the FS Recreation Site Development Scale is 2 or less. FS Development

Scale 0 recreation sites do not contain any constructed features, while constructed features in FS Development Scale 1 and 2 recreation sites are primarily for resource protection rather than visitor comfort and convenience.

Hiker/Pedestrian Trail. A trail that is designed, constructed, and maintained for hiker/pedestrian use or that is actively managed for hiker/pedestrian use.

Maintenance. Routine or periodic repair of trails or trail segments to restore them to the standards to which they were originally designed and built**.** Maintenance does not change the original purpose, intent, or design of a trail.

Managed Uses. The modes of travel for which a trail is actively managed.

Outdoor Recreation Access Route (ORAR). A continuous, unobstructed path for pedestrian use that connects elements in a picnic area, in a campround, or at a trailhead.

Point of Deviation. The location on a trail where one or more technical provisions in the FSTAG cannot be met due to the presence of a condition for departure enumerated in section 7.1.1.

Prominent Feature. A natural, cultural, or historic feature located along or adjacent to a trail that is determined by a trail designer or manager to have national, regional, or local distinction or significance. A prominent feature may be the focal point, main attraction, or destination of a trail, or it may simply be an interesting secondary feature. Examples include but are not limited to boulder outcrops, waterfalls, groupings of old or unique trees or other vegetation, vistas that may or may not be part of a developed overlook, and cultural or historic structures.

Protruding Object. An object, such as a tree, branch, or rock ledge, that extends into a trail from beside or above it.

Recreation Site. A discrete area on a Forest that provides recreation opportunities, receives use, and requires a management investment to operate and/or maintain to standard.

Scoping Requirement. Specification of where, when, and how much of a constructed feature must be accessible to comply with the FSTAG.

Surface

- **Firm.** Not noticeably distorted or compressed by the passage of a device that simulates a trail user in a wheelchair. Surface firmness should be determined and documented during the planning process for the seasons for which a trail is managed, under normally occurring weather conditions.

- **Stable.** Not permanently affected by normally occurring weather conditions and able to sustain normal wear and tear caused by the uses for which a trail is managed, between planned maintenance cycles.

Technical Provision. Specification of the dimensions and characteristics of constructed features that are required to ensure accessibility.

Trail. For purposes of the FSTAG and FSORAG, a trail is a route that is designed, constructed, or designated for recreational pedestrian use or provided as an pedestrian alternative to vehicular routes within a transportation system. A trail is not an outdoor recreation access route (ORAR).

Trail Class. The prescribed scale of trail development, indicating the intended design and management standards for a trail.

Trail Grade. The consistent vertical distance of ascent or descent of a trail expressed as a percentage of its length, commonly measured as a ratio of rise to length.

Trailhead. For purposes of the FSTAG, a site designed and developed by the Forest Service, a trail association, a trail maintaining club, a trail partner, or other cooperators to provide staging for trail use.

For purposes of the FSTAG the following do not constitute a trailhead:

- Junctions between trails where there is no other access.

- Intersections where a trail crosses a road or users have developed an access point, but no improvements have been provided by the Forest Service, a trail association, a trail maintaining club, a trail partner, or other cooperators beyond minimal signage for public safety.

Trail Segment. The portion of a trail being planned, evaluated, or constructed.

Trail Terminus. The beginning or ending point of a trail or trail segment, where a trail assessment or trail work begins or ends.

Tread Width. The visible trail surface measured perpendicular to the direction of travel.

- **Clear Tread Width.** The width of the usable trail tread and adjacent usable surface.

- **Minimum Tread Width.** The width of the usable part of the tread width at the narrowest point on a trail.

- **Minimum Trail Width.** The width of the trail tread and the adjacent usable surface at the narrowest point on a trail.

Wheelchair. A device, including one that is a battery-powered, that is designed solely for use by a mobility-impaired person for locomotion and that is suitable for use in an indoor pedestrian area. A person whose disability requires use of a wheelchair or mobility device may use a wheelchair or mobility device that meets this definition anywhere foot travel is permitted.

7.3 TECHNICAL PROVISIONS

7.3.1 Trail Grade and Cross Slope. Trail grades and cross slopes shall comply with sections 7.3.1.1 and 7.3.1.2.

> **Exception.** Section 7.3.1 does not apply where one or more conditions for departure in section 7.1.1 exist.

7.3.1.1 Trail Grade. The grade of trail segments shall comply with this section and shall be consistent over the distances cited. No more than 30% of the total trail length may exceed a trail grade of 1:12 (8.33%).

7.3.1.1.1. Trail grade of up to 1:20 (5%) is permitted for any distance.

7.3.1.1.2. Trail grade of up to 1:12 (8.33%) is permitted for up to 200 feet (61 m). Resting intervals complying with section 7.3.2 shall be provided at distances no greater than 200 feet (61 m) apart.

7.3.1.1.3. Trail grade of up to 1:10 (10%) is permitted for up to 30 feet (9150 mm). Resting intervals complying with section 7.3.2 shall be provided at distances no greater than 30 feet (9150 mm) apart.

7.3.1.1.4. Trail grade of up to 1:8 (12.5%) is permitted for up to 10 feet (3050 mm). Resting intervals complying with section 7.3.2 shall be provided at distances no greater than 10 feet (3050 mm) apart.

7.3.1.1.5. At drain dips, a trail grade of 1:7 (14%) is permitted for up to 5 feet (1525 mm) where the cross slope does not exceed 1:20 (5%).

7.3.1.2 Cross Slope. The cross slope shall not exceed 1:20 (5%).

7.3.1.2.1. At drain dips, a cross slope of up to 1:10 (10%) is permitted at the bottom of the dip where the clear tread width is at least 42 inches (1065 mm).

7.3.2 Resting Intervals. Where the trail grade exceeds 5%, resting intervals shall be provided as specified in sections 7.3.1.1.2, 7.3.1.1.3, and 7.3.1.1.4. Resting intervals shall be at least 60 inches (1525 mm) long, shall be at least as wide as the widest portion of the trail segment leading to the resting intervals, and shall have a slope not exceeding 1:20 (5%) in any direction.

> **Exception.** This provision does not apply where resting intervals cannot be provided because one or more conditions for departure in section 7.1.1 exist.

7.3.3 Surface. The trail tread surface shall be both firm and stable.

Exception. This provision does not apply where a firm and stable surface cannot be provided because one or more conditions for departure in section 7.1.1 exist.

7.3.4 Clear Tread Width. The clear tread width of the trail shall be at least 36 inches (915 mm).

Exception 1. The clear tread width may be reduced to no less than 32 inches (815 mm) where one or more conditions for departure in section 7.1.1 exist.

Exception 2. This provision does not apply where at least 32 inches (815 mm) clear tread width cannot be provided because one or more conditions for departure in section 7.1.1 exist.

7.3.5 Passing Spaces. Where the clear tread width of the trail is less than 60 inches (1525 mm), passing spaces shall be provided at intervals of no more than 1000 feet (300 m). Passing spaces shall be at least 60 by 60 inches (1525 mm), or an intersection of two walking surfaces that provide a T-shaped space complying with 304.3.2 of the Architectural Barriers Act Accessibility Standards (ABAAS), provided that the arms and stem of the T-shaped space extend at least 48 inches (1220 mm) beyond the intersection. The cross slope of passing spaces shall not exceed 5% in any direction.

Exception 1. This provision does not apply where passing spaces cannot be provided because one or more conditions for departure in section 7.1.1 exist.

7.3.6 Tread Obstacles. Where tread obstacles exist, they shall not exceed a height of 2 inches (50 mm).

Exception 1. Tread obstacles with a maximum height of 3 inches (75 mm) are permitted where trail grade and cross slope are 1:20 (5%) or less.

Exception 2. Where exception 1 cannot be met because one or more conditions for departure in section 7.1.1 exist, section 7.3.6 does not apply.

7.3.7 Protruding Objects. Protruding objects on trails shall comply with 307 of the ABAAS and shall have at least 80 inches (2030 mm) of headroom.

Exception 1. Where vertical clearance of a trail is reduced to less than 80 inches (2030 mm) because one or more conditions for departure in section 7.1.1 exist, a barrier shall be provided to warn individuals who are blind or visually impaired.

Exception 2. Where exception 1 cannot be met because one or more conditions for departure in section 7.1.1 preclude 80 inches of headroom or installation of a warning barrier, section 7.3.7 does not apply.

7.3.8 Openings. Openings in trail tread surfaces shall be small enough to prevent passage of a 1/2-inch (13 mm)-diameter sphere. Elongated openings shall be placed so that the long dimension is perpendicular or diagonal to the dominant direction of travel.

> **Exception 1.** Elongated openings are permitted to be parallel to the dominant direction of travel where the opening does not allow passage of a 1/4-inch (6.5 mm)-diameter sphere.
>
> **Exception 2.** Openings that are perpendicular or diagonal to the dominant direction of travel are permitted to be of a size that does not allow passage of a 3/4-inch (19 mm)-diameter sphere where one or more conditions for departure in section 7.1.1 exist.
>
> **Exception 3.** Where exception 1 or exception 2 cannot be met because one or more conditions for departure in section 7.1.1 exist, section 7.3.8 does not apply.

7.3.9 Edge Protection. Where edge protection is provided along a trail, the edge protection shall have a height of at least 3 inches (75 mm).

7.3.10 Signs. If materials need to be obtained from or manipulated on a sign or kiosk, the sign or kiosk shall be designed to meet the reach ranges in 308 of the ABAAS.

Signs shall be posted at the trailhead of new or altered trails and trail segments that fall into Trail Class 4 or 5, as well as at the trailhead of trails that have been evaluated for accessibility. At a minimum, in addition to the standard information including the name and length of the trail, these signs shall include the typical and maximum trail grade, typical and maximum cross slope, typical and minimum tread width, surface type and firmness, and obstacles. These signs also should state that the posted information reflects the condition of the trail when it was constructed or assessed and should include the date of the construction or assessment.

Where more extensive trail information is provided (*e.g.,* an aerial map of the trail and related facilities), the location of specific trail features and obstacles that do not comply with the FSTAG's technical provisions should be identified and a profile of the trail grade should be included. Local managers have the discretion to decide whether to post signs on newly constructed or altered trails that fall into Trail Class 1, 2, or 3.

APPENDIX A

Overview of the FSTAG Implementation Process

This provides a graphic summary of the FSTAG implementation process. The overview outlines FSTAG steps and process sequencing. The detailed information, definitions and technical provisions that are critical to understanding and implementing the complete FSTAG process are provided in the FSTAG preamble and technical provisions.

The FSTAG must be applied prior to initiating any project involving the new construction or alteration of any National Forest System trail with the designated of hiker/pedestrian.

Overview of Process

Assessment Pre-Work

Before applying the FSTAG, assessment pre-work includes but is not limited to:

1. Analysis of existing conditions, including potential opportunities and constraints (*e.g.,* NEPA analysis).
2. Identification/verification of the desired trail class for the trail or trail segment.
3. Identification/verification of the Designed Use of the trail or trail segment. [1]

↓

Key Steps and Sequence

Step 1: Determine Applicability of the FSTAG	Designed Use[1] = Hiker/Pedestrian?	No →	FSTAG does not apply.
	↓ Yes		
	New Construction or Alteration?	No →	FSTAG does not apply.
	↓ Yes		
	Trail Connects to a Trailhead or Accessible Trail?	No →	FSTAG does not apply.
	↓ Yes		
	Proceed to Step 2: Identify Presence of Limiting Factors.		

Step 2: Identify Presence of Limiting Factors General Exception 1 (7.1.2.1) Note: Sequence for identifying limiting factors may vary and does not need to occur in the order illustrated here.	**Trail Grade** Trail grade exceeds 20% for 40' or more?	No →						FSTAG may still apply. Proceed to limiting factor for surface.
		Yes → Document length of trail that exceeds 20% and data source.	Does condition for departure exist?	No →				
				Yes →	Is limiting factor more than 500' from trail terminus?	Yes →		FSTAG applies between terminus and this limiting factor or prominent feature.
						No →	Prominent feature present?	Yes →
								No → FSTAG does not apply. Document applicable condition for departure.
	Surface Surface not firm and stable for 45' or more?	N o (The surface IS firm and stable) →						FSTAG may still apply. Proceed to limiting factor for minimum trail width.
		Yes (the surface is NOT firm and stable). → Document surface firmness and data source.	Does condition for departure exist?	No →				
				Yes →	Is limiting factor more than 500' from trail terminus?	Yes →		FSTAG applies between terminus and this limiting factor or prominent feature.
						No →	Prominent feature present?	Yes→
								No→ FSTAG does not apply. Document applicable condition for departure.
	Minimum Trail Width Minimum trail width less than 18" for 20' or more?	No→						FSTAG may still apply. Proceed to limiting factor for trail obstacle.
		Yes → Document minimum trail width and data source.	Does condition for departure exist?	No→				
				Yes →	Is limiting factor more than 500' from trail terminus?	Yes →		FSTAG applies between terminus and this limiting factor or prominent feature.
						No →	Prominent feature present?	Yes→
								No→ FSTAG does not apply. Document applicable condition for departure.
	Trail Obstacle Trail obstacle 30" or higher across width of trail?	No →						FSTAG may still apply. Proceed to Step 3: Apply Technical Provisions..
		Yes → Document obstacle type, dimensions and data source.	Does condition for departure exist?	No →				
				Yes →	Is limiting factor more than 500' from trail terminus?	Yes →		FSTAG applies between terminus and this limiting factor or prominent feature.
						No →	Prominent feature present?	Yes →
								No → FSTAG does not apply. Document applicable condition for departure.

Step 3: Apply Technical Provisions Technical Provisions (7.3.1 to 7.3.8)	**Trail Grade** Trail grade complies with 7.3.1.1?	Yes →				Comply with trail grade technical provision 7.3.1.1.	
		No →	Does condition for departure exist?	Yes →	Deviation permitted. Measure and record length of deviation.	→	Proceed to Step 4: calculate cumulative deviation percentage.
				No →	Deviation not permitted. →	Comply with trail grade technical provision 7.3.1.1.	
	Trail Cross Slope Trail cross slope complies with 7.3.1.2?	Yes →				Comply with trail cross slope technical provision 7.3.1.2.	
		No →	Does condition for departure exist?	Yes →	Deviation permitted.[2] Measure and record length of deviation.	→	Proceed to Step 4: calculate cumulative deviation percentage.
				No →	Deviation not permitted. →	Comply with trail cross slope technical provision 7.3.1.2.	
	Resting Interval Resting intervals comply with 7.3.2?	Yes →				Comply with resting interval technical provision 7.3.2.	
		No →	Does condition for departure exist?	Yes →	Deviation permitted.[2] Measure and record length of deviation.	→	Proceed to Step 4: calculate cumulative deviation percentage.
				No →	Deviation not permitted. →	Comply with resting interval technical provision 7.3.2.	
	Surface Surface complies with 7.3.3?	Yes →				Comply with surface technical provision 7.3.3.	
		No →	Does condition for departure exist?	Yes →	Deviation permitted.[2] Measure and record length of deviation.	→	Proceed to Step 4: calculate cumulative deviation percentage.
				No →	Deviation not permitted. →	Comply with surface technical provision 7.3.3.	
	Clear Tread Width Clear tread	Yes →				Comply with clear tread width technical provision 7.3.4.	
		No →	Does condition for departure	Yes →	Deviation permitted[2] Measure and record length of deviation.	→	Proceed to Step 4: calculate cumulative deviation percentage.

	width complies with 7.3.4?		exist?	No →	Deviation not permitted.	→	Comply with clear tread width technical provision 7.3.4.	
Passing Space Passing spaces comply with 7.3.5?	Yes →					Comply with passing space technical provision 7.3.5.		
	No →	Does condition for departure exist?	Yes →	Deviation permitted.[2] Measure and record length of deviation.		→	Proceed to Step 4: calculate cumulative deviation percentage.	
			No →	Deviation not permitted.	→	Comply with passing space technical provision 7.3.5.		
Tread Obstacles Tread obstacles comply with 7.3.6?	Yes →					Comply with tread obstacle technical provision 7.3.6.		
	No →	Does condition for departure exist?	Yes →	Deviation permitted.[2] Measure and record length of deviation.		→	Proceed to Step 4: calculate cumulative deviation percentage.	
			No →	Deviation not permitted.	→	Comply with tread obstacle technical provision 7.3.6.		
Protruding Objects Protruding objects comply with 7.3.7?	Yes →					Comply with protruding objects technical provision 7.3.7.		
	No →	Does condition for departure exist?	Yes →	Deviation permitted.[2] Measure and record length of deviation.		→	Proceed to Step 4: calculate cumulative deviation percentage.	
			No →	Deviation not permitted.	→	Comply with protruding objects technical provision 7.3.7.		
Openings Openings comply with 7.3.8?	Yes →					Comply with trail grade technical provision 7.3.8.		
	No →	Does condition for departure exist?	Yes →	Deviation permitted.[2] Measure and record length of deviation.		→	Proceed to Step 4: calculate cumulative deviation percentage.	
			No →	Deviation not permitted.	→	Comply with openings technical provision 7.3.8.		

<table>
<tr><td rowspan="6">Step 4: Calculate Cumulative Deviation Percentage

General Exception 2 (7.1.2.2)</td><td colspan="6"></td></tr>
<tr><td rowspan="5">Cumulative Deviation Percentage

Do permitted deviations occur on less than 15 percent of total trail length?</td><td colspan="4">Yes ➞</td><td>Apply FSTAG technical provisions to entire trail.[3]</td></tr>
<tr><td rowspan="4">No, deviations occur on more than 15%. ➞</td><td rowspan="4">Is first deviation located more than 500’ from trail terminus?</td><td colspan="3">Yes ➞</td><td>Apply FSTAG technical provisions to segment of trail between terminus and first point of deviation.[3]</td></tr>
<tr><td rowspan="2">No ➞</td><td rowspan="2">Does prominent feature exist?</td><td>Yes ➞</td><td>Apply FSTAG technical provisions to segment of trail between terminus and prominent feature.[3]</td></tr>
<tr><td>No ➞</td><td>FSTAG does not apply.
Document cumulative deviation percentage.</td></tr>
<tr><td colspan="6"></td></tr>
</table>

[1] Excerpt from *Forest Service Trail Fundamentals* (www.fs.fed.us/r3/measures/Inventory/Trails.htm)

Definition of Designed Use: “The intended use that controls the desired geometric design of the trail, and determines the subsequent maintenance parameters for the trail…. Of the actively Managed Uses that the trail is developed and managed for, the Designed Use is the single design driver that determines the technical specifications for the trail.”

Excerpt from Access Board *Recommendations for Accessibility Guidelines: Outdoor Developed Areas, Final Report* (page 11):

“The accessibility guidelines for trails apply to those which are designed and constructed for pedestrian use. These guidelines are not applicable to trails primarily designed and constructed for recreational use by equestrians, mountain bicyclists, snowmobile users, or off-highway vehicle users, even if pedestrians may occasionally use the same trails. People use these categories of trails by means of transportation other than foot travel or personal mobility device. Design and constructed requirements for equestrians, mountain bikes, OHVs, and snowmobiles are based on the specific requirements for the intended mode of transportation. For the safety of trail users, pedestrian use may not always be permitted on these trails in order to minimize conflicts between motorized and non-motorized recreation. These trails do not preclude use by a person with a disability since it is planned that all trail users would be using the one or more alternative means of transportation for which the trail is designed and constructed. The design and construction of pedestrian trails without consideration of these proposed guidelines, by contrast, could present barriers to some trail users because the intended use is by foot or personal mobility device. For these reasons, the committee intentionally limited the application of the proposed guidelines to pedestrian use trails.

It should be noted that the definition used in these proposed guidelines is not the only definition used by trail designers and manager. Rather, it was developed to specifically define the scope of these guidelines.

[2] If at any point during Step 3 the occurrence of one or more conditions of departure results in permitted deviations from technical provisions on more than 15% of the trail length, proceed to Step 4.

[3] Refer to the FSTAG for detailed instructions, definitions, and technical provisions 7.0 through 7.3.10.

APPENDIX B

National Trail Data Standards

TRAIL CLASS

National Trail Management Classes

Updated 1/14/2004

Trail prescriptions describe the desired management of each trail, based on Forest Plan direction. These prescriptions take into account user preferences, setting, protection of sensitive resources, and other management activities. To meet prescription, each trail is assigned an appropriate Trail Class. These general categories are used to identify applicable Trail Design Parameters and to identify basic indicators used for determining the cost to meet national quality standards.[1]

Note: Trail Class descriptions define "typical" attributes, and exceptions may occur for any attribute. Apply the Trail Class that most closely matches the managed objective of the trail.

Trail Attributes	Trail Class 1 Minimal/Undeveloped Trail	Trail Class 2 Simple/Minor Development Trail	Trail Class 3 Developed/Improved Trail	Trail Class 4 Highly Developed Trail	Trail Class 5 Fully Developed Trail
General Criteria Physical Characteristics to be Applied to All National Forest System Trails					
Tread & Traffic Flow	• Tread intermittent and often indistinct • May require route finding • Native materials only	• Tread discernible and continuous, but narrow and rough • Few or no allowances constructed for passing • Native materials	• Tread obvious and continuous • Width accommodates unhindered one-lane travel (occasional allowances constructed for passing) • Typically native materials	• Tread wide and reltively smooth with few irregularities • Width may consistently accommodate two-lane travel • Native or imported materials • May be hardened	• Width generally accommodates two-lane and two-directional travel, or provides frequent passing turnouts • Commonly hardened with asphalt or other imported material

Trail Attributes	Trail Class 1 Minimal/Undeveloped Trail	Trail Class 2 Simple/Minor Development Trail	Trail Class 3 Developed/Improved Trail	Trail Class 4 Highly Developed Trail	Trail Class 5 Fully Developed Trail
General Criteria Physical Characteristics to be Applied to All National Forest System Trails					
Obstacles	• Obstacles common • Narrow passages; brush, steep grades, rocks and logs present	• Obstacles occasionally present • Blockages cleared to define route and protect resources • Vegetation may encroach into trailway	• Obstacles infrequent • Vegetation cleared outside of trailway	• Few or no obstacles exist • Grades typically <12% • Vegetation cleared outside of trailway	• No obstacles • Grades typically <8%
Constructed Features & Trail Elements	• Minimal to non-existent • Drainage is functional • No constructed bridges or foot crossings	• Structures are of limited size, scale, and number • Drainage functional • Structures adequate to protect trail infrastructure and resources • Primitive foot crossings and fords	• Trail structures (walls, steps, drainage, raised trail) may be common and substantial • Trail bridges as needed for resource protection and appropriate access • Generally native materials used in Wilderness	• Structures frequent and substantial • Substantial trail bridges are appropriate at water crossings • Trailside amenities may be present	• Structures frequent or continuous; may include curbs, handrails, trailside amenities, and boardwalks • Drainage structures frequent; may include culverts and road-like designs
Signs	• Minimum required • Generally limited to regulation and resource protection • No destination signs present	• Minimum required for basic direction • Generally limited to regulation and resource protection • Typically very few or no destination signs present	• Regulation, resource protection, user reassurance • Directional signs at junctions, or when confusion is likely • Destination signs typically present • Informational and interpretive signs may be present outside of Wilderness	• Wide variety of signs likely present • Informational signs likely (outside of Wilderness) • Interpretive signs possible (outside of Wilderness) • Trail Universal Access information likely displayed at trailhead	• Wide variety of signage is present • Information and interpretive signs likely • Trail Universal Access information is typically displayed at trailhead •
Typical Recreation Environs & Experience[2]	• Natural, unmodified • ROS: Often Primitive setting, but may occur in other ROS settings • WROS: Primitive	• Natural, essentially unmodified • ROS: Typically Semi-Primitive setting • WROS: Primitive to Semi–Primitive	• Natural, primarily unmodified • ROS: Typically Semi-Primitive to Roaded Natural setting • WROS: Semi-Primitive to Transition	• May be modified • ROS: Typically Roaded Natural to Rural setting • WROS: Transition (rarely present in Wilderness)	• Can be highly modified • ROS: Typically Rural to Urban setting • Commonly associated with Visitor Centers or high-use recreation sites • Not present in Wilderness

[1] For user-specific design criteria and specifications, refer to Forest Service Handbook and other applicable agency references.

[2] Typical Recreation Environment & Experience descriptors are provided to assist with understanding Trail Classes. They represent typical or commonly occurring Trail Class and ROS or WROS setting combinations, but are not intended to indicate combinations that are “allowed” or “not allowed”. The appropriate Trail Class should be determined by local managers at the trail-specific level, based on Forest Plan direction and other considerations. While less developed trails may occur in any ROS setting, they typically occur in less developed ROS settings. Similarly, more highly developed trails tend to occur in more highly developed ROS settings, but may occur in less developed ROS settings (with the exception of Trail Class 5 which in not consistent with Primitive settings).

APPENDIX C

National Trail Data Standards

Trail Designed Use and Managed Use

Designed Use and Managed Use are basic concepts that are fundamental to effective trail planning, design, construction, maintenance, and management. When applied proactively, and in combination with Trail Class, these technical trail management concepts can form the basis for sound trail planning and management.

Designed Use: The intended use that controls the geometric design of the trail, and determines the subsequent maintenance parameters for the trail.

There is only one Designed Use ("design driver") per trail or trail segment.

Managed Use: The mode(s) of travel that are actively managed and appropriate, considering the design and management of the trail (i.e. the trail is designed and managed to accommodate this use).

There may be more than one Managed Use per trail or trail segment.

Of these Managed Uses, only one is the Designed Use, that determines the technical design, construction and maintenance specifications for the trail.

Designed Use / Managed Use Types:

- All Terrain Vehicle
- Bicycle
- Dogsled
- Hiker/Pedestrian
- Motorcycle
- (Not Specified)

- Pack and Saddle
- Portage
- Snowmobile
- Snowshoe
- Watercraft
- Motorized Watercraft
- Non-Motorized Watercraft
- Cross-Country Ski

Design Parameters: Technical specifications for trail construction and maintenance, based on the Designed Use and Trail Class. (Refer to individual agency technical specifications)

Design parameters include:
- Tread Width
- Surface
- Grade
- Cross-Slope
- Clearing
- Turns

Parameters:

Example 1: Pack and Saddle / Trail Class 2

ParkLand Forest Trail #123 is a single-track trail that's closed to all motorized use.

Although all there are no restrictions on n on-motorized uses and all non-motorized use is allowed (i.e. mountain bikes, llamas, etc.), the trail is actively managed for Pack and Saddle, and Hike / Pedestrian use. The trail is also managed as a Trail Class 2.

Of the two actively **Managed Uses**, Pack and Saddle use generally requires a greater clearing width, height, switchback turning radius, etc. Pack and Saddle use is therefore determined to be the **Designed Use** or the "design driver" that controls the desired geometric shape and subsequent maintenance parameters of the trail. Agency-specific technical specifications or

Design Parameters for Trail Class 2 Pack and Saddle* will provide the technical construction and maintenance parameters for the trail (i.e. tread width, surface, grade, cross-slope, clearing, turns, etc.).

USFS

Trail Planning and Management Fundamentals

Trail Type ▪ Trail Class ▪ Managed Use ▪ Designed Use ▪ Design Parameters

Updated: 1/2004

In FY02, with the national introduction of the Infra 5.0 Trails Module Linear Events and TRACS (Trail Assessment and Condition Surveys), five fundamental concepts were introduced as cornerstones of Forest Service trail planning and management:

- Trail Type
- Trail Class
- Managed Use
- Designed Use
- Design Parameters

Although not entirely new, these revised concepts provide an updated and expanded means to consistently record and communicate the intended design and management guidelines for trail design, construction, maintenance and use. Before completing documentation for TRACS Trail Management Objectives (TMO), editing these Linear Events in the Infra Trails Module, or applying these concepts in trail management, it is essential that their intent is clearly understood.

Trail Type

A fundamental trail category that indicates the predominant trail surface or trail foundation, and the general mode of travel the trail accommodates.

Trail Types are exclusive, that is there can only be one Trail Type assigned per trail or trail segment. This allows managers to identify specific trail Design Parameters (technical specifications), management needs and the cost of managing the trail for particular uses and/or seasons by trail or trail segment.

When one Trail Type "overlaps" another, identify each trail or trail segment with its respective Trail Type as a separate route, with its own Trail Name and Trail Number. The "Shared System" data attribute in the Infra Trails Module will allow you to flag the route as also being used as a different type of route or Trail Type, (presumably during a different time of the year). For example, Canyon Ridge Trail 106 may be categorized as a Standard/Terra Trail from MP 0.0 to its end termini at MP 7.4. The first three miles of that same route may also function as a Snow Trail during the winter, in which case a separate record would be established for Canyon Creek Snow Trail #206 from MP 0.0 to MP 3.0. The actual naming and numbering of trails (i.e. Standard/Terra Trails versus Snow Trails) should be consistent with local unit identification protocols.

The three fundamental Trails Types include:

Standard/Terra Trail: *The predominant foundation of the trail is ground (as opposed to snow or water); and that is designed and managed to accommodate ground-based trail use.*

Snow Trail: *The predominant foundation of the trail is snow (as opposed to ground or water); and that is designed and managed to accommodate snow-based trail use.*

Water Trail*: The predominant foundation of the trail is water (as opposed to ground or snow); and that is designed and managed to accommodate trail use by water craft. There may be ground-based Portage segments of Water Trails.*

Trail Class

The prescribed scale of trail development, representing the intended design and management standards of the trail.

- There is only one Trail Class identified per trail or trail segment.

- The National Trail Classes provide a chronological classification of trail development on a scale ranging from Trail Class 1 to Trail Class 5 (see Attachment A: Trail Class Matrix):
  - Trail Class 1: Minimal/Undeveloped Trail
  - Trail Class 2: Simple/Minor Development Trail

- Trail Class 3: Developed/Improved Trail
- Trail Class 4: Highly Developed Trail
- Trail Class 5: Fully Developed Trail

- Each Trail Class is defined in terms of applicable Tread and Traffic Flow, Obstacles, Constructed Feature and Trail Elements, Signs, Typical Recreation Environment and Experience.

- Trail Class descriptions define "typical" scenarios or combined factors, and exceptions may occur for any factor. In applying Trail Classes, choose the one that most closely matches the managed objective of the trail.

- Trail prescriptions describe the desired management of each trail, based on Forest Plan direction. These prescriptions take into account actively managed trail uses, user preferences, setting, protection of sensitive resources, and other management activities. To meet prescription, each trail is assigned an appropriate Trail Class.

- There is a direct relationship between Trail Class and Managed Use (defined below), and one cannot be determined without consideration of the other.

- These general categories are used to identify applicable Trail Design Parameters (defined below) and to identify basic indicators used for determining the cost to meet national quality standards.

- Trail Classes represent a refinement and expansion of the previously used Forest Service Management Classes: Mainline/Primary, Secondary and Way Trails.

Managed Use

Modes of travel that are actively managed and appropriate, considering the design and management of the trail.

- There may be more than one Managed Use per trail or trail segment.

- Managed Use indicates a management decision or intent to accommodate and/or encourage a specified type of trail use.

Designed Use

The intended use that controls the desired geometric design of the trail, and determines the subsequent maintenance parameters for the trail.

- There is only one Designed Use per trail or trail segment.

- Although the trail may be actively managed for more than one use, and numerous uses may be allowed, only one use is identified as the critical design driver. The Designed Use determines the technical specifications for the design, construction and maintenance of the trail or trail segment. For each Designed Use and applicable Trail Class, there is a corresponding set of nationally standardized technical specifications or Design Parameters.

- Of the actively Managed Uses that the trail is developed and managed for, the Designed Use is the single design driver that determines the technical specifications for the trail. This is somewhat subjective, but the Designed Use is most often the Managed Use that requires the highest level of development. (ie: Pack & Saddle stock require higher and wider clearance than a trail designed for Hikers). In addition to Designed Use, managers must also determine the desired development scale or Trail Class, with Trail Class 1 being the lowest level of development and Trail Class 5 the highest. On a Trail Class 1 Hiker trail, the trail is basically a deer path and in places may disappear and be reacquired later. Trail Class 5 is most often paved, or at least hardened, and is associated with a highly developed Recreation Opportunity Spectrum classification (ROS).

Designed Use / Managed Use Types

- All Terrain Vehicle
- Snow All Terrain Vehicle
- Bicycle
- Dogsled
- Hiker / Pedestrian
- Motorcycle
- Pack and Saddle
- Snowmobile
- Snowshoe
- Watercraft
- Motorized Watercraft

- Non-Motorized Watercraft
- Cross Country Ski

Design Parameters

Technical specifications for trail construction and maintenance, based on the Designed Use and Trail Class.

- The national Trail Design Parameters represent a standardized set of commonly expected construction and maintenance specifications based on Designed Use and Trail Class.

- Local deviations to the Design Parameters may be established based on specific trail conditions, topography and other factors, providing that the variations continue to reflect the general intent of the national Trail Classes.

- Design Parameters are a refinement and expansion of the previously used “Easiest, More Difficult, and Most Difficult” trail categories for communicating Forest Service construction, maintenance and management specifications.

Design Parameters include technical specifications regarding:
- Tread Width
- Surface
- Grade
- Cross-Slope
- Clearing
- Turns

APPENDIX D

FOREST SERVICE RECREATION SITE DEVELOPMENT SCALE DEFINITIONS

Development Scale	Modification Definition
0	**No site modification** o No constructed features evident at the site.
1	**Almost no site modification**. o Rustic or rudimentary improvements designed for protection of the site rather than comfort of the users. o Use of synthetic materials excluded. o Minimum controls are subtle. o No obvious regimentation. o Primary access usually over primitive roads o Spacing informal and extended to minimize contacts between users.
2	**Minimal site modification**. o Rustic or rudimentary improvements designed primarily for protection of the site rather than the comfort of the users. o Use of synthetic materials avoided. o Minimum controls are subtle. o Little obvious regimentation. o Spacing informal and extended to minimize contacts between users. o Primary access usually over primitive roads. o Interpretive services informal, almost subliminal.
3	**Moderate site modification**. o Facilities about equal for protection of natural site and comfort of users. o Contemporary/rustic design of improvements is usually based on use of native materials. Inconspicuous vehicular traffic controls usually provided. o Roads may be hard surfaced and trails formalized. o Development density about 3 family units per acre. o Primary access may be over high standard roads. o Interpretive services informal if offered, but generally direct.

4 **Heavy site modification**.
o Some facilities designed strictly for comfort and convenience of users.
o Luxury facilities not provided.
o Facility design may incorporate synthetic materials.
o Extensive use of artificial surfacing of roads and trails.
o Vehicular traffic control usually obvious.
o Primary access usually over paved roads.
o Development density 3-5 family units per acre.
o Plant materials usually native.
o Interpretive services, if offered, often formal or structured.

5 **Extensive site modification**.
o Facilities mostly designed for comfort and convenience of users and usually include flush toilets; may include showers, bathhouses, laundry facilities, and electrical hookups.
o Synthetic materials commonly used.
o Formal walks or surfaced trails.
o Regimentation of users is obvious.
o Access usually by high-speed highways.
o Development density 5 or more family units per acre.
o Plant materials may be non-native.
o Formal interpretive services usually available.
o Designs formalized and architecture may be contemporary.
o Mowed lawns and clipped shrubs not unusual.

http://www.fs.fed.us/r3/measures/Cost/Infra_RS.htm

APPENDIX E

FSORAG Technical Provisions Referenced in the FSTAG's Technical Provisions

<u>Section 5.2 Tent Pads and Tent Platforms</u>: Section-by-section analysis

The dimensions of tent pads and tent platforms are not specified because the type of tent most commonly used at campgrounds varies widely. For example, at a campground located close to a wilderness area, small tents may be commonly used, whereas at another campground with numerous amenities for children, large, multi-room family tents may be used more often. Local campground managers are the best source of information concerning the tent size most commonly used in an area.

It is not unusual to find six or seven 5-foot-by-8-foot tents in one part of a GFA. Typically, the spaces allotted for these tents are approximately 10 feet by 12 feet. The size of an accessible tent pad would need to be increased to at least 13 feet by 16 feet to accommodate a 5-foot-by-8-foot tent. If all tent spaces were required to meet the FSORAG's technical provisions, a significant amount of additional excavation would be necessary. Because most facilities provided in GFAs are for resource protection rather than visitor comfort and convenience, the scoping for tents is reduced to minimize alteration of the setting, while integrating accessibility. Thus, only at least 5% of tent pads and tent platforms in GFAs are required to comply with section 5.2, in contrast to at least 20% at recreation sites.

The difference in scoping requirements between recreation sites, with a FS Recreation Site Development Scale of 3 or higher and GFAs where the FS Development Scale is 2 of less, reflects recent findings and recommendations from studies in recreation management regarding overnight site design. These studies are making recreation managers rethink how camping units in GFAs should be designed. Typically, areas of flat terrain are the most desirable for camping. However, as use increases, the area of impact continues to expand because the terrain does not discourage campers from using every square foot of flat land available. This expanded use results in extensive loss of vegetation, soil compaction, erosion, and a general degradation of the scenic resources and recreation setting. To minimize these impacts, some recreation managers are recommending that GFA camping units be built on side slopes that are too steep for pitching tents and provide level tent

pads and tent platforms by cutting and filling the slope. This approach accommodates the need for camping units, while minimizing negative impacts on the environment by confining the use to smaller areas.

5.2 TENT PADS AND TENT PLATFORMS: Technical Provision

5.2.1 General. At least 20% of the tent pads and tent platforms provided at a recreation site, with a FS Recreation Site Development Scale of 3 or higher, shall comply with section 5.2 and shall be connected to an ORAR complying with section 2.0.

5.2.1.1. At least 5% of the tent pads and tent platforms provided in a GFA shall comply with section 5.2. Connection to an ORAR is not required.

5.2.2 Clear Floor or Ground Space. Tent pads and tent platforms shall have clear floor or ground space surrounding the tent that is at least 48 inches (1220 mm) wide. This space shall not overlap the ORAR.

> **Exception**. The clear floor or ground space for tent pads and tent platforms may be reduced to no less than 36 inches (915 mm) where one or more conditions for departure in section 1.1 exist.

5.2.3 Slope. The slope of tent pads and tent platforms shall not exceed 1:50 (2%) in any direction.

> **Exception.** Where surface conditions require a slope greater than 1:50 (2%) for proper drainage, a slope of no more than 1:33 (3%) for tent pads and tent platforms is permitted.

5.2.4 Tent Pad Surface. Tent pads shall have a surface that is firm and stable and designed to allow use of tent stakes and other securing devices.

> **Exception**. Section 5.2.4 does not apply where one or more conditions for departure in section 1.1 exist.

5.2.5 Tent Platform Surface. The surface of tent platforms shall be firm and stable. The type of surface should be appropriate to the setting and level of development.

5.2.6 Edge Protection. Where provided, edge protection for tent platforms shall be at least 3 inches (75 mm) high.

5.2.7 Connection. The surface of tent platforms shall be accessible by a ramp or transfer or directly from adjacent ground surface.

Section 6.7 Pit Toilets in General Forest Areas (GFAs): Section-by-section Analysis

In contrast to toilet buildings at recreation sites with a FS Recreation Site Development Scale of 3 or higher, pit toilets are primitive outhouses that are provided only in GFAs with a FS Development Scale of 2 of less. Like other constructed elements in GFAs, pit toilets are provided primarily for resource protection, rather than visitor comfort and convenience. Pit toilets may consist simply of a hole dug in the ground covered by a toilet riser. The pit toilet riser may or may not be surrounded by walls and may or may not have a roof. Pit toilets may be permanently installed or may be moved from one location to another as the pit is filled or the area becomes severely impacted from use. Waste in pit toilets may be disposed of directly into the pit or may be composted. Pit toilets in GFAs do not have to be connected to an ORAR.

The design of pit toilets varies widely depending on the setting, the amount of expected use, and the process used to manage the waste. An accessible pit toilet is not required to have walls, a floor, a door, or a roof. However, if a pit toilet has a riser and toilet seat, the total height of the seat and the riser must be 17 to 19 inches above the ground or floor. The riser should have vertical sides, a flat area on either side of the seat that is approximately 3 inches wide, and a seat cover that also functions as a back rest.

If the pit toilet has a constructed floor, per 304.3 of the ABAAS, it must accommodate, clear of obstructions, either a circular turning space 60 inches in diameter or a T-shaped turning space within a 60-inch square. If a door is provided, it must open out, slide, or otherwise not obstruct the clear floor or ground space in the pit toilet.

If the pit toilet has walls that will sustain 250 pounds of force, grab bars complying with 604.5 and 609 of the ABAAS must

be mounted on the walls. Privacy screens that do not support 250 pounds of force may be used at pit toilets. However, for safety reasons, grab bars must not be mounted on these lightweight screens.

Effort should be made to locate a pit toilet entrance at ground level. Some pit toilets are designed to process waste, which requires the riser to be placed above the processing unit. For these toilets, use a slope that permits the entrance to remain at ground level. If the layout of the site requires the pit toilet floor to be located above the ground, a trail or ramp complying with section 7.3 of the FSTAG must be provided from the ground to the entrance.

If a trail or ramp is not feasible because one or more conditions for departure in section 1.1 exist, steps into the pit toilet may be provided, but only as a last resort. If steps have to be used, specifications for steps similar to those used in accessible play areas are enumerated in the FSORAG. These steps can serve as transfer landings. The step treads must be at least 14 inches deep and 36 inches wide, and the step riser should be between 6 and 9 inches high. A level clear floor or ground space that is 30 inches by 48 inches must be provided along one side of the steps. One of the steps must fall between 17 and 19 inches above the clear floor or ground space. Single steps are hazards and should be avoided. Where steps are necessary, at least two steps, but preferably three, should be provided.

6.7 PIT TOILETS IN GENERAL FOREST AREAS (GFAs): Technical Provisions

6.7.1 General. All pit toilets provided in GFAs, with a FS Recreation Site Development Scale of 2 or less, shall comply with section 6.7.

6.7.2 Height. The total height of the toilet seat and the riser for a pit toilet shall be between 17 to 19 inches above the ground or floor.

6.7.3 Clear Floor or Ground Space in Pit Toilets Enclosed by Walls. In pit toilets with 4 walls or privacy screens, a clear floor or ground space of 60 inches (1525 mm) by 56 inches (1420 mm) that complies with 604.3.1 of the ABAAS shall be provided. Portions of this turning space may overlap the interior clear floor or ground space or be located directly outside the entrance. The center line of the toilet riser shall be 16 to 18 inches from the back wall, and the back of the riser shall be

flush with a sidewall.

Exception. The clear floor or ground space required by 604.3.1 of the ABAAS may be reduced to 56 inches (1420 mm) by 48 inches (1220 mm) where one or more conditions for departure in section 1.1 exist.

6.7.4 Doorways. Doorways of pit toilets shall have a clear width of at least 32 inches (815 mm) to comply with 308 and 404.2.7 of the ABAAS. If a door is provided, it shall open out, slide, or otherwise not obstruct the clear floor or ground space inside a pit toilet. To comply with 404.2.7 of the ABAAS, any door hardware provided shall be operable with one hand, without pinching, grasping, or twisting the wrist, with no more than 5 pounds of pressure.

6.7.5 Grab Bars. If a pit toilet has walls that can withstand 250 pounds of force, grab bars complying with 604.5 and 609 of the ABAAS shall be provided. Grab bars shall not be installed in a pit toilet with lightweight privacy screens.

6.7.6 Clear Floor or Ground Space in Pit Toilets That Are Not Enclosed by Walls. In pit toilets with fewer than 4 walls or privacy screens, a clear floor or ground space of 60 inches (1525 mm) by 56 inches (1420 mm) that complies with 604.3.1 of the ABAAS shall be provided.

Exception. The clear floor or ground space required by 604.3.1 of the ABAAS may be reduced to 56 inches (1420 mm) by 48 inches (1220 mm) where one or more conditions for departure in section 1.1 exist.

6.7.7 Slope. The slope of the clear floor or ground space required by sections 6.7.3, 6.7.6, and 6.7.9 shall not exceed 1:50 (2%) in any direction.

Exception 1. Where surface conditions require a slope greater than 1:50 (2%) for proper drainage, a slope of no more than 1:33 (3%) for the clear floor or ground space required by sections 6.7.3, 6.7.6, and 6.7.9 is permitted.

Exception 2. Section 6.7.7 does not apply where one or more conditions for departure in section 1.1 exist.

6.7.8 Surface. The surface of the clear floor or ground space required by section 6.7.3, 6.7.6, and 6.7.9 shall be firm and stable. The type of surface should be appropriate to the setting and level of development.

Exception. Section 6.7.8 does not apply where one or more conditions for departure in section 1.1 exist.

6.7.9 Entrance. The entrance to a pit toilet should be at ground level.

Exception 1. If the floor of a pit toilet has to be located above the ground because of operation and maintenance requirements for the pit toilet, a trail shall be provided from the ground to the entrance. The trail shall comply with section 7.3 of the FSTAG.

Exception 2. Where the floor of a pit toilet is located above the ground and a trail from the ground to the entrance is not feasible because one or more conditions for departure in section 1.1 exist, steps may be provided. The steps that lead up to the toilet building shall comply with the following:

(1) Step Tread. The step tread shall be at least 14 inches (355 mm) deep and at least 36 inches (610 mm) wide.

(2) Step Riser. The step riser shall be no more than 9 inches (205 mm) high and shall be uniform for all connected steps. Where multiple steps are required, one step shall be at least 17 inches (430 mm) but no more than 19 inches (485 mm) above the ground, so that the step can function as a transfer platform.

(3) Clear Floor or Ground Space. To comply with 305.3 of the ABAAS, clear floor or ground space of at least 30 inches (760 mm) by 48 inches (1220 mm) shall be provided adjacent to one unobstructed side of the steps and shall be positioned so that a person in a wheelchair can transfer onto a step that is at least 17 inches (430 mm) but no more than 19 inches (485 mm) above the clear floor or ground space.

APPENDIX E

Provisions of the Architectural Barriers Act Accessibility Standards that are referenced in the FSORAG Technical Provisions

The Architectural Barriers Act Accessibility Standards are contained in the ABA chapters 1 and 2 and 3 through 10 of the Americans with Disabilities Act / Architectural Barriers Act Accessibility Standards. (www.access-board.gov).

F221.2.1.1 - Assembly Areas:
(a) In places of assembly with fixed seating accessible wheelchair locations shall comply with 802 of the Architectural Barriers Act Accessibility Standards and shall be provided consistent with the following table:

F221.2.1.1 Number of Wheelchair Spaces in Assembly Areas

Number of Seats	Minimum Number of Required Wheelchair Spaces
4 to 25	1
26 to 50	2
51 to 150	4
151 to 300	5
301 to 500	6
501 to 5000	6, plus 1 for each 150, or fraction thereof, between 501 through

	5000
5001 and over	36, plus 1 for each 200, or fraction thereof, over 5000

F221.2.2 - Integration
Wheelchair spaces shall be an integral part of the seating plan.

304 - Turning Space

304.1 General. Turning space shall comply with 304.

304.2 Floor or Ground Surfaces. Floor or ground surfaces of a turning space shall comply with 302. Changes in level are not permitted.
EXCEPTION: Slopes not steeper than 1:48 shall be permitted.

Advisory 304.2 Floor or Ground Surface Exception. As used in this section, the phrase "changes in level" refers to surfaces with slopes and to surfaces with abrupt rise exceeding that permitted in Section 303.3. Such changes in level are prohibited in required clear floor and ground spaces, turning spaces, and in similar spaces where people using wheelchairs and other mobility devices must park their mobility aids such as in wheelchair spaces, or maneuver to use elements such as at doors, fixtures, and telephones. The exception permits slopes not steeper than 1:48.

304.3 Size. Turning space shall comply with 304.3.1 or 304.3.2.

304.3.1 Circular Space. The turning space shall be a space of 60 inches (1525 mm) diameter minimum. The space shall be permitted to include knee and toe clearance complying with 306.

304.3.2 T-Shaped Space. The turning space shall be a T-shaped space within a 60 inch (1525 mm) square minimum with arms and base 36 inches (915 mm) wide minimum. Each arm of the T shall be clear of obstructions 12 inches (305 mm) minimum in each direction and the base shall be clear of obstructions 24 inches (610 mm) minimum. The space shall be permitted to include knee and toe clearance complying with 306 only at the end of either the base or one arm.

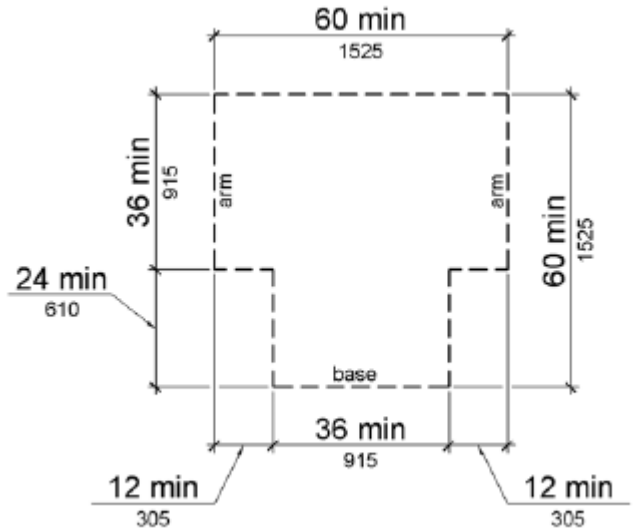

Figure 304.3.2 T-Shaped Turning Space

305 - Clear Floor or Ground Space for Wheelchairs.

305.1 General. Clear floor or ground space shall comply with 305.

305.2 Floor or Ground Surfaces. Floor or ground surfaces of a clear floor or ground space shall comply with 302. Changes in level are not permitted.

EXCEPTION: Slopes not steeper than 1:48 shall be permitted.

305.3 Size. The clear floor or ground space shall be 30 inches (760 mm) minimum by 48 inches (1220 mm) minimum.

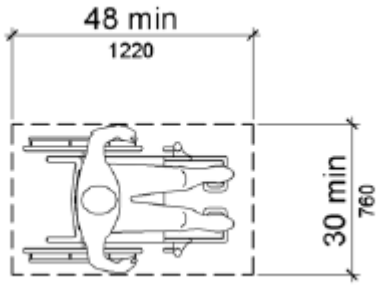

Figure 305.3 Clear Floor or Ground Space

305.4 Knee and Toe Clearance. Unless otherwise specified, clear floor or ground space shall be permitted to include knee and toe clearance complying with 306.

305.5 Position. Unless otherwise specified, clear floor or ground space shall be positioned for either forward or parallel approach to an element.

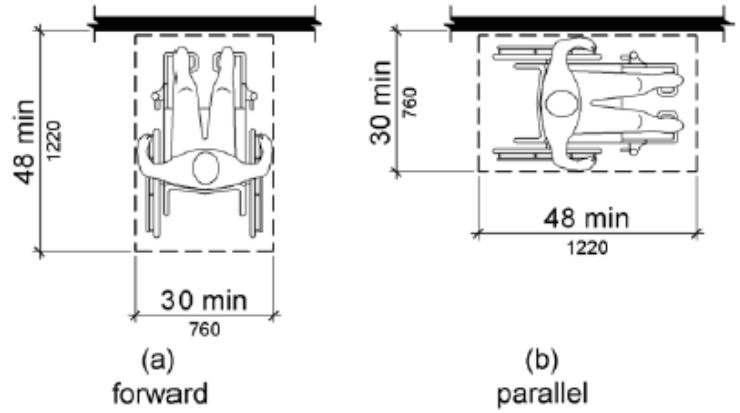

Figure 305.5 Position of Clear Floor or Ground Space

305.6 Approach. One full unobstructed side of the clear floor or ground space shall adjoin an accessible route or adjoin another clear floor or ground space.

305.7 Maneuvering Clearance. Where a clear floor or ground space is located in an alcove or otherwise confined on all or part of three sides, additional maneuvering clearance shall be provided in accordance with 305.7.1 and 305.7.2.

305.7.1 Forward Approach. Alcoves shall be 36 inches (915 mm)wide minimum where the depth exceeds 24 inches (610 mm).

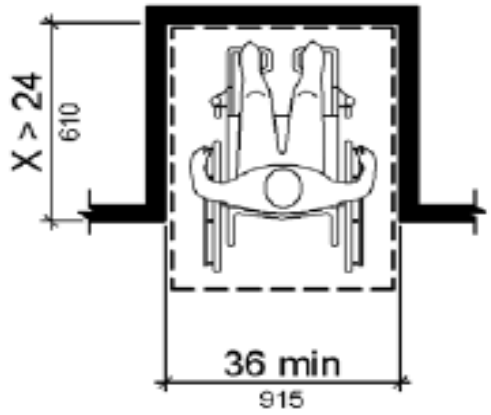

Figure 305.7.1 Maneuvering Clearance in an Alcove, Forward Approach

305.7.2 Parallel Approach. Alcoves shall be 60 inches (1525 mm) wide minimum where the depth exceeds 15 inches (380 mm).

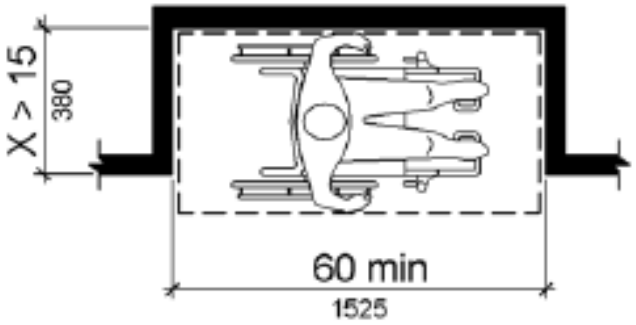

Figure 305.7.2 Maneuvering Clearance in an Alcove, Parallel Approach

306 Knee and Toe Clearance

306.1 General. Where space beneath an element is included as part of clear floor or ground space or turning space, the space shall comply with 306. Additional space shall not be prohibited beneath an element but shall not be considered as part of the clear floor or ground space or turning space.

Advisory 306.1 General. Clearances are measured in relation to the usable clear floor space, not necessarily to the vertical support for an element. When determining clearance under an object for required turning or maneuvering space, care should be taken to ensure the space is clear of any obstructions.

306.2 Toe Clearance.

306.2.1 General. Space under an element between the finish floor or ground and 9 inches (230 mm) above the finish floor or ground shall be considered toe clearance and shall comply with 306.2.

306.2.2 Maximum Depth. Toe clearance shall extend 25 inches (635 mm) maximum under an element.

306.2.3 Minimum Required Depth. Where toe clearance is required at an element as part of a clear floor space, the toe clearance shall extend 17 inches (430 mm) minimum under the element.

306.2.4 Additional Clearance. Space extending greater than 6 inches (150 mm) beyond the available knee clearance at 9 inches (230 mm) above the finish floor or ground shall not be considered toe clearance.

306.2.5 Width. Toe clearance shall be 30 inches (760 mm) wide minimum.

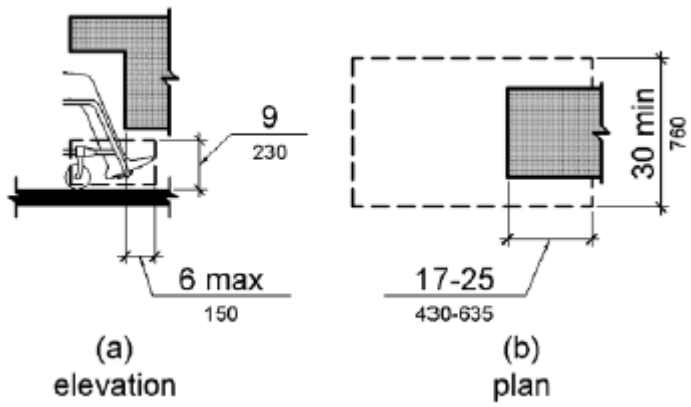

Figure 306.2 Toe Clearance

306.3 Knee Clearance.

306.3.1 General. Space under an element between 9 inches (230 mm) and 27 inches (685 mm) above the finish floor or ground shall be considered knee clearance and shall comply with 306.3.

306.3.2 Maximum Depth. Knee clearance shall extend 25 inches (635 mm) maximum under an element at 9 inches (230 mm) above the finish floor or ground.

306.3.3 Minimum Required Depth. Where knee clearance is required under an element as part of a clear floor space, the knee clearance shall be 11 inches (280 mm) deep minimum at 9 inches (230 mm) above the finish floor or ground, and 8 inches (205 mm) deep minimum at 27 inches (685 mm) above the finish floor or ground.

306.3.4 Clearance Reduction. Between 9 inches (230 mm) and 27 inches (685 mm) above the finish floor or ground, the knee clearance shall be permitted to reduce at a rate of 1 inch (25 mm) in depth for each 6 inches (150 mm) in height.

306.3.5 Width. Knee clearance shall be 30 inches (760 mm) wide minimum.

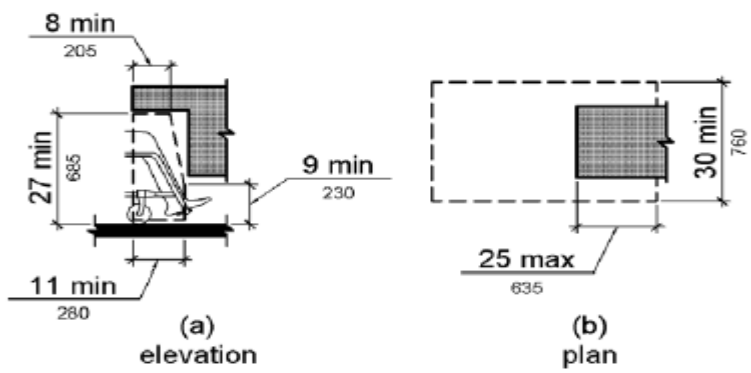

Figure 306.3 Knee Clearance

307 Protruding Objects

307.1 General. Protruding objects shall comply with 307.

307.2 Protrusion Limits. Objects with leading edges more than 27 inches (685 mm) and not more than 80 inches (2030 mm) above the finish floor or ground shall protrude 4 inches (100 mm) maximum horizontally into the circulation path.
EXCEPTION: Handrails shall be permitted to protrude 4 1/2 inches (115 mm) maximum.

Advisory 307.2 Protrusion Limits. When a cane is used and the element is in the detectable range, it gives a person sufficient time to detect the element with the cane before there is body contact. Elements located on circulation paths, including operable elements, must comply with requirements for protruding objects. For example, awnings and their supporting structures cannot reduce the minimum required vertical clearance. Similarly, casement windows, when open, cannot encroach more than 4 inches (100 mm) into circulation paths above 27 inches (685 mm).

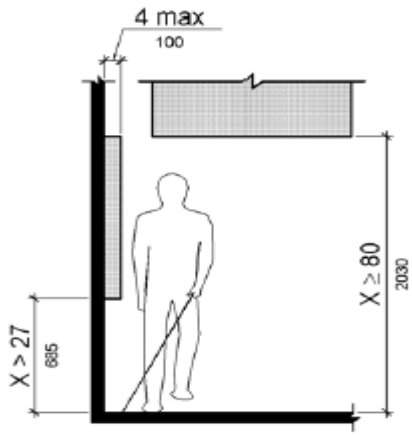

Figure 307.2Limits of Protruding

Objects

307.3 Post-Mounted Objects. Free-standing objects mounted on posts or pylons shall overhang circulation paths 12 inches (305 mm) maximum when located 27 inches (685 mm) minimum and 80 inches (2030 mm) maximum above the finish floor or ground. Where a sign or other obstruction is mounted between posts or pylons and the clear distance between the posts or pylons is greater than 12 inches (305 mm), the lowest edge of such sign or obstruction shall be 27 inches (685 mm) maximum or 80 inches (2030 mm) minimum above the finish floor or ground.
EXCEPTION: The sloping portions of handrails serving stairs and ramps shall not be required to comply with 307.3.

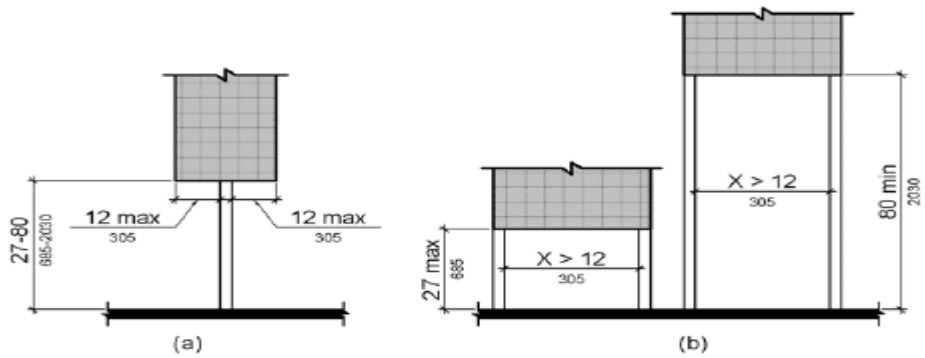

Figure 307.3 Post-Mounted Protruding Objects

307.4 Vertical Clearance. Vertical clearance shall be 80 inches (2030 mm) high minimum. Guardrails or other barriers shall be provided where the vertical clearance is less than 80 inches (2030 mm) high. The leading edge of such guardrail or barrier shall be located 27 inches (685 mm) maximum above the finish floor or ground.
EXCEPTION: Door closers and door stops shall be permitted to be 78 inches (1980 mm) minimum above the finish floor or ground.

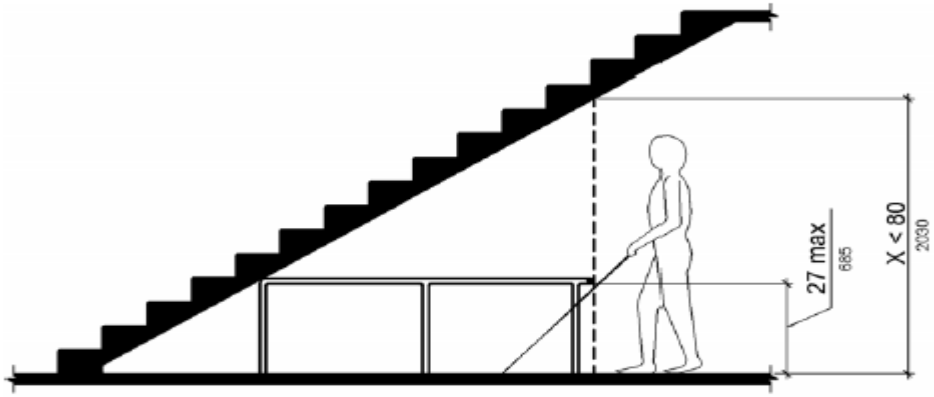

Figure 307.4 Vertical Clearance

. Protruding objects shall not reduce the clear width required for accessible routes.

308 Reach Ranges

308.1 General. Reach ranges shall comply with 308.

Advisory 308.1 General. The following table provides guidance on reach ranges for children according to age where building elements such as coat hooks, lockers, or operable parts are designed for use primarily by children. These dimensions apply to either forward or side reaches. Accessible elements and operable parts designed for adult use or children over age 12 can be located outside these ranges but must be within the adult reach ranges required by 308.
Children's Reach Ranges

Forward or Side Reach	Ages 3 and 4	Ages 5 through 8	Ages 9 through 12
High (maximum)	36 in (915 mm)	40 in (1015 mm)	44 in (1120 mm)
Low (minimum)	20 in (510 mm)	18 in (455 mm)	16 in (405 mm)

308.2 Forward Reach.

308.2.1 Unobstructed. Where a forward reach is unobstructed, the high forward reach shall be 48 inches (1220 mm) maximum and the low forward reach shall be 15 inches (380 mm) minimum above the finish floor or ground.

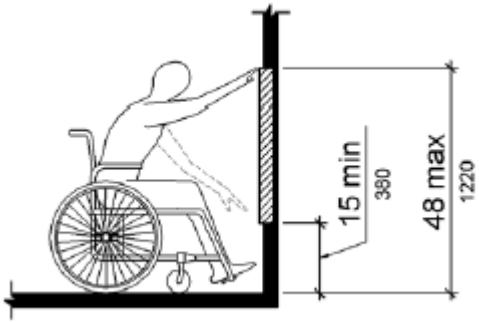

Figure 308.2.1 Unobstructed Forward Reach

308.2.2 Obstructed High Reach. Where a high forward reach is over an obstruction, the clear floor space shall extend beneath the element for a distance not less than the required reach depth over the obstruction. The high forward reach shall be 48 inches (1220 mm) maximum where the reach depth is 20 inches (510 mm) maximum. Where the reach depth exceeds 20 inches (510 mm), the high forward reach shall be 44 inches (1120 mm) maximum and the reach depth shall be 25 inches (635 mm) maximum.

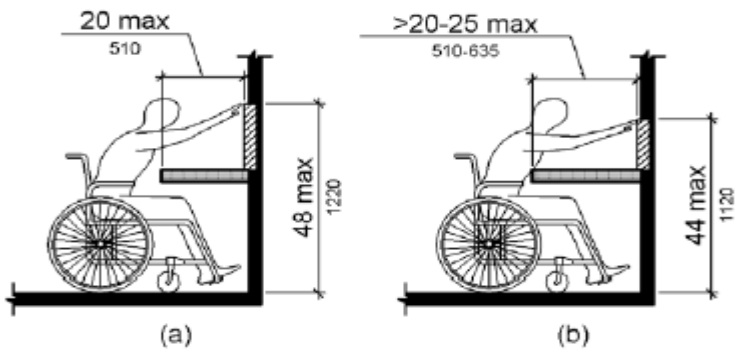

Figure 308.2.2 Obstructed High Forward Reach

308.3 Side Reach.

308.3.1 Unobstructed. Where a clear floor or ground space allows a parallel approach to an element and the side reach is unobstructed, the high side reach shall be 48 inches (1220 mm) maximum and the low side reach shall be 15 inches (380 mm) minimum above the finish floor or ground.

EXCEPTIONS:

1. An obstruction shall be permitted between the clear floor or ground space and the element where the depth of the obstruction is 10 inches (255 mm) maximum.
2. Operable parts of fuel dispensers shall be permitted to be 54 inches (1370 mm) maximum measured from the surface of the vehicular way where fuel dispensers are installed on existing curbs.

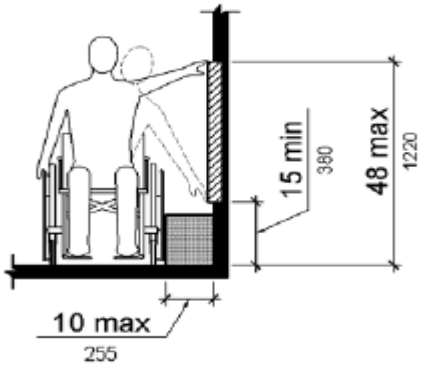

Figure 308.3.1 Unobstructed Side Reach

308.3.2 Obstructed High Reach. Where a clear floor or ground space allows a parallel approach to an element and the high side reach is over an obstruction, the height of the obstruction shall be 34 inches (865 mm) maximum and the depth of the obstruction shall be 24 inches (610 mm) maximum. The high side reach shall be 48 inches (1220 mm) maximum for a reach depth of 10 inches (255 mm) maximum. Where the reach depth exceeds 10 inches (255 mm), the high side reach shall be 46 inches (1170 mm) maximum for a reach depth of 24 inches (610 mm) maximum.

EXCEPTIONS:

1. The top of washing machines and clothes dryers shall be permitted to be 36 inches (915 mm) maximum above the finish floor.

2. Operable parts of fuel dispensers shall be permitted to be 54 inches (1370 mm) maximum measured from the surface of the vehicular way where fuel dispensers are installed on existing curbs.

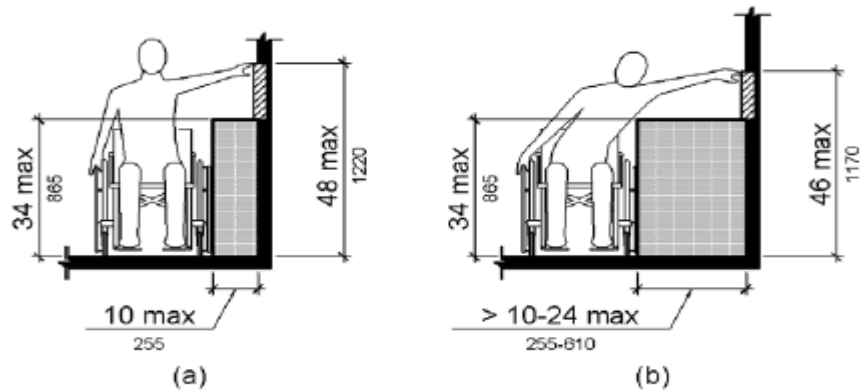

Figure 308.3.2 Obstructed High Side Reach

309 Operable Parts

309.1 General. Operable parts shall comply with 309.

309.2 Clear Floor Space. A clear floor or ground space complying with 305 shall be provided.

309.3 Height. Operable parts shall be placed within one or more of the reach ranges specified in 308.

309.4 Operation. Operable parts shall be operable with one hand and shall not require tight grasping, pinching, or twisting of the wrist. The force required to activate operable parts shall be 5 pounds (22.2 N) maximum.

EXCEPTION:

Gas pump nozzles shall not be required to provide operable parts that have an activating force of 5 pounds (22.2 N) maximum.

404.2.3 Doorways - Clear Width. Door openings shall provide a clear width of 32 inches (815 mm) minimum. Clear openings of doorways with swinging doors shall be measured between the face of the door and the stop, with the door open 90 degrees. Openings more than 24 inches (610 mm) deep shall provide a clear opening of 36 inches (915 mm) minimum. There shall be no projections into the required clear opening width lower than 34 inches (865 mm) above the finish floor or ground. Projections into the clear opening width between 34 inches (865 mm) and 80 inches (2030 mm) above the finish floor or ground shall not exceed 4 inches (100 mm).

EXCEPTIONS: 1. In alterations, a projection of 5/8 inch (16 mm) maximum into the required clear width shall be permitted for the latch side stop.

2. Door closers and door stops shall be permitted to be 78 inches (1980 mm) minimum above the finish floor or ground.

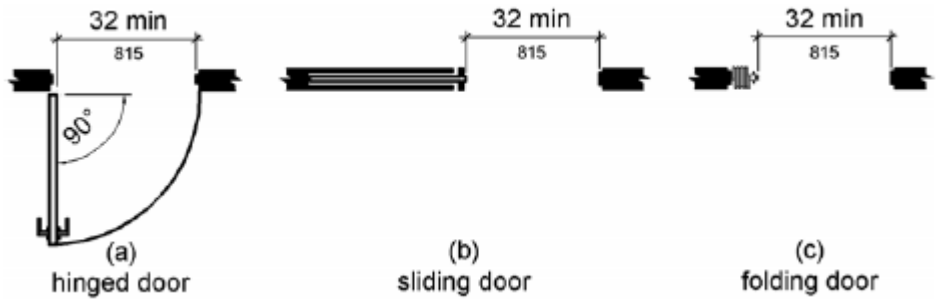

Figure 404.2.3 Clear Width of Doorways

404.2.7 Door and Gate Hardware. Handles, pulls, latches, locks, and other operable parts on doors and gates shall comply with 309.4. Operable parts of such hardware shall be 34 inches (865 mm) minimum and 48 inches (1220 mm) maximum above the finish floor or ground. Where sliding doors are in the fully open position, operating hardware shall be exposed and usable from both sides.

603 Toilet and Bathing Rooms (for toilet buildings with a single riser such as SSTs etc.- but not for Pit toilets…see definition of pit toilet in Technical Provisions section of FSORAG)

603.1 General. Toilet and bathing rooms shall comply with 603.

603.2 Clearances. Clearances shall comply with 603.2.

603.2.1 Turning Space. Turning space complying with 304 shall be provided within the room.

603.2.2 Overlap. Required clear floor spaces, clearance at fixtures, and turning space shall be permitted to overlap.

603.2.3 Door Swing. Doors shall not swing into the clear floor space or clearance required for any fixture. Doors shall be permitted to swing into the required turning space.
EXCEPTIONS: 1. Doors to a toilet room or bathing room for a single occupant accessed only through a private office and not for common use or public use shall be permitted to swing into the clear floor space or clearance provided the swing of the door can be reversed to comply with 603.2.3.
2. Where the toilet room or bathing room is for individual use and a clear floor space complying with 305.3 is provided within the room beyond the arc of the door swing, doors shall be permitted to swing into the clear floor space or clearance required for any fixture.

Advisory 603.2.3 Door Swing Exception 1. At the time the door is installed, and if the door swing is reversed in the future, the door must meet all the requirements specified in 404. Additionally, the door swing cannot reduce the required width of an accessible route. Also, avoid violating other building or life safety codes when the door swing is reversed.

603.3 Mirrors. Mirrors located above lavatories or countertops shall be installed with the bottom edge of the reflecting surface 40 inches (1015 mm) maximum above the finish floor or ground. Mirrors not located above lavatories or countertops shall be installed with the bottom edge of the reflecting surface 35 inches (890 mm) maximum above the finish floor or ground.

Advisory 603.3 Mirrors. A single full-length mirror can accommodate a greater number of people, including children. In order for mirrors to be usable by people who are ambulatory and people and people who use wheelchairs, the top edge of mirrors should be 74 inches (1880 mm) minimum from the floor or ground.

603.4 Coat Hooks and Shelves. Coat hooks shall be located within one of the reach ranges specified in 308. Shelves shall be located 40 inches (1015 mm) minimum and 48 inches (1220 mm) maximum above the finish floor.

604 Water Closets and Toilet Compartments (for toilet buildings with multiple risers provided at recreation sites with FS Recreation Site Development Scale of 3 or higher...and for the Exception under Pit Toilets in General Forest Areas FSORAG 6.6)

604.1 General. Water closets and toilet compartments shall comply with 604.2 through 604.8.**EXCEPTION:** Water closets and toilet compartments for children's use shall be permitted to comply with 604.9.

604.2 Location. The water closet shall be positioned with a wall or partition to the rear and to one side. The centerline of the water closet shall be 16 inches (405 mm) minimum to 18 inches (455 mm) maximum from the side wall or partition, except that the water closet shall be 17 inches (430 mm) minimum and 19 inches (485 mm) maximum from the side wall or partition in the ambulatory accessible toilet compartment specified in 604.8.2. Water closets shall be arranged for a left-hand or right-hand approach.

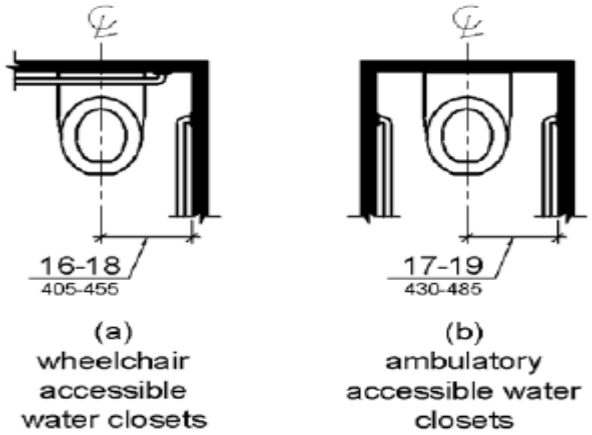

Figure 604.2 Water Closet Location

604.3 Clearance. Clearances around water closets and in toilet compartments shall comply with 604.3.

604.3.1 Size. Clearance around a water closet shall be 60 inches (1525 mm) minimum measured perpendicular from the side wall and 56 inches (1420 mm) minimum measured perpendicular from the rear wall.

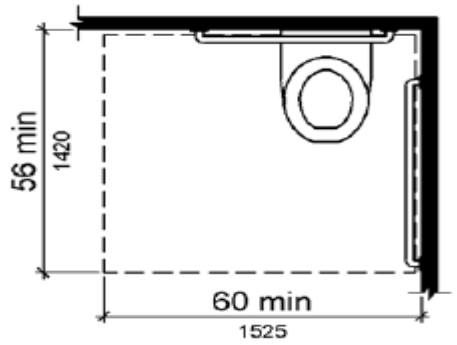

Figure 604.3.1 Size of Clearance at Water Closets

604.3.2 Overlap. The required clearance around the water closet shall be permitted to overlap the water closet, associated grab bars, dispensers, sanitary napkin disposal units, coat hooks, shelves, accessible routes, clear floor space and clearances required at other fixtures, and the turning space. No other fixtures or obstructions shall be located within the required water closet clearance.

EXCEPTION: In residential dwelling units, a lavatory complying with 606 shall be permitted on the rear wall 18 inches (455 mm) minimum from the water closet centerline where the clearance at the water closet is 66 inches (1675 mm) minimum measured perpendicular from the rear wall.

604.4 Seats. The seat height of a water closet above the finish floor shall be 17 inches (430 mm) minimum and 19 inches (485 mm) maximum measured to the top of the seat. Seats shall not be sprung to return to a lifted position.

EXCEPTIONS: 1. A water closet in a toilet room for a single occupant accessed only through a private office and not for common use or public use shall not be required to comply with 604.4.

2. In residential dwelling units, the height of water closets shall be permitted to be 15 inches (380 mm) minimum and 19 inches (485 mm) maximum above the finish floor measured to the top of the seat.

604.5 Grab Bars. Grab bars for water closets shall comply with 609. Grab bars shall be provided on the side wall closest to the water closet and on the rear wall.

Advisory 604.5 Grab Bars Exception 2. Reinforcement must be sufficient to permit the installation of rear and side wall grab bars that fully meet all accessibility requirements including, but not limited to, required length, installation height, and structural strength.

604.5.1 Side Wall. The side wall grab bar shall be 42 inches (1065 mm) long minimum, located 12 inches (305 mm) maximum from the rear wall and extending 54 inches (1370 mm) minimum from the rear wall.

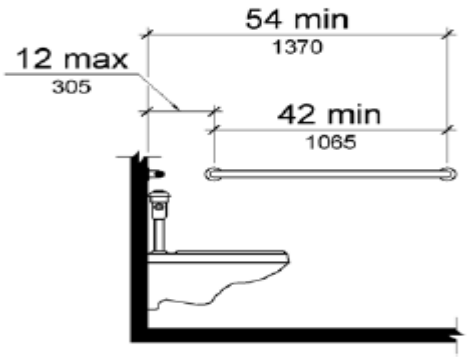

Figure 604.5.1 Side Wall Grab Bar at Water Closets

604.5.2 Rear Wall. The rear wall grab bar shall be 36 inches (915 mm) long minimum and extend from the centerline of the water closet 12 inches (305 mm) minimum on one side and 24 inches (610 mm) minimum on the other side.

EXCEPTIONS: 1. The rear grab bar shall be permitted to be 24 inches (610 mm) long minimum, centered on the water closet, where wall space does not permit a length of 36 inches (915 mm) minimum due to the location of a recessed fixture adjacent to the water closet.

2. Where an administrative authority requires flush controls for flush valves to be located in a position that conflicts with the location of the rear grab bar, then the rear grab bar shall be permitted to be split or shifted to the open side of the toilet area.

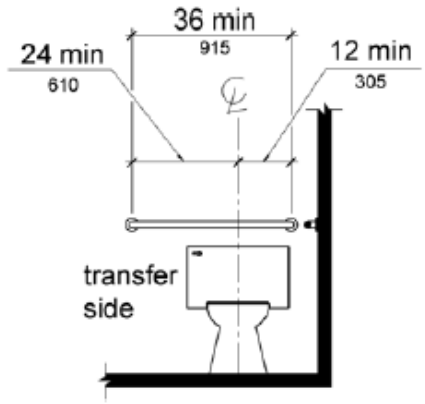

Figure 604.5.2 Rear Wall Grab Bar at Water Closets

604.6 Flush Controls. Flush controls shall be hand operated or automatic. Hand operated flush controls shall comply with 309. Flush controls shall be located on the open side of the water closet except in ambulatory accessible compartments complying with 604.8.2.

Advisory 604.6 Flush Controls. If plumbing valves are located directly behind the toilet seat, flush valves and related plumbing can cause injury or imbalance when a person leans back against them. To prevent causing injury or imbalance, the plumbing can be located behind walls or to the side of the toilet; or if approved by the local authority having jurisdiction, provide a toilet seat lid.

604.7 Dispensers. Toilet paper dispensers shall comply with 309.4 and shall be 7 inches (180 mm) minimum and 9 inches (230 mm) maximum in front of the water closet measured to the centerline of the dispenser. The outlet of the dispenser shall be 15 inches (380 mm) minimum and 48 inches (1220 mm) maximum above the finish floor and shall not be located behind grab bars. Dispensers shall not be of a type that controls delivery or that does not allow continuous paper flow.

Advisory 604.7 Dispensers. If toilet paper dispensers are installed above the side wall grab bar, the outlet of the toilet paper dispenser must be 48 inches (1220 mm) maximum above the finish floor and the top of the gripping surface of the grab bar must be 33 inches (840 mm) minimum and 36 inches (915 mm) maximum above the finish floor.

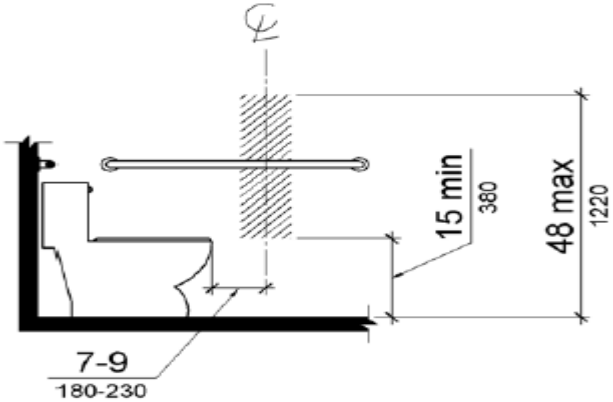

Figure 604.7 Dispenser Outlet Location

604.8 Toilet Compartments. Wheelchair accessible toilet compartments shall meet the requirements of 604.8.1 and 604.8.3. Compartments containing more than one plumbing fixture shall comply with 603. Ambulatory accessible compartments shall comply with 604.8.2 and 604.8.3.

604.8.1 Wheelchair Accessible Compartments. Wheelchair accessible compartments shall comply with 604.8.1.

604.8.1.1 Size. Wheelchair accessible compartments shall be 60 inches (1525 mm) wide minimum measured perpendicular to the side wall, and 56 inches (1420 mm) deep minimum for wall hung water closets and 59 inches (1500 mm) deep minimum for floor mounted water closets measured perpendicular to the rear wall. Wheelchair accessible compartments for children's use shall be 60 inches (1525 mm) wide minimum measured perpendicular to the side wall, and 59 inches (1500 mm) deep minimum for wall hung and floor mounted

water closets measured perpendicular to the rear wall.

Advisory 604.8.1.1 Size. The minimum space required in toilet compartments is provided so that a person using a wheelchair can maneuver into position at the water closet. This space cannot be obstructed by baby changing tables or other fixtures or conveniences, except as specified at 604.3.2 (Overlap). If toilet compartments are to be used to house fixtures other than those associated with the water closet, they must be designed to exceed the minimum space requirements. Convenience fixtures such as baby changing tables must also be accessible to people with disabilities as well as to other users. Toilet compartments that are designed to meet, and not exceed, the minimum space requirements may not provide adequate space for maneuvering into position at a baby changing table.

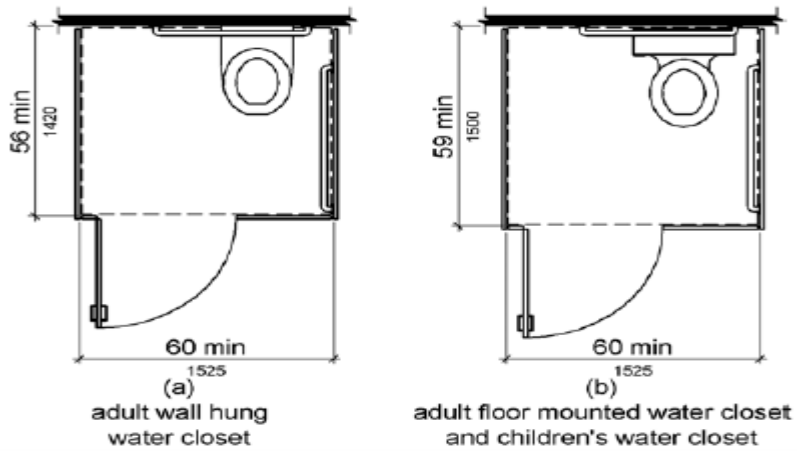

Figure 604.8.1.1 Size of Wheelchair Accessible Toilet Compartment

604.8.1.2 Doors. Toilet compartment doors, including door hardware, shall comply with 404 except that if the approach is to the latch side of the compartment door, clearance between the door side of the compartment and any obstruction shall be 42 inches (1065 mm) minimum. Doors shall be located in the front partition or in the side wall or partition farthest from the water closet. Where located in the front partition, the door opening shall be 4 inches (100 mm) maximum from the side wall or partition farthest from the water closet. Where located in the side wall or partition, the door opening shall be 4 inches (100 mm) maximum from the front partition. The door shall be self-closing. A door pull complying with 404.2.7 shall be placed on both sides of the door near the latch. Toilet compartment doors shall not swing into the minimum required compartment area.

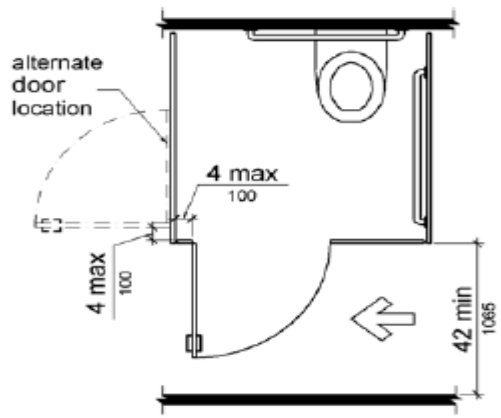

Figure 604.8.1.2 Wheelchair Accessible Toilet Compartment Doors

604.8.1.3 Approach. Compartments shall be arranged for left-hand or right-hand approach to the water closet.

604.8.1.4 Toe Clearance. The front partition and at least one side partition shall provide a toe clearance of 9 inches (230 mm) minimum above the finish floor and 6 inches (150 mm) deep minimum beyond the compartment-side face of the partition, exclusive of partition support members. Compartments for children's use shall provide a toe clearance of 12 inches (305 mm) minimum above the finish floor.

EXCEPTION: Toe clearance at the front partition is not required in a compartment greater than 62 inches (1575 mm) deep with a wall-hung water closet or 65 inches (1650 mm) deep with a floor-mounted water closet. Toe clearance at the side partition is not required in a compartment greater than 66 inches (1675 mm) wide. Toe clearance at the front partition is not required in a compartment for children's use that is greater than 65 inches (1650 mm) deep.

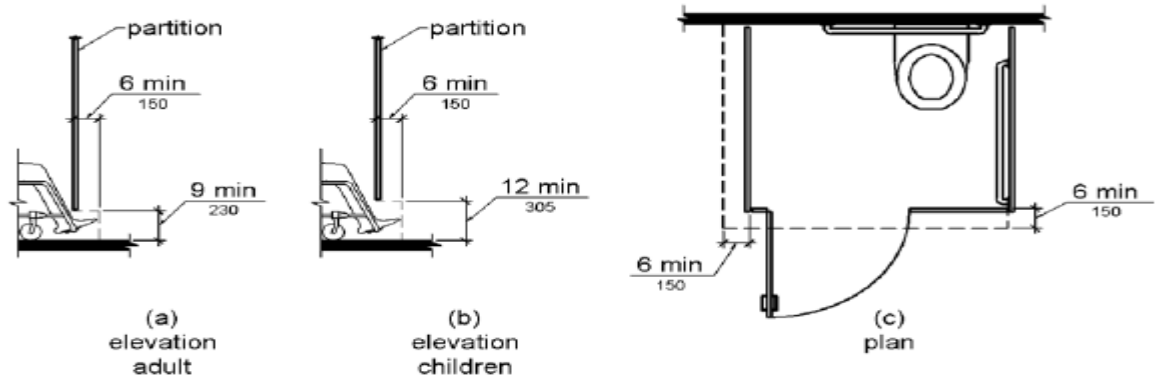

Figure 604.8.1.4 Wheelchair Accessible Toilet Compartment Toe Clearance

604.8.1.5 Grab Bars. Grab bars shall comply with 609. A side-wall grab bar complying with 604.5.1 shall be provided and shall be located on the wall closest to the water closet. In addition, a rear-wall grab bar complying with 604.5.2 shall be provided.

604.8.2 Ambulatory Accessible Compartments. Ambulatory accessible compartments shall comply with 604.8.2.

604.8.2.1 Size. Ambulatory accessible compartments shall have a depth of 60 inches (1525 mm) minimum and a width of 35 inches (890 mm) minimum and 37 inches (940 mm) maximum.

604.8.2.2 Doors. Toilet compartment doors, including door hardware, shall comply with 404, except that if the approach is to the latch side of the compartment door, clearance between the door side of the compartment and any obstruction shall be 42 inches (1065 mm) minimum. The door shall be self-closing. A door pull complying with 404.2.7 shall be placed on both sides of the door near the latch. Toilet compartment doors shall not swing into the minimum required compartment area.

604.8.2.3 Grab Bars. Grab bars shall comply with 609. A side-wall grab bar complying with 604.5.1 shall be provided on both sides of the compartment.

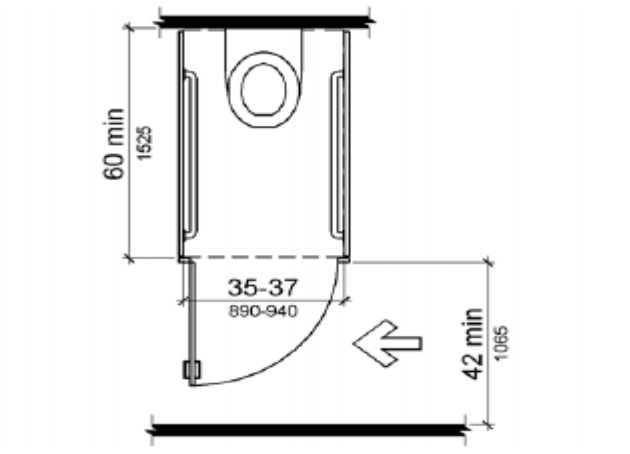

Figure 604.8.2 Ambulatory Accessible Toilet Compartment

604.8.3 Coat Hooks and Shelves. Coat hooks shall be located within one of the reach ranges specified in 308. Shelves shall be located 40 inches (1015 mm) minimum and 48 inches (1220 mm) maximum above the finish floor.

608.6 Shower Spray Unit and Water. A shower spray unit with a hose 59 inches (1500 mm) long minimum that can be used both as a fixed-position shower head and as a hand-held shower shall be provided. The shower spray unit shall have an on/off control with a non-positive shut-off. If an adjustable-height shower head on a vertical bar is used, the bar shall be installed so as not to obstruct the use of grab bars. Shower spray units shall deliver water that is 120°F (49°C) maximum.

EXCEPTION: A fixed shower head located at 48 inches (1220 mm) maximum above the shower finish floor shall be permitted instead of a hand-held spray unit in facilities that are not medical care facilities, long-term care facilities, transient lodging guest rooms, or residential dwelling units.

Advisory 608.6 Shower Spray Unit and Water. Ensure that hand-held shower spray units are capable of delivering water pressure substantially equivalent to fixed shower heads.

609 Grab Bars

609.1 General. Grab bars in toilet facilities and bathing facilities shall comply with 609.

609.2 Cross Section. Grab bars shall have a cross section complying with 609.2.1 or 609.2.2.

609.2.1 Circular Cross Section. Grab bars with circular cross sections shall have an outside diameter of 1 1/4 inches (32 mm) minimum and 2 inches (51 mm) maximum.
609.2.2 Non-Circular Cross Section. Grab bars with non-circular cross sections shall have a cross-section dimension of 2 inches (51 mm) maximum and a perimeter dimension of 4 inches (100 mm) minimum and 4.8 inches (120 mm) maximum.

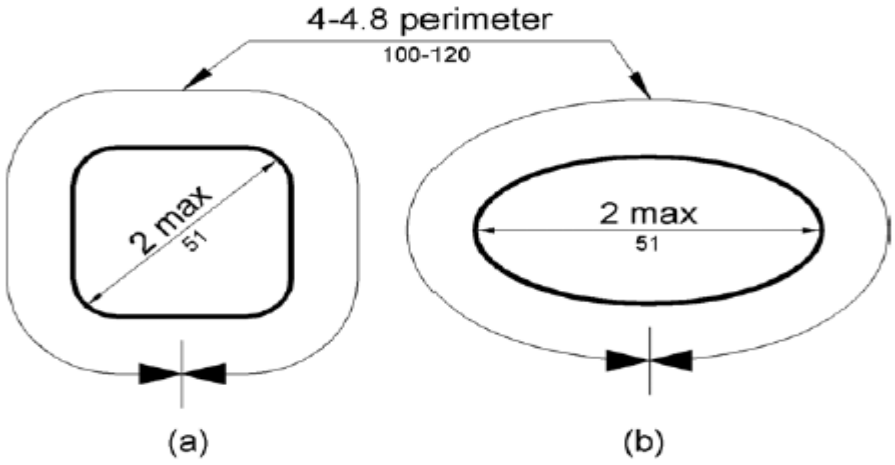

Figure 609.2.2 Grab Bar Non-Circular Cross Section

609.3 Spacing. The space between the wall and the grab bar shall be 1 1/2 inches (38 mm). The space between the grab bar and projecting objects below and at the ends shall be 1 1/2 inches (38 mm) minimum. The space between the grab bar and projecting objects above shall be 12 inches (305 mm) minimum.
EXCEPTION: The space between the grab bars and shower controls, shower fittings, and other grab bars above shall be permitted to be 1 1/2 inches (38 mm) minimum.

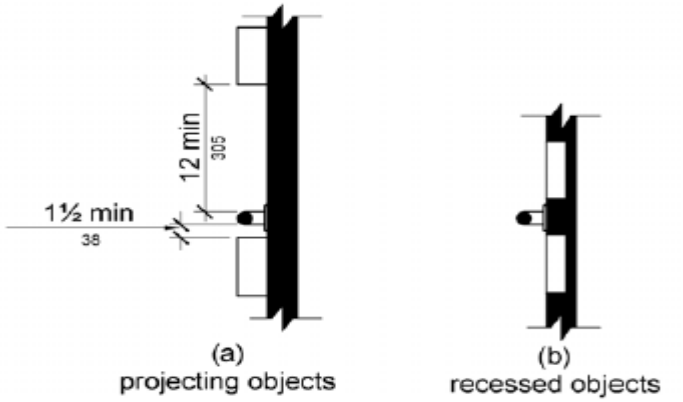

Figure 609.3 Spacing of Grab Bars

609.4 Position of Grab Bars. Grab bars shall be installed in a horizontal position, 33 inches (840 mm) minimum and 36 inches (915 mm) maximum above the finish floor measured to the top of the gripping surface, except that at water closets for children's use complying with 604.9, grab bars shall be installed in a horizontal position 18 inches (455 mm) minimum and 27 inches (685 mm) maximum above the finish floor measured to the top of the gripping surface. The height of the lower grab bar on the back wall of a bathtub shall comply with 607.4.1.1 or 607.4.2.1.

609.5 Surface Hazards. Grab bars and any wall or other surfaces adjacent to grab bars shall be free of sharp or abrasive elements and shall have rounded edges.

609.6 Fittings. Grab bars shall not rotate within their fittings.

609.7 Installation. Grab bars shall be installed in any manner that provides a gripping surface at the specified locations and that does not obstruct the required clear floor space.

609.8 Structural Strength. Allowable stresses shall not be exceeded for materials used when a vertical or horizontal force of 250 pounds (1112 N) is applied at any point on the grab bar, fastener, mounting device, or supporting structure.

SIGNAGE

F216 Signs

703.7 Symbols of Accessibility. Symbols of accessibility shall comply with 703.7.

703.7.1 Finish and Contrast. Symbols of accessibility and their background shall have a non-glare finish. Symbols of accessibility shall contrast with their background with either a light symbol on a dark background or a dark symbol on a light background.

Advisory 703.7.1 Finish and Contrast. Signs are more legible for persons with low vision when characters contrast as much as possible with their background. Additional factors affecting the ease with which the text can be distinguished from its background include shadows cast by lighting sources, surface glare, and the uniformity of the text and background colors and textures.

703.7.2 Symbols.

703.7.2.1 International Symbol of Accessibility. The International Symbol of Accessibility shall comply with Figure 703.7.2.1.

Figure 703.7.2.1 International Symbol of Accessibility

Elements and spaces of accessible facilities that shall be identified by the International Symbol of Accessibility:

- Accessible parking spaces in parking lots with designated parking spaces (F216.5)
  where there are 5 or more parking spaces, including accessible parking spaces, on a site. (F216.5.1)
  - No ISA at parking spurs provided at camping unit
- Accessible loading zone (F 216.8) Accessible restrooms and bathing facilities.(F216.8)
- If the main entrance to a building is not accessible, the ISA and an arrow are to be posted to direct to closest accessible. (F216.6)
- Accessible Area of Refuge inside multi story buildings (F216.4.2)
- Accessible means of egress out of a building (F216.4.3)