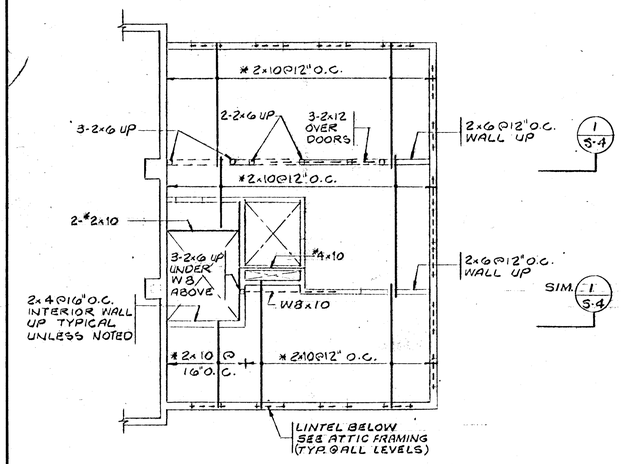

SECOND FLOOR FRAMING

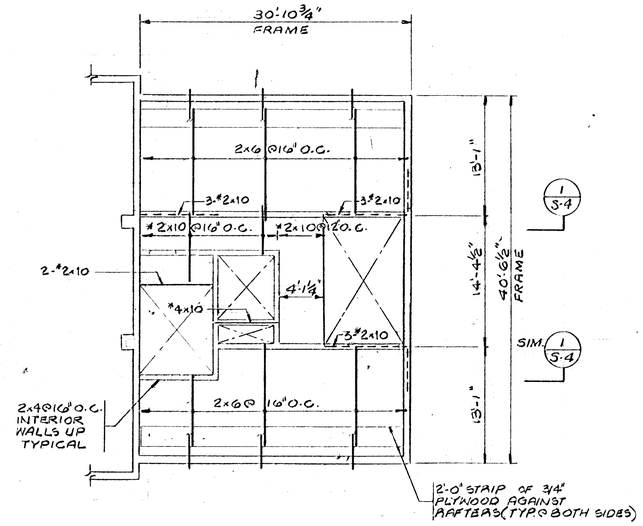

BALCONY FRAMING

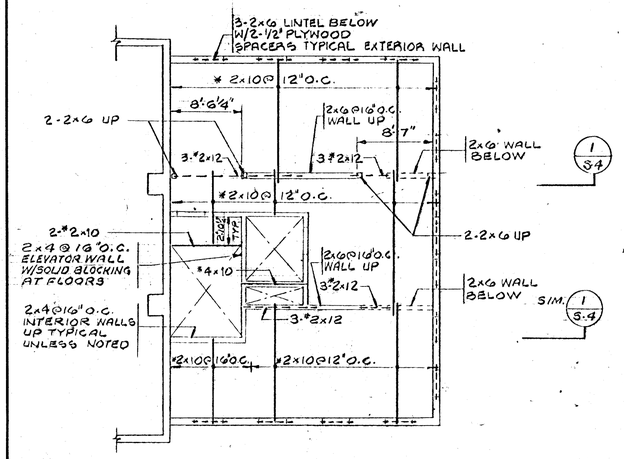

ATTIC FRAMING

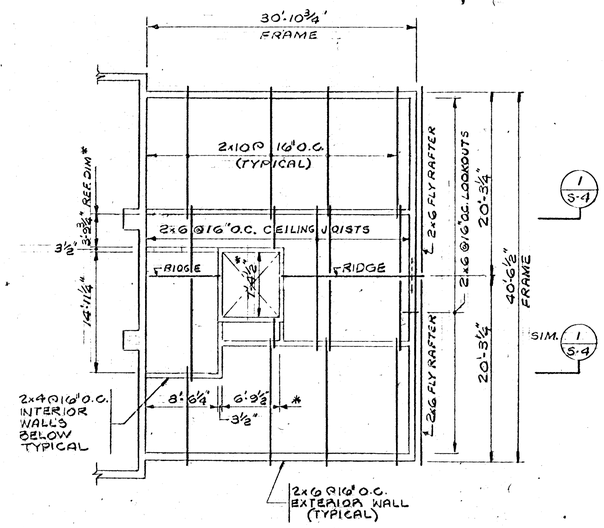

ROOF FRAMING

*NOTE:
DIMENSIONS SHOWN FOR STAIR & ELEVATOR SHAFT ARE TYPICAL FOR ALL FLOORS

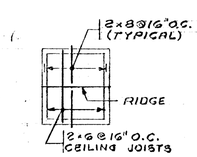

PENTHOUSE ROOF FRAMING

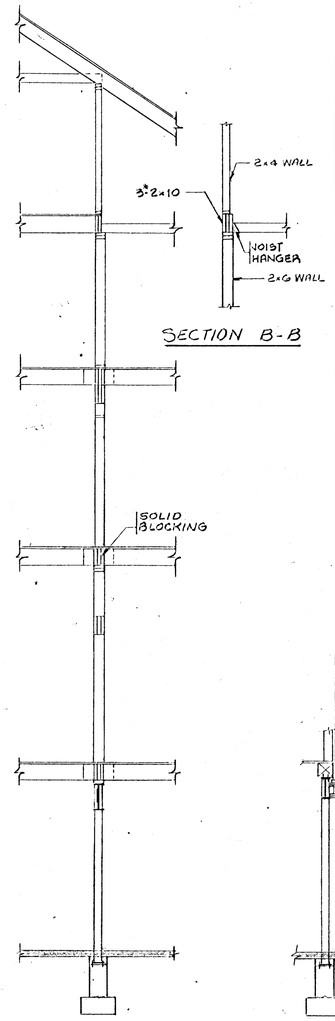

SECTION B-B

SECTION A-A
1/4" = 1'-0"

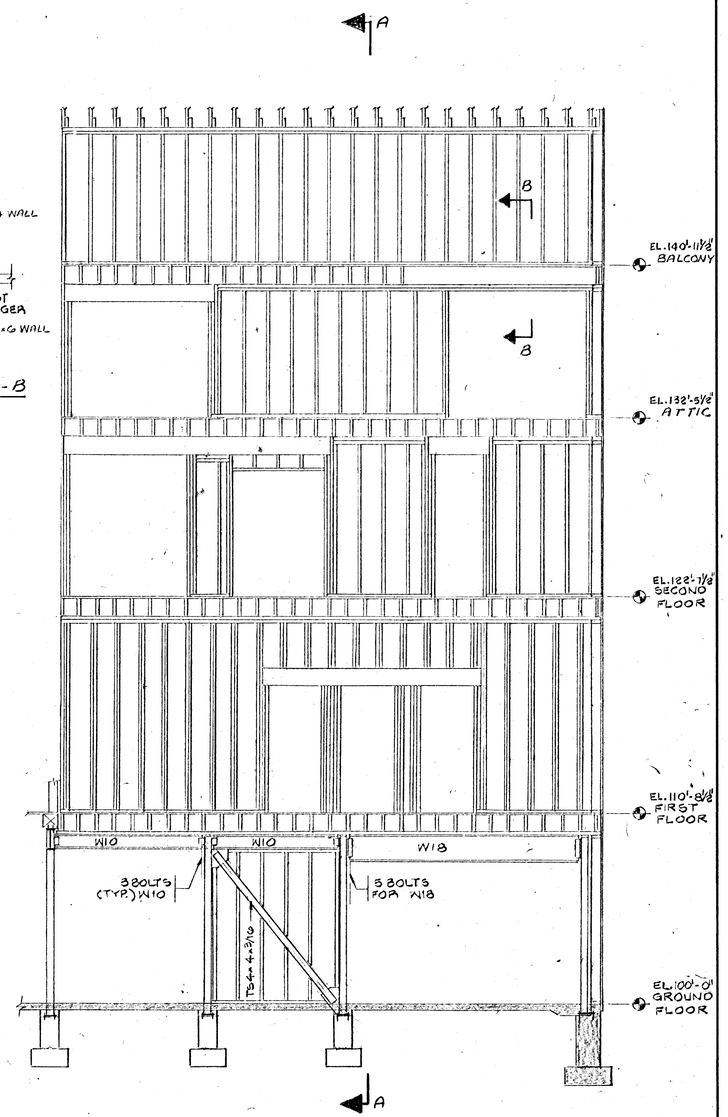

SECTION 1
1/4" = 1'-0"

Souza, True and Partners
Structural Engineers
653 Mt. Auburn St.
Watertown, Mass. 02172
926-6100

Additions and Renovations to
THE ACTON TOWN HALL
Acton, Massachusetts

title: UPPER FLOORS
ROBERT G. NEILEY ARCHITECTS
286 Congress Street, Boston MA 02210
drawn by | job 86021 | scale 1/4"=1'-0" | date 4-6-87
drawing: S-4