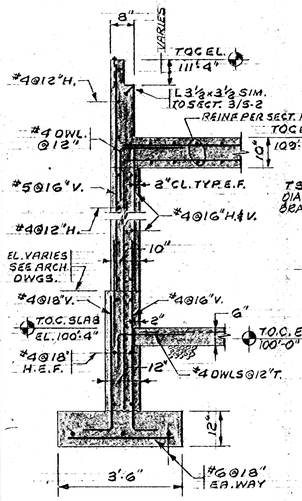

SECTION 7
½" = 1'-0"

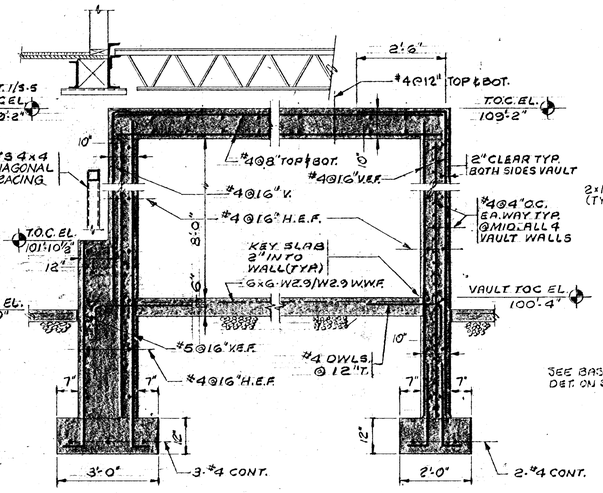

SECTION 1
½" = 1'-0"

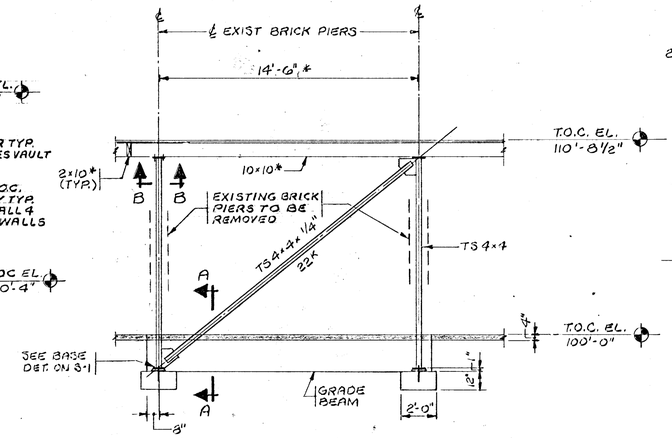

SECTION 2
¼" = 1'-0"

* INDICATES FIELD MEASUREMENTS TO BE VERIFIED BY G.C.

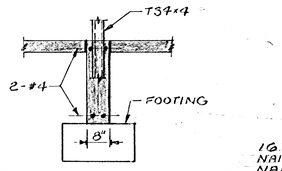

A-A
½" = 1'-0"

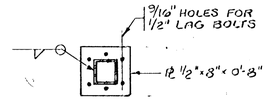

B-B
1" = 1'-0"

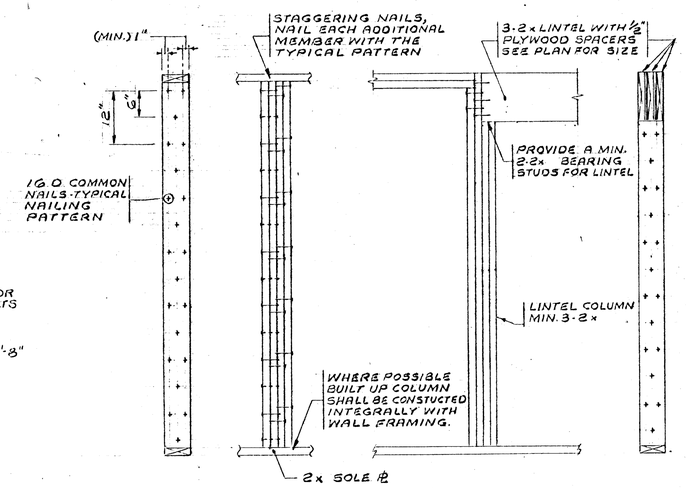

TYPICAL BUILT-UP COLUMN DETAIL

TYPICAL LINTEL DETAIL IN BEARING WALL

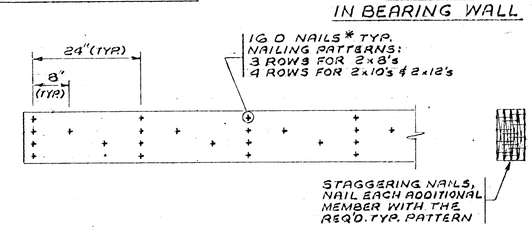

TYPICAL BUILT-UP BEAM DETAIL

*NOTE:
ALL NAILS FOR BUILT UP MEMBERS SHALL BE 16 D HARDENED ANNULARLY OR HELICALLY THREADED, ZINC OR CEMENT COATED FOR GREATER GRIPPING STRENGTH.

TYPICAL WOOD FRAMING

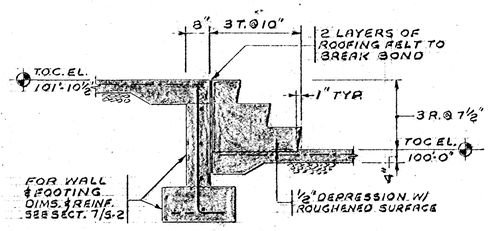

SECTION 3
½" = 1'-0"

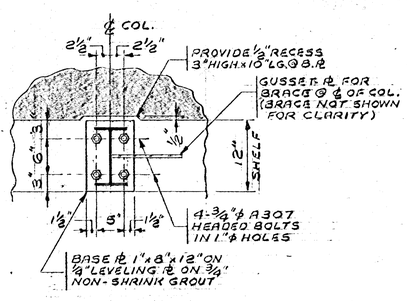

SECTION 4A
1" = 1'-0"

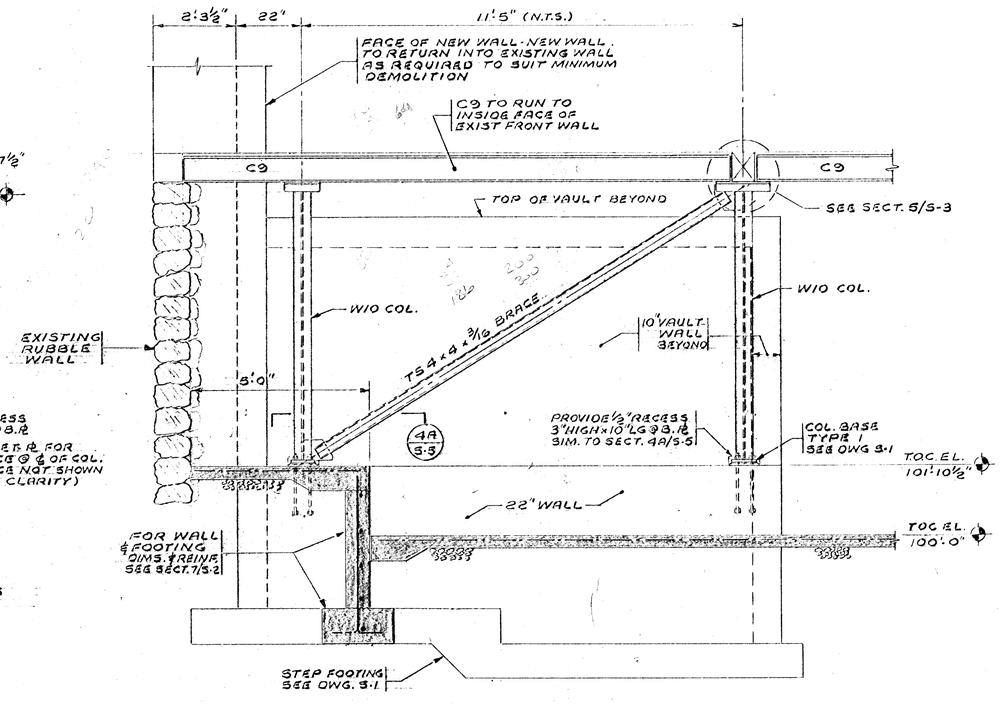

SECTION 4
1" = 1'-0"

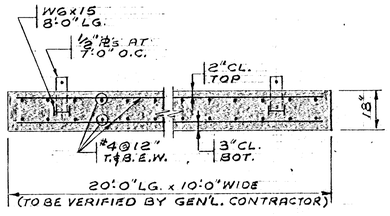

SECTION 5
N.T.S.
(UNDERGROUND FUEL OIL TANK PAD)

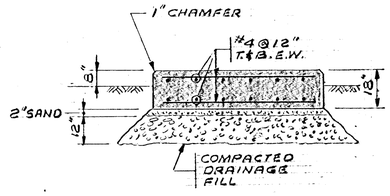

SECTION 6
N.T.S.
(TRANSFORMER PAD)
(CONDENSER PAD)

NOTE: SEE ELECTRICAL & HVAC DRAWINGS FOR SLAB CUTOUTS FOR UTILITY CONNECTIONS.

Souza, True and Partners
Structural Engineers
653 Mt. Auburn St.
Watertown, Mass. 02172
926-6100

COMMONWEALTH OF MASSACHUSETTS RICHARD W. SOUZA #5246 PROFESSIONAL ENGINEER

Additions and Renovations to
THE ACTON TOWN HALL
Acton, Massachusetts

title: STRUCTURAL DETAILS

ROBERT G. NEILEY ARCHITECTS
286 Congress Street, Boston MA 02210

drawn by | job 86021 | scale AS NOTED | date 4-6-87

drawing S-5