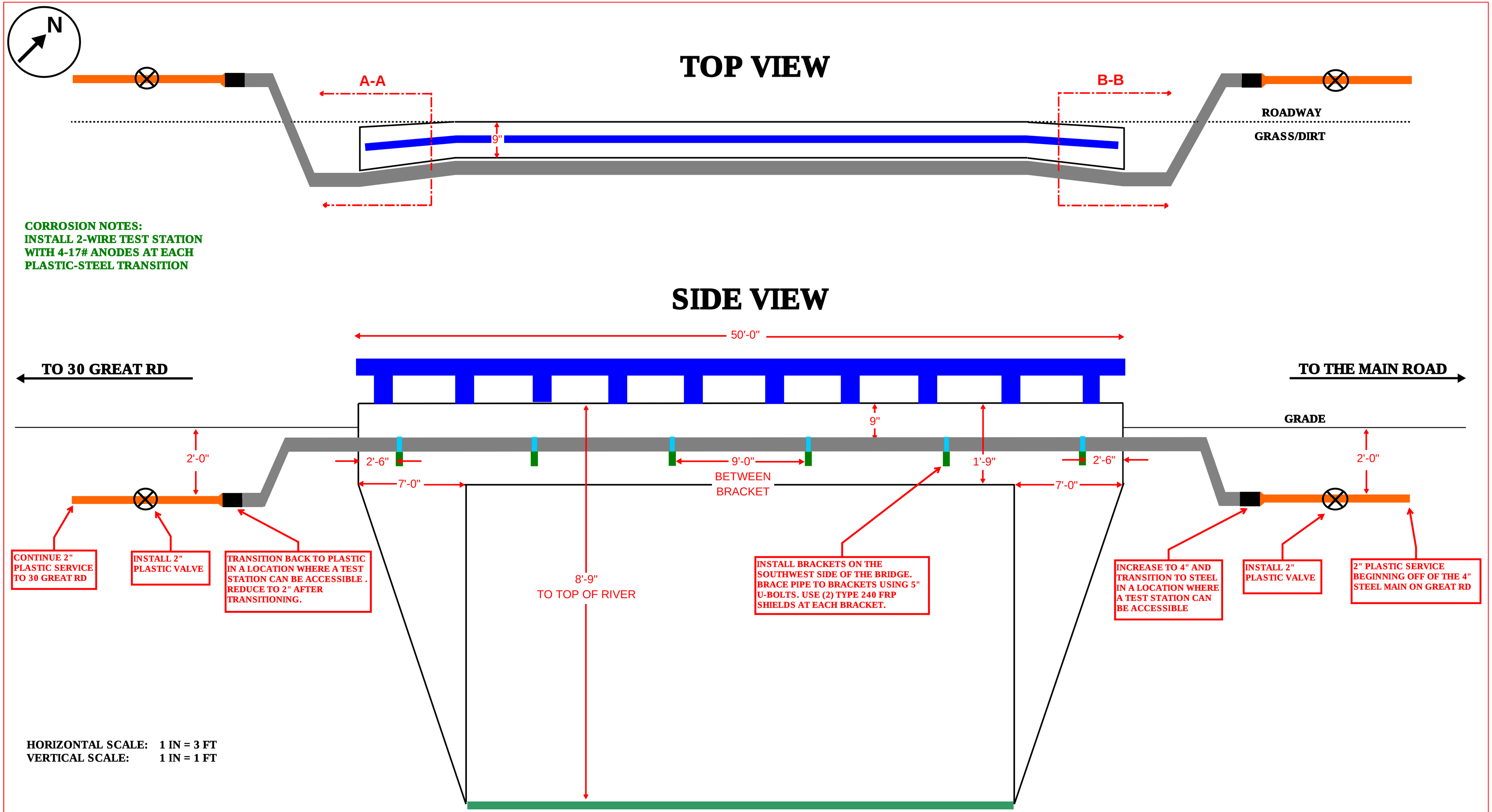

Install service on the side of a bridge over a river at 30 Great Rd in Acton. Install 2" PL on both sides of the culvert and transition to 4" CS to cross the culvert.

Engineer: Brad Marx (781-382-8906)

NO.	DESCRIPTION	DATE	DR.BY	CK.BY	APP.BY

REVISIONS

nationalgrid

40 SYLVAN RD.
WALTHAM, MA 02451

SERVICE FOR 30 GREAT RD
ACTON, MA

BRIDGE CROSSING DRAWING

SCALE:	DRAWN BY:	DATE:	CORROSION:	APPROVED BY:	CADD NO.:
	BRAD MARX	05/06/2014			

SHEET 1 OF 2

DRAWING NO.
ACT
943993

SECTION A-A

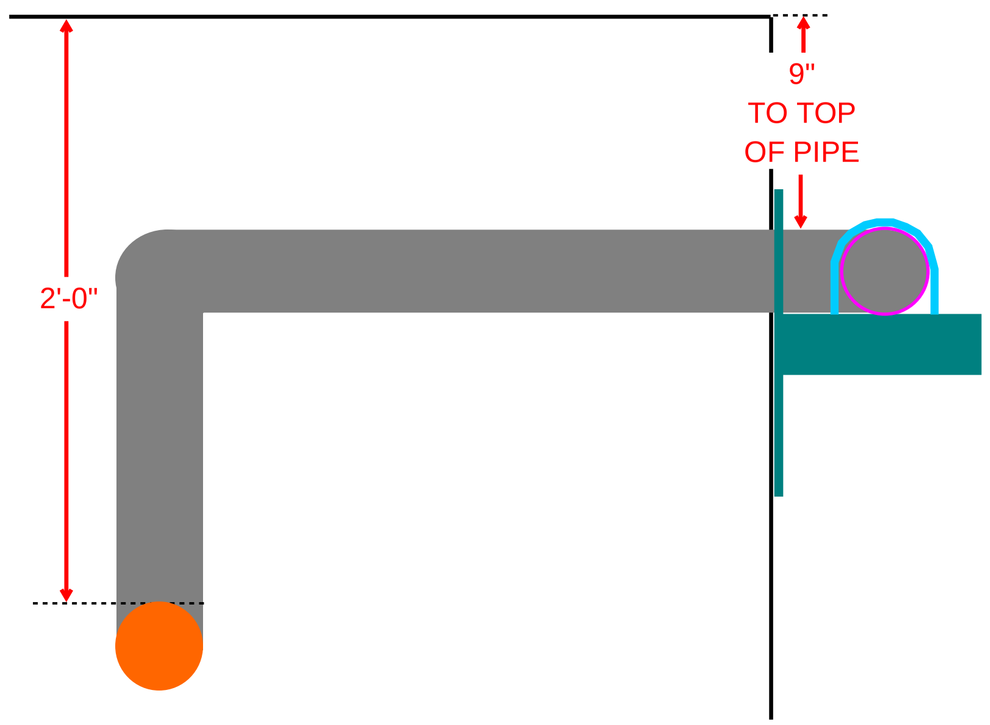

NOTE: NO DRAWINGS ON THIS PAGE ARE TO SCALE

U–BOLT PIPE RESTRAINT DETAIL

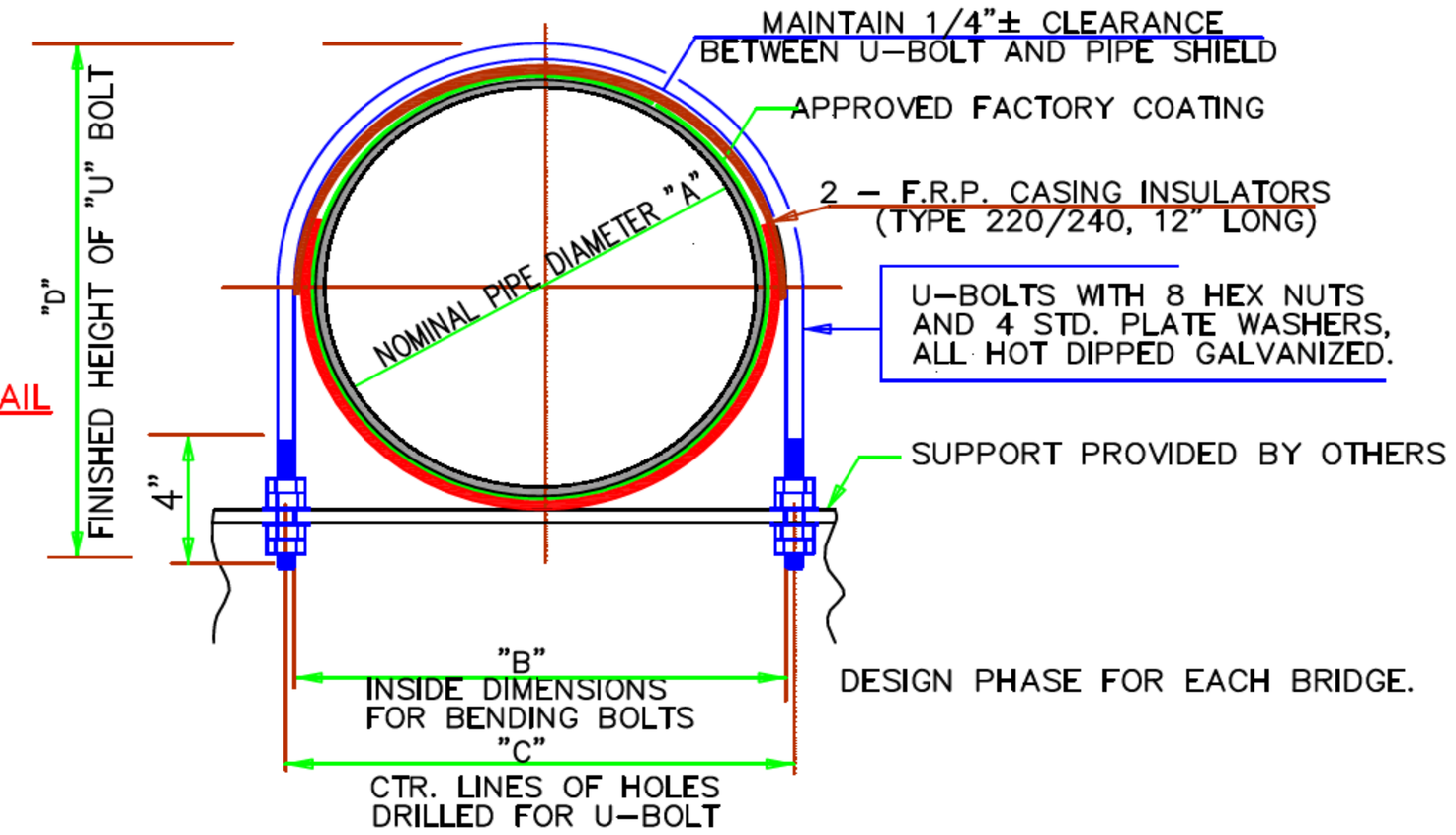

TABLE OF U–BOLT PIPE RESTRAINT DIMENSIONS FOR BRIDGE CROSSINGS					
NOMINAL PIPE "A"	INSIDE DIMENSIONS FOR U–BOLTS "B"	CENTERLINE DIMENSIONS FOR DRILLING HOLES "C"	FINISHED HEIGHT "D"	"U" BOLT ø	BOLT HOLE ø
4"	5 1/2"	6"	7 1/2"	1/2"	5/8"

SECTION B-B

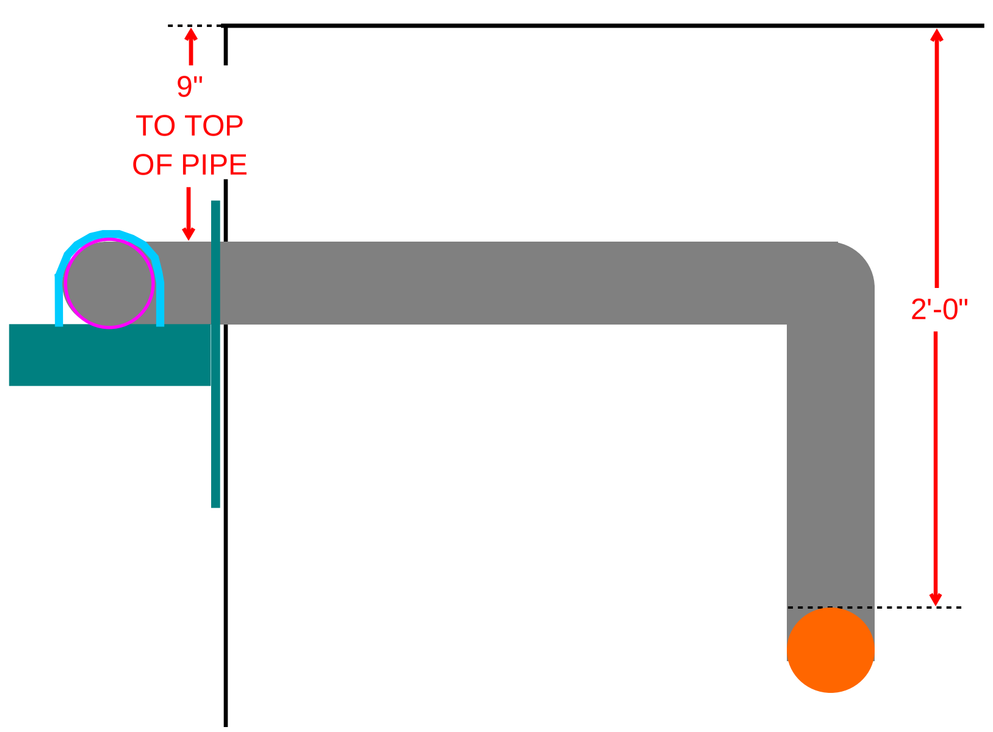

FASTEN BRACKETS TO BRIDGE USING 1/2" X 5-1/2" WEDGE ANCHORS. USE A7 ACRYLIC ADHESIVE FOR ADDED BOND STRENGTH.

BRACKET
Figure 83

This bracket is used on light duty applications. Dimension "B" can be changed upon request.

Material: Steel.

Finish: Plain, Electro-Galvanized, Hot-Dip Galvanized.

Ordering: Specify bracket size, figure number, and finish.

FIGURE 83 – BRACKET

SIZE	MAX. LOAD	A	B	MAX. ROD SIZE	WGT. EACH
1	610	8	4	½	2.7
1	2714	203	102	M12	1.2
2	610	8	6	½	3.2
2	2714	203	152	M12	1.5
3	610	8	9	½	4.4
3	2714	203	229	M12	2.0

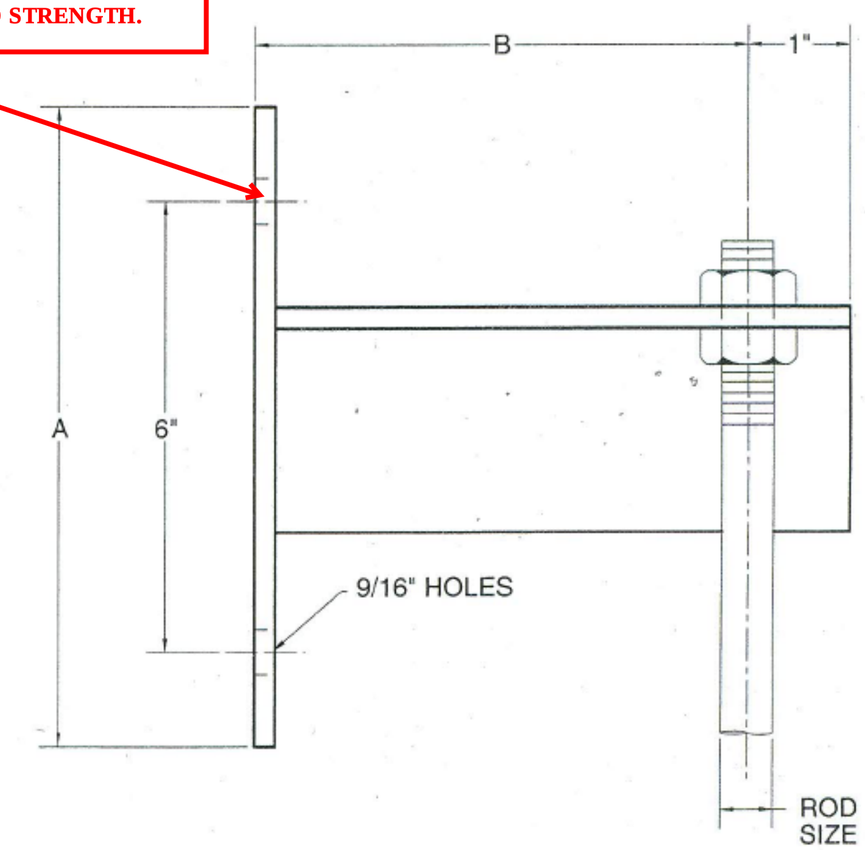

Install service on the side of a culvert over a river at 30 Great Rd in Acton. Install 2" PL on both sides of the culvert and transition to 4" CS to cross the culvert.

Engineer: Brad Marx (781-382-8906)

NO.	DESCRIPTION	DATE	DR.BY	CK.BY	APP.BY

REVISIONS

nationalgrid

40 SYLVAN RD.
WALTHAM, MA 02451

SERVICE FOR 30 GREAT RD
ACTON, MA

CULVERT CROSSING DRAWING

SCALE:	DRAWN BY:	DATE:	CORROSION:	APPROVED BY:	CADD NO.:
	BRAD MARX	05/06/2014			

SHEET 2 OF 2

DRAWING NO.
ACT 943993