Site Location Map

Source: USGS – Maynard, MA

Not To Scale

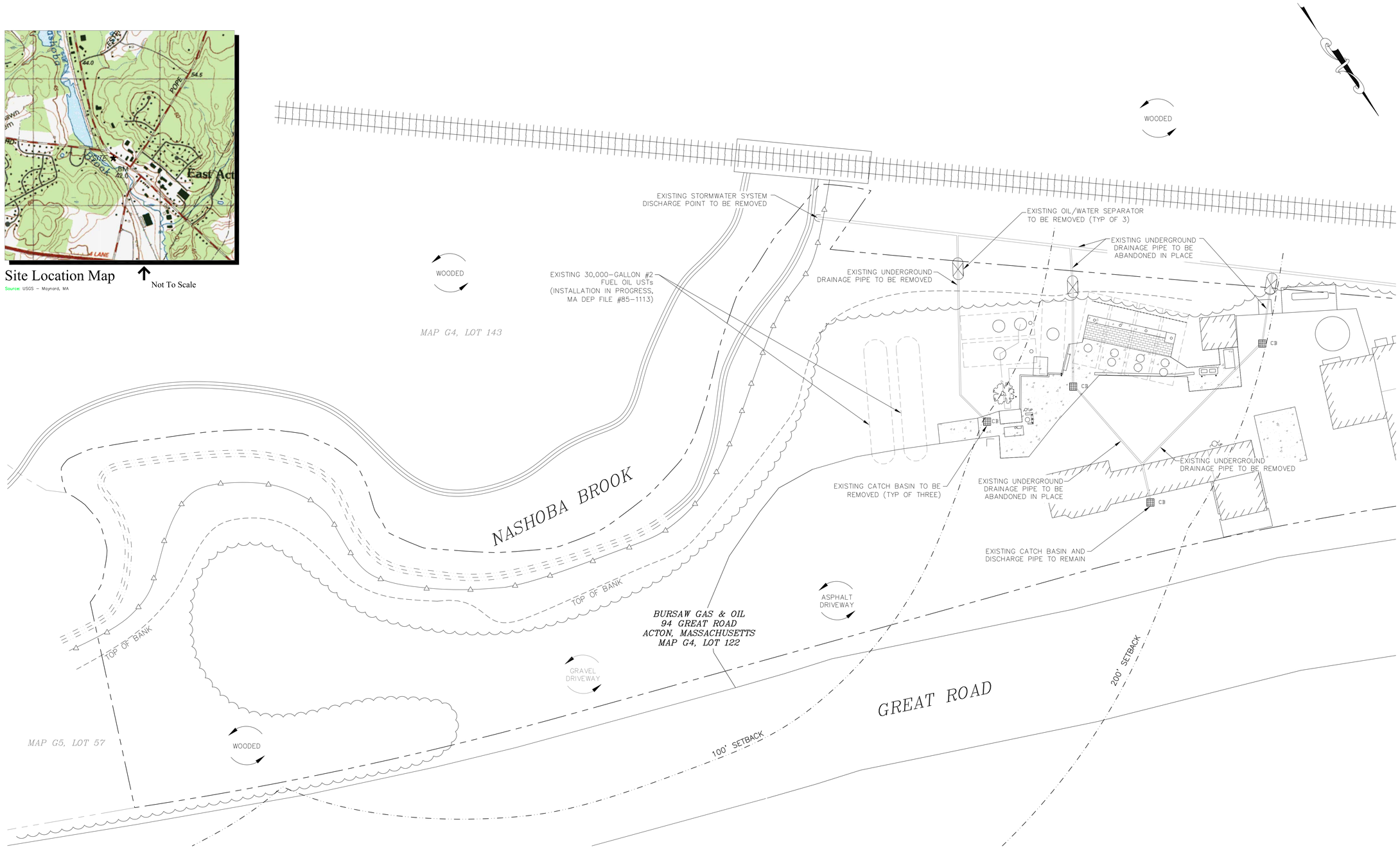

LEGEND

TRAIN TRACKS	TREE
PROPERTY LINE	UNDERGROUND STORAGE TANK — UST
WETLAND BOUNDARY	CATCH BASIN — CB
	OIL/WATER SEPARATOR

EXISTING CONDITIONS PLAN

PLAN GRAPHIC SCALE

10 0 10 20

SCALE IN FEET

Wilcox & Barton INC.

ENVIRONMENTAL AND ENGINEERING SERVICES

57 HOIT ROAD
CONCORD, NEW HAMPSHIRE

VERMONT MASSACHUSETTS RHODE ISLAND

GENERAL NOTES

1. THE PURPOSE OF THIS PLAN IS TO PROVIDE DESIGN DETAIL AND A GENERAL LAYOUT FOR THE UST INSTALLATION AND STORMWATER SYSTEM UPGRADES AT THE 94 GREAT ROAD SITE.
2. THE DESIGN INCLUDES:
   - 2.1. INSTALLATION OF ONE NEW PROPANE UST.
   - 2.2. INSTALLATION OF NEW PROPANE LOADING/UNLOADING PIPING STAND.
   - 2.3. INSTALLATION OF NEW SECURITY FENCE AND LIGHTING.
   - 2.4. INSTALLATION OF VEHICLE CRASH BARRIERS..
   - 2.5. REMOVAL OF THREE EXISTING CATCH BASINS, ASSOCIATED DRAINAGE PIPING, AND THREE OIL/WATER SEPARATORS.
   - 2.6. INSTALLATION OF THREE NEW CATCH BASINS AND ONE DISTRIBUTION MANHOLE.
   - 2.7. INSTALLATION OF ONE NEW OIL/WATER SEPARATOR.
3. RESTORATION OF SURFACES
   - 3.1. AREAS IN THE VICINITY OF THE NEW UST AND OIL/WATER SEPARATOR ARE TO BE RESTORED WITH GRAVEL AND/OR GRASS. BOTH SHALL BE GRADED TO DRAIN WITHOUT PONDING.
   - 3.2. IF APPLICABLE, LANDSCAPED OR GRASSED AREAS WILL BE REPAIRED IN A MANNER CONSISTENT WITH THE EXISTING VEGETATION IN SPECIES AND SIZE.
   - 3.3. AREAS IN THE VICINITY OF THE NEW CATCH BASINS AND MANHOLE ARE TO BE RESTORED WITH CONCRETE OR ASPHALT PAVEMENT TO MATCH SURROUNDING CONDITIONS..
4. THE CONTRACTOR IS RESPONSIBLE FOR THE FOLLOWING:
   - 4.1. CONFORMING TO ALL STATE AND CITY/TOWN REGULATIONS AND CODES.
   - 4.2. OBTAINING ALL NECESSARY UST RELATED PERMITS AND APPROVALS (I.E. FIRE DEPARTMENT, ELECTRICAL, ETC.).
   - 4.3. CONTACTING DIG-SAFE AND PROTECTING EXISTING UTILITIES.
5. BASE PLAN WAS COMPLIED FROM AVAILABLE INFORMATION.
6. WETLANDS DELINEATION SURVEY PERFORMED ON AUGUST 30, 2012, BY SANFORD ENVIRONMENTAL SERVICES, INC.

REV	DATE	DESCRIPTION	BY	CK

ALL DOCUMENTS PREPARED BY WILCOX & BARTON, INC. ARE INSTRUMENTS OF SERVICE IN RESPECT OF THE PROJECT. THEY ARE NOT INTENDED OR REPRESENTED TO BE SUITABLE FOR REUSE BY OWNER OR OTHERS ON EXTENSIONS OF THE PROJECT OR ON ANY OTHER PROJECT. ANY REUSE BY WILCOX & BARTON, INC. FOR THE SPECIFIC PURPOSE INTENDED WILL BE AT OWNER'S SOLE RISK AND WITHOUT LIABILITY OR LEGAL EXPOSURE TO WILCOX & BARTON, INC. OWNER SHALL INDEMNIFY AND HOLD HARMLESS WILCOX & BARTON, INC. FROM ALL CLAIMS, DAMAGES, LOSSES AND EXPENSES ARISING OUT OF OR RESULTING THEREFROM.

Client
Bursaw Gas & Oil
94 Great Road
Acton, Massachusetts

Owner
Bursaw Gas & Oil
94 Great Road
Acton, Massachusetts

Issued For
Permitting

Project Title
Proposed Propane UST Installation and Stormwater System Upgrades
94 Great Road
Acton, Massachusetts

Drawing Title
Existing Conditions Plan

Scale	File
As Noted	Acton Design Plan

Drafter	Checked By	PM	Proj. No.
JDD	RWB	RWB	BURS0001

Original Date	Revised Date
10/29/12	8/29/14

Released For Specified Purpose

COMMONWEALTH OF MASSACHUSETTS
ROBERT W. ROOKS
CIVIL
No. 51258
REGISTERED PROFESSIONAL ENGINEER

9/2/14

This Plan Has Been Prepared By Me Or Under My Supervision.

Drawing Number
C-1

Sheet 1 Of 2

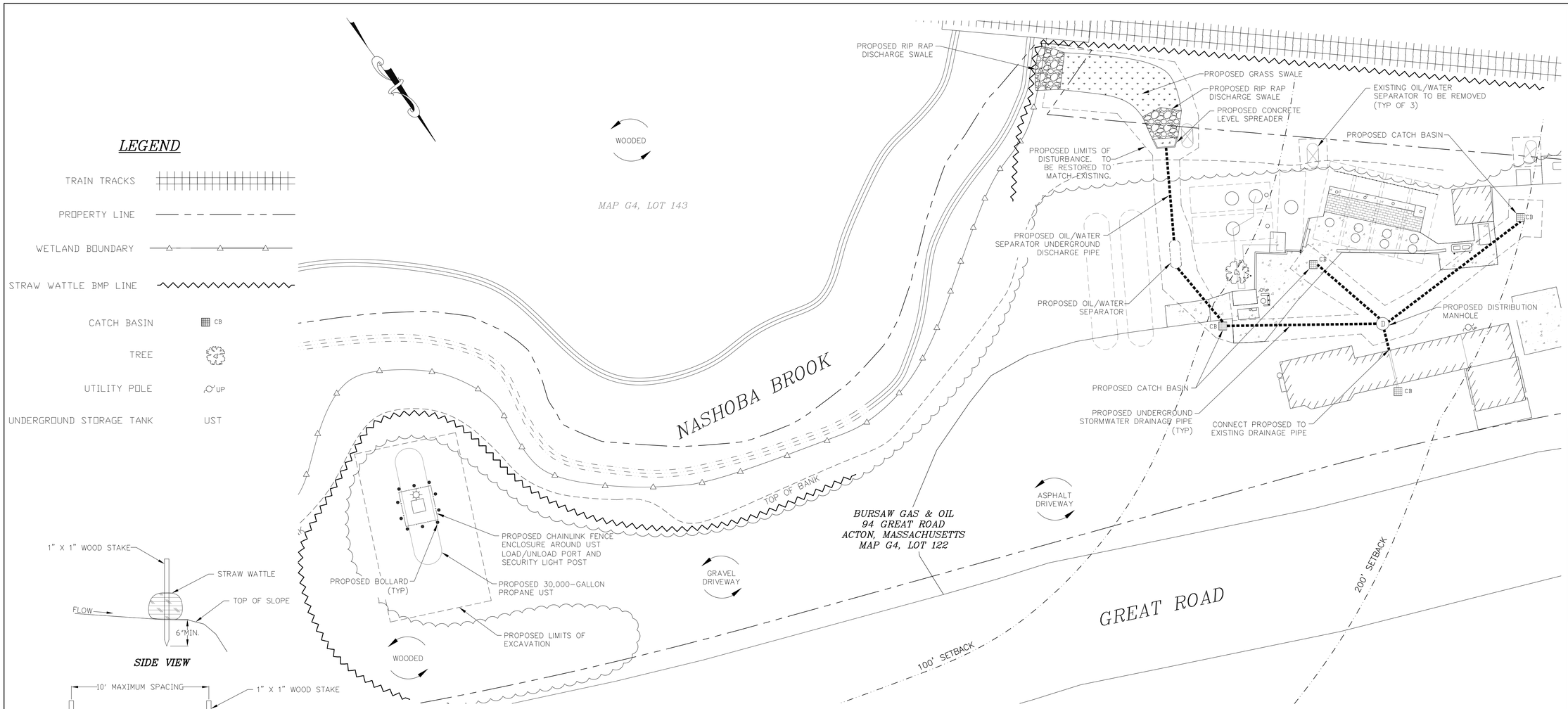

PROPOSED PLAN

PLAN GRAPHIC SCALE

10 0 10 20

SCALE IN FEET

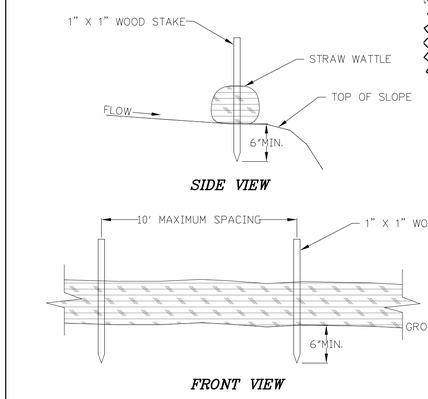

NOTES:
1. Straw wattle to be 8" diameter minimum.

Straw Wattle BMP

Not To Scale — Source: Wilcox & Barton, Inc. — 8/2014

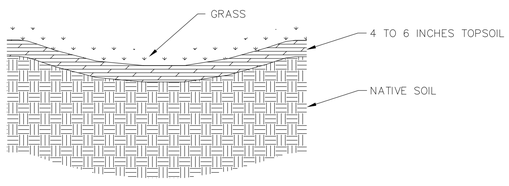

NOTES:
1. Grass should be reed canary, KY-31 tall fescue, or equivalent.
2. All disturbed areas and slopes to be restored using similar planting mix.
3. Grass should be routinely maintained during the growing season at a height of 4 to 6 inches.
4. The growth of woody plants within the grass swale is prohibited.

Grass Swale Detail

Not To Scale — Source: Wilcox & Barton, Inc. — 8/2014

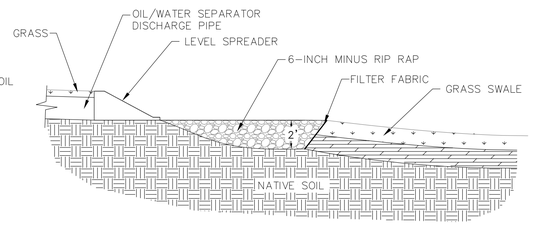

NOTES:
1. Pad shall be constructed with 6-inch minus rip rap.
2. Filter fabric shall be installed between native soil and rip rap interface.
3. Rip rap shall be cleaned or replaced if visible sediment or ponding is observed.

Level Spreader/Rip Rap Pad Detail

Not To Scale — Source: Wilcox & Barton, Inc. — 8/2014

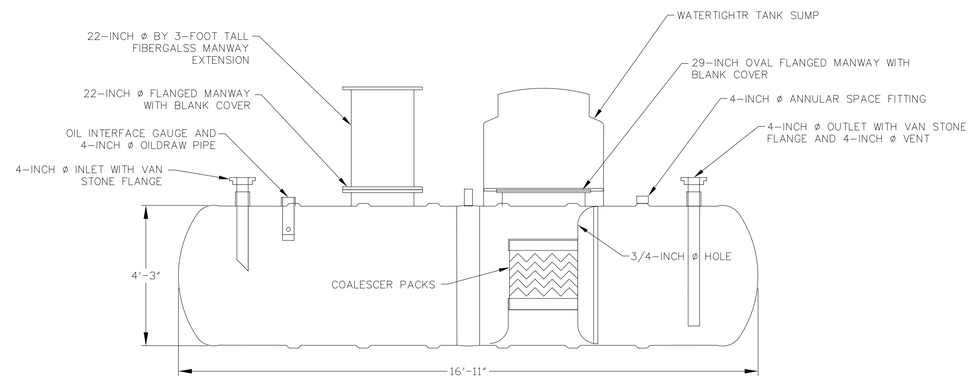

PROPOSED 1,500-GALLON OIL/WATER SEPARATOR

NOT TO SCALE

Wilcox & Barton INC.
ENVIRONMENTAL AND ENGINEERING SERVICES
57 HOIT ROAD
CONCORD, NEW HAMPSHIRE
VERMONT MASSACHUSETTS RHODE ISLAND

REV	DATE	DESCRIPTION	BY	CK

ALL DOCUMENTS PREPARED BY WILCOX & BARTON, INC. ARE INSTRUMENTS OF SERVICE IN RESPECT OF THE PROJECT. THEY ARE NOT INTENDED OR REPRESENTED TO BE SUITABLE FOR REUSE BY OWNER OR OTHERS ON EXTENSIONS OF THE PROJECT OR ON ANY OTHER PROJECT. ANY REUSE BY WILCOX & BARTON, INC. FOR THE SPECIFIC PURPOSE INTENDED WILL BE AT OWNER'S SOLE RISK AND WITHOUT LIABILITY OR LEGAL EXPOSURE TO WILCOX & BARTON, INC. OWNER SHALL INDEMNIFY AND HOLD HARMLESS WILCOX & BARTON, INC. FROM ALL CLAIMS, DAMAGES, LOSSES AND EXPENSES ARISING OUT OF OR RESULTING THEREFROM.

Client
Bursaw Gas & Oil
94 Great Road
Acton, Massachusetts

Owner
Bursaw Gas & Oil
94 Great Road
Acton, Massachusetts

Issued For
Permitting

Project Title
Proposed Propane UST Installation and Stormwater System Upgrades
94 Great Road
Acton, Massachusetts

Drawing Title
Proposed Plan

Scale	File
As Noted	Acton Design Plan

Drafter	Checked By	PM	Proj. No.
JDD	RWB	RWB	BURS0001

Original Date	Revised Date
10/29/12	8/29/14

Released For Specified Purpose

COMMONWEALTH OF MASSACHUSETTS
ROBERT W. ROOKS
CIVIL
No. 51258
REGISTERED PROFESSIONAL ENGINEER
9/2/14

Drawing Number
C-2

Sheet 2 Of 2

This Plan Has Been Prepared By Me Or Under My Supervision.