MASSACHUSETTS DOER COMMUNITY CLEAN ENERGY RESILIENCY INITIATIVE
APPENDICES: TOWN OF ACTON-BOXBOROUGH REGIONAL SCHOOL DISTRICT (ABRSD)

Attachments:

- Appendix A: Modeling Assumptions
- Appendix B: Supporting Documentation
- Appendix C: Detailed System Reports

THIS PAGE INTENTIONALLY LEFT BLANK

Appendix A: Modeling Assumptions

THIS PAGE INTENTIONALLY LEFT BLANK

Massachusetts DOER Community Clean Energy Resiliency Initiative
Tables of Assumptions by Technology

Natural Gas Combined Heat and Power

Table 1. Combined Heat and Power

Parameter	Value	Units	Sources/Notes
Capital cost	$3,500	$/kW	NREL
Variable O&M cost	$0.06	$/kWh	NREL
O&M cost	$0.0225	$/kW/hour of operation	Assume 75% CF
APS rebate	($0.03)	$/kWh	Cadmus APS data
Overhaul frequency	20,000	hours of operation	Engineering assumption
Replacement cost	$583.33	$/kW	Assume 1/6 of capital cost
Fixed cost	$91	$/kW-yr	Engineering assumption
Fuel cost	Rate	$/m^3	
Peak electrical efficiency	33%	--	Engineering assumption
Minimum output as percentage of nameplate	50%	--	Engineering assumption
Net peak fuel efficiency (thermal and electrical)	60%	--	Engineering assumption

Table 2. Small-Scale (Less than 300 kW) Combined Heat and Power

Parameter	Value	Units	Sources/Notes
Capital cost	$4,000	$/kW	Vendor information
Availability	96%	--	Vendor information
Capital cost – hydronic loop	$50,000	$	Vendor information
Capital cost – islanding switchgear	$50,000	$	Vendor information
Utility rebate	$56,000	--	Vendor information

Biomass Combined Heat and Power

Table 3. Biomass Combined Heat and Power

Parameter	Value	Units	Sources/Notes
Capital cost	$6,067	$/kW	NREL
Fixed cost	$91	$/kW/year	NREL
Variable O&M cost	$0.06	$/kWh	NREL
APS rebate	($0.03)	$/kWh	Cadmus APS data
Overhaul frequency	20,000	hours of operation	Engineering assumption
Replacement cost	$1,011	$/kW	Assume 1/6 of capital cost
O&M cost	$0.05	$/hour of operation	Assume 75% CF
Peak electrical efficiency	24%	--	Engineering assumption
Minimum output as % of nameplate	50%	--	Engineering assumption

Table 4. Biomass Combined Heat and Power Fuel (Wood Pellets)

Parameter	Value	Units	Sources/Notes
Density	200	kg/m^3	Engineering assumption
Energy content	19	MJ/kg	Engineering assumption

Natural Gas Reciprocating Engine

Table 5. Natural Gas Reciprocating Engine Technology

Parameter	Value	Units	Sources/Notes
Capital cost	$1,000	$/kW	Vendor info
Overhaul frequency	25,000	hours of operation	Vendor info
Replacement cost	$300	$/kW	Vendor info
O&M cost	$0.01	$/kW/hour of operation	Vendor info
Minimum power output	50%	of rated power output	Vendor info
Efficiency at 100% output	30%	electricity out / fuel energy in	Vendor info
Efficiency at 50% output	25%	electricity out / fuel energy in	Vendor info

Solar Photovoltaics

Table 6. Solar Photovoltaics (Direct Ownership)

Parameter	Value	Units	Sources/Notes
Installed cost	$4.22	$/kW	Cadmus data
O&M cost	$20	$/kW/year	Cadmus data
Lifetime cost	20	years	Typical PV guarantee
Replacement cost	$4.22	$/kW	Estimated
Capacity factor	14.39%		MA DOER

Table 7. Solar Photovoltaic (Power Purchase Agreement)

Parameter	Value	Units	Sources/Notes
PPA cost	$0.10	$/kWh	Cadmus assumption (coastal and central MA)
Annual production	1,261	kWh/kW/year	Calculated based on capacity factor
Cost/year	$126.1	$/kW/year	Estimated
Capacity factor	14.39%		MA DOER

* Net metering, calculated annually, assuming net-metered energy cannot exceed grid purchases by more than 1/3.

Battery Storage

Table 8. Battery Storage

Parameter	Value	Units	Sources/Notes
Capital cost	$800	$/kWh	SANDIA, 1 kWh lead acid battery and management system
Replacement cost	$500	$/kWh	HOMER assumption
O&M cost	$10	$/kWh/year	HOMER assumption

Fuel Cells

Table 9. Fuel Cells

Parameter	Value	Units	Sources/Notes
Capital cost	$10,000	$/kW	NREL
Overhaul frequency	50,000	hours of operation	Estimated
Replacement cost	$10,000	$/kW	Assumption
O&M cost	$0.01	$/kW/hour of operation	Estimated
Minimum power output	75%	of rated power output	Engineering assumption
Efficiency at 100% output	60%	electricity out / fuel energy in	CCERI minimum eligibility
Efficiency at 50% output	60%	electricity out / fuel energy in	CCERI minimum eligibility

Fuels

Table 10. Fuel

Parameter	Value	Units	Sources/Notes
Diesel	$0.80	$/L	Vendor information
Gasoline	$1.00	$/L	Assumption
Propane	Rate	$/L	Community
Heating oil	$0.80	$/L	Assumed; heating oil = non-road diesel
Natural gas	$0.50	$/m^3	Assumed, if no other data provided
Natural gas	$1.4835	$/therm	Calculated
Wood pellet energy content	5	MWh/tonne	Calculated
Wood pellet energy content	18	MJ/kg	Biomass Energy Center
Wood pellet cost	$200	$/tonne	MA DOER
Wood pellet cost	$0.011	$/MJ	Calculated
Wood pellet cost	$1.172	$/therm	Calculated

Emissions

Table 11. Emissions

Parameter	Value	Units	Sources/Notes
NPCC New England (NEWE) GHG Intensity	420	gCO2e/kWh	Union of Concerned Scientists
Biomass GHG intensity	0	gCO2e/kWh	Assumption
PV GHG intensity	0	gCO2e/kWh	Assumption
Battery GHG intensity	0	gCO2e/kWh	Assumption

CADMUS

Battery Storage for Energy Resiliency

There are many factors to consider when selecting a battery storage technology for a backup power system, including initial capital costs, maintenance requirements, energy and power needs, useful lifetime, charging requirements, and siting and environmental considerations. There are a variety of battery chemistries available with unique cost and performance attributes – common types include:

- Flooded lead acid batteries,
- Sealed lead acid batteries,
- Lithium-ion batteries and,
- Other types. Including nickel, hybrid, and flow batteries.

Table 1 provides a brief overview of select battery technologies, including approximate cost (inclusive of battery management system and balance of plant equipment), as well as relative rankings of energy density, maintenance, cycle life, depth of discharge, and average lifetime in standby applications.

Table 1. Baseline and Clean Energy Generation Scenario Costs and Emissions

Battery Type	Cost/kWh	Maintenance Requirements	Energy Density	Cycle Life/Depth of Discharge	Average Lifetime
Flooded lead-acid	$200-$400	High	Moderate	Moderate	Moderate
Sealed lead-acid	$400 - $800	Low	Low	Low to Moderate	Low
Lithium Ion	$1,000- $1,600	Low	High	Moderate to High	High

Flooded Lead Acid (FLA)

Flooded lead acid (FLA) batteries are one of the oldest technologies available that is suitable for backup storage in a resiliency application. FLA are typically the lowest cost solution, though have shorter lifetimes, higher maintenance requirements and safety concerns versus other technologies. The electrolyte in the FLA battery is a liquid that needs to be equalized periodically to ensure it is well mixed, which in turn helps extend battery lifetime. During equalization the battery is subjected to a high charge current and can generate hydrogen gas, an explosive gas that requires adequate ventilation. Maintenance requires measuring the specific gravity of cells and periodically adding distilled water to replace liquid lost to evaporation during charging.

Benefits of FLA Batteries

- Low initial cost
- Widely available and used in renewable energy and backup power applications

Drawbacks of FLA Batteries

- Require equalization charging and monitoring of electrolyte
- Sensitive to depth of discharge and temperature
- Capacity is reduced at high discharge rates

Figure 1. 350 kWh Flooded Lead Acid Battery Bank

- Require sufficient ventilation/airflow to prevent buildup of hydrogen gas

Sealed Lead Acid Batteries (SLA)

Sealed lead acid (SLA), or valve regulated lead acid (VRLA), batteries offer a compromise between cost and maintenance. SLA batteries generate very little hydrogen gas compared to FLA batteries and thus require little maintenance, making them suitable for remote installations. Typically constructed with lead-calcium plates, the two most common types of SLA batteries are absorbed glass mat (AGM) and gelled electrolyte (GEL). Generally, GEL batteries recover quicker from deep discharge, though have lower charging and discharging rates as compared with AGM batteries..

Benefits of SLA Batteries

- Minimal maintenance requirements
- Widely available and used in renewable energy and backup power applications

Drawbacks of SLA Batteries

- Sensitive to depth of discharge and temperature
- Low energy density (will require more space to store batteries than other technologies)
- Capacity is reduced at high discharge rates

Lithium-ion Batteries

Lithium-ion (Li-ion) batteries are a relatively new technology which has benefited from the popularity of hybrid automobiles and research in the area of lightweight, high-density energy storage. While the cost of Li-ion batteries has come down in recent years, they remain two to three times more expensive than lead-acid batteries. Li-ion batteries can generally tolerate deeper and more frequent discharge cycles than lead acid batteries and are less impacted by variations in temperature or discharge rate. These types of batteries, though initially more expensive, may be more cost-effective over time in cold or hot weather applications where frequent charging and discharging is expected. For occasional use in climate-controlled areas, Li-ion may not be as cost-effective as lead acid type batteries.

Benefits of Li-Ion Batteries

- Require less space for same energy storage
- Minimal effects of temperature and discharge rate on capacity
- Deep discharges have minimal effect on cycle life compared to lead acid technologies

Drawbacks of Li-Ion Batteries

- Expensive compared to other technologies
- Relatively new for small-mid scale renewable energy and backup power applications

Other Battery Technologies

The battery industry is evolving quickly and there are many other types of batteries entering the marketplace. Compared with the technologies mentioned here, however, some of these new technologies are not yet widely used in backup power applications.

Appendix B: Supporting Documents

THIS PAGE INTENTIONALLY LEFT BLANK

CADMUS

MEMORANDUM

To: Kate Crosby, Energy Manager, Acton-Boxborough Regional School District

From: Danielle Poulin and Charlie McClelland, Cadmus

Subject: Request for Information – CCERI Technical Assistance Application

Date: August 26, 2014

Please provide written responses to questions outlined in the Request for Information below by Tuesday, September 9, 2014. Submission of responses prior to this date is encouraged.

Introduction

The Cadmus team will be developing a model for the proposed facilities identified by the Acton-Boxborough Regional School District in the Community Clean Energy Resiliency Initiative (CCERI) Technical Assistance application. In order to provide the most robust analysis and recommendations for the potential project, the Cadmus team requires additional documents and information, listed below.

Request for Information

1. A utility bill for June 2013 was not provided. Please provide this bill. If unavailable, please provide a narrative describing typical usage during the month of June.
2. If any months of energy usage in the CY2013 were atypical of normal usage, please explain.
3. The School District does not currently have a generator at RJ Grey Junior High School. Please confirm.
4. In addition to energy storage using the existing solar arrays at the High School and RJ Grey Junior High School, the School District is also interested in exploring CHP, solar thermal, and district heating. Please confirm.
5. Does the School District have biomass resources that could be used in a biomass district heating application? If no, would the School District be interested in acquiring these resources (e.g., wood pellets, wood chips).

Please feel free to contact us with any questions or concerns.

Kind Regards,

Danielle Poulin
The Cadmus Group, Inc.
Danielle.Poulin@cadmusgroup.com
617-673-7169

THIS PAGE INTENTIONALLY LEFT BLANK

Appendix C: Detailed System Reports

THIS PAGE INTENTIONALLY LEFT BLANK

ABRSD Regional High School and RJ Grey Junior High School

1 SUMMARY

Our modeling first determined the impact of a particular system during typical operation. These results are presented in the form of a system report. We then modeled each of these systems expected performance and cost during an emergency event. The emergency event analyzes how the system will perform during survive a 72 hour grid outage.

Baseline schematic: • Existing grid + PV systems ***NOTE: EXISTING 240kW Natural Gas Genset not included in this architecture because it can only power limited loads***	
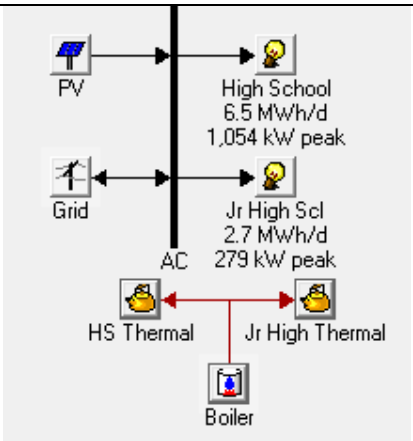	

Baseline+ Islanding Switchgear for both Existing Genset and PV + Storage • Existing grid + PV systems • Islanding Switchgear for both Existing Genset and PV + Storage	Baseline + new Natural Gas Combined Heat and Power (CHP) Unit with Islanding Capability • Existing grid + PV systems • CHP Unit with Islanding capability
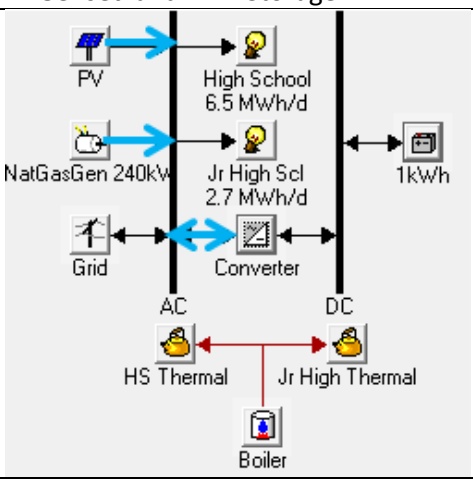	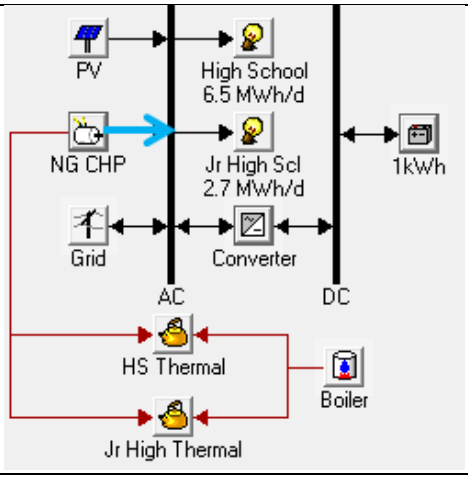

2 KEY OBSERVATIONS:

1. Baseline system (Existing grid + PV systems)
    a. The system currently is incapable of meeting the load during a grid-outage event. The high school owns a 240 kW genset that can meet a subset of critical loads (emergency lighting, MDF closet (servers and Mitsubishi unit - not the Liebert), and Building Management Systems and circulator pumps)
2. Baseline+ Islanding Switchgear for both Existing Genset and PV + Storage for 1 hour of backup power, considering annual average load
    a. 1300 kWh of lead acid batteries are expected to cost approximately ~$1.04 million.
3. Baseline + new Natural Gas Combined Heat and Power (CHP) Unit with Islanding capability
    a. Interconnecting main steam loops for the high school and junior high would improve the utilization factor for CHP and allow for larger CHP generator sizing. Thermal loads from the high school and junior high have been aggregated.
        i. Figure above shows the sensitivity of installing CHP to the price of natural gas. If the cost of natural gas for CHP is less than about $0.33/m3 ($1.00/therm), CHP from NG is likely to save ABRSD money with a $400,000 capital outlay to install the 100 kW system. If the price of NG is higher, a CHP system is expected to increase operating costs. The typical cost of NG is about $0.50/m^3 (~$1.50/therm).
        ii. 2.97 m3/therm: $0.20/m3 = ~$0.60/therm; $0.50/m3 = ~$1.50/therm
    b. To minimize the impact on annual operating costs, the modeling team considered a small CHP system, relative to total thermal loads.

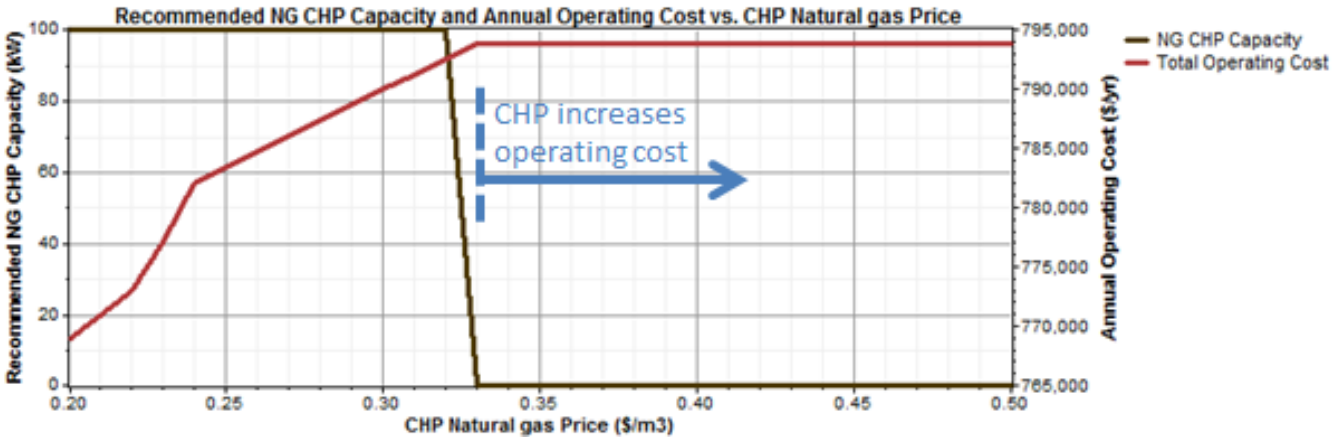

3 System Architectures Summary:

Detailed system reports follow the table. All costs are in 2014 dollars.

Scenario	System architecture	Normal operation			Emergency operation		
		Initial Capital Cost[1]	Annual Operating Cost for Community	Emissions	% of campus load that can be met for 3 days	NG for Electrical Generation 3 Day outage at specified load level	NG for thermal boiler
		($)	($/yr)	(CO_2e kg/yr)	(%)	(m^3)*	(m^3)*
Baseline	**Grid + non-islandable PV and 240 kW genset connected to specific critical loads**	**$0**	**$793,853**	**3,156,110**	**<25% (Insufficient data)**	**Insufficient data for more precise statement at this time**	
1	Baseline+ Islanding Switchgear for both Existing Genset and PV + Storage for 1 hour of backup at peak load	$1,040,000	$839,853	3,156,110	35%	4,963 @ 35% load 3,918 @ 25% load	11,784
2	Baseline + new Natural Gas Combined Heat and Power (CHP) Unit with Islanding capability	$400,000	$816,366	3,111,715	10%	1,222	11,387

* 2.967 m^3/therm

[1] Approximate break-downs of capital and annual operating costs can be found in the project plan.

4 System Report - 18.1&2 High & Jr High Baseline

4.1 System architecture

PV Array	206 kW
Grid	

4.2 Electrical

Component	Production (kWh/yr)	Percentage (%)
PV array	259,945	8%
Grid purchases	3,121,507	92%
Total	**3,381,452**	**100%**

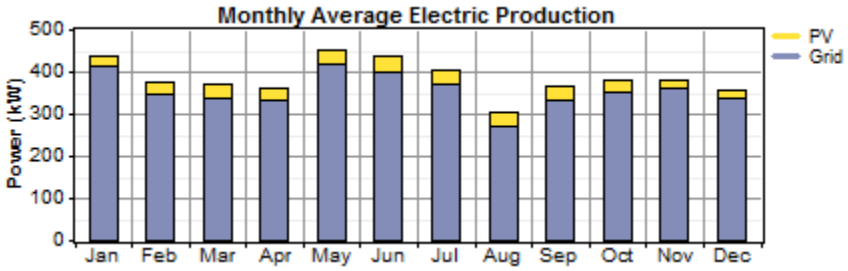

4.3 Thermal

Component	Production (kWh/yr)	Percentage (%)
Boiler	5,118,061	100%
Total	**5,118,061**	**100%**

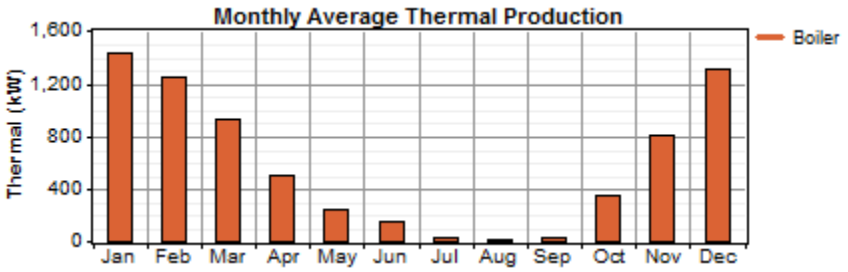

Load	Consumption	Percentage
	(kWh/yr)	(%)
Thermal load	5,118,061	100%
Total	**5,118,061**	**100%**

Quantity	Value	Units
Excess thermal energy	0.00	kWh/yr

4.4 PV

Quantity	Value	Units
Rated capacity	206	kW
Mean output	29.7	kW
Mean output	712	kWh/d
Capacity factor	14.4	%
Total production	259,945	kWh/yr

4.5 GRID

Rate: B3 Winter

Month	Energy Purchased	Energy Sold	Net Purchases	Peak Demand	Energy Charge	Demand Charge
	(kWh)	(kWh)	(kWh)	(kW)	($)	($)
Jan	309,113	0	309,113	768	22,644	13,793
Feb	232,961	0	232,961	731	17,053	13,123
Mar	251,747	0	251,747	729	18,415	13,097
Apr	238,602	0	238,602	938	17,481	16,840
May	310,446	0	310,446	1,267	22,800	22,749
Jun	0	0	0	0	21,342	0
Jul	0	0	0	0	20,195	0
Aug	0	0	0	0	14,737	0

Month	Energy Purchased	Energy Sold	Net Purchases	Peak Demand	Energy Charge	Demand Charge
	(kWh)	(kWh)	(kWh)	(kW)	($)	($)
Sep	0	0	0	0	17,802	0
Oct	262,999	0	262,999	930	19,301	16,694
Nov	259,312	0	259,312	837	19,006	15,024
Dec	250,327	0	250,327	753	18,334	13,517
Annual	**2,115,508**	**0**	**2,115,508**	**1,267**	**229,111**	**124,838**

Rate: B3 Summer

Month	Energy Purchased	Energy Sold	Net Purchases	Peak Demand	Energy Charge	Demand Charge
	(kWh)	(kWh)	(kWh)	(kW)	($)	($)
Jan	0	0	0	0	0	0
Feb	0	0	0	0	0	0
Mar	0	0	0	0	0	0
Apr	0	0	0	0	0	0
May	0	0	0	0	0	0
Jun	289,655	0	289,655	1,192	0	28,524
Jul	274,575	0	274,575	1,016	0	24,324
Aug	200,295	0	200,295	1,095	0	26,199
Sep	241,475	92	241,383	1,264	0	30,249
Oct	0	0	0	0	0	0
Nov	0	0	0	0	0	0
Dec	0	0	0	0	0	0
Annual	**1,006,000**	**92**	**1,005,908**	**1,264**	**0**	**109,297**

Rate: All

Month	Energy Purchased	Energy Sold	Net Purchases	Peak Demand	Energy Charge	Demand Charge
	(kWh)	(kWh)	(kWh)	(kW)	($)	($)
Jan	309,113	0	309,113	768	22,644	13,793
Feb	232,961	0	232,961	731	17,053	13,123
Mar	251,747	0	251,747	729	18,415	13,097
Apr	238,602	0	238,602	938	17,481	16,840
May	310,446	0	310,446	1,267	22,800	22,749
Jun	289,655	0	289,655	1,192	21,342	28,524
Jul	274,575	0	274,575	1,016	20,195	24,324
Aug	200,295	0	200,295	1,095	14,737	26,199
Sep	241,475	92	241,383	1,264	17,802	30,249
Oct	262,999	0	262,999	930	19,301	16,694
Nov	259,312	0	259,312	837	19,006	15,024
Dec	250,327	0	250,327	753	18,334	13,517
Annual	**3,121,507**	**92**	**3,121,415**	**1,267**	**229,111**	**234,135**

4.6 EMISSIONS

Pollutant	Emissions
	(kg/yr)
Carbon dioxide	3,156,110

5 System Report of Typical Operation – Baseline + Islanding Switchgear for both Existing Genset and PV + Storage

5.1 System Architecture

PV Array	206 kW
NatGasGen 240kW	240 kW
Grid	
Battery	1,300 Generic 12V 1kWh Battery*
Inverter	
Rectifier	
Dispatch strategy	Cycle Charging

5.2 Electrical

Component	Production (kWh/yr)	Percentage (%)
PV array	259,945	8%
NatGasGen 240kW	0	0%
Grid purchases	3,121,507	92%
Total	**3,381,452**	**100%**

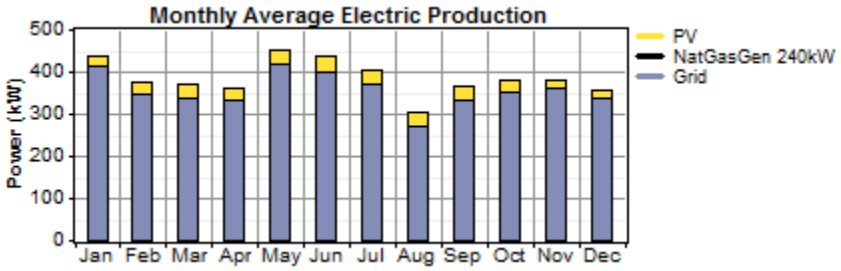

5.3 THERMAL

Component	Production (kWh/yr)	Percentage (%)
Boiler	5,118,061	100%
Total	**5,118,061**	**100%**

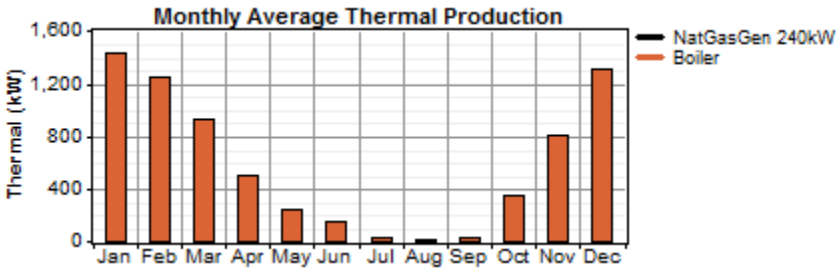

Load	Consumption (kWh/yr)	Percentage (%)
Thermal load	5,118,061	100%
Total	**5,118,061**	**100%**

Quantity	Value	Units
Excess thermal energy	0.00	kWh/yr

5.4 PV

Quantity	Value	Units
Rated capacity	206	kW
Mean output	29.7	kW
Mean output	712	kWh/d
Capacity factor	14.4	%
Total production	**259,945**	**kWh/yr**

5.5 Battery

Quantity	Value
String size	1
Strings in parallel	1,300
Batteries	1,300
Bus voltage (V)	12

Quantity	Value	Units
Nominal capacity	1,299	kWh
Usable nominal capacity	780	kWh
Autonomy	2.02	hr
Lifetime throughput	1,040,000	kWh
Battery wear cost	0.699	$/kWh
Average energy cost	0.000	$/kWh

Quantity	Value	Units
Energy in	0.00	kWh/yr
Energy out	0.00	kWh/yr
Storage depletion	0.00	kWh/yr
Losses	0.00	kWh/yr
Annual throughput	0	kWh/yr
Expected life	10.0	yr

5.6 GRID

Rate: B3 Winter

Month	Energy Purchased	Energy Sold	Net Purchases	Peak Demand	Energy Charge	Demand Charge
	(kWh)	(kWh)	(kWh)	(kW)	($)	($)
Jan	309,113	0	309,113	768	22,644	13,793
Feb	232,961	0	232,961	731	17,053	13,123
Mar	251,747	0	251,747	729	18,415	13,097
Apr	238,602	0	238,602	938	17,481	16,840
May	310,446	0	310,446	1,267	22,800	22,749
Jun	0	0	0	0	21,342	0
Jul	0	0	0	0	20,195	0
Aug	0	0	0	0	14,737	0
Sep	0	0	0	0	17,802	0
Oct	262,999	0	262,999	930	19,301	16,694
Nov	259,312	0	259,312	837	19,006	15,024
Dec	250,327	0	250,327	753	18,334	13,517
Annual	**2,115,508**	**0**	**2,115,508**	**1,267**	**229,111**	**124,838**

Rate: B3 Summer

Month	Energy Purchased	Energy Sold	Net Purchases	Peak Demand	Energy Charge	Demand Charge
	(kWh)	(kWh)	(kWh)	(kW)	($)	($)
Jan	0	0	0	0	0	0
Feb	0	0	0	0	0	0
Mar	0	0	0	0	0	0
Apr	0	0	0	0	0	0
May	0	0	0	0	0	0
Jun	289,655	0	289,655	1,192	0	28,524
Jul	274,575	0	274,575	1,016	0	24,324
Aug	200,295	0	200,295	1,095	0	26,199
Sep	241,475	92	241,383	1,264	0	30,249
Oct	0	0	0	0	0	0
Nov	0	0	0	0	0	0
Dec	0	0	0	0	0	0
Annual	**1,006,000**	**92**	**1,005,908**	**1,264**	**0**	**109,297**

Rate: All

Month	Energy Purchased	Energy Sold	Net Purchases	Peak Demand	Energy Charge	Demand Charge
	(kWh)	(kWh)	(kWh)	(kW)	($)	($)
Jan	309,113	0	309,113	768	22,644	13,793
Feb	232,961	0	232,961	731	17,053	13,123
Mar	251,747	0	251,747	729	18,415	13,097
Apr	238,602	0	238,602	938	17,481	16,840
May	310,446	0	310,446	1,267	22,800	22,749
Jun	289,655	0	289,655	1,192	21,342	28,524
Jul	274,575	0	274,575	1,016	20,195	24,324
Aug	200,295	0	200,295	1,095	14,737	26,199
Sep	241,475	92	241,383	1,264	17,802	30,249
Oct	262,999	0	262,999	930	19,301	16,694
Nov	259,312	0	259,312	837	19,006	15,024
Dec	250,327	0	250,327	753	18,334	13,517
Annual	**3,121,507**	**92**	**3,121,415**	**1,267**	**229,111**	**234,135**

5.7 EMISSIONS

Pollutant	Emissions
	(kg/yr)
Carbon dioxide	3,156,110

6 System Report of Typical Operation – Architecture 5: Baseline + new Natural Gas Combined Heat and Power (CHP) Unit with Islanding capability

6.1 Sensitivity case

CHP Natural gas Price:	0.5 $/m3

6.2 System architecture

PV Array	206 kW
NG CHP	100 kW
Grid	

6.3 Electrical

Component	Production (kWh/yr)	Percentage (%)
PV array	259,945	8%
NG CHP	217,200	6%
Grid purchases	2,904,394	86%
Total	**3,381,538**	**100%**

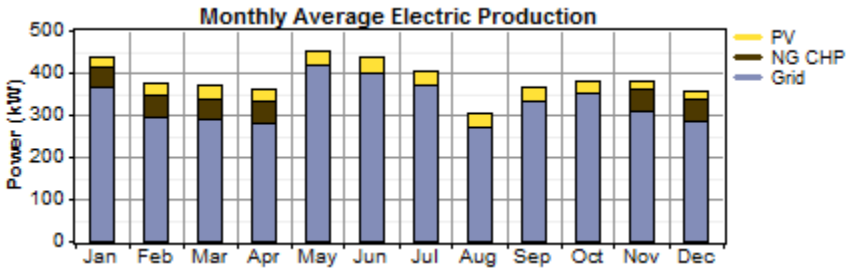

6.4 Thermal

Component	Production (kWh/yr)	Percentage (%)
NG CHP	196,232	4%
Boiler	4,921,824	96%
Total	**5,118,056**	**100%**

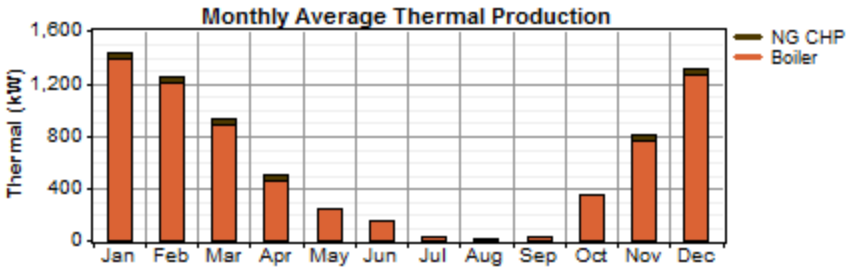

6.5 PV

Quantity	Value	Units
Rated capacity	206	kW
Mean output	29.7	kW
Mean output	712	kWh/d
Capacity factor	14.4	%
Total production	**259,945**	**kWh/yr**

6.6 NG CHP

Quantity	Value	Units
Hours of operation	4,344	hr/yr
Number of starts	2	starts/yr
Operational life	4.60	yr
Capacity factor	24.8	%
Fixed generation cost	6.42	$/hr
Marginal generation cost	0.140	$/kWhyr

Quantity	Value	Units
Electrical production	217,200	kWh/yr
Mean electrical output	50.0	kW
Min. electrical output	50.0	kW
Max. electrical output	50.0	kW
Thermal production	196,232	kWh/yr

Quantity	Value	Units
Mean thermal output	45.2	kW
Min. thermal output	45.2	kW
Max. thermal output	45.2	kW

Quantity	Value	Units
Fuel consumption	71,676	m3/yr
Specific fuel consumption	0.330	m3/kWh
Fuel energy input	707,801	kWh/yr
Mean electrical efficiency	30.7	%
Mean total efficiency	58.4	%

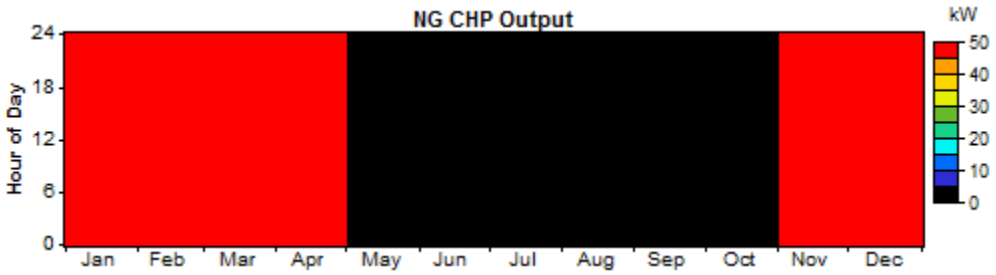

6.7 GRID

Rate: B3 Winter

Month	Energy Purchased	Energy Sold	Net Purchases	Peak Demand	Energy Charge	Demand Charge
	(kWh)	(kWh)	(kWh)	(kW)	($)	($)
Jan	271,914	0	271,914	718	19,928	12,895
Feb	199,360	0	199,360	681	14,600	12,225
Mar	214,547	0	214,547	679	15,701	12,199
Apr	202,603	0	202,603	888	14,853	15,942

Month	Energy Purchased	Energy Sold	Net Purchases	Peak Demand	Energy Charge	Demand Charge
	(kWh)	(kWh)	(kWh)	(kW)	($)	($)
May	310,446	0	310,446	1,267	22,800	22,749
Jun	0	0	0	0	21,342	0
Jul	0	0	0	0	20,195	0
Aug	0	0	0	0	14,737	0
Sep	0	0	0	0	17,802	0
Oct	262,999	0	262,999	930	19,301	16,694
Nov	223,397	85	223,312	787	16,382	14,126
Dec	213,128	1	213,127	703	15,619	12,619
Annual	**1,898,394**	**86**	**1,898,308**	**1,267**	**213,261**	**119,450**

Rate: B3 Summer

Month	Energy Purchased	Energy Sold	Net Purchases	Peak Demand	Energy Charge	Demand Charge
	(kWh)	(kWh)	(kWh)	(kW)	($)	($)
Jan	0	0	0	0	0	0
Feb	0	0	0	0	0	0
Mar	0	0	0	0	0	0
Apr	0	0	0	0	0	0
May	0	0	0	0	0	0
Jun	289,655	0	289,655	1,192	0	28,524
Jul	274,575	0	274,575	1,016	0	24,324
Aug	200,295	0	200,295	1,095	0	26,199
Sep	241,475	92	241,383	1,264	0	30,249
Oct	0	0	0	0	0	0

Month	Energy Purchased	Energy Sold	Net Purchases	Peak Demand	Energy Charge	Demand Charge
	(kWh)	(kWh)	(kWh)	(kW)	($)	($)
Nov	0	0	0	0	0	0
Dec	0	0	0	0	0	0
Annual	**1,006,000**	**92**	**1,005,908**	**1,264**	**0**	**109,297**

Rate: All

Month	Energy Purchased	Energy Sold	Net Purchases	Peak Demand	Energy Charge	Demand Charge
	(kWh)	(kWh)	(kWh)	(kW)	($)	($)
Jan	271,914	0	271,914	718	19,928	12,895
Feb	199,360	0	199,360	681	14,600	12,225
Mar	214,547	0	214,547	679	15,701	12,199
Apr	202,603	0	202,603	888	14,853	15,942
May	310,446	0	310,446	1,267	22,800	22,749
Jun	289,655	0	289,655	1,192	21,342	28,524
Jul	274,575	0	274,575	1,016	20,195	24,324
Aug	200,295	0	200,295	1,095	14,737	26,199
Sep	241,475	92	241,383	1,264	17,802	30,249
Oct	262,999	0	262,999	930	19,301	16,694
Nov	223,397	85	223,312	787	16,382	14,126
Dec	213,128	1	213,127	703	15,619	12,619
Annual	**2,904,394**	**178**	**2,904,216**	**1,267**	**213,261**	**228,747**

6.8 EMISSIONS

Pollutant	Emissions
	(kg/yr)
Carbon dioxide	3,111,715