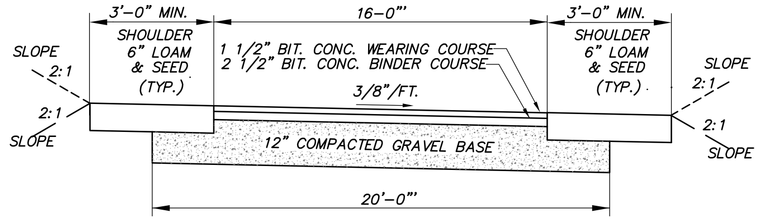

COMMON DRIVEWAY SECTION

(NOT TO SCALE)

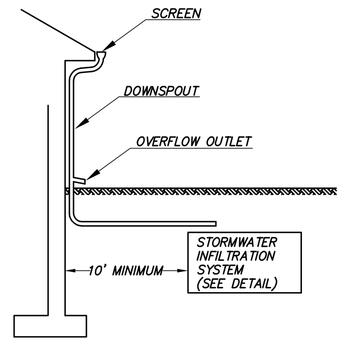

TYPICAL DOWNSPOUT DETAIL (LOT 2 ONLY)

NO SCALE

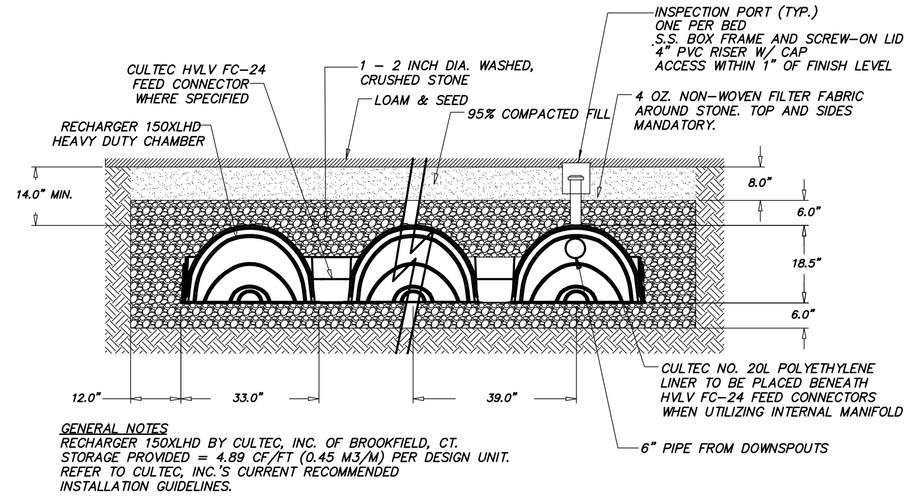

GENERAL NOTES
RECHARGER 150XLHD BY CULTEC, INC. OF BROOKFIELD, CT.
STORAGE PROVIDED = 4.89 CF/FT (0.45 M3/M) PER DESIGN UNIT.
REFER TO CULTEC, INC.'S CURRENT RECOMMENDED INSTALLATION GUIDELINES.

DRY WELL DETAIL – CULTEC RECHARGER 150XL CHAMBER SYSTEM

STORMWATER INFILTRATION SYSTEM

NO SCALE

ELEVATIONS OF CULTEC CHAMBER SYSTEM FOR LOT 2

NO OF CHAMBERS	3X3
EXIST. GRADE (MAX.)	230.0
G.W. ELEV. (APPROX.)	226.0
ELEV. AT BOTTOM OF STONE	228.3
PIPE INVERT ELEV.	229.8
MIN. FINISHED GRADE	231.5
BASE SIZE	23.25' x 11.25'

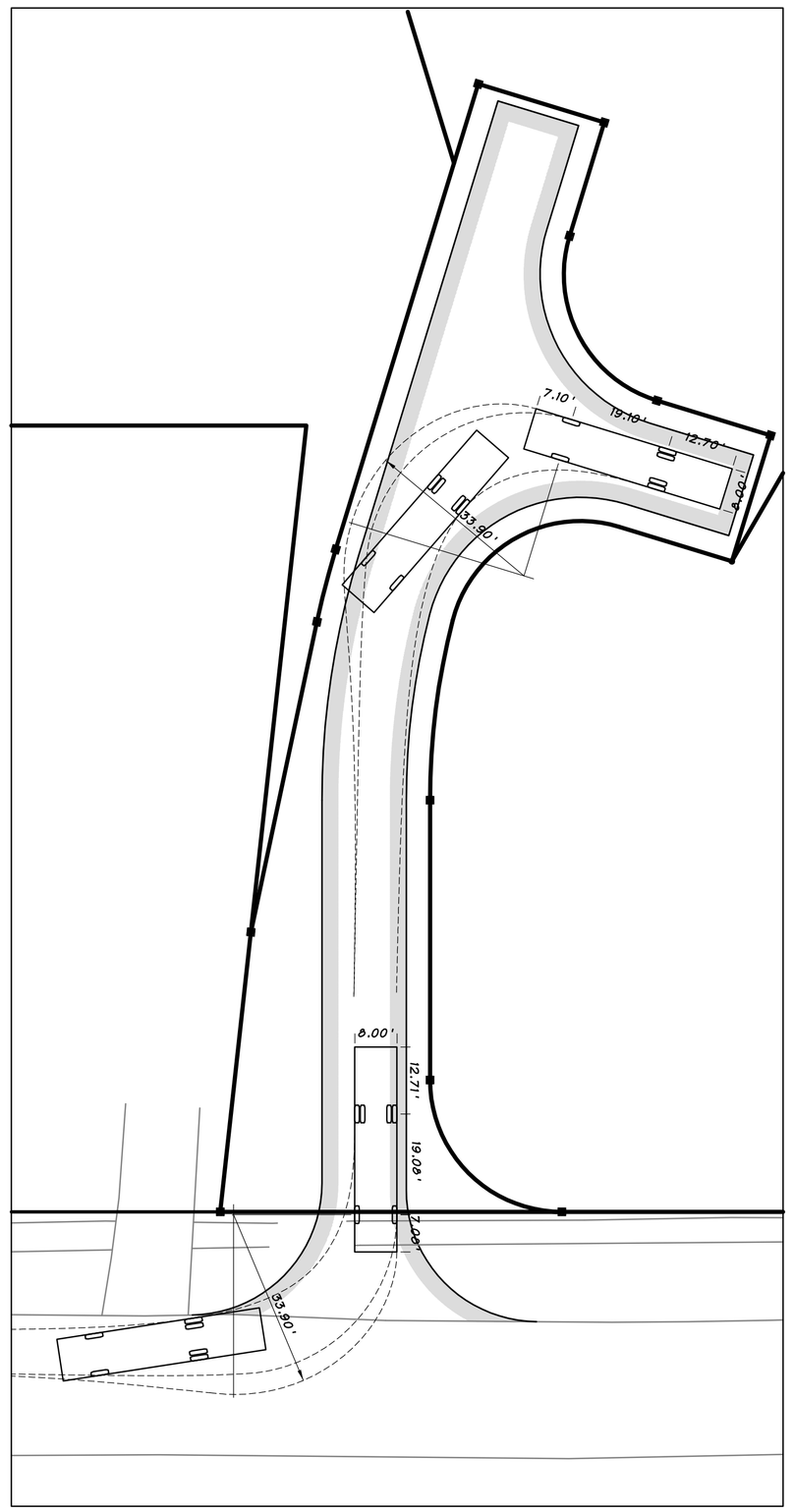

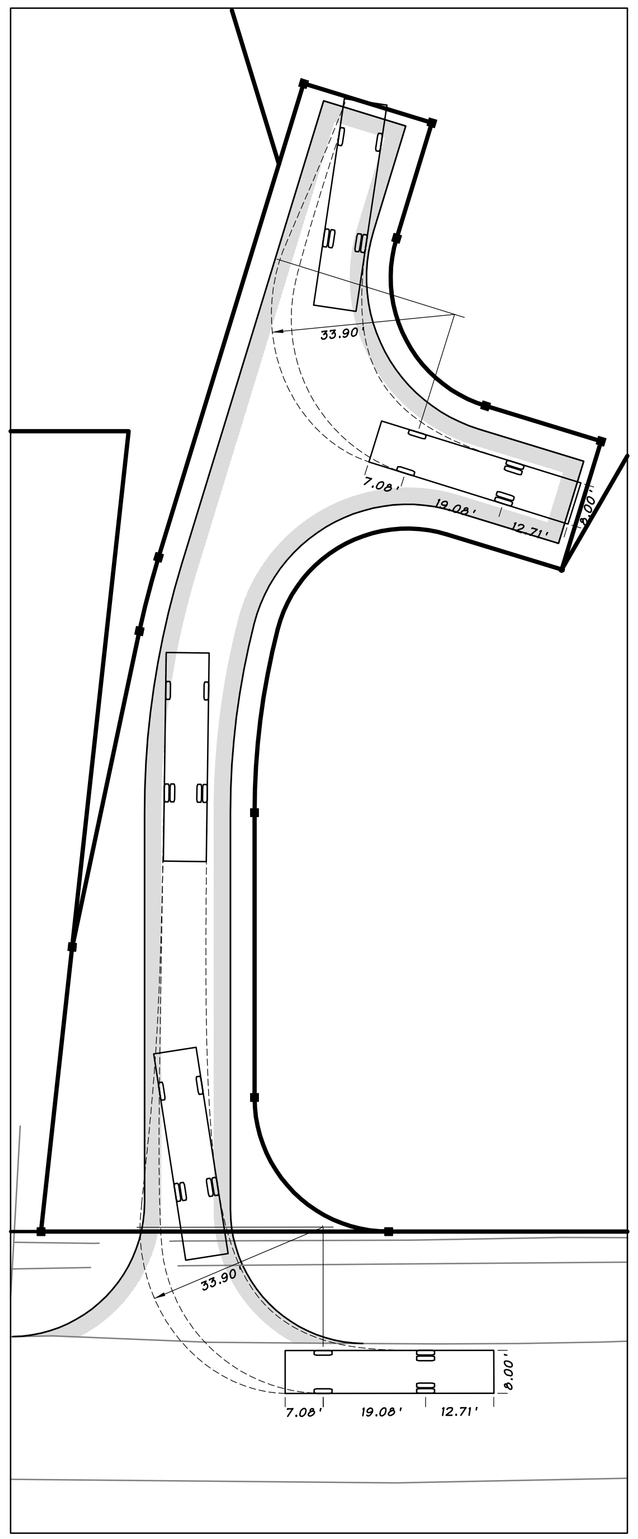

ACTON LADDER TRUCK TURNING RADII

SCALE: 1" = 20'

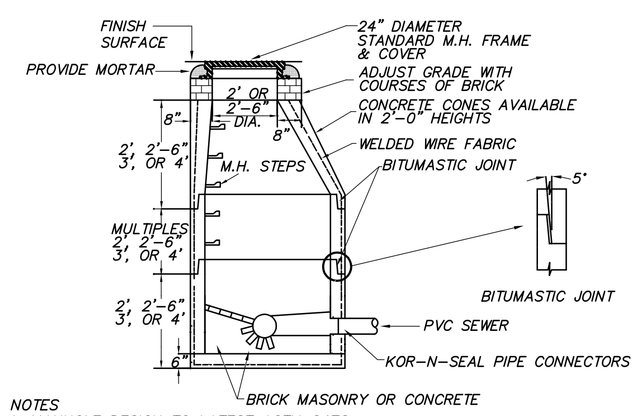

NOTES
1. MANHOLE DESIGN TO LATEST ASTM C478.
2. REINFORCING STEEL CONFORMS TO LATEST ASTM A 185.
3. CONCRETE COMPRESSIVE STRENGTH-4,000 PSI @ 28 DAYS.
4. ONE POUR MONOLITHIC BASE.
5. WHEN SPECIFIED, MANHOLES WATERPROOF COATED.
6. STEPS-STEEL REINFORCED COPOLYMER POLYPROPELENE PLASTIC (PS2-PFSL M.A. INDUSTRIES, INC.) CONFORMS TO LATEST ASTM C478 PARA-12.
7. BITUMASTIC BUTYL RUBBER FOR JOINTS CONFORM TO LATEST ASTM C443 AND FED SS-S-201A SPEC.
8. KOR-N-SEAL FLEXIBLE PIPE CONNECTORS FROM 3.5" TO 21.25" O.D. ASTM C923, A167.

PRECAST CONCRETE SEWER MANHOLE DETAIL (TYP.)

(NOT TO SCALE)

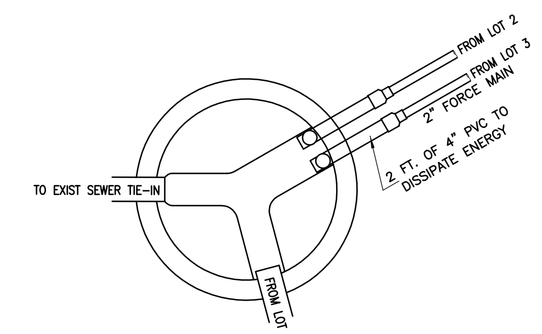

PLAN VIEW

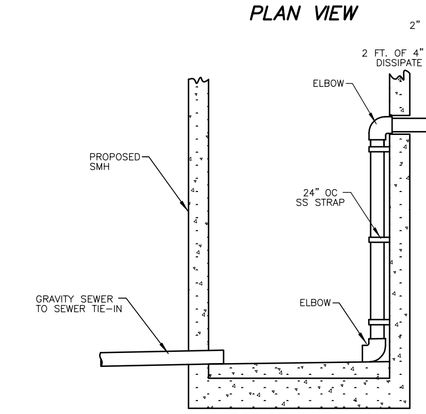

FORCE MAIN TO SMH DETAIL

(NOT TO SCALE)

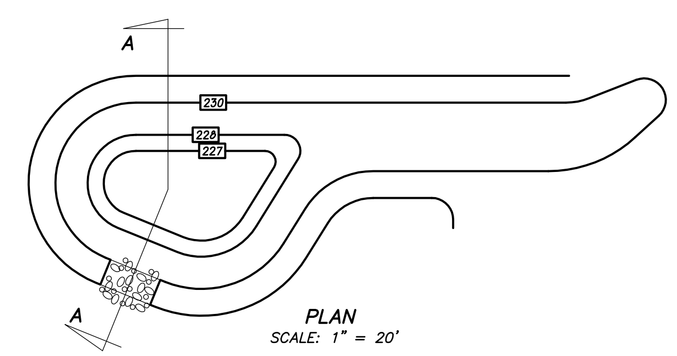

PLAN

SCALE: 1" = 20'

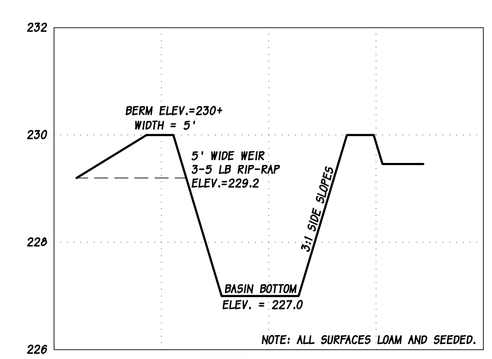

SECTION A–A

HORIZ. SCALE: 1" = 20'

VERT. SCALE: 1" = 2'

RETENTION POND DETAIL

APPROVAL UNDER SUBDIVISION CONTROL LAW REQUIRED

ACTON PLANNING BOARD

DATE _____

#	DATE	REVISION COMMENT

DATE: 02/02/15

COPYRIGHT 2014, MARKEY & RUBIN INC.

COMMONWEALTH OF MASSACHUSETTS IAN M. WORKMAN CIVIL No. 37366 REGISTERED PROFESSIONAL ENGINEER 2-2-15

TITLE:

DEFINITIVE SUBDIVISION DETAIL PLAN

456 MASSACHUSETTS AVE

ACTON, MASSACHUSETTS

CLIENT:

KEENAN & SON, LLP

54 GRISTMILL RD.

LITTLETON, MASSACHUSETTS

360 MASSACHUSETTS AVE. SUITE 200
ACTON, MASSACHUSETTS 01720
P(978) 263-0430 F(978) 263-0447
www.MarkeyAndRubin.com

Markey & Rubin
CIVIL ENGINEERING

D1

SHEET 9 OF 10

JOB# 5092