HIGHWAY DEPARTMENT
SALT SHED

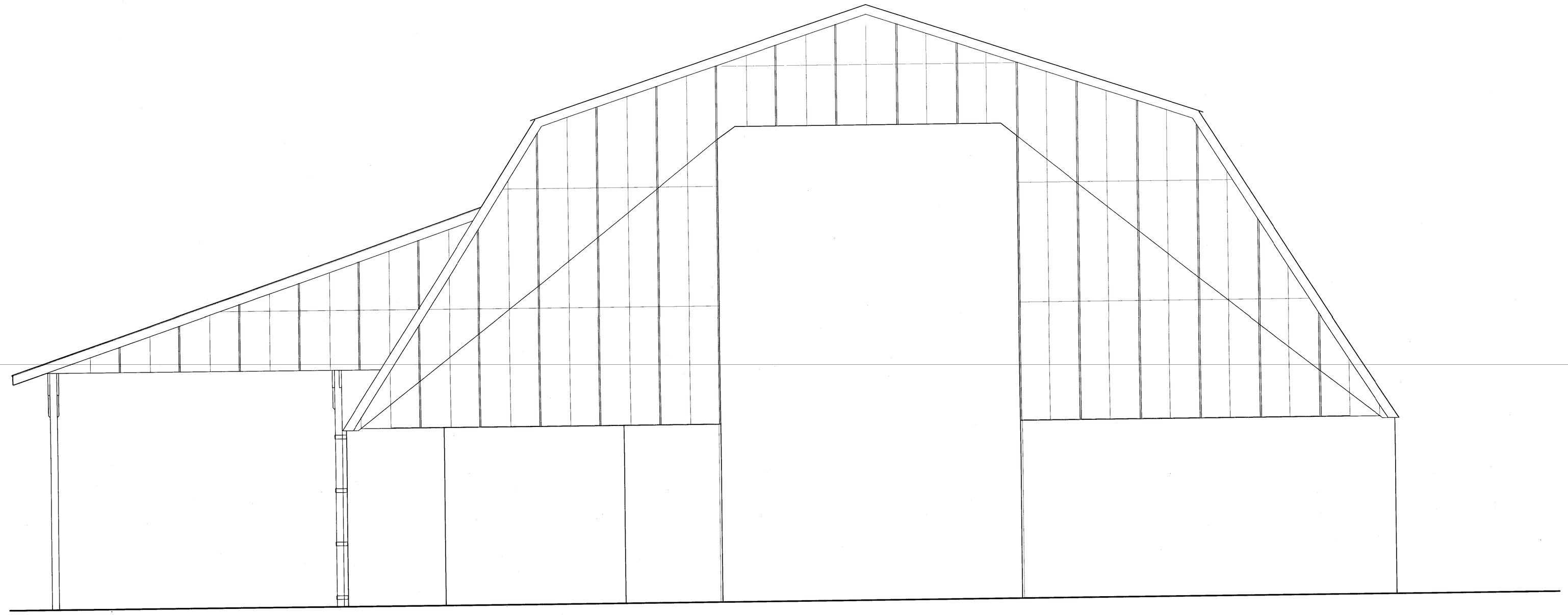

ACTON, MA

REV	DATE	DESCRIPTION
0	03/26/12	ISSUED FOR PERMIT AND CONSTRUCTION

Donkers Structural Consulting LLC
DSC 16 Kenney Road Medfield, MA 02052
p) (508) 359-4075
f) (508) 242-9644

TOWN OF ACTON SALT SHED
14 FOREST ROAD
ACTON, MA

TITLE SHEET

DYMAXAEON
SUSTAINABLE DESIGN & CONSULTING
247 River Street, Waltham, MA 02453
P 617 947.1317 www.dymaxaeon.com

DRAWN BY: EL
CHECKED BY: EL
CADD FILE: XPLT

REGISTERED ARCHITECT
ERIC STEVEN LARSEN
No. 20235
WALTHAM
MA
COMMONWEALTH OF MASSACHUSETTS

DATE: 03/26/12
SCALE: NTS

PROJECT NUMBER: 11067
DRAWING: G0.0

GENERAL NOTES:

GENERAL

1) Structural work shall conform to the requirements of "State of Massachusetts Building Code, 8th Edition."
2) Examine Architectural drawings for verification of locations and dimensions of openings, washes, drips, reveals, and other project requirements not shown on structural drawings.
3) Verify and coordinate dimensions related to this project.
4) Typical details and notes shown on structural drawings shall be applicable to all parts of the structural work except where specifically required otherwise by contract documents.
5) Details not specifically shown shall be similar to those shown for the most nearly similar condition as determined by the Architect.
6) The contractor is to submit complete shop drawings for all parts of the work. No performance of the work shall commence without review of the shop drawings by the Architect.
7) The contractor provide independent testing agency to perform inspections and tests per "Special Inspections List" by Dankers Structural Consulting, LLC.

FOUNDATIONS

1) Exterior construction shall be carried down below finished exterior grade to a minimum depth of 4'-0", unless noted otherwise.
2) Foundations for this project consist of spread footings and foundationwalls. Allowable bearing pressure is assumed to be 2 tons per square foot.
3) Foundation units shall be centered under supported structural members, unless noted otherwise on the drawings.
4) Carry out continuous control of surface and subsurface water during construction such that foundation work is done in the dry and on an undisturbed subgrade material, as applicable.
5) Excavate as required to install footings and foundation walls as detailed. Bottom 3 inches of excavations for footings shall be finished by hand shovel.
6) No foundation concrete shall be placed in water or on frozen subgrade material.
7) Protect in-place foundations and slabs from frost penetration until the project is completed.

BACKFILL

1) All backfill shall be "Common Fill" free of organic and building materials, stones larger than 2", and shall be well graded. Backfill shall be compacted in 12" lifts to 95% compaction.

CONCRETE

1) Concrete work shall conform to "Building Code Requirements for Reinforced Concrete (ACI 318 latest edition)", and "Specification for Structural Concrete for Buildings (ACI 301 latest edition)".
2) Concrete shall be controlled concrete, proportioned, mixed and placed in the presence of a representative of an approved testing agency.
3) Unless noted otherwise all structural concrete shall be normal weight (145 pcf), concrete having the following minimum 28 day compressive strength of 3000 psi with a 4" slump and ¾" aggregate.
4) All concrete exposed to weather, including foundation walls, shall be air-entrained concrete 5% to 7%.
5) Construction joints shown on drawings are mandatory. Omissions, additions or changes shall not be made except with the submittal of a written request together with drawings of the proposed joint locations for approval of the Engineer.
6) Where construction joints are not shown, or when alternate locations are proposed, drawings showing location of construction and control joints and concrete placing sequence shall be submitted to the Architect for approval prior to preparation of the reinforcement shop drawings.
7) Size of concrete placements unless noted otherwise shall be as follows:

	Max.Length (feet)	Max.Area (sq.ft.)
a) Footings and walls	30*	–

* Exceed only where intermediate control joints are provided.

8) Minimum of 72 hours shall elapse between adjacent concrete placements.
9) Concrete shall be placed without horizontal construction joints except where shown or noted.
10) All concrete exposed to view shall have a smooth form finish and rough edges of concrete fro between forms shall be removed.
11) All form tie ends shall be removed and tie holes grouted with non-shrink grout.

REINFORCEMENT

1) Reinforcement work of detailing, fabrication and erection shall conform to "Building Code Requirements for Reinforced Concrete (ACI 318 ", "ACI Detailing Manual", "CRSI Manual of Standard Practice", latest editions.
2) Steel reinforcement, unless noted otherwise, shall conform to the following:
   a) Bars...ASTM A615 grade 60 (yield stress 60,000 psi)
3) Provide and schedule on shop drawings the necessary accessories to hold reinforcement securely in position.
4) Minimum concrete protective covering for reinforcement, unless noted otherwise shall be as follows:
   a) Unformed surfaces cast against and permanently in contact with earth..............................3.0"
   b) Formed surfaces not in contact with earth or exposed to weather; Walls, and slabs
      #11 bars and smaller..........................1.5"
   c) Formed surfaces in contact with earth or exposed to weather; Walls, and slabs
      #6 to #18 bars....................................2.0"
      #5 bars and smaller............................1.5"
5) Where continuous reinforcement is called for it shall be extended continuously around corners and lapped at necessary splices or hooked at discontinuous ends. Laps shall be class B tension lap splices, unless noted otherwise.
6) Where reinforcement is not shown on drawings provide reinforcement in accordance with applicable details as determined by the Architect. In no case shall reinforcement be less than the minimum reinforcement permitted by the applicable codes.
7) Where reinforcement is required in section, reinforcement is considered typical wherever the section applies.
8) Notify the Architect at least 24 hrs. prior to any concrete placement.
9) Reinforcement shall be continuous through construction joints.
10) All reinforcing shall be epoxy coated unless noted otherwise.

STRUCTURAL STEEL

1) Structural steel work shall conform to "Specification for Design, Fabrication and Erection of Structural Steel for Buildings (AISC)", "Code of Standard Practice for Steel Building (AISC)" and "Structural Welding Code-Steel (AWS D1.1)", latest editions.
2) Structural steel shall be detailed in accordance with the "Detailing for Construction (AISC)", latest edition, and where required, designed in accordance with the cited references.
3) Structural steel shall be new steel conforming to the following, unless noted otherwise on plan:
   a) Misc. steel, lintels.............................. ASTM A36
   b) Tubes.. ASTM A500 grade B (Fy=46 ksi)
   c) Anchor bolts...................................... ASTM A307
   d) High strength bolts............................. ASTM A325 or ASTM A490 where required
   e) Pipe... ASTM A53 grade B
4) Anchor bolts, leveling plates, or bearing plates shall be located and built into connecting work, preset by templates or similar methods. Plates shall be set in full beds of non-shrink grout.
5) Welded connections shall be made by approved certified welders using filler metal conforming to E70XX.
6) Welds shall develop the full strength of the materials being welded, unless noted otherwise, except that fillet welds shall be a minimum of 3/16".
7) Structural steel framing shall be true and plumb before connections are finally bolted or welded.
8) Field cutting of structural steel or any field modifications of structural steel shall not be made without prior written approval by the Architect for each specific case.
9) Structural steel shall receive the following coatings prior to erection:
   a. Steel exposed to weather shall be hot-dipped galvanized.
   b. Interior steel shall be shall not be primed. See architectural drawings for information on fireproofing requirements.

WOOD

1) Sawn Lumber:
   a.) See Massachusetts State Building Code for minimum bracing and fastening.
   b.) Members shall be set with crown up.
   c.) Members framing to purlins, beams, etc. shall be secured with Simpson Strong-Tie framing anchors or approved equal, unless otherwise noted or shown.
   d.) Design of trusses, truss bracing, bridging, and detailing of truss connections in accordance with the requirements of the contract documents shall be the responsibiltiy of the fabricator's engineer registered in the projects jurisdiction. Calculations and shop drawings consisting of the truss layout plans and truss details, shall be submitted bearing the engineers seal and signature.
   e.) All bolts and lag bolts shall be fitted with galvanized, malleable iron or steel plate washers.
   f.) Connection details show arrangement of structural members only. Design of connections shall be the responsibility of the builder / fabricator.
2) Timber construction shall conform to part 2 "design specifications" as published in the "Timber construction manual" (AITC) and to "National design specification for wood construction".
3) Timber construction shall conform to the Commonwealth of Massachusetts State Building Code.
4) Material properties for timber construction shall conform to the following:
   [A] 2x Hem-Fir
      Allowable bending stress.............. Fb = 1100 psi (single member use)
      Fb = 1300 psi (repetitive use)
      Allowable shear stress.................. Fv = 75 psi
      Compression parallel to grain............ = 800 psi
      Compression perpend. to grain.......... = 370 psi
      Modulus of elasticity............................ = 1,400,000 psi
   [B] 3x or greater Southern Pine
      Allowable bending stress.............. Fb = 1400 psi (single member use)
      Fb = 1650 psi (repetitive use)
      Allowable shear stress.................. Fv = 90 psi
      Compression parallel to grain............ = 975 psi
      Compression perpend. to grain.......... = 565 psi
      Modulus of elasticity............................ = 1,600,000 psi
5) No joist shall be notched or drilled with holes without the specific approval of the engineer.
6) No joist shall be repaired or reinforced in any way without the specific approval of the engineer.
7) Joist support by nailing is forbidden unless used with an approved hanger.
8) Timber shall be generally knot-free, with only small tight knots permitted, and generally straight grained.
9) Structural timber shall be identified by the grade mark of, or certificate of inspection issued by, a grading or inspection bureau or agency recognized as being competent.
10) Structural timber shall be visually stress-graded lumber in accordance with the provisions of ASTM designation D245-74, methods for establishing structural grades and related allowable properties for visually graded lumber.
11) Structural timber shall be purchased with maximum moisture content of 15%.
12) Timber shall be so handled and covered as to prevent marring, and moisture absorption from snow or rain.
13) Framing shall comply with the Commonwealth of Massachusetts State Buillding Code 780 CMR.
16) Laminated Veneer Lumber trusses:
   a.) All connections and all erection bracing shall be designed by the truss manufacturer's engineer registered in the projects jurisdiction. Calculations and shop drawings shall be submitted bearing this engineer's seal and signature.
17) "LVL" indicates laminated veneer lumber. LVL's shall be 2.0E VersaLam LVL, by Boise Casade, or approved equal by engineer.
18) Plywood Panels:
   a.) Factory-Mark each construction panel with APA trademark evidencing compliance with grade requiremants.
   b.) Install panels with face grain perpendicular to the supporting members, unless shown otherwise.
   c.) New plywood sheathing shall be adequately nailed to purlins.
   d.) Plywood sheathing shall be ⅝" CDX.

STRUCTURAL DESIGN LOADS

1) Dead loads
   a) Weight of building components
2) Live loads
   a) Roof snow load...................................... Pg = 55 psf
3) Wind load - per Massachusetts State Building Code, Basic Wind Speed = 100 MPH, Exposure B

ABBREVIATIONS:

ADDL.	- ADDITIONAL
ALT.	- ALTERNATE
ACI	- AMERICAN CONCRETE INSTITUTE
AISC	- AMERICAN INSTITUTE OF STEEL CONSTRUCTION
AWS	- AMERICAN WELDING SOCIETY
A.B.	- ANCHOR BOLT
ARCH.	- ARCHITECTURAL
@	- AT
BAL.	- BALANCE
BM.	- BEAM
BRG.	- BEARING
B. or BOT.	- BOTTOM
B.E.W.	- BOTTOM EACH WAY
C.I.P.	- CAST-IN-PLACE
℄	- CENTERLINE
CTRD.	- CENTERED
CL.	- CLEAR
COL.	- COLUMN
COL. REF.	- COLUMN REFERENCE
CONC.	- CONCRETE
CMU	- CONCRETE MASONRY UNITS
CONN.	- CONNECTION
CONST.	- CONSTRUCTION
CONST. JT.	- CONSTRUCTION JOINT
CONT.	- CONTINUOUS
C.J.	- CONTROL JOINT
DIA. or ø	- DIAMETER
DIM.	- DIMENSION
do.	- DITTO
DN.	- DOWN
DWLS.	- DOWELS
DWGS.	- DRAWINGS
EA.	- EACH
E.E.	- EACH END
E.F.	- EACH FACE
E.S.	- EACH SIDE
E.W.	- EACH WAY
EL. or ELEV.	- ELEVATION
EQ.	- EQUAL
EQUIP.	- EQUIPMENT
ETC.	- ET CETERA
EXIST.	- EXISTING
EXP. BOLT	- EXPANSION BOLT
EXP. JT.	- EXPANSION JOINT
EXT.	- EXTERIOR
F.C.O.	- FLOOR CLEAN OUT
F.F.	- FAR FACE
FIN.	- FINISH
F.P.	- FIREPROOF
FL.	- FLOOR
FTG.	- FOOTING
FDN.	- FOUNDATION
GALV.	- GALVANIZED
GR.	- GRADE
GUS.	- GUSSET
HVAC	- HEATING, VENTILATING, AND AIR CONDITIONING
HGT.	- HEIGHT
H.P.	- HIGH POINT
HORIZ.	- HORIZONTAL
H.E.F.	- HORIZONTAL EACH FACE
INFO.	- INFORMATION
INV.	- INVERT
JT.	- JOINT
JST.	- JOIST
K	- KIP (1000 POUNDS)
LE	- LEFT END
LW	- LIGHTWEIGHT CONCRETE
LMF	- LIGHT METAL FRAMING
LLV	- LONG LEG VERTICAL
LP	- LOW POINT
MFG.	- MANUFACTURER
MAX.	- MAXIMUM
MECH.	- MECHANICAL
MEZZ.	- MEZZANINE
MID.	- MIDDLE
MIN.	- MINIMUM
MISC.	- MISCELLANEOUS
N.F.	- NEAR FACE
NW	- NORMAL WEIGHT CONCRETE
NTS	- NOT TO SCALE
NO.	- NUMBER
O.C.	- ON CENTER
OPG.	- OPENING
OPP.	- OPPOSITE
PL.	- PLATE
PT.	- PT.
PVC	- POLYVINYL CHLORIDE
PSF	- POUNDS PER SQUARE FOOT
PSI	- POUNDS PER SQUARE INCH
P.C.	- PRECAST CONCRETE
P.T.	- PRESSURE TREATED
REINF.	- REINFORCING
REQD.	- REQUIRED
RE	- RIGHT END
SCH.	- SCHEDULE
SECT.	- SECTION
S.C.	- SHEAR CONNECTOR
SIM.	- SIMILAR
SPA.	- SPACES
SPECS.	- SPECIFICATIONS
SQ.	- SQUARE
SS	- STAINLESS STEEL
STD.	- STANDARD
STL.	- STEEL
S.F.	- STEP FOOTING
STIFF.	- STIFFENER
STR.	- STRUCTURAL
SUP.	- SUPPORT
SYM.	- SYMMETRICAL
TEMP.	- TEMPERATURE
THK.	- THICK or THICKNESS
THRD.	- THREADED
TIM.	- TIMBER
T.	- TOP
T&B	- TOP AND BOTTOM
T.O.C.	- TOP OF CONCRETE
T.O.S.	- TOP OF STEEL
T.O.W.	- TOP OF WALL
TYP.	- TYPICAL
U.N.O.	- UNLESS NOTED OTHERWISE
VERT. /V.	- VERTICAL
V.E.F.	- VERTICAL EACH FACE
V.I.F.	- VERTICAL INSIDE FACE
V.O.F.	- VERTICAL OUTSIDE FACE
W.W.F.	- WELDED WIRE FABRIC
W/	- WITH
WP.	- WORKING POINT
x	- TIMES or BY

DSC Dankers Structural Consulting LLC
16 Kenney Road
Medfield, MA 02052
p) (508) 359-4075
f) (508) 242-9644

COMMONWEALTH OF MASSACHUSETTS
IMANTS DANKERS
STRUCTURAL
No. 33689
REGISTERED PROFESSIONAL ENGINEER

4/9/12

DRAWN: ID
CHECKED: ID
SCALE: AS NOTED
DATE: 03/26/12
ISSUED FOR PERMIT AND CONSTRUCTION

SALT STORAGE SHED
ACTON DPW FACILITY
ACTON, MA

NOTES

PROJECT NO.
11067

DRAWING
S0

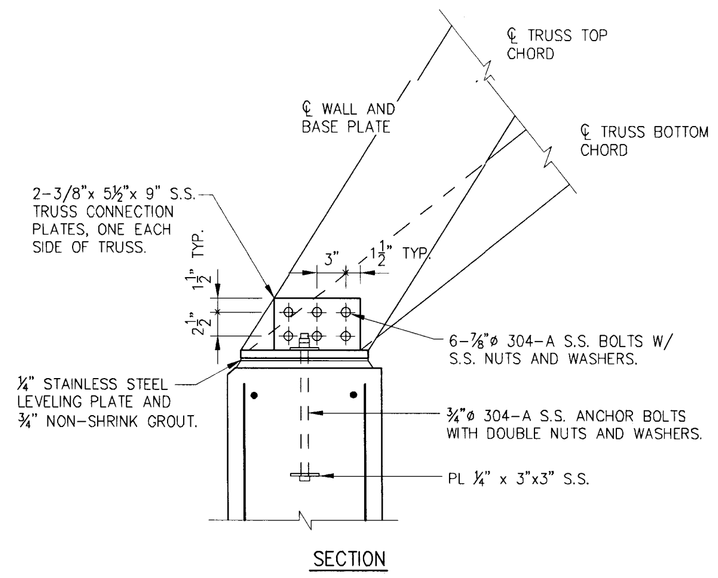

3 BEARING PLATE DETAIL
SCALE: 1"=1'-0"

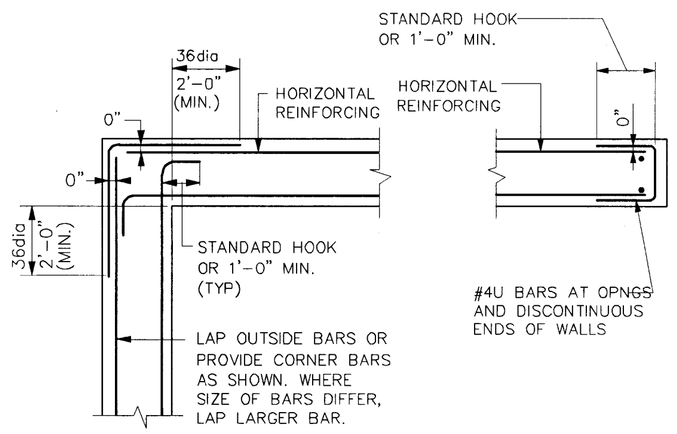

4 PLAN OF HORIZONTAL REINFORCING AT CORNERS AND END OF CONCRETE WALLS
NO SCALE

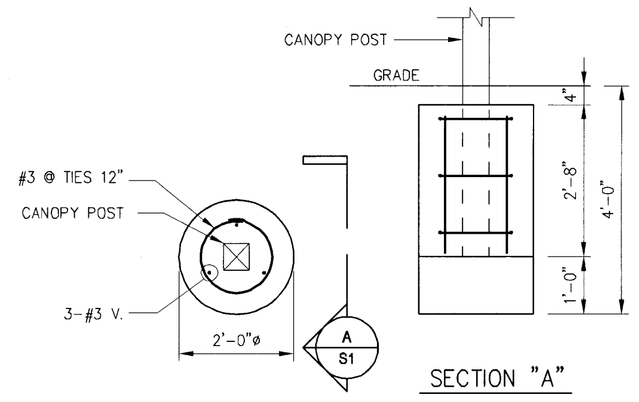

2 TYPICAL SECTION AT CANOPY FOOTING
SCALE: 1/2"=1'-0"

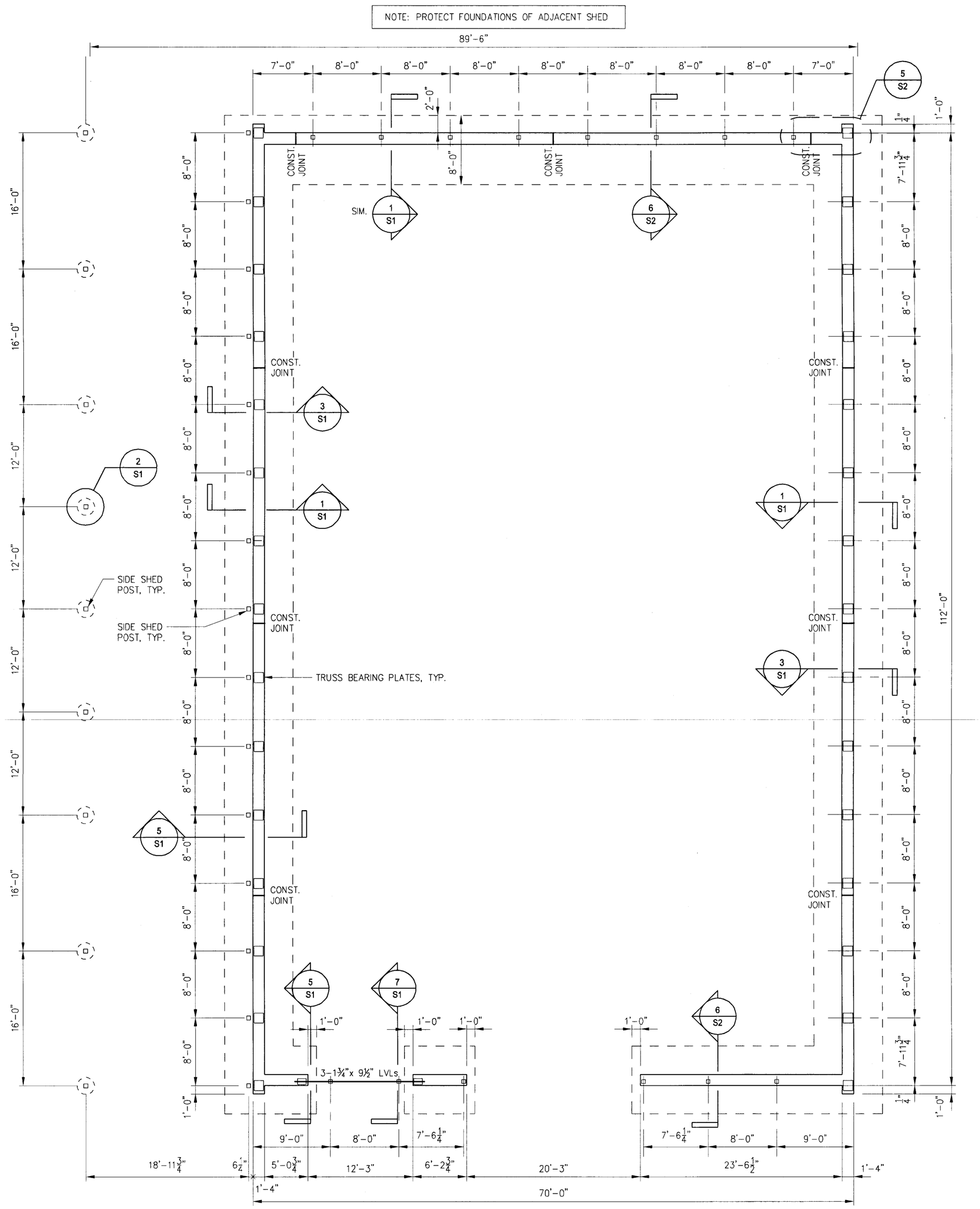

FOUNDATION PLAN
SCALE: 1/8"=1'-0"

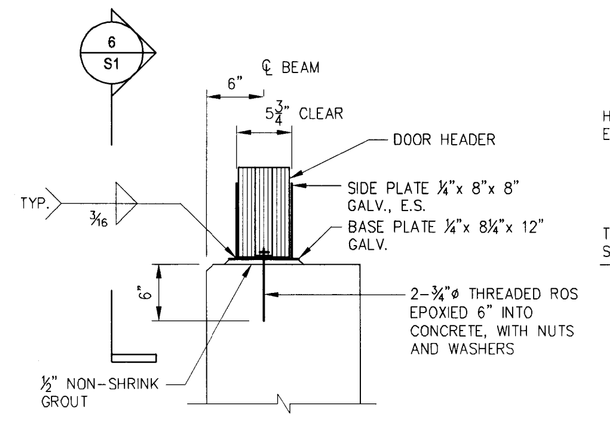

5 BEAM BEARING PLATE SECTION
SCALE: 1"=1'-0"

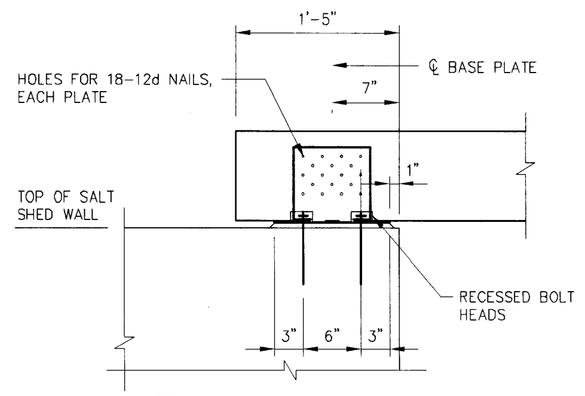

6 BEAM BEARING PLATE SECTION
SCALE: 1"=1'-0"

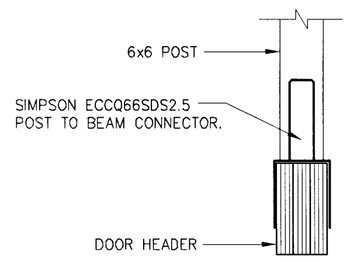

7 SECTION AT DOORWAY POST TO BEAM CONNECTION
SCALE: 1"=1'-0"

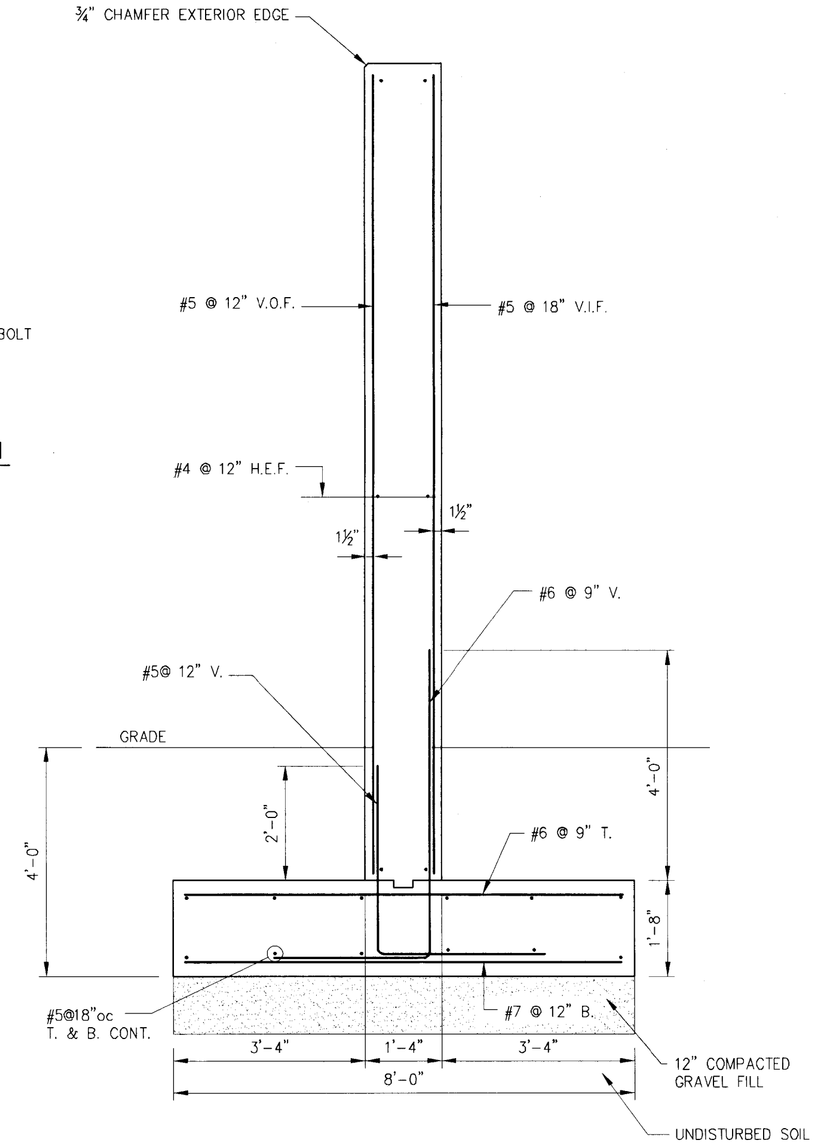

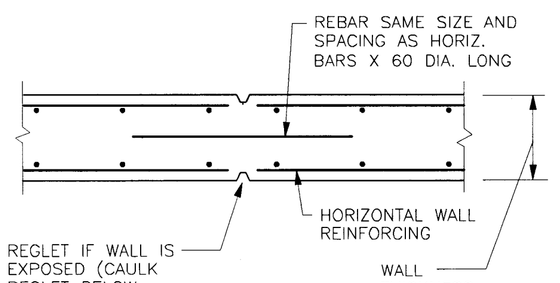

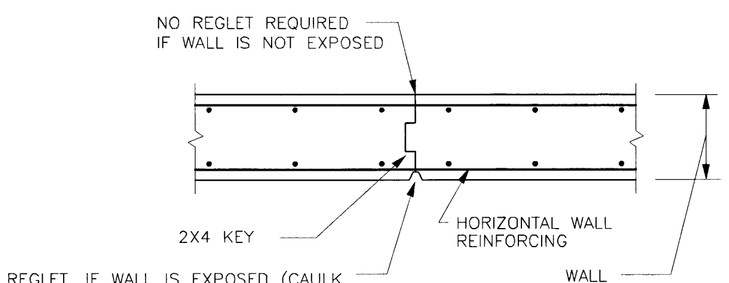

Dankers Structural Consulting LLC
16 Kenney Road
Medfield, MA 02052
p) (508) 359-4075
f) (508) 242-9644

COMMONWEALTH OF MASSACHUSETTS
IMANTS STAKELBERG
No. 33959
REGISTERED PROFESSIONAL ENGINEER
4/9/12

DRAWN: ID
CHECKED: ID
SCALE: AS NOTED
DATE: 03-26-12 ISSUED FOR PERMIT AND CONSTRUCTION

SALT STORAGE SHED
ACTON DPW FACILITY
ACTON, MA

FOUNDATION PLAN
SECTION AND DETAILS

PLAN NORTH

PROJECT NO.
11067

DRAWING
S1

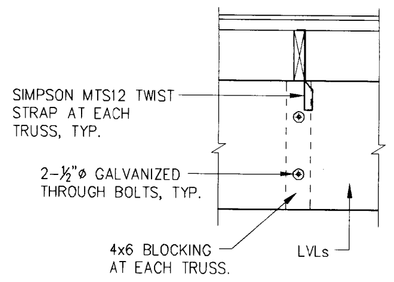

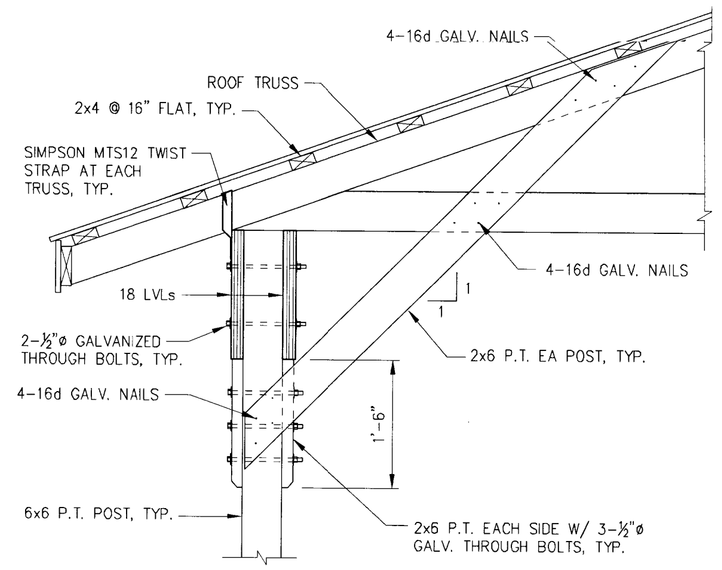

2 SECTION AT SIDE SHED TRUSS BEARING POINTS ON LVL SUPPORT BEAMS
SCALE: 3/4"=1'–0"

1 SECTION AT SIDE SHED EDGE BEAM
SCALE: 3/4"=1'–0"

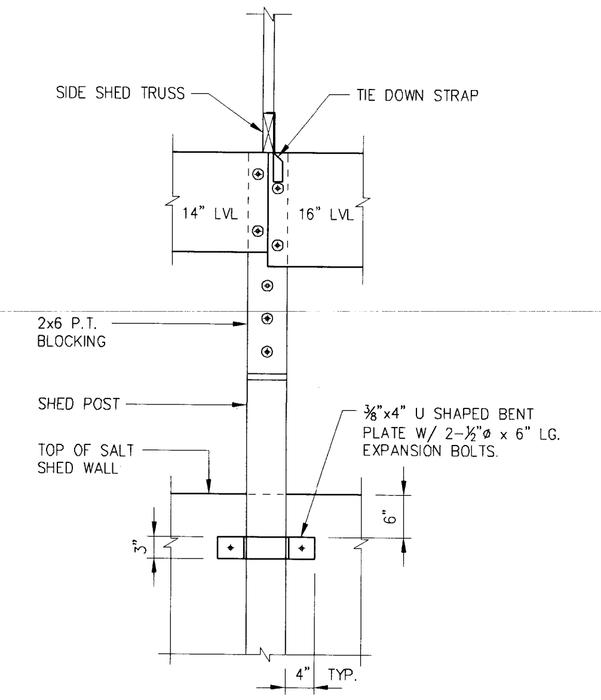

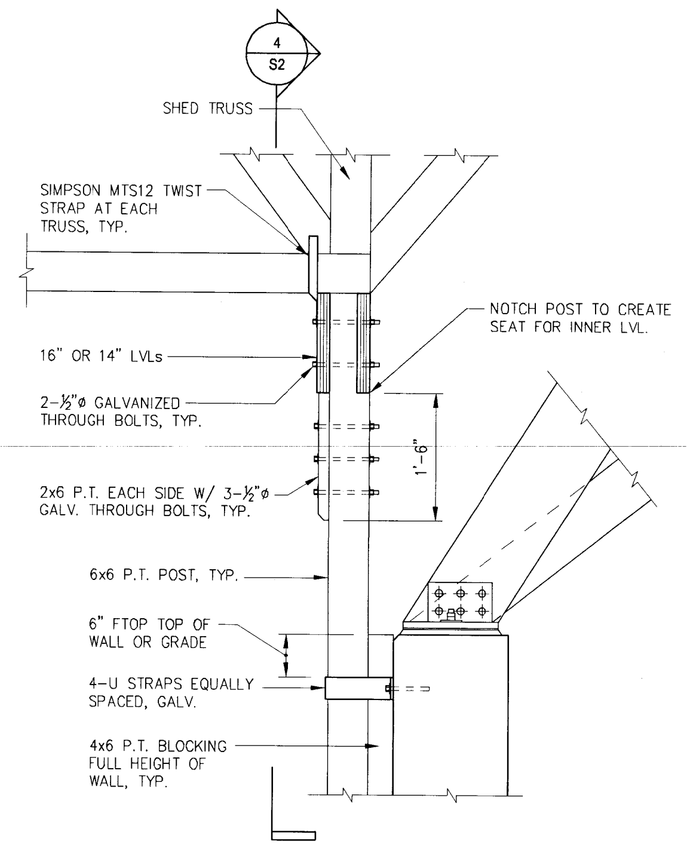

4 SECTION AT SIDE SHED INTERIOR POST
SCALE: 3/4"=1'–0"

3 SECTION AT SIDE SHED INTERIOR POST
SCALE: 3/4"=1'–0"

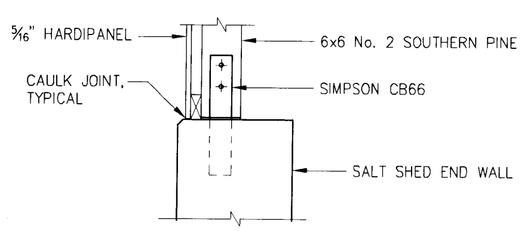

6 SECTION AT END WALL POST
SCALE: 3/4"=1'–0"

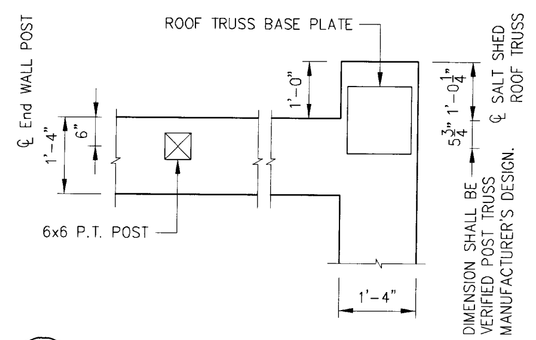

5 DETAIL AT CORNER OF WALL
SCALE: 1/2"=1'–0"

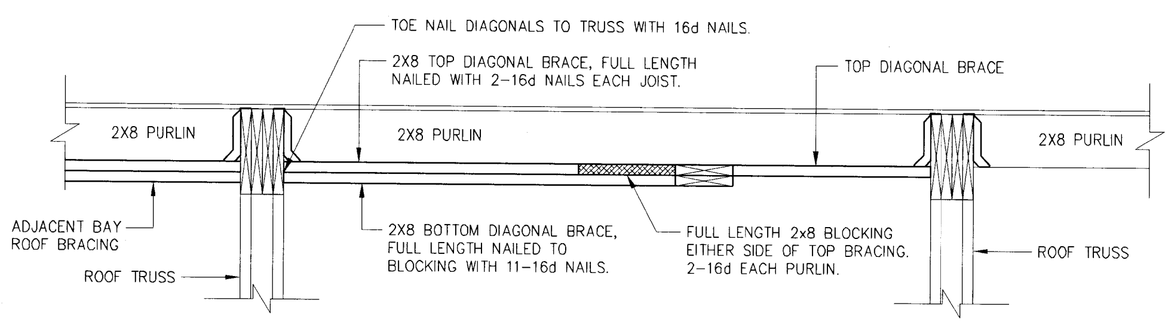

SECTION AT ROOF BRACING

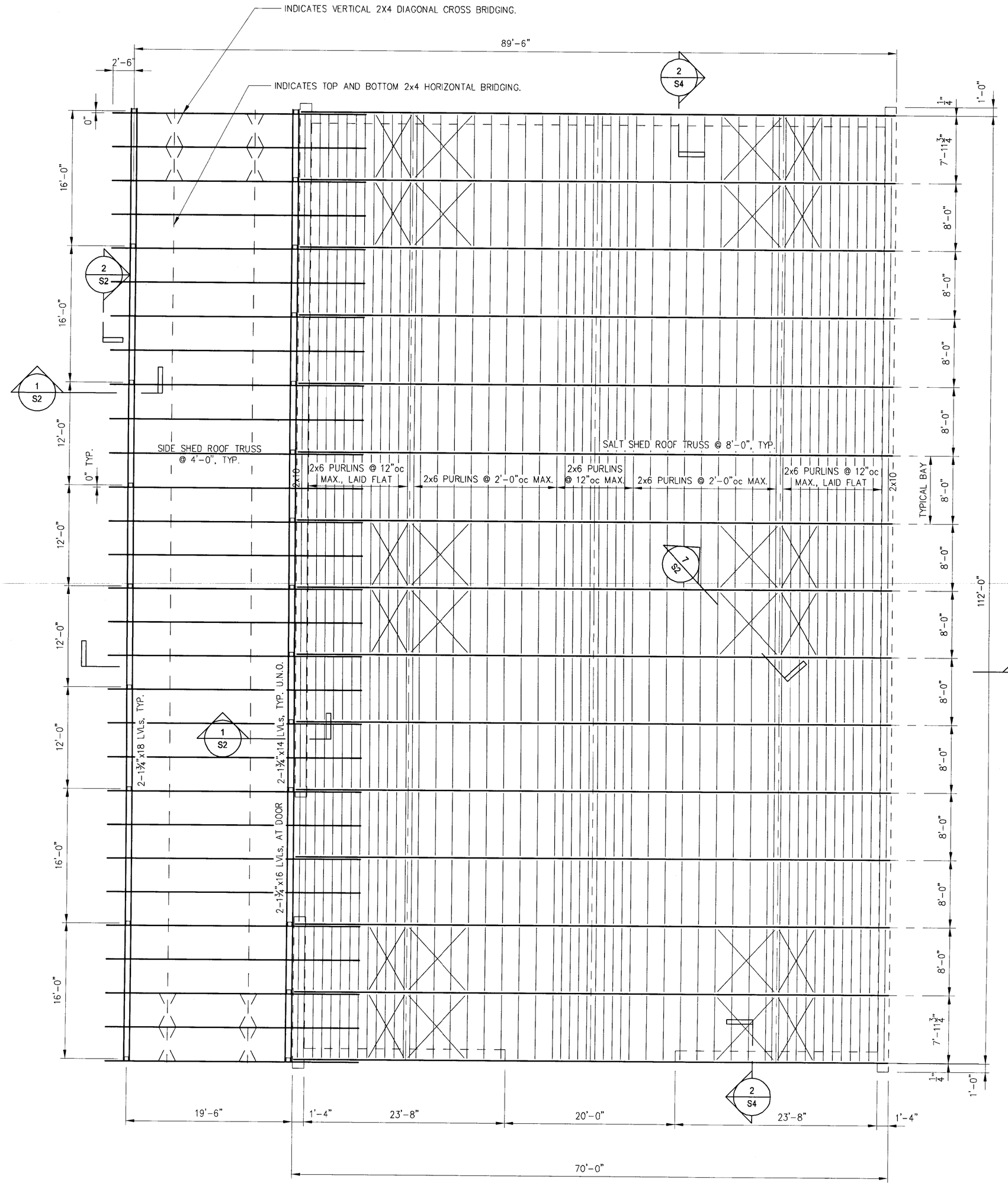

ROOF FRAMING PLAN
SCALE: 1/8"=1'–0"

Dankers Structural Consulting LLC
DSC
16 Kenney Road Medfield, MA 02052
p) (508) 359-4075
f) (508) 242-9644

COMMONWEALTH OF MASSACHUSETTS
IMANTS DANKERS 34989 REGISTERED PROFESSIONAL ENGINEER
4/9/12

DRAWN: ID
CHECKED: ID
SCALE: AS NOTED
DATE: 03/26/12
ISSUED FOR PERMIT AND CONSTRUCTION

SALT STORAGE SHED
ACTON DPW FACILITY
ACTON, MA

ROOF PLAN
SECTION AND DETAILS

PLAN NORTH

PROJECT NO.
11067

DRAWING
S2

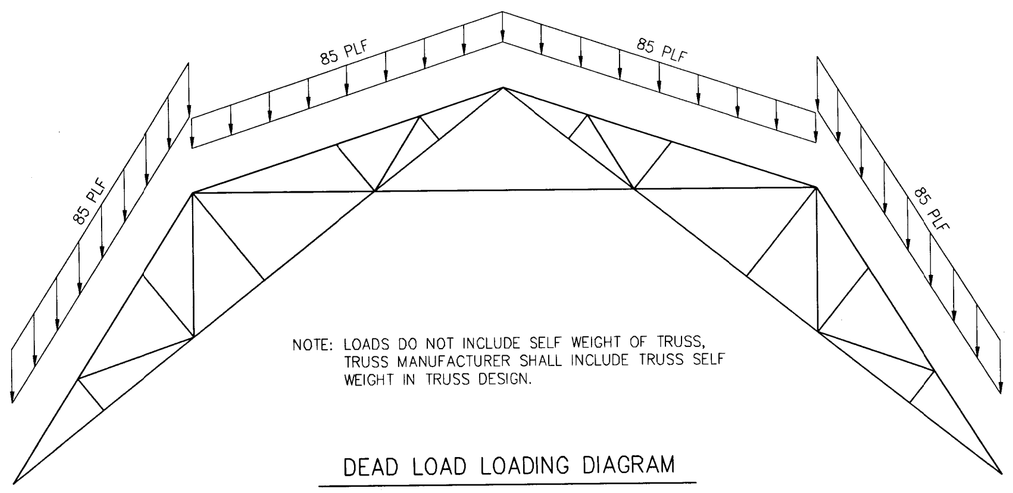

NOTE: LOADS DO NOT INCLUDE SELF WEIGHT OF TRUSS, TRUSS MANUFACTURER SHALL INCLUDE TRUSS SELF WEIGHT IN TRUSS DESIGN.

DEAD LOAD LOADING DIAGRAM

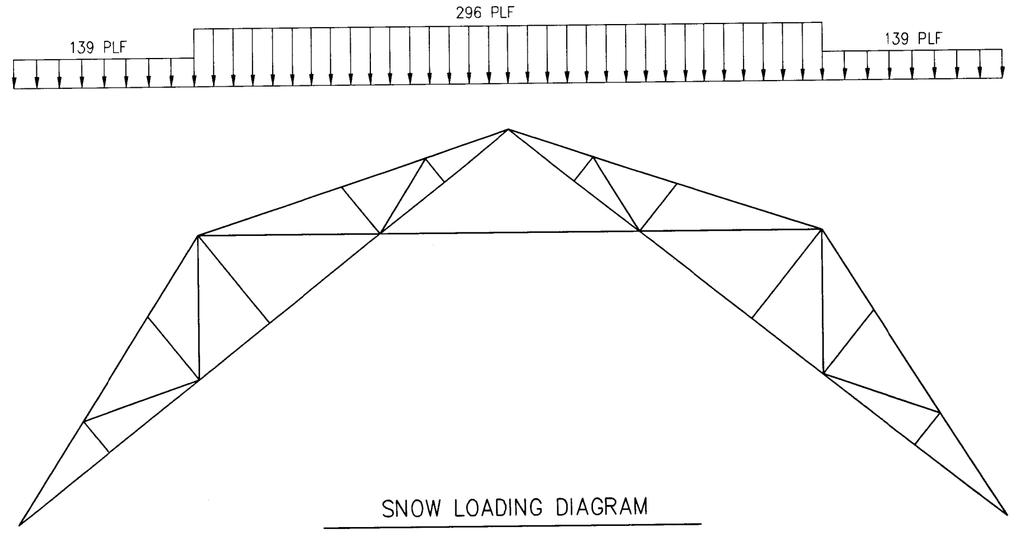

SNOW LOADING DIAGRAM

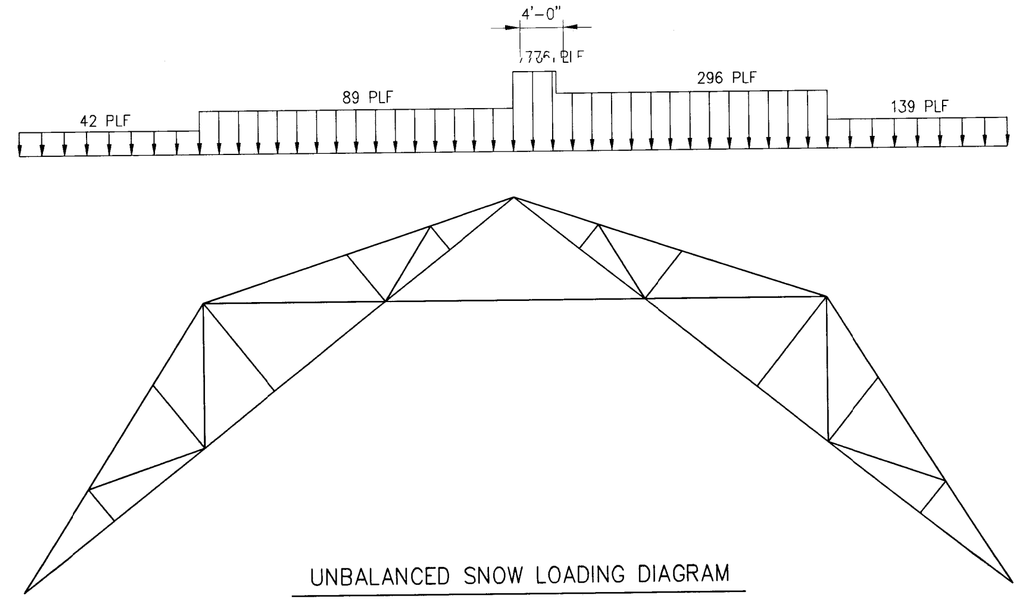

UNBALANCED SNOW LOADING DIAGRAM

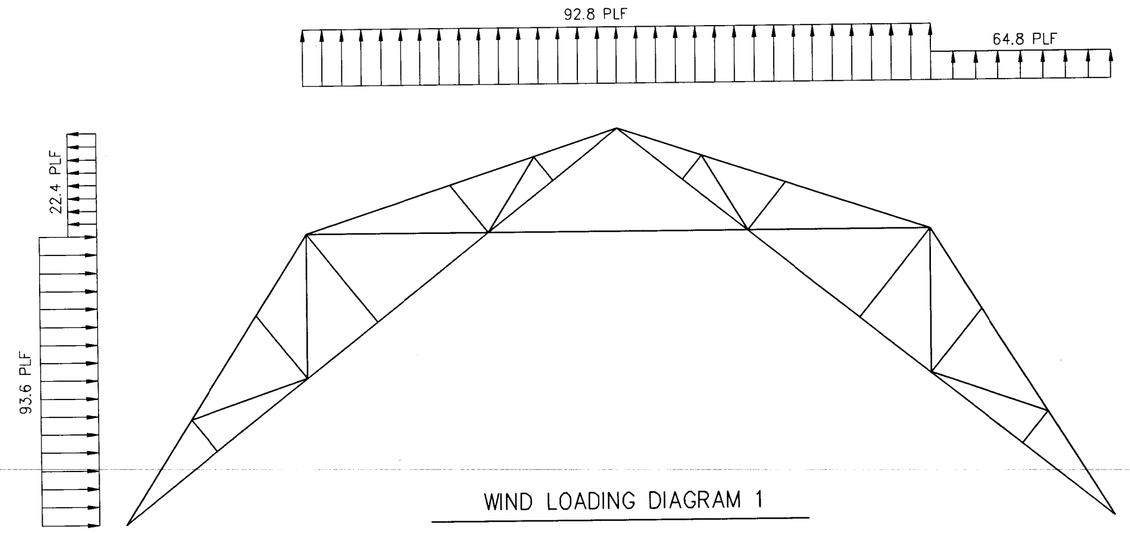

WIND LOADING DIAGRAM 1

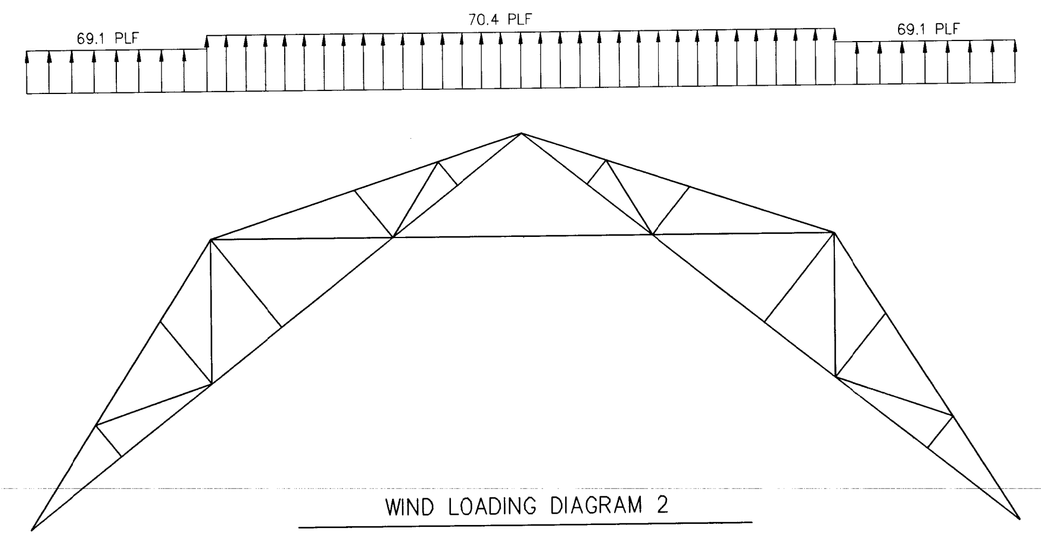

WIND LOADING DIAGRAM 2

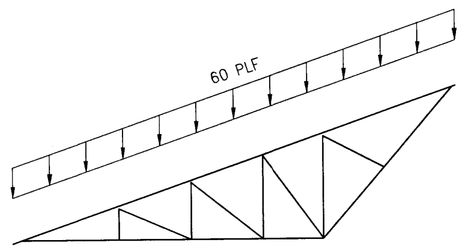

NOTE: LOADS DO NOT INCLUDE SELF WEIGHT OF TRUSS, TRUSS MANUFACTURER SHALL INCLUDE TRUSS SELF WEIGHT IN TRUSS DESIGN.

DEAD LOAD LOADING DIAGRAM

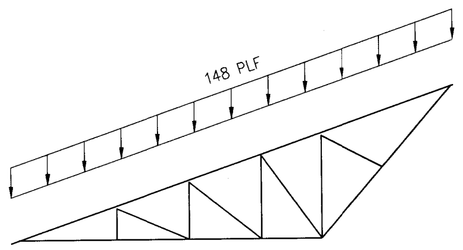

SNOW LOADING DIAGRAM

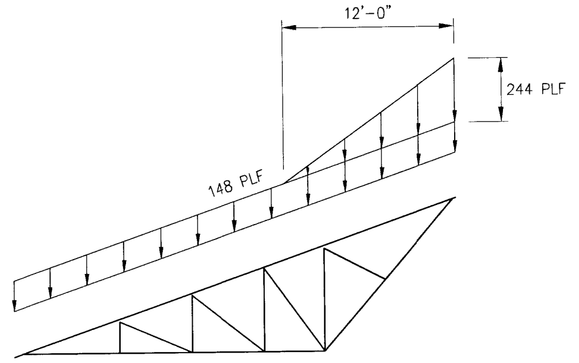

SNOW DRIFT LOADING DIAGRAM

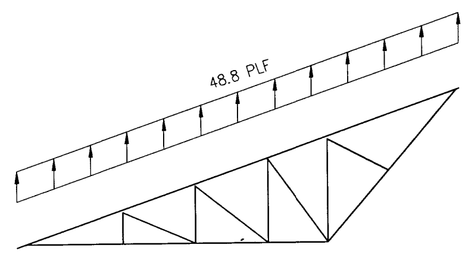

WIND LOADING DIAGRAM 1

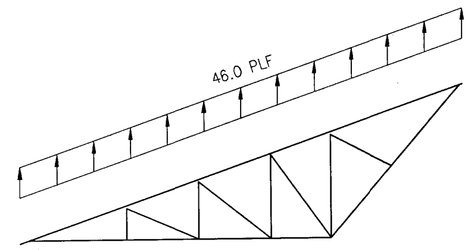

WIND LOADING DIAGRAM 2

Dankers Structural Consulting LLC
DSC
16 Kenney Road
Medfield, MA 02052
p) (508) 359-4075
f) (508) 942-9644

COMMONWEALTH OF MASSACHUSETTS
IMANTS DANKERS STRUCTURAL No. 33689
REGISTERED PROFESSIONAL ENGINEER
4/9/12

DRAWN: ID
CHECKED: ID
SCALE: AS NOTED
DATE: 03/26/12
ISSUED FOR PERMIT AND CONSTRUCTION

SALT STORAGE SHED
ACTON DPW FACILITY
ACTON, MA

TRUSS LOADING DIAGRAMS

PROJECT NO.
11067

DRAWING
S3

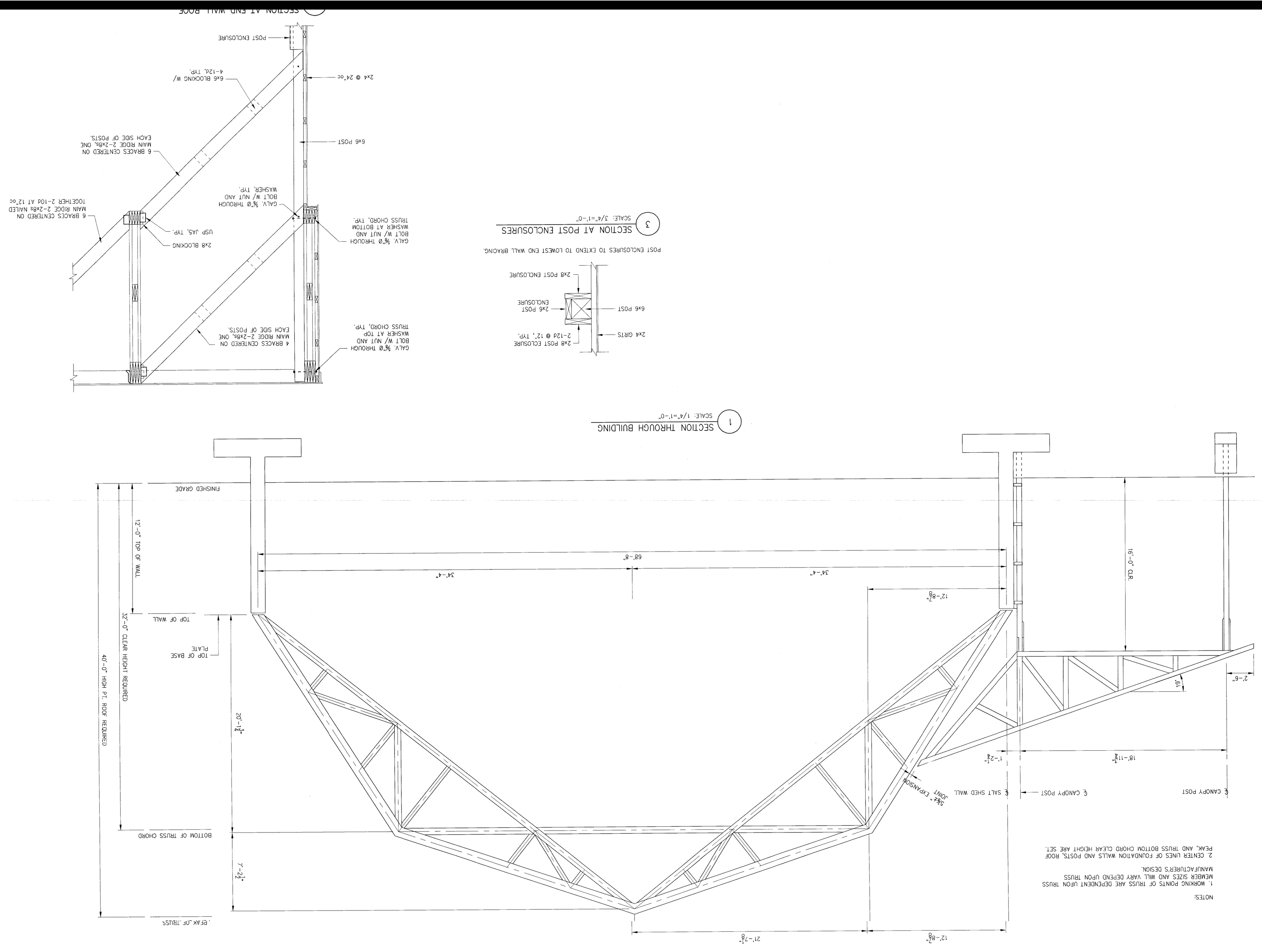

NOTES:

1. WORKING POINTS OF TRUSS ARE DEPENDENT UPON TRUSS MEMBER SIZES AND WILL VARY DEPEND UPON TRUSS MANUFACTURER'S DESIGN.
2. CENTER LINES OF FOUNDATION WALLS AND POSTS, ROOF PEAK, AND TRUSS BOTTOM CHORD CLEAR HEIGHT ARE SET.

DRAWING S4

PROJECT NO. 11067

BUILDING SECTIONS

SALT STORAGE SHED
ACTON DPW FACILITY
ACTON, MA

DRAWN: ID
CHECKED: ID
SCALE: AS NOTED
DATE: 03/26/12
ISSUED FOR PERMIT AND CONSTRUCTION

COMMONWEALTH OF MASSACHUSETTS
IMANTS DANKERS STRUCTURAL No. 30689
REGISTERED PROFESSIONAL ENGINEER

4/9/12

Dankers Structural Consulting LLC
DSC
16 Kenney Road
Medfield, MA 02052
p) (508) 359-4075
f) (508) 242-9644

ARCHITECTURAL REFERENCE

ABBREVIATIONS

&	AND
∠	ANGLE
@	AT
℄	CENTERLINE
Ø	DIAMETER
#	NUMBER
±	PLUS OR MINUS
AFF	ABOVE FINISHED FLOOR
AT / ACT	ACOUSTICAL CEILING TILE
ADDN.	ADDITION
ADJ.	ADJUSTABLE
A/C	AIR CONDITIONING
AHU	AIR HANDLING UNIT
ALT.	ALTERNATE
AL./ALUM.	ALUMINUM
AB	ANCHOR BOLT
APPROX.	APPROXIMATE(LY)
ARCH.	ARCHITECT(URAL)
AN	AS NOTED
ASB.	ASBESTOS
ASPH.	ASPHALT
ASSY	ASSEMBLY
ASST.	ASSISTANT
AUTO.	AUTOMATIC
BET.	BETWEEN
BIT.	BITUMINOUS
BLK(G)	BLOCK(ING)
BLDG	BUILDING
BR(K)	BRICK
BEJ	BRICK EXPANSION JOINT
BD	BOARD
BOT	BOTTOM
CPT	CARPET
CLG	CEILING
CT	CERAMIC TILE
C	CHANNEL
CW	CHILLED WATER
CLR	CLEAR
CONF.	CONFERENCE
COL.	COLUMN
CONC.	CONCRETE
CMU	CONCRETE MASONRY UNIT
CONST.	CONSTRUCTION
CONT.	CONTINUE/CONTINUOUS
CJ	CONTROL JOINT
CORR.	CORRIDOR
DEG.	DEGREE
DEPT.	DEPARTMENT
D	DEPTH
DET.	DETAIL
DIA.	DIAMETER
DIM(S).	DIMENSION(S)
DIST.	DISTANCE
DR	DOOR
DH	DOUBLE HUNG
DN	DOWN
DWG	DRAWING
EA.	EACH
ELEC.	ELECTRIC(AL)
EWC	ELECTRIC WATER COOLER
EL./ELEV.	ELEVATION
EPPT	EPOXY PAINT
EQ.	EQUAL
EQUIP.	EQUIPMENT
EXIST.	EXISTING
EXP. JT(EJ)	EXPANSION JOINT
EXT.	EXTERIOR
EIFS	EXT. INSUL. AND FINISH SYSTEM
ETR	EXISTING TO REMAIN
FOS	FACE OF STUD
FOW	FACE OF WALL
FF	FACTORY FINISH
FV	FIELD VERIFY
FIN.	FINISH(ED)
FFE	FINISH FLOOR ELEVATION
FEC	FIRE EXTINGUISHER CABINET
FL.	FLOOR
FNDTN	FOUNDATION
FR.	FROM
GA.	GAUGE
GALV.	GALVANIZED
G	GAS
GBMR	MOISTURE RESISTANT WALLBOARD
GC	GENERAL CONTRACTOR
GL.	GLASS(GLAZING)
GWB	GYPSUM WALL BOARD
HCP/HCAP	HANDICAPPED
HP	HIGH POINT
HR	HANDRAIL
HVAC	HEATING, VENTILATING AND AIR CONDITIONING
HT(H)	HEIGHT(HIGH)
H.M.	HOLLOW METAL
HORIZ.	HORIZONTAL
INCL.	INCLUDE(D)
INFO.	INFORMATION
ID	INSIDE DIAMETER
INSUL.	INSULATE(D)(ION)
INT.	INTERIOR
JT	JOINT
KP	KICK PLATE
LAB.	LABORATORY
LF	LABORATORY FURNITURE
L	LENGTH
MACH.	MACHINE
MFR	MANUFACTURER
MO	MASONRY OPENING
MAT./MATL.	MATERIAL
MAX.	MAXIMUM
MECH.	MECHANICAL
MDF	MEDIUM DENSITY FIBER BOARD
MTL/MET.	METAL
MS	METAL STUD
MIN.	MINIMUM
MISC.	MISCELLANEOUS
NIC	NOT IN CONTRACT
NTS	NOT TO SCALE
NO.	NUMBER
OC	ON CENTER
OPNG	OPENING
OPGS	OPEN GRID SUSPENSION SYSTEM
OPP.	OPPOSITE
OH	OPPOSITE HAND
OD	OUTSIDE DIAMETER
OFOI	OWNER FURNISHED, OWNER INSTALLED
OSF	OFFICE SYSTEMS FURNITURE
PT	PAINT
PR	PAIR
PART.	PARTITION
PLSTR	PLASTER
P. LAM.	PLASTIC LAMINATE
PL.	PLATE
PLYWD	PLYWOOD
PM	PRESSED METAL
PTW	PRESSURE TREATED WOOD
QTY	QUANTITY
QT	QUARRY TILE
R	RADIUS
REF.	REFERENCE
RCP	REFLECTED CEILING PLAN
REINF.	REINFORCE(D)(ING)
RB	RESILIENT BASE
RT	RESILIENT TILE
RIS.	RISER
RD	ROOF DRAIN
RM	ROOM
RO	ROUGH OPENING
SCHED.	SCHEDULE
SLR	SEALER
SECT.	SECTION
SJ	SEISMIC JOINT
SHT	SHEET
SIM.	SIMILAR
SPECS.	SPECIFICATIONS
SF	SQUARE FEET(FOOT)
SS	STAINLESS STEEL
STD	STANDARD
STL	STEEL
STOR.	STORAGE
STRUCT.	STRUCTURAL
TO	TOP OF
TOS	TOP OF STEEL
TR.	TREAD
TS	TUBULAR STEEL
TYP.	TYPICAL
VTR	VENT THROUGH ROOF
VERT.	VERTICAL
VEST.	VESTIBULE
VCT	VINYL COMPOSITION TILE
W	WIDTH
W/	WITH
W/O	WITHOUT
WD	WOOD
WDP	WOOD PANELING
WP	WATERPROOFING

WALL TYPES

SYMBOL LEGEND

- A — COLUMN LINE
- CONC WALL
- CMU WALL
- BRICK WALL
- STUD WALL
- FEC — FIRE EXTINGUISHER CABINET
- FEB — FIRE EXTINGUISHER BRACKET MOUNTED
- DOOR
- LIMIT OF WORK
- DEMOLTION
- 0001 — DOOR NO.
- ROOM NAME / 001 — ROOM IDENTIFICATION / ROOM NO.
- A — WALLTYPE
- E — EX. WALL
- L — WINDOW TYPE
- TA-00 — TOILET ACCESSORY
- 5'-0" DIAMETER TURNING RADIUS
- BUILDING ELEVATION
- A — ELEVATION NUMBER / INTERIOR ELEVATIONS / SHEET NUMBER
- 1 / A-1 — DETAIL NO. / SECTION / SHEET NO.
- 1 / A-1 — DETAIL NO. / ENLARGED DETAIL / SHEET NO.
- DTLNAME / SCALE : 1"=1'-0" / 01 — DETAIL NAME / DETAIL NO. / DETAIL/DRAWING TITLEBLOCK / CADD FILE NO. / SCALE

CEILING LEGEND

NOTES

CEILING PLANS SHOW LOCATION OF PRINCIPAL ITEMS OF MECHANICAL AND ELECTRICAL EQUIPMENT TO BE INSTALLED AT CEILING AS RELATED TO ACOUSTICL TILE/PANEL JOINTS/GRIDS. ALL ITEMS OF EQUIPMENT ARE NOT NECCESSARILY LOCATED ON CEILING PLANS-CONSULT MECHANICAL, ELECTRICAL, AND FIRE PROTECTION DRAWINGS FOR COMPLETE SCOPE OF WORK. ALL EQUIPMENT TO BE LOCATED IN CENTER OF ACOUSTICAL TILE UNLESS OTHERWISE NOTED.

MATERIAL

- 2'x2' ACOUSTICAL TILE CEILING
- 2'x4' ACOUSTICAL TILE CEILING
- GWB CEILING OR SOFFIT
- AP — ACCESS PANEL IN GWB CEILING OR SOFFIT
- 8'-0" — CEILING HEIGHT

LIGHTING

- 2'x2' RECESSED LIGHT FIXTURE
- 2'x4' RECESSED LIGHT FIXTURE
- 1'x4' PENDANT LIGHT FIXTURE

MECHANICAL

- SUPPLY AIR DIFFUSER
- RETURN AIR DIFFUSER
- LINEAR SLOT AIR DIFFUSER
- SIDEWALL SLOT AIR DIFFUSER
- SPRINKLER HEAD
- EXISTING SPRINKLER HEAD
- SIDEWALL SPRINKLER HEAD

ELECTRICAL

- EXIT SIGN
- S — SPEAKER
- SD — SMOKE DETECTOR
- HD — HEAT DETECTOR
- EMERGENCY LIGHT
- D — POWER DROP TO FURNITURE
- R — RELOCATE EXISTING EQUIPMENT IN CEILING TO LOCATION SHOWN
- R — RELOCATED 2'x2' RECESSED LIGHT FIXTURE
- R — RELOCATED 2'x4' RECESSED LIGHT FIXTURE

GENERAL PROJECT NOTES:

DRAWING LIST

GENERAL
G0.0 TITLE SHEET

SITE

STRUCTURAL
S0 NOTES
S-1 FOUNDATION PLAN, SECTION AND DETAILS
S-2 ROOF PLAN, SECTION AND DETAILS
S-3 TRUSS LOADING DIAGRAMS
S-4 BUILDING SECTIONS

ARCHITECTURAL
A0.0 REFERENCE SHEET AND DRAWING LIST
A1.1 FLOOR PLANS AND DETAILS
A1.2 ROOF PLAN AND SPECIFICATIONS
A2.1 BUILDING ELEVATIONS
A3.1 BUILDING SECTION AND DETAILS

HVAC

PLUMBING

FIRE PROTECTION

ELECTRICAL

DYMAXAEON

REV	DATE	DESCRIPTION
0	03/26/12	ISSUED FOR PERMIT AND CONSTRUCTION

Donkers Structural Consulting LLC
DSC
16 Kenney Road, Medfield, MA 02052
p) (508) 359-4075
f) (508) 242-9644

TOWN OF ACTON SALT SHED
14 FOREST ROAD
ACTON, MA

REFERENCE SHEET AND DRAWING LIST

DYMAXAEON
SUSTAINABLE DESIGN & CONSULTING
247 River Street, Waltham, MA 02453
P 617.947.1347 www.dymaxaeon.com

DRAWN BY: EL
CHECKED BY: EL
CADD FILE: XPLT

REGISTERED ARCHITECT ERIC STEVEN LARSEN No. 20235 WALTHAM MA

DATE: 03/26/12
SCALE:

PROJECT NUMBER: 11067
DRAWING: A0.0

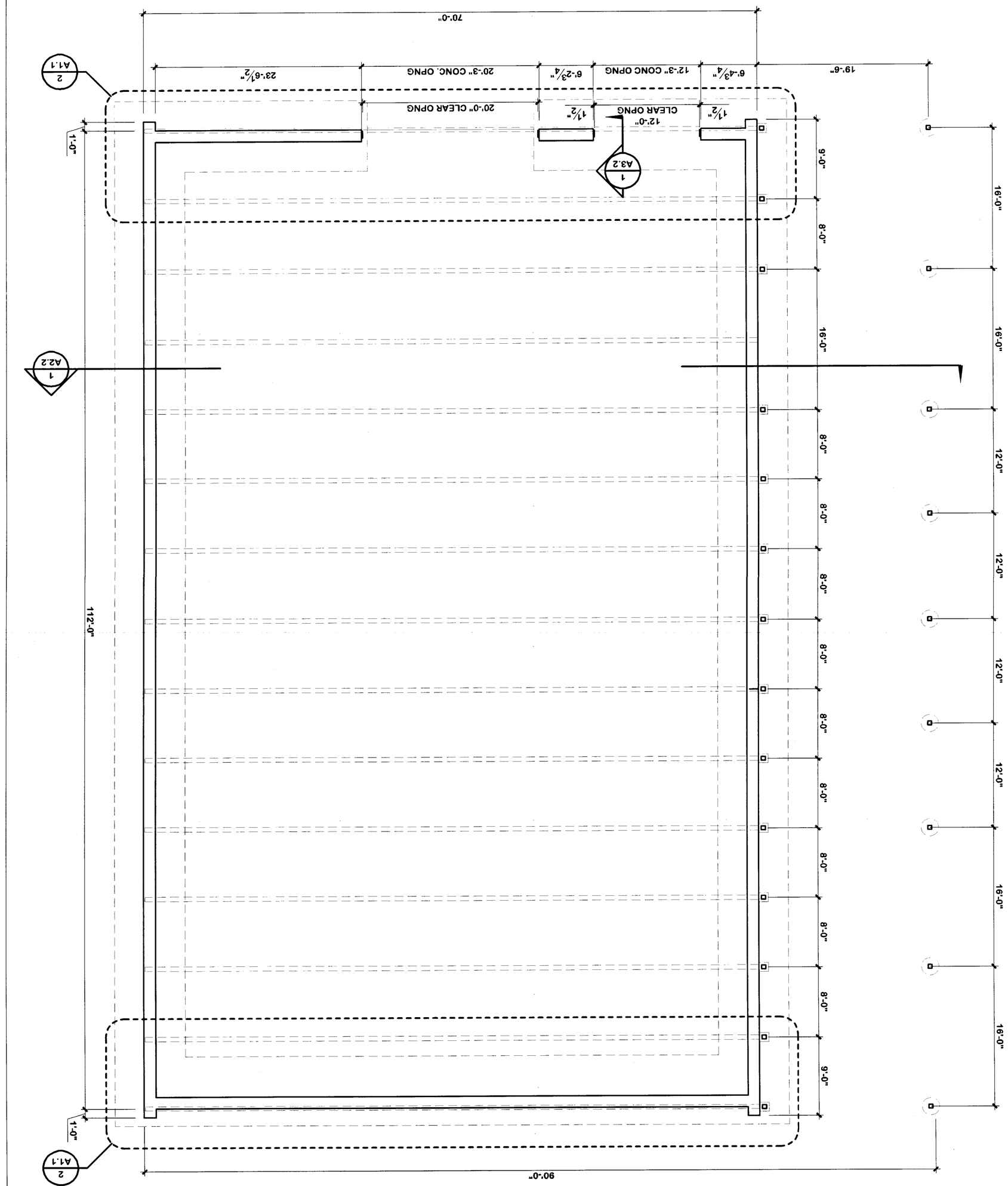

FLOOR PLAN
SCALE : 1/8" = 1'-0"
1 AP01

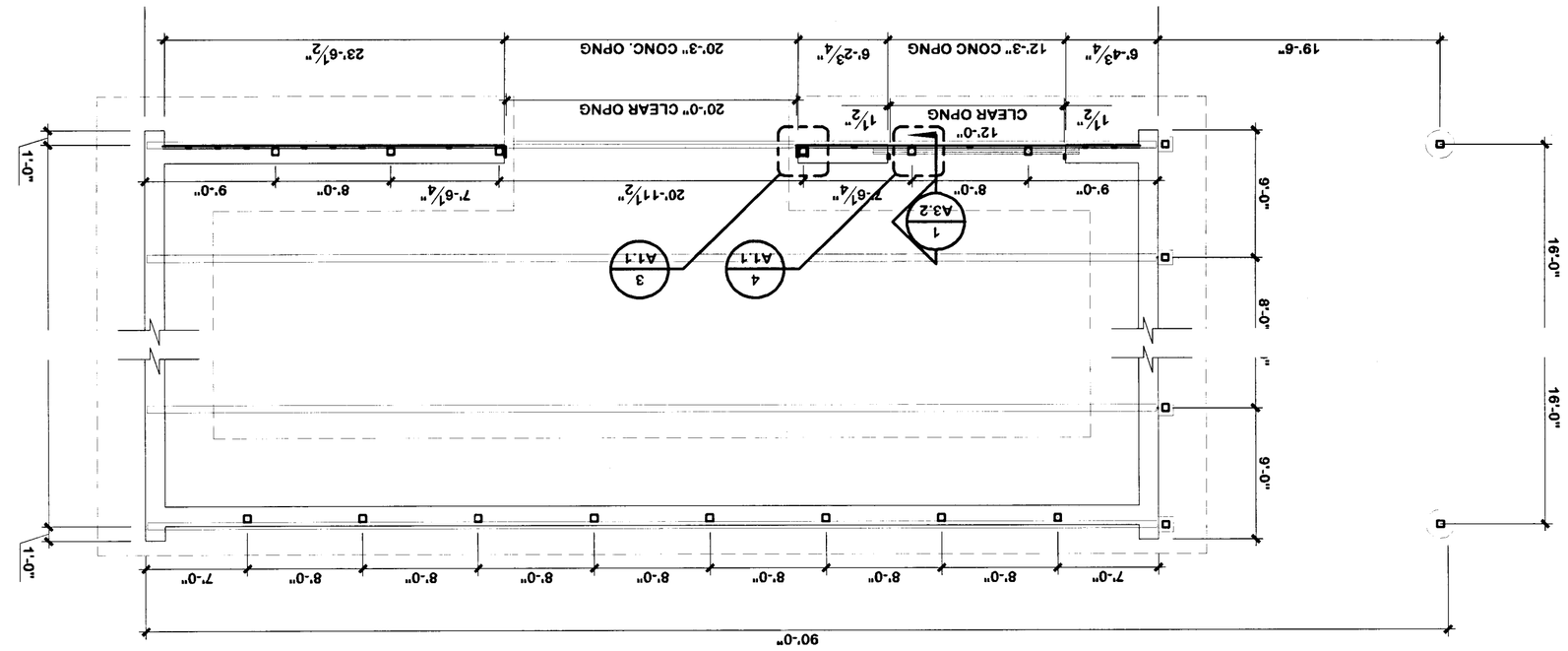

PLAN – END WALLS
SCALE : 1/8" = 1'-0"
2 AP01

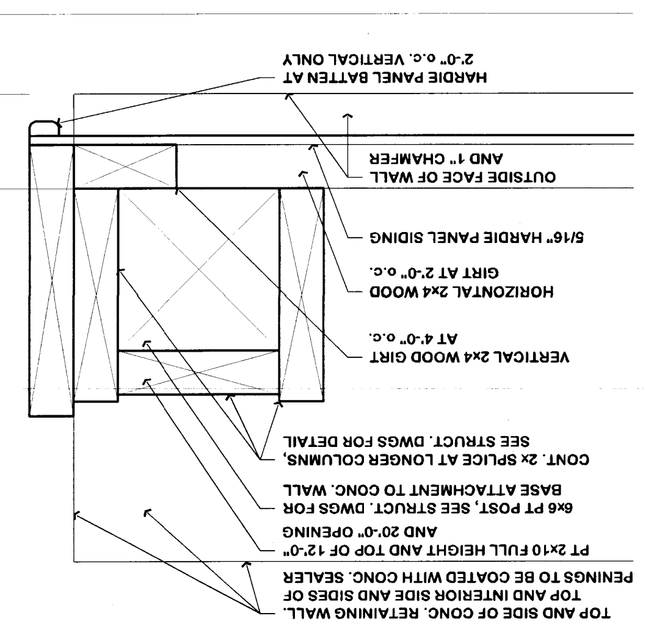

PLAN DETAIL – DOOR OPENING
SCALE : 3" = 1'-0"
3 AP02

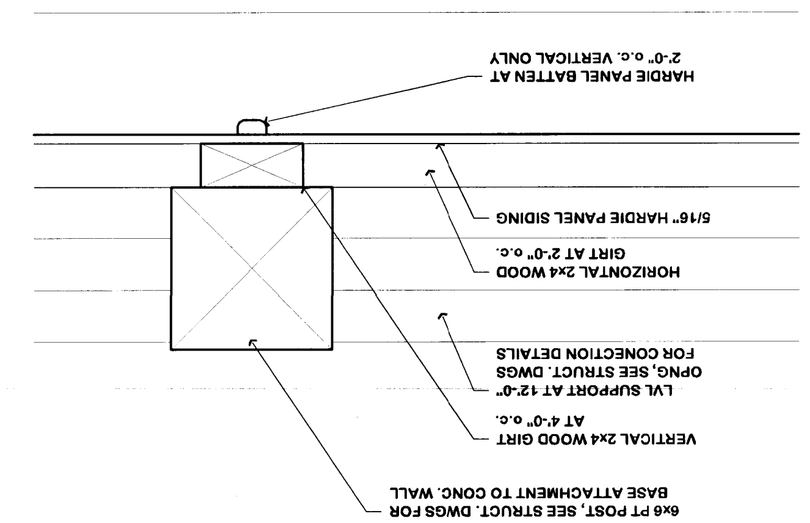

PLAN DETAIL – END WALL COLUMN
SCALE : 3" = 1'-0"
4 AP02

Dunkera Structural Consulting LLC
16 Kenney Road
Westfield, MA 02052
p) (508) 238-4075
f) (508) 242-9644

DSC

TOWN OF ACTON SALT SHED
14 FOREST ROAD
ACTON, MA

FLOOR PLANS AND DETAILS

DIMAXAEON
SUSTAINABLE DESIGN & CONSULTING
247 River Street, Waltham, MA 02453
P 617.947.1947 www.dimaxaeon.com

DRAWN BY	EL
CHECKED BY	EL
CADD FILE	
XPLT	
DATE	03/28/12
SCALE	
PROJECT NUMBER	41067
DRAWING	

REV	DATE	DESCRIPTION
0	09/28/12	ISSUED FOR PERMIT AND CONSTRUCTION

PLAN NORTH

DIMAXAEON

1. SKYLIGHT
 1.1. MANUFACTURER -
  1.1.1. H&F MANUFACTURING OR EQUAL
 1.2. PRODUCT -
  1.2.1. UNITREX POLYCARBONATE SKYLIGHT
  1.2.2. SIZE - 4.2" WIDE x 1 1/16" DEEP CORRUGATION, 42" WIDE PANEL
  1.2.3. THICKNESS - 1/16"
  1.2.4. COLOR - SOLAR CONTROL
  1.2.5. FASTENERS - CORROSION RESISTANCE

2. SIDING AND TRIM
 2.1. MANUFACTURER -
  2.1.1. JAMES HARDIE OR EQUAL
 2.2. PRODUCT - CEMENTITIUOUS PANELS AND BOARDS
  2.2.1. SIDING, FRONT ELEVATION - HARDIE PANEL SIDING - 4'x8' VERTICAL SHEETS, 5/16" THICK CEDARMILL FINISH WITH VERTICAL BATTENS AT JOINTS AND AT MIDPOINT OF PANELS, 2'-0" o.c.
  2.2.2. SIDING, REAR ELEVATION - HARDIE PANEL SIDING - 4'x8' VERTICAL SHEETS, 5/16" THICK SMOOTH FINISH WITH PVC H CHANNELS AT HORIZONTAL JOINTS, 4'-0" o.c.
  2.2.3. TRIM - HARDIE TRIM BOARDS
  2.2.4. FASTENERS - CORROSION RESISTANCE
  2.2.5. FOLLOW ALL MANUFACTURERS INSTALLATION GUIDELINES

3. ROOFING
 3.1. MANUFACTURER - OWENS CORNING OR EQUAL
 3.2. PRODUCT - ASPHALT ROOF SHINGLES
  3.2.1. DURATION ARCHITECTURAL LAMINATED ASPHALT SHINGLE
  3.2.2. 30 YEAR WARRANTY
  3.2.3. COLOR - TO BE DETERMINED
  3.2.4. FASTENERS - CORROSION RESISTANCE

4. COATINGS
 4.1. CONCRETE
  4.1.4. MANUFACTURER -
   4.1.4.1. RHOMAR OR EQUAL
  4.1.5. PRODUCT -
   4.1.5.1. MET-CON 3000
   4.1.5.2. APPLICATION AREA- INTERIOR OF SALT STORAGE AREA, FULL HEIGHT OF CONCRETE WALL, TOP OF WALL AND SIDES OF TWO MAIN OPENINGS
   4.1.5.3. FOLLOW ALL MANUFACTURERS INSTALLATION GUIDELINES
 4.2. SIDING
  4.2.1. MANUFACTURER -
   4.2.1.1. BENJAMIN MOORE OR EQUAL
  4.2.2. PRODUCT -
   4.2.2.1. Aura® Waterborne Exterior Paint Flat Finish 629
   4.2.2.2. Color - TBD

SPECIFICATIONS
SCALE :

2

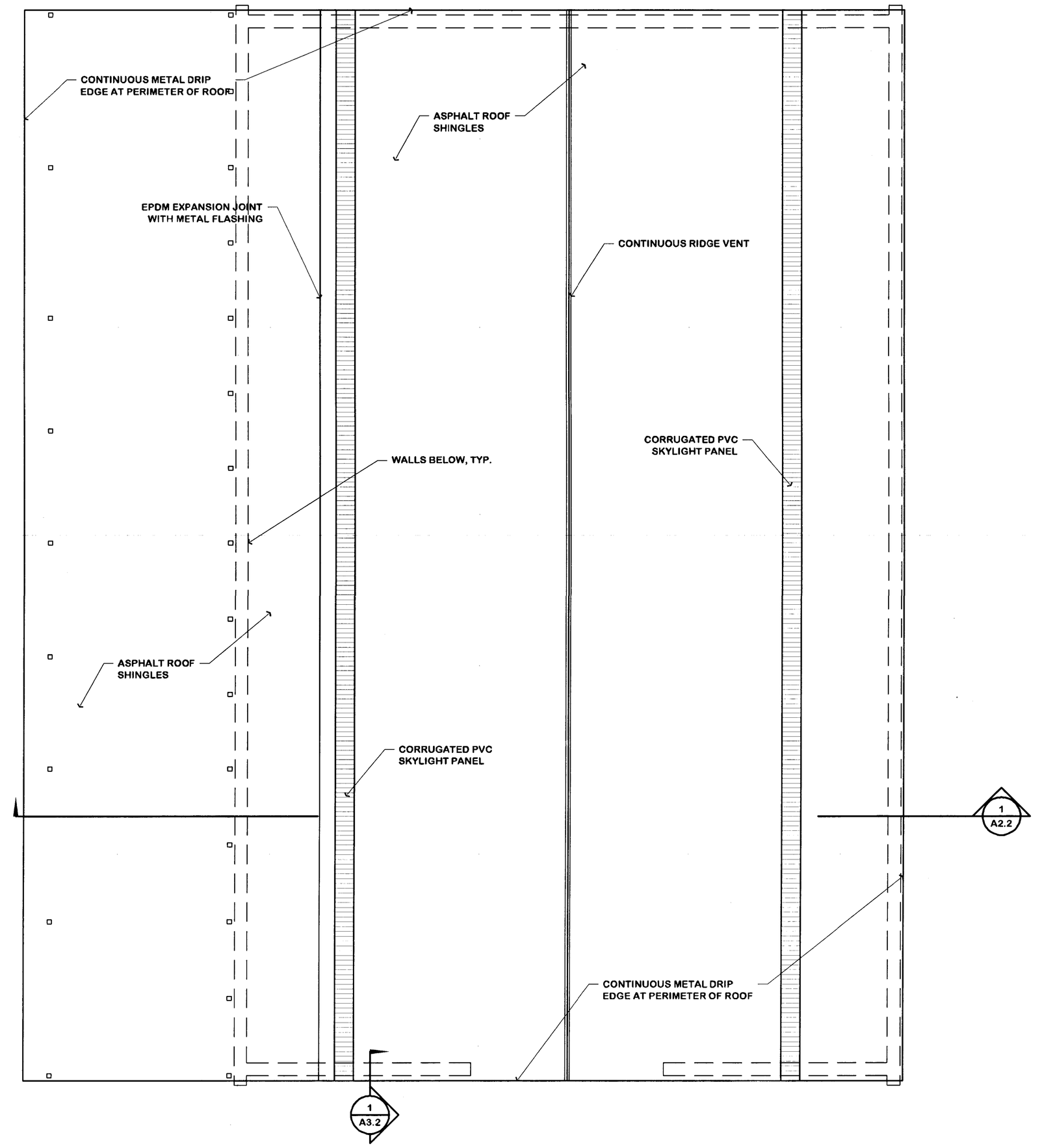

ROOF PLAN
SCALE : 1/8" = 1'-0"

AP03 1

DYMAXÆON

REV	DATE	DESCRIPTION
0	03/26/12	ISSUED FOR PERMIT AND CONSTRUCTION

PLAN NORTH

Dankers Structural Consulting LLC
DSC
16 Kenney Road, Medfield, MA 02052
p) (508) 359-9075
f) (508) 242-9644

TOWN OF ACTON SALT SHED
14 FOREST ROAD
ACTON, MA

ROOF PLAN AND SPECIFICATIONS

DYMAXÆON
SUSTAINABLE DESIGN & CONSULTING
247 River Street, Waltham, MA 02453
P.617.947.1347 www.dymaxaeon.com

DRAWN BY: EL
CHECKED BY: EL
CADD FILE: XPLT

COMMONWEALTH OF MASSACHUSETTS
STEVEN J. APFEL
No. 29055
WALTHAM
MA

DATE: 03/26/12
PROJECT NUMBER: 11067
DRAWING: A1.2
SCALE:

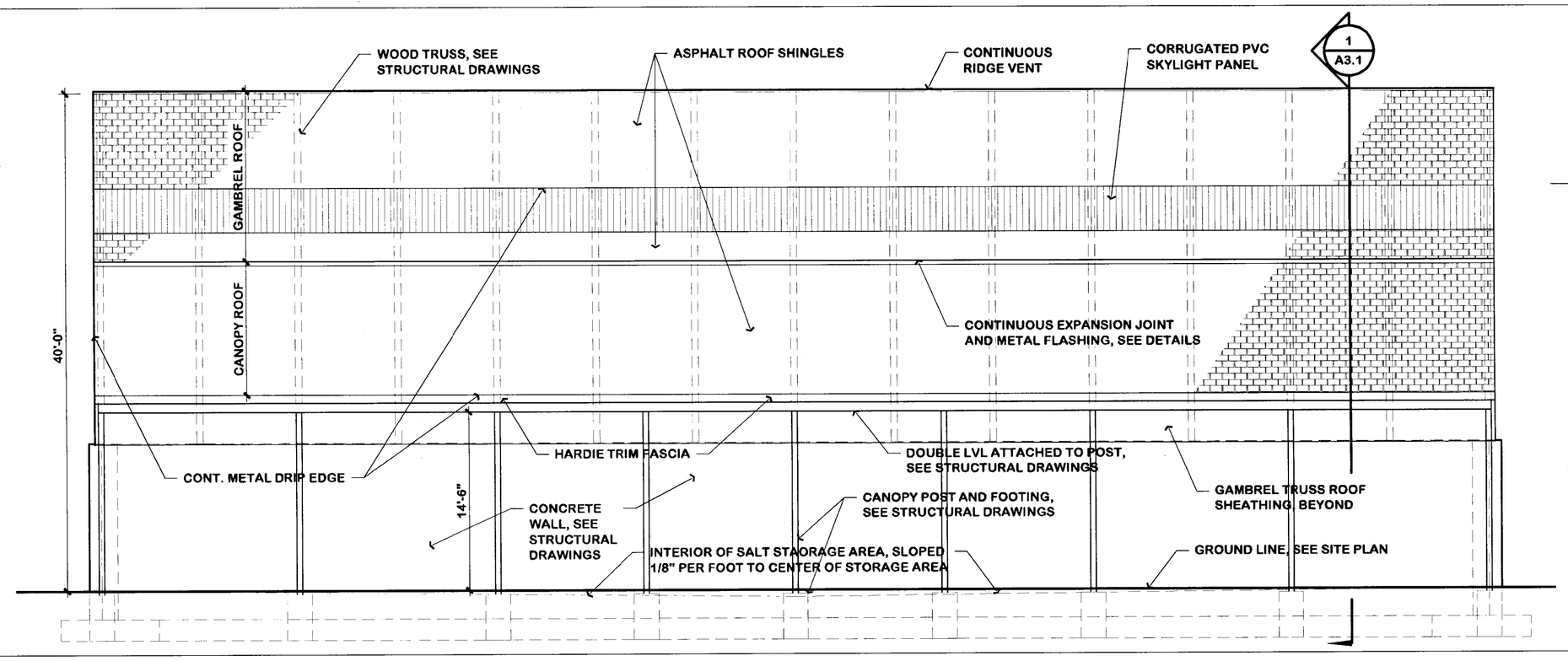

SOUTH ELEVATION
SCALE : 1/8" = 1'-0"

BE04 4

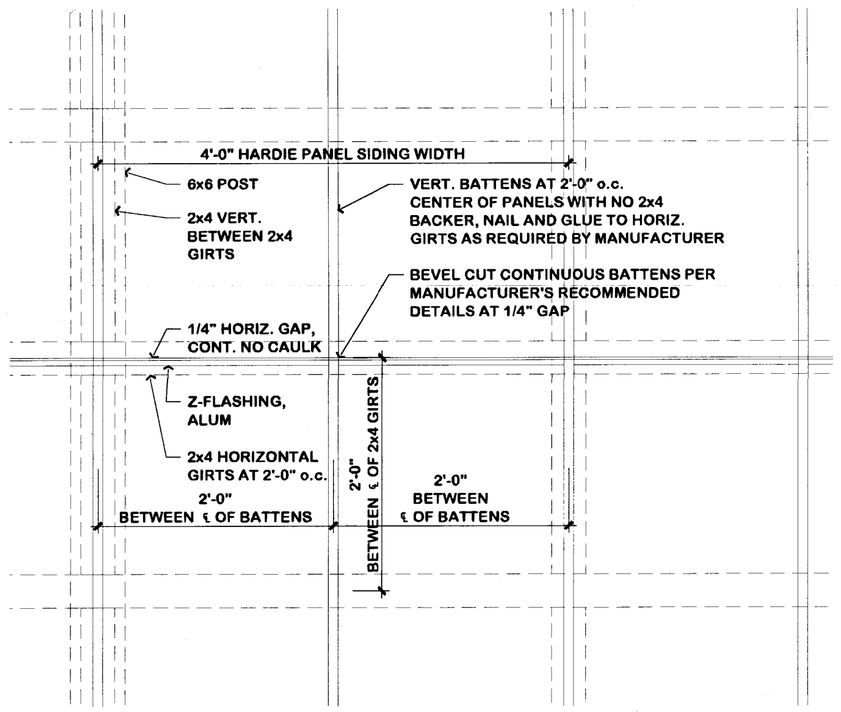

ELEVATION DETAIL – PANEL SIDING
SCALE : 1/2" = 1'-0"

BE01 5

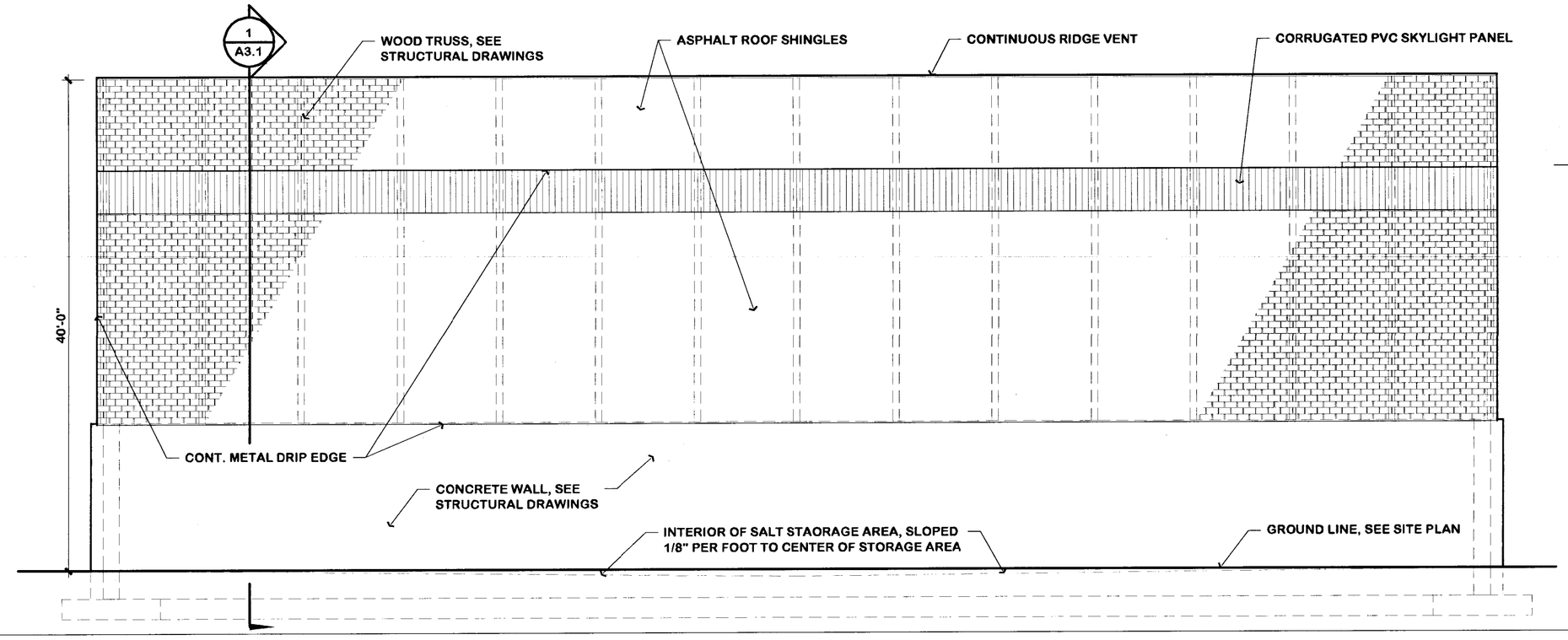

NORTH ELEVATION
SCALE : 1/8" = 1'-0"

BE03 3

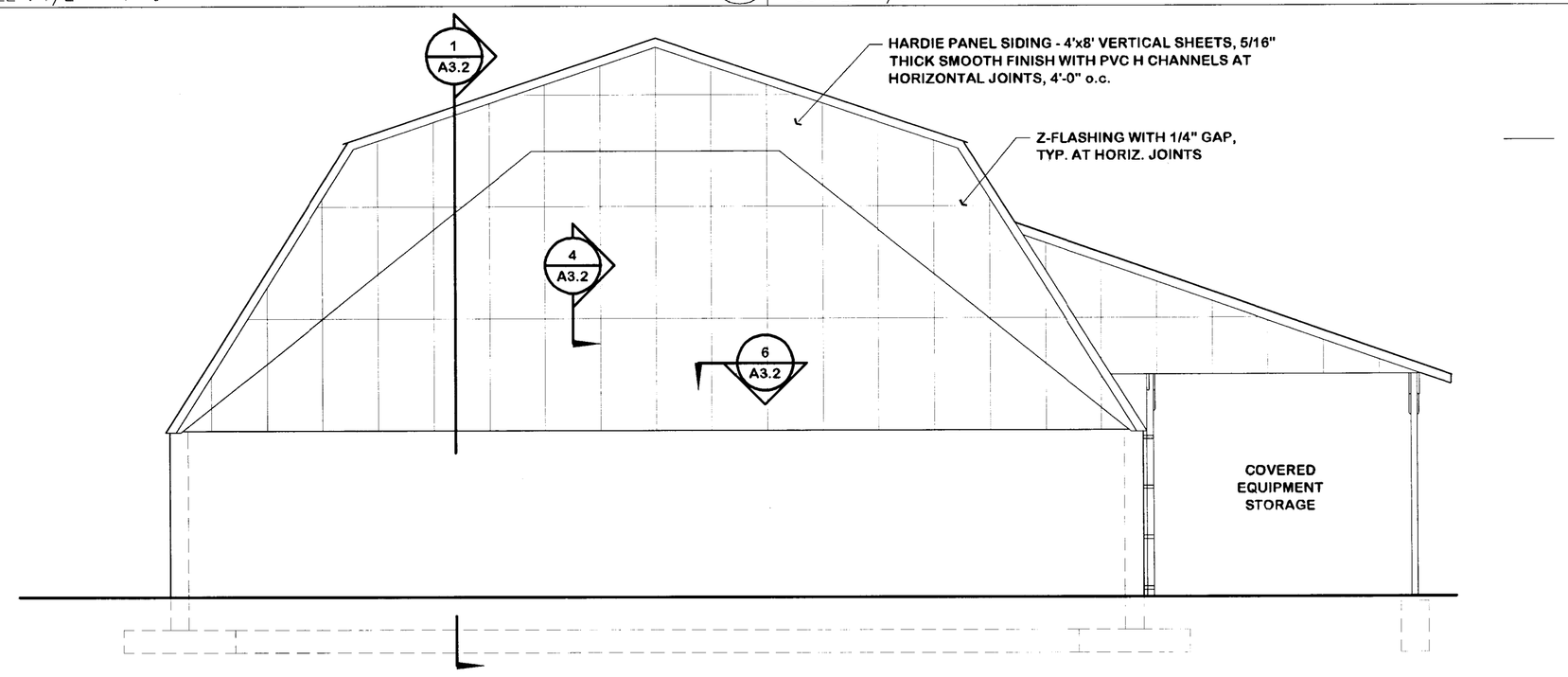

WEST ELEVATION
SCALE : 1/8" = 1'-0"

BE02 2

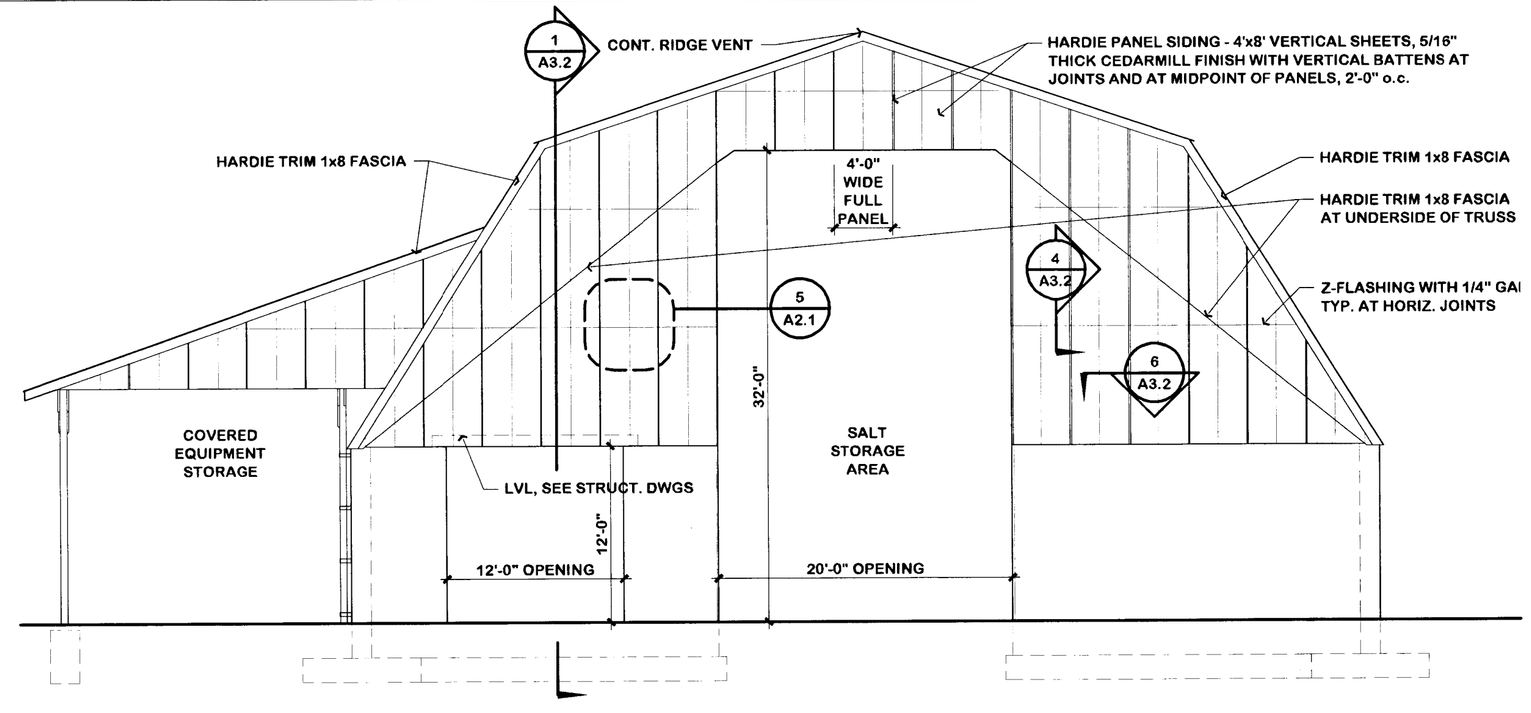

EAST ELEVATION
SCALE : 1/8" = 1'-0"

BE01 1

DYMAXAEON

REV	DATE	DESCRIPTION
0	03/26/12	ISSUED FOR PERMIT AND CONSTRUCTION

Dankers Structural Consulting LLC
DSC
16 Kenney Road, Medfield, MA 02052
p) (508) 359-4075
f) (508) 242-9644

TOWN OF ACTON SALT SHED
14 FOREST ROAD
ACTON, MA

BUILDING ELEVATIONS

DYMAXAEON
SUSTAINABLE DESIGN & CONSULTING
247 River Street, Waltham, MA 02453
P 617.947.1547 www.dymaxaeon.com

DRAWN BY: EL
CHECKED BY: EL
CADD FILE: XPLT

REGISTERED PROFESSIONAL ENGINEER STEVEN LARSEN No. 20235 WALTHAM MA

DATE: 03/26/12
SCALE:

PROJECT NUMBER: 11067
DRAWING: A2.1

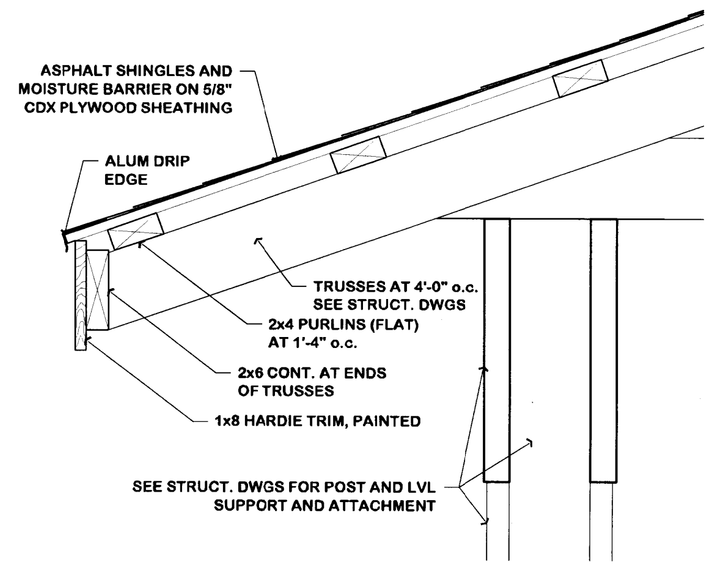

SECTION DETAIL – CANOPY ROOF EDGE
SCALE : 1 1/2" = 1'–0"
BS01/01a (5)

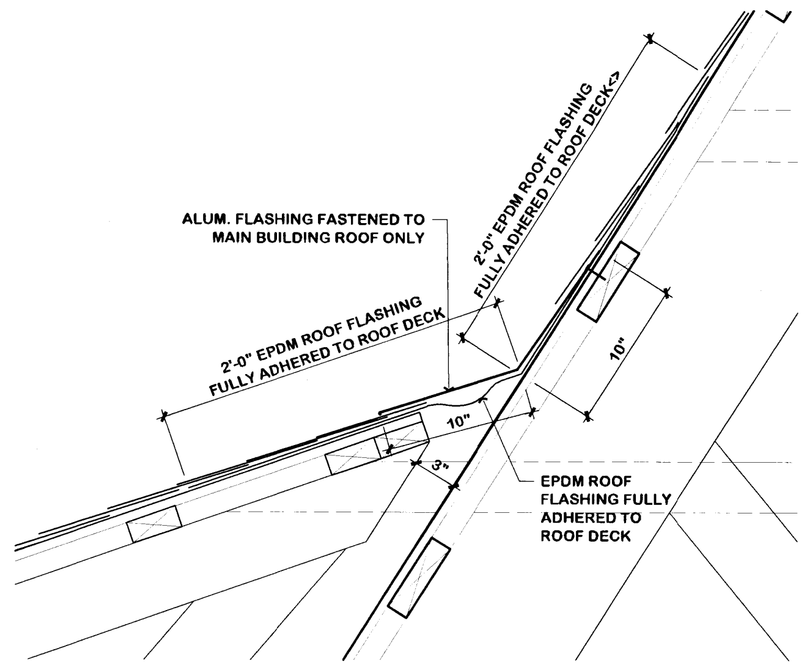

SECTION DETAIL – EXPANSION JOINT
SCALE : 1 1/2" = 1'–0"
BS01/01a (4)

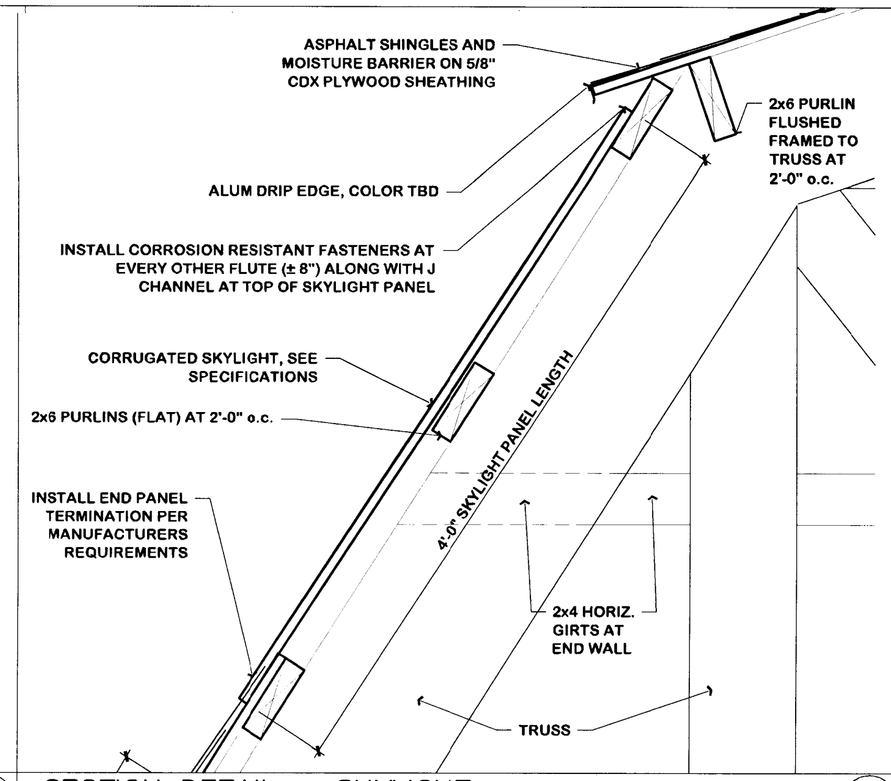

SECTION DETAIL – SKYLIGHT
SCALE : 1 1/2" = 1'–0"
BS01/01a (3)

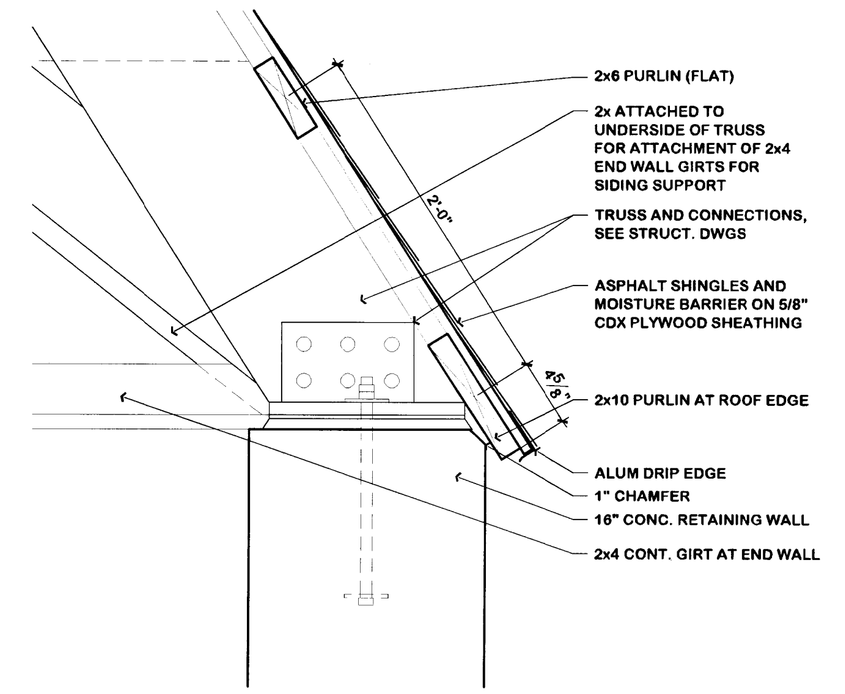

SECTION DETAIL – ROOF EDGE
SCALE : 1 1/2" = 1'–0"
BS01/01a (2)

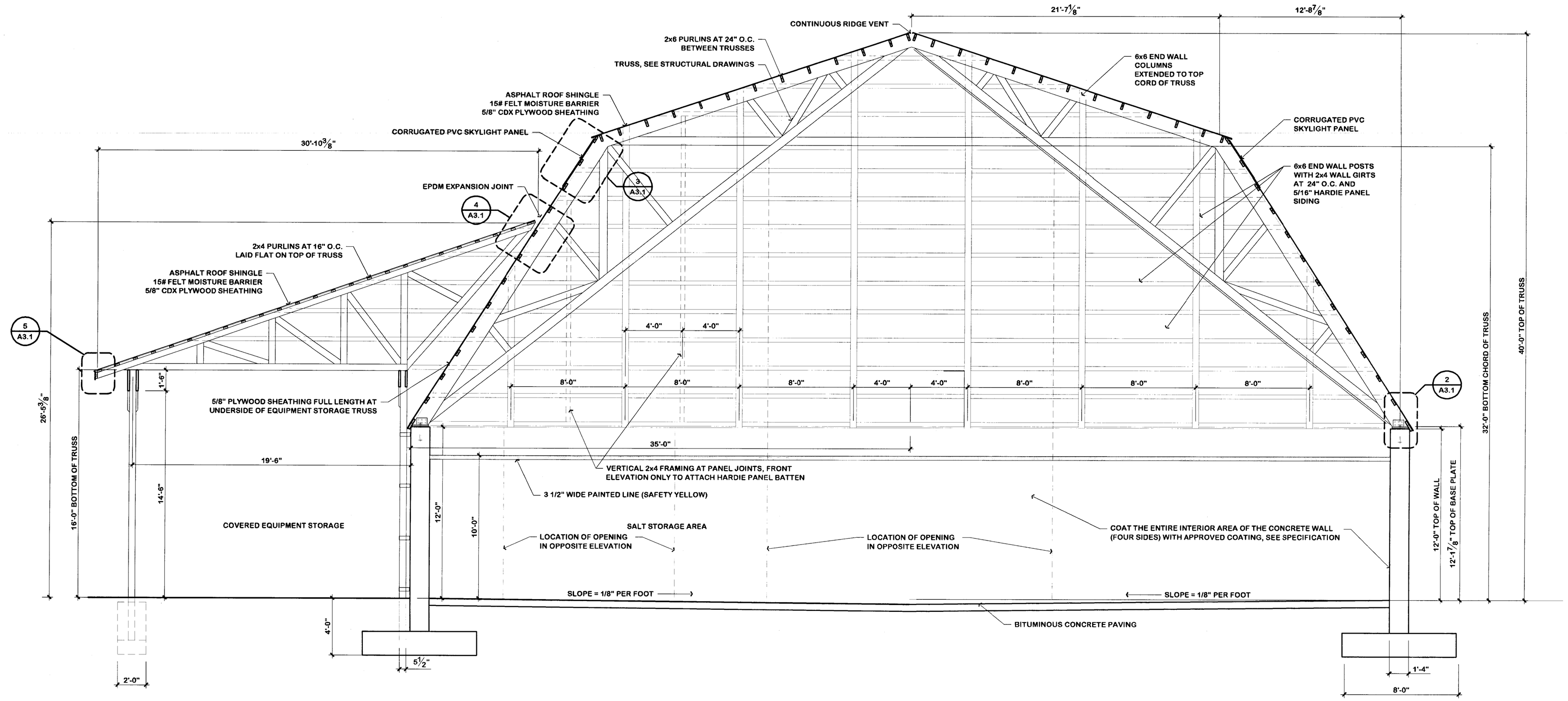

BUILDING SECTION
SCALE : 1/4" = 1'–0"
BS01 (1)

DYMAXAEON

REV	DATE	DESCRIPTION
0	03/26/12	ISSUED FOR PERMIT AND CONSTRUCTION

Dankers Structural Consulting LLC
DSC 16 Kenney Road Medfield, MA 02052
p) (508) 359-4075
f) (508) 242-9644

TOWN OF ACTON SALT SHED
14 FOREST ROAD
ACTON, MA

BUILDING SECTION AND DETAILS

DYMAXAEON
SUSTAINABLE DESIGN & CONSULTING
247 River Street, Waltham, MA 02453
P 617.947.1347 www.dymaxaeon.com

DRAWN BY: EL
CHECKED BY: EL
CADD FILE: XPLT

REGISTERED ARCHITECT ERIC STEVEN LARSEN No. 22335 WALTHAM MA

DATE: 03/26/12
PROJECT NUMBER: 11067
SCALE:
DRAWING: A3.1

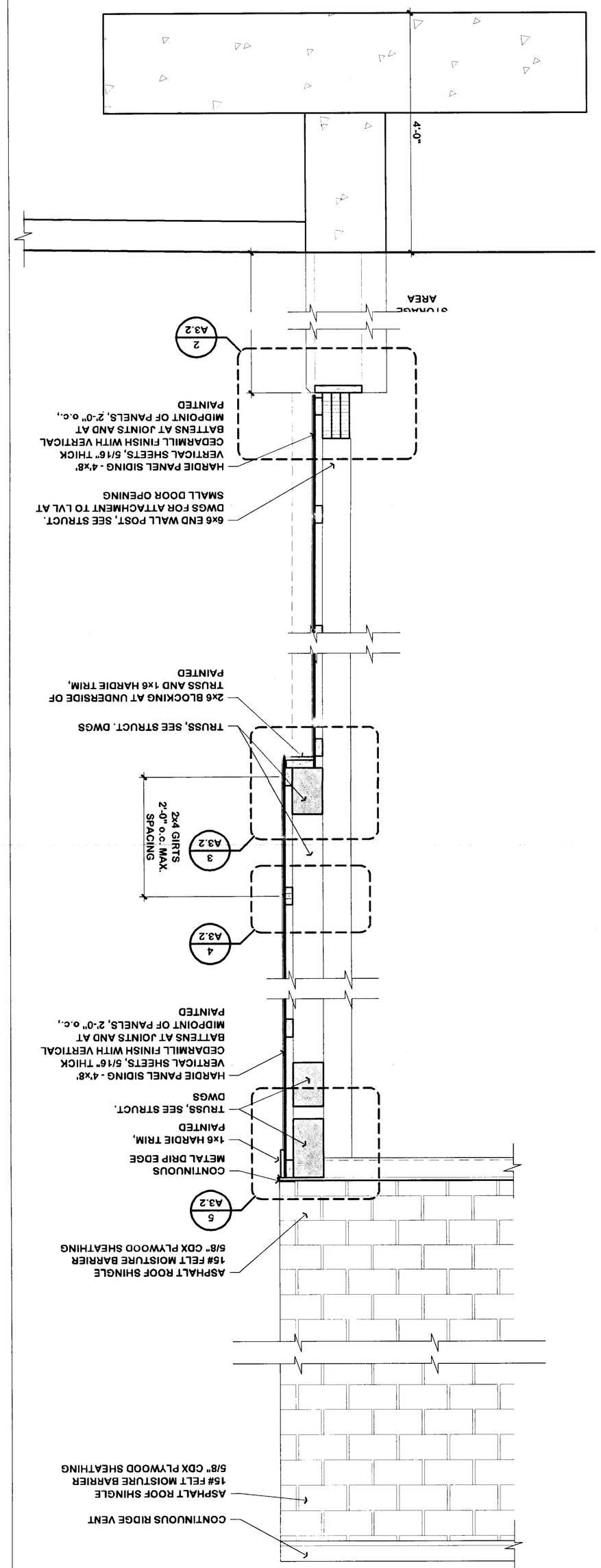

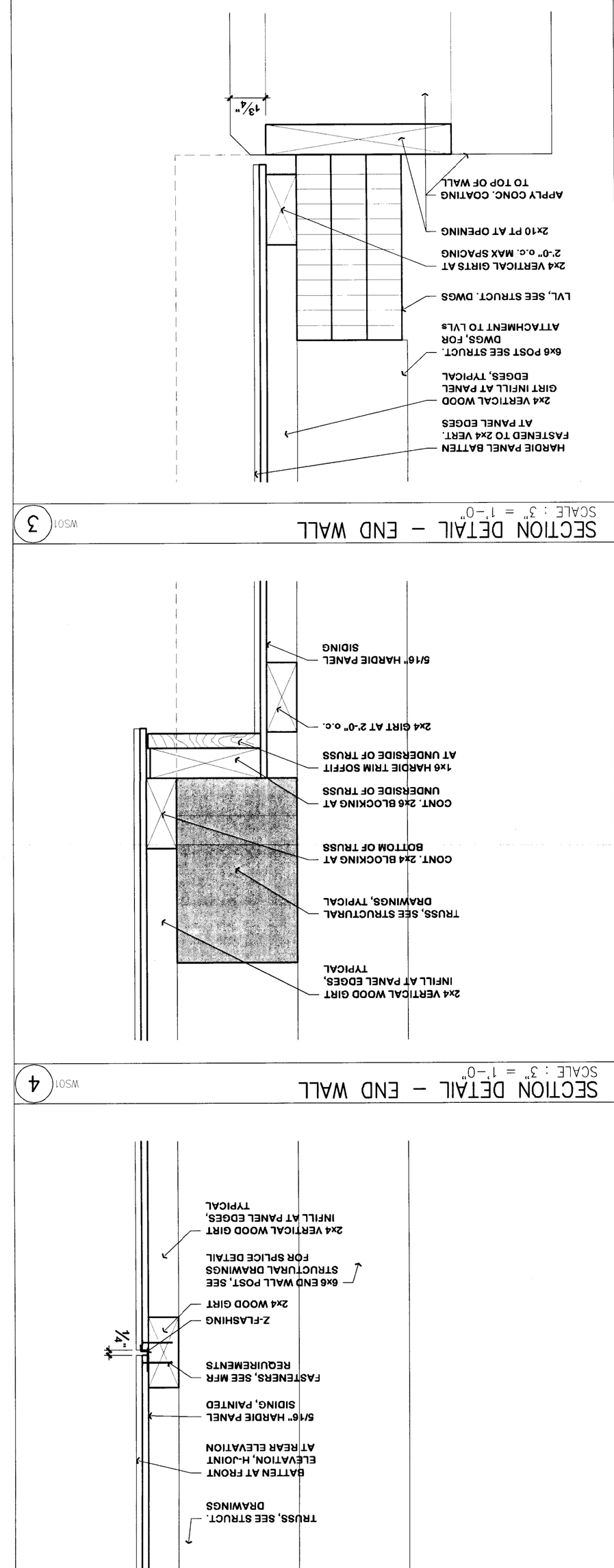

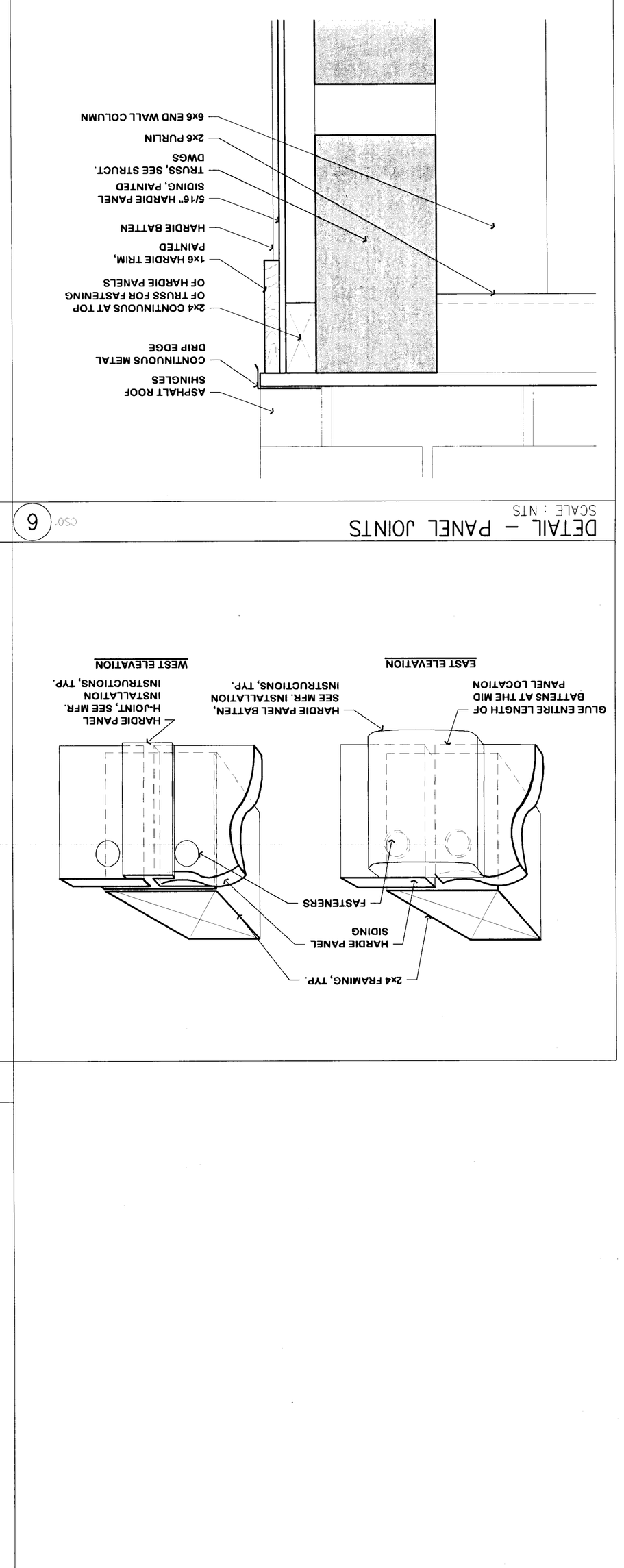

DIMAXAEON
SUSTAINABLE DESIGN & CONSULTING
247 River Street, Waltham, MA 02453
P 617.947.1347 www.dimaxaeon.com

DRAWN BY: EL
CHECKED BY: EL
CADD FILE
XPLT

DATE 03/26/12
SCALE
DRAWING A3.2
PROJECT NUMBER 11067

Dunkers Structural Consulting LLC
16 Kenney Road
Medfield, MA 02052
p) (508) 359-4075
f) (508) 242-9644

TOWN OF ACTON SALT SHED
14 FOREST ROAD
ACTON, MA

WALL SECTIONS AND DETAILS

REV	DATE	DESCRIPTION
0	03/26/12	ISSUED FOR PERMIT AND CONSTRUCTION

DIMAXAEON