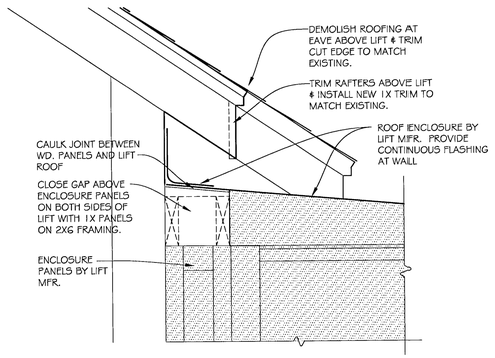

5 DETAIL AT ROOF

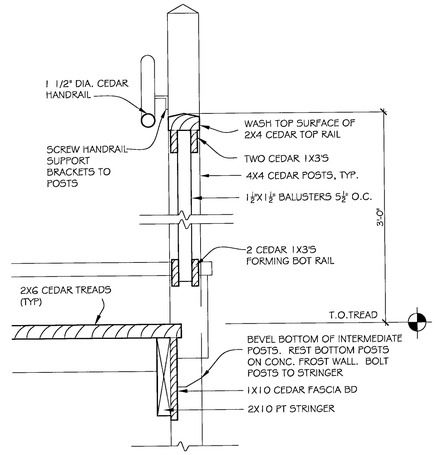

2 HANDDRAIL / STAIR FRAMING DETAIL

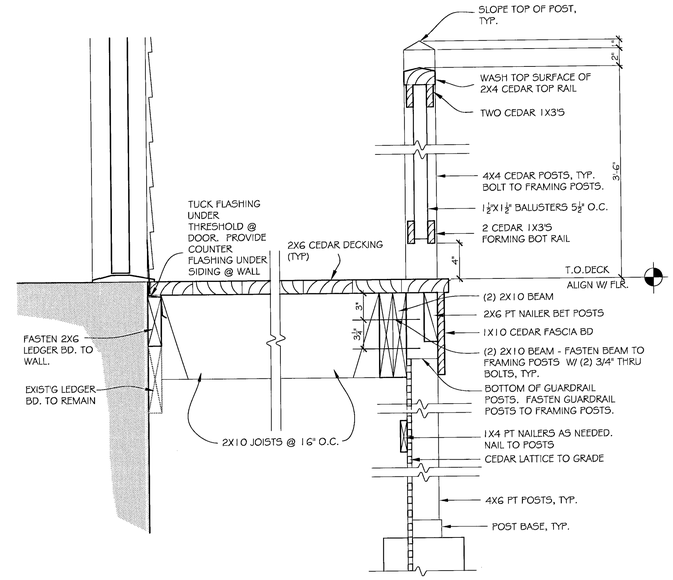

1 GUARDRAIL / DECK FRAMING DETAIL

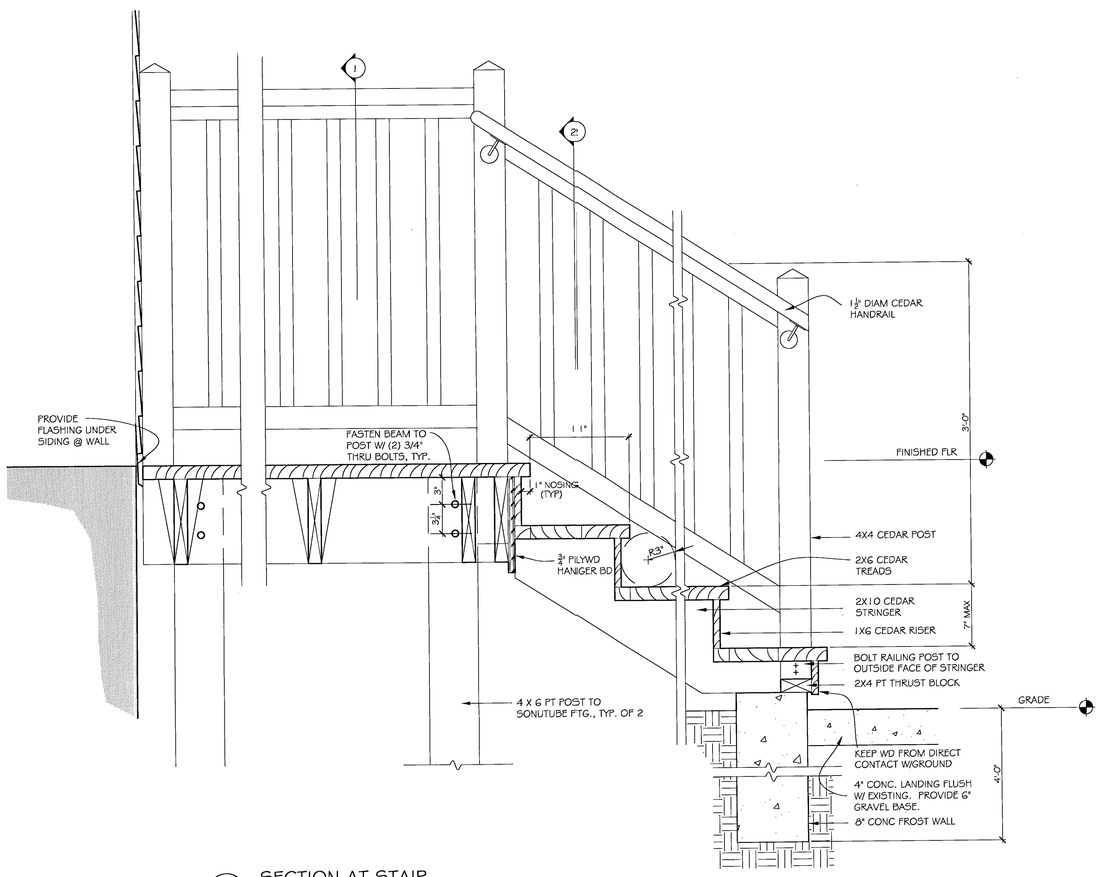

4 SECTION AT STAIR

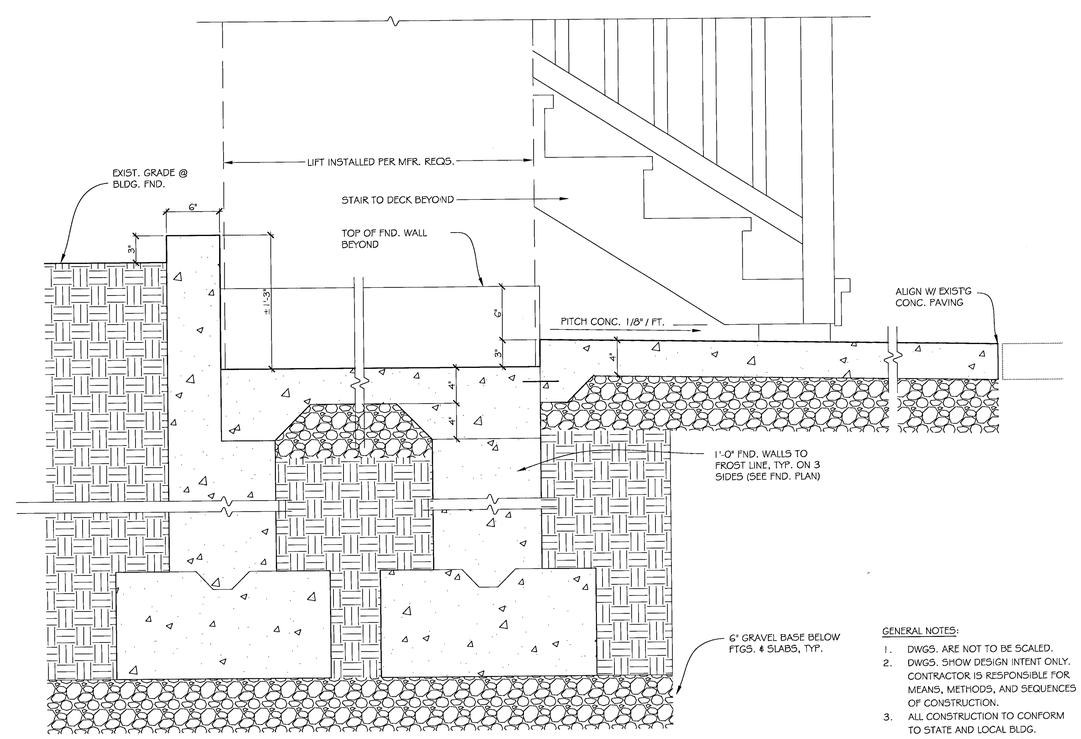

3 SECTION THRU SLAB & FOUNDATION

GENERAL NOTES:

1. DWGS. ARE NOT TO BE SCALED.
2. DWGS. SHOW DESIGN INTENT ONLY. CONTRACTOR IS RESPONSIBLE FOR MEANS, METHODS, AND SEQUENCES OF CONSTRUCTION.
3. ALL CONSTRUCTION TO CONFORM TO STATE AND LOCAL BLDG. CODES AND ORDINANCES.
4. FIELD VERIFY ALL EXISTG CONDITIONS AND DIMENSIONS.

KANG ASSOCIATES, INC
339 BOSTON POST ROAD
SUDBURY, MA

RED HOUSE HANDICAPPED ENTRANCE

ACTON, MA

DATE: 06/20/13

SCALE: 1 1/2" = 1'-0"

DETAILS

A2