MASSACHUSETTS DEPARTMENT OF TRANSPORTATION
HIGHWAY DIVISION

MAYNARD & ACTON
ASSABET RIVER RAIL TRAIL

STATE	FED. AID PROJ. NO.	SHEET NO.	TOTAL SHEETS
MA	-	1	214
PROJECT FILE NO.	604531		

TITLE SHEET & INDEX

PLAN AND PROFILE OF

ASSABET RIVER RAIL TRAIL

(BRIDGE NOS. M-10-012, A-02-034 & A-02-042)

IN THE TOWNS OF

MAYNARD & ACTON

MIDDLESEX COUNTY

THE MASSACHUSETTS HIGHWAY DEPARTMENT STANDARD SPECIFICATIONS FOR HIGHWAYS AND BRIDGES DATED 1988, AS AMENDED, THE SUPPLEMENTAL SPECIFICATIONS DATED JUNE 15, 2012, THE 2014 CONSTRUCTION STANDARD DETAILS, THE 1996 CONSTRUCTION AND TRAFFIC STANDARD DETAILS, (AS RELATED TO TRAFFIC STANDARD DETAILS ONLY), THE LATEST MANUAL ON UNIFORM TRAFFIC CONTROL DEVICES FOR STREETS AND HIGHWAYS WITH MASSACHUSETTS AMENDMENTS, THE 1990 STANDARD DRAWINGS FOR SIGNS AND SUPPORTS, THE 1968 STANDARD DRAWINGS FOR TRAFFIC SIGNALS AND HIGHWAY LIGHTING, AND THE LATEST EDITION OF THE AMERICAN STANDARD FOR NURSERY STOCK, WILL GOVERN.

INDEX

SHEET NO.	DESCRIPTION
1	TITLE SHEET & INDEX
2	LEGEND & ABBREVIATIONS
3	KEY PLAN & BORING LOCATIONS
~~4-7~~	~~BORING LOGS~~
8-13	TYPICAL SECTIONS
~~14-30~~	~~CONSTRUCTION BASELINE TIES~~
53 ~~31-66~~ 64	CONSTRUCTION PLANS & PROFILES
~~67-76~~	~~CURB TIE & GRADING PLANS~~
~~77-97~~	~~TRAFFIC SIGN & PAVEMENT MARKINGS~~
~~98-99~~	~~TRAFFIC SIGN SUMMARY SHEET~~
~~100-102~~	~~TEMPORARY TRAFFIC CONTROL PLANS~~
~~103-119~~	~~LANDSCAPING PLANS AND DETAILS~~
122 ~~120~~-123	WETLAND REPLICATION PLANS
124-129	CONSTRUCTION DETAILS
~~130-131~~	~~WHEELCHAIR RAMP/DRIVEWAY DETAILS~~
~~133-133~~	~~RETAINING WALL DETAILS~~
~~134-146~~	~~BRIDGE PLANS (SKETCH PLANS)~~
147-214	CROSS SECTIONS (ONLY CROSS SECTIONS WITHIN ENVIRONMENTALLY IMPACTED AREAS HAVE BEEN PROVIDED)

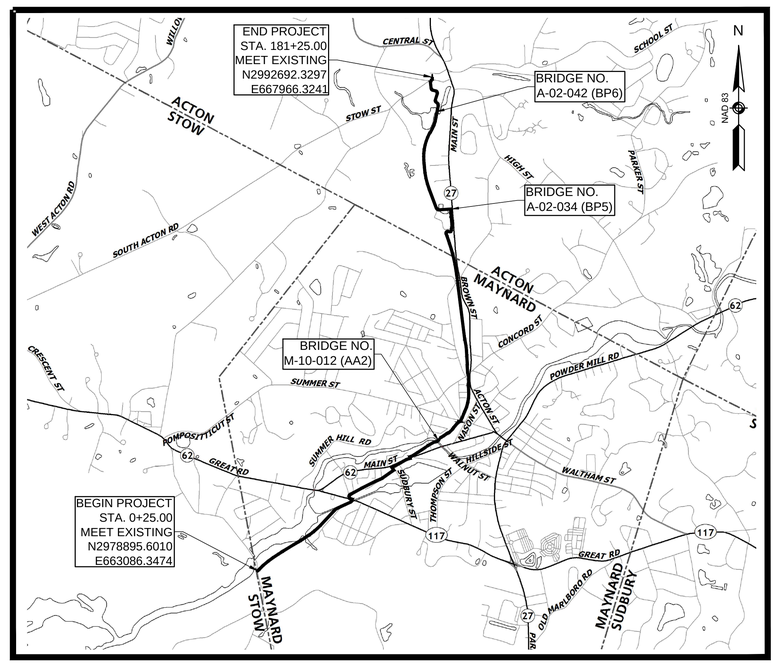

0 2000 4000 5000 6000

SCALE: 1" = 2000'

LENGTH OF PROJECT = 18,075 FEET = 3.423 MILES

TRAIL DESIGN DESIGNATION

DESIGN SPEED	18 MPH (12 MPH IN CONSTRAINED AREAS)
MINIMUM HORIZONTAL CURVE RADIUS	60' (27' IN CONSTRAINED AREAS)
MINIMUM LENGTH OF CREST VERTICAL CURVE	100'
MAXIMUM GRADE FOR LEVEL TERRAIN	4.5%

NOTICE OF INTENT

APRIL 3, 2015

GPI Greenman-Pedersen, Inc.
Engineering and Construction Services
181 Ballardvale Street, Suite 202, Wilmington, MA 01887
Tel: (978) 570-2999 Fax: (978) 658-3044
http://www.gpinet.com
Other Offices In: FL, MD, MI, NH, NJ, NY, OH, PA, VA, VT, WA

DATE	DESCRIPTION	REV #

massDOT
Massachusetts Department of Transportation
Highway Division

RECOMMENDED FOR APPROVAL

CHIEF ENGINEER DATE

DEPARTMENT OF TRANSPORTATION
FEDERAL HIGHWAY ADMINISTRATION

APPROVED:

DIVISION ADMINISTRATOR DATE

APPROVED

HIGHWAY ADMINISTRATOR DATE

604531_HD(CS&LE).DWG Plotted on 3-Apr-2015 10:39 AM

GENERAL SYMBOLS

EXISTING	PROPOSED	DESCRIPTION
JB	JB	JERSEY BARRIER ON BRIDGE OR JERSEY BARRIER
CB	CB	CATCH BASIN
		CATCH BASIN CURB INLET
FP	FP	FLAG POLE
GP	GP	GAS PUMP
MB	MB	MAIL BOX
		POST SQUARE
		POST CIRCULAR
WELL	WELL	WELL
EHH	EHH	ELECTRIC HANDHOLE
		FENCE GATE POST
GG	GG	GAS GATE
BHL #	BHL #	BORING HOLE
MW #	MW #	MONITORING WELL
TP #	TP #	TEST PIT
		HYDRANT
		LIGHT POLE
CO.BD.		COUNTY BOUND
		GPS POINT
		CABLE MANHOLE
		DRAINAGE MANHOLE
		ELECTRIC MANHOLE
		GAS MANHOLE
		MISC MANHOLE
		SEWER MANHOLE
		TELEPHONE MANHOLE
		WATER MANHOLE
MHB	MHB	MASSACHUSETTS HIGHWAY BOUND
MON		MONUMENT
SB		STONE BOUND
TB		TOWN OR CITY BOUND
		TRAVERSE OR TRIANGULATION STATION
TPL or GUY	TPL or GUY	TROLLEY POLE OR GUY POLE
HTP		TRANSMISSION POLE
UFB	UFB	UTILITY POLE W/ FIREBOX
UPDL	UPDL	UTILITY POLE WITH DOUBLE LIGHT
ULT	ULT	UTILITY POLE W / 1 LIGHT
UPL	UPL	UTILITY POLE
		BUSH
SIZE & TYPE		TREE
		STUMP
		SWAMP / MARSH
WG	WG	WATER GATE
PM	PM	PARKING METER
		OVERHEAD CABLE/WIRE
		CURBING
100 99		CONTOURS
		UNDERGROUND DRAIN PIPE (DOUBLE LINE 24 INCH AND OVER)
		UNDERGROUND ELECTRIC DUCT (DOUBLE LINE 24 INCH AND OVER)
		UNDERGROUND GAS MAIN (DOUBLE LINE 24 INCH AND OVER)
		UNDERGROUND SEWER MAIN (DOUBLE LINE 24 INCH AND OVER)
		UNDERGROUND TELEPHONE DUCT (DOUBLE LINE 24 INCH AND OVER)
		UNDERGROUND WATER MAIN (DOUBLE LINE 24 INCH AND OVER)
		BALANCE STONE WALL
		GUARD RAIL - STEEL POSTS
		GUARD RAIL - WOOD POSTS
		CHAIN LINK OR METAL FENCE
		WOOD FENCE
		HAY BALES/SILT FENCE
		TREE LINE OR LIMIT OF CLEARING AND GRUBBING
		SAWCUT LINE
		TOP OR BOTTOM OF SLOPE
		LIMIT OF EDGE OF PAVEMENT OR COLD PLANE AND OVERLAY
		BANK OF RIVER OR STREAM
		BORDER OF WETLAND
		100 FT WETLAND BUFFER
		200 FT RIVERFRONT BUFFER
		STATE HIGHWAY LAYOUT
		TOWN OR CITY LAYOUT
		COUNTY LAYOUT
		RAILROAD SIDELINE
		TOWN OR CITY BOUNDARY LINE
		PROPERTY LINE OR APPROXIMATE PROPERTY LINE
		EASEMENT

PAVEMENT MARKINGS SYMBOLS

EXISTING	PROPOSED	DESCRIPTION
		PAVEMENT ARROW - WHITE
ONLY	ONLY	LEGEND "ONLY" - WHITE
	SL	STOP LINE
	CW	CROSSWALK
	SWL	SOLID WHITE LINE
	SYL	SOLID YELLOW LINE
	BWL	BROKEN WHITE LINE
	BYL	BROKEN YELLOW LINE
	DWL	DOTTED WHITE LINE
	DYL	DOTTED YELLOW LINE
	DWLEx	DOTTED WHITE LINE EXTENSION
	DYLEx	DOTTED YELLOW LINE EXTENSION
	DBWL	DOUBLE WHITE LINE
	DBYL	DOUBLE YELLOW LINE

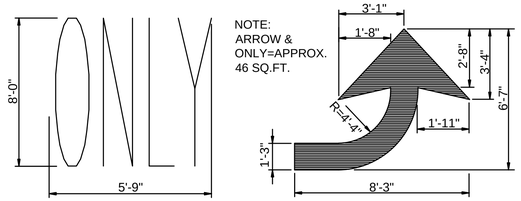

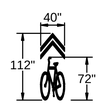

SHARED LANE "SHARROW" MARKING DETAIL

NOT TO SCALE

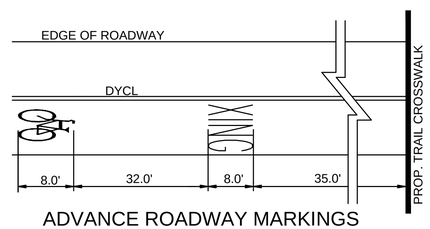

ADVANCE ROADWAY MARKINGS

AT TRAIL XING

NOT TO SCALE

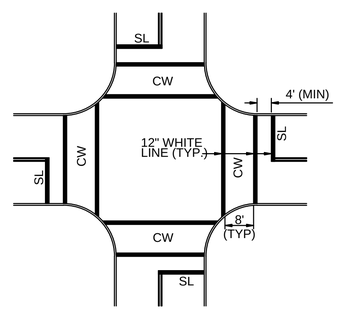

TYPICAL CROSSWALK MARKINGS

NOT TO SCALE

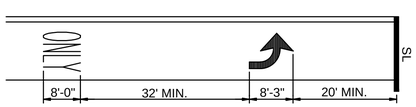

ARROW & ONLY DETAIL

NOT TO SCALE

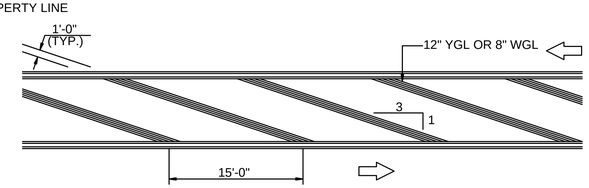

GORE AREA DETAIL

NOT TO SCALE

GENERAL NOTES

MAYNARD & ACTON
ASSABET RIVER RAIL TRAIL

STATE	FED. AID PROJ. NO.	SHEET NO.	TOTAL SHEETS
MA	-	2	214
PROJECT FILE NO.	604531		

LEGEND & ABBREVIATIONS

1. TOPOGRAPHICAL INFORMATION WAS PROVIDED IN NGVD 1929 VERTICAL DATUM AND MA MAINLAND NAD 83 HORIZONTAL DATUM. EXISTING CONDITIONS AND TOPOGRAPHICAL SURVEY PROVIDED BY THOMAS LAND SURVEYORS & ENGINEERING CONSULTANTS, INC., MARCH 23, 2006 AND UPDATED BY SUPPLEMENTAL SURVEY IN 2013 & 2014.
2. THE LOCATIONS OF EXISTING UNDERGROUND UTILITIES ARE SHOWN IN AN APPROXIMATE WAY ONLY AND HAVE NOT BEEN INDEPENDENTLY VERIFIED BY THE OWNER OR ITS REPRESENTATIVE. THE CONTRACTOR SHALL DETERMINE THE EXACT LOCATION OF ALL EXISTING UTILITIES BEFORE COMMENCING WORK, AND AGREES TO BE FULLY RESPONSIBLE FOR ANY AND ALL DAMAGES WHICH MIGHT BE OCCASIONED BY THE CONTRACTOR'S FAILURE TO LOCATE EXACTLY AND TO PRESERVE ANY AND ALL UNDERGROUND UTILITIES. CALL "DIG-SAFE" 1-888-DIGSAFE (344-7233) AT LEAST 72 HOURS BEFORE COMMENCING CONSTRUCTION.
3. WHERE AN EXISTING UNDERGROUND UTILITY IS FOUND TO CONFLICT WITH THE PROPOSED WORK, THE LOCATION, ELEVATION AND SIZE OF THE UTILITY SHALL BE ACCURATELY DETERMINED WITHOUT DELAY BY THE CONTRACTOR, AND THE INFORMATION FURNISHED TO THE ENGINEER FOR RESOLUTION OF THE CONFLICT.
4. THE CONTRACTOR SHALL MAKE ALL ARRANGEMENTS FOR THE ALTERATION AND ADJUSTMENT OF GAS, ELECTRIC, TELEPHONE AND ANY OTHER PRIVATE UTILITIES BY THE UTILITY COMPANIES.
5. AREAS OUTSIDE THE LIMITS OF PROPOSED WORK DISTURBED BY THE CONTRACTOR'S OPERATIONS SHALL BE RESTORED BY THE CONTRACTOR TO THEIR ORIGINAL CONDITION AT THE CONTRACTOR'S EXPENSE.
6. THE TERM "PROPOSED" (PROP.) MEANS WORK TO BE CONSTRUCTED USING NEW MATERIALS, OR, WHERE APPLICABLE, RE-USING EXISTING MATERIALS IDENTIFIED AS "REMOVE & RESET" (R&R).
7. ALL EXISTING SIGNS WITHIN THE PROJECT LIMITS SHALL BE RETAINED UNLESS NOTED OTHERWISE.
8. ALL PROPOSED PAVEMENT MARKINGS SHALL BE THERMOPLASTIC.
9. ALL EXISTING STATE, COUNTY, CITY AND TOWN LOCATION LINES AND PRIVATE PROPERTY LINES HAVE BEEN ESTABLISHED FROM AVAILABLE INFORMATION AND THEIR EXACT LOCATIONS ARE NOT GUARANTEED.
10. ALL TRANSVERSE JOINTS, AND ALL LONGITUDINAL JOINTS BETWEEN NEW SURFACE PAVEMENT AND EXISTING SURFACE PAVEMENT TO REMAIN SHALL BE COATED WITH A HOT POURED RUBBERIZED ASPHALT SEALANT MEETING THE REQUIREMENTS OF FEDERAL SPECIFICATION NUMBER SS-S-1401.
11. ALL DISTURBED AREAS NOT DESIGNATED TO BE PAVED SHALL HAVE LOAM BORROW PLACED AND SEEDED. THE LOAM BORROW SHALL HAVE A MINIMUM DEPTH OF 4 INCHES AND SHALL BE PLACED FLUSH WITH THE TOP OF THE ADJACENT CURB, EDGING, BERM OR PAVEMENT SURFACE.
12. THE LIMIT OF WORK AREA SHALL BE THE STREET RIGHT OF WAY UNLESS SHOWN OTHERWISE.
13. ALL PROPERTY LINES BETWEEN ABUTTERS ARE APPROXIMATE ONLY.
14. PRIOR TO THE START OF ANY NEW UTILITY WORK, ALL ELEVATIONS OF EXISTING UTILITIES IN THOSE AREAS ARE TO BE VERIFIED. THE ENGINEER IS TO BE NOTIFIED IMMEDIATELY SHOULD ANY DISCREPANCIES OCCUR.
15. ALL CASTINGS SHALL BE SET FLUSH WITH FINISHED GRADE.
16. ALL PUBLICLY OWNED GATE BOXES, SERVICE BOXES, MANHOLE FRAMES AND COVERS SHALL BE ADJUSTED TO GRADE BY THE CONTRACTOR.
17. ALL NEW SIDEWALKS AND DRIVEWAY GRADES SHALL MATCH EXISTING GRADES AT BACK OF SIDEWALK LINE UNLESS SHOWN OTHERWISE ON THE PLANS AND CROSS-SECTIONS.
18. THE CONTRACTOR SHALL TAKE EVERY PRECAUTION TO PROTECT ALL EXISTING TREES AND ROOTS THAT ARE NOT DESIGNATED FOR REMOVAL.
19. CONTRACTOR TO CONTACT ENGINEER PRIOR TO INSTALLATION OF BOUNDS FOR FINAL LOCATIONS.
20. DRAINAGE ELEVATIONS ARE PROVIDED FOR DESIGN PURPOSES ONLY. THE CONTRACTOR SHALL VERIFY BY TEST PIT, THE LOCATIONS OF EXISTING UTILITIES WHICH MAY CONFLICT WITH THE PROPOSED DRAINAGE DESIGN. ANY FIELD ADJUSTMENTS REQUIRED WILL BE MADE AS APPROVED OR DIRECTED BY THE ENGINEER. ONLY AFTER THE CONTRACTOR VERIFIES ELEVATIONS FOR THE CONSTRUCTABILITY OF THE DRAINAGE SYSTEM SHALL ANY STRUCTURES BE ORDERED. ANY FIELD ADJUSTMENTS TO LINE & GRADE UP TO A DEPTH OF 5' SHALL BE INCLUDED IN THE COST OF THE PIPE. PIPE EXCAVATION GREATER THAN 5' WILL BE PAID UNDER CLASS B TRENCH EXCAVATION.

GENERAL ABBREVIATIONS

AADT	ANNUAL AVERAGE DAILY TRAFFIC	EXIST (or EX)	EXISTING	PVC	POINT OF VERTICAL CURVATURE
ABAN	ABANDON	EXC	EXCAVATION	PVI	POINT OF VERTICAL INTERSECTION
ADJ	ADJUST	F&C	FRAME AND COVER	PVT	POINT OF VERTICAL TANGENCY
APPROX.	APPROXIMATE	F&G	FRAME AND GRATE	PVMT	PAVEMENT
A.C.	ASPHALT CONCRETE	FDN.	FOUNDATION	PWW	PAVED WATER WAY
ACCM PIPE	ASPHALT COATED CORRUGATED METAL PIPE	FLDSTN	FIELDSTONE	R	RADIUS OF CURVATURE
BIT.	BITUMINOUS	GAR	GARAGE	R&D	REMOVE AND DISPOSE
BC	BOTTOM OF CURB	GD	GROUND	RCP	REINFORCED CONCRETE PIPE
BD.	BOUND	GG	GAS GATE	RD	ROAD
BL	BASELINE	GI	GUTTER INLET	RDWY	ROADWAY
BLDG	BUILDING	GIP	GALVANIZED IRON PIPE	REM	REMOVE
BLSF	BORDERING LAND SUBJECT TO FLOODING	GRAN	GRANITE	RET	RETAIN
BM	BENCHMARK	GRAV	GRAVEL	RET WALL	RETAINING WALL
BO	BY OTHERS	GRD	GUARD	ROW	RIGHT OF WAY
BOS	BOTTOM OF SLOPE	HDW	HEADWALL	RR	RAILROAD
BR.	BRIDGE	HMA	HOT MIX ASPHALT	R&R	REMOVE AND RESET
BVW	BORDERING VEGETATED WETLAND	HOR	HORIZONTAL	R&S	REMOVE AND STACK
CB	CATCH BASIN	HYD	HYDRANT	RT	RIGHT
CBCI	CATCH BASIN WITH CURB INLET	INV	INVERT	SB	STONE BOUND
CC	CEMENT CONCRETE	JCT	JUNCTION	SHLD	SHOULDER
CCM	CEMENT CONCRETE MASONRY	L	LENGTH OF CURVE	SMH	SEWER MANHOLE
CEM	CEMENT	LB	LEACH BASIN	ST	STREET
CI	CURB INLET	LP	LIGHT POLE	STA	STATION
CIP	CAST IRON PIPE	LT	LEFT	SSD	STOPPING SIGHT DISTANCE
CLF	CHAIN LINK FENCE	MAX	MAXIMUM	SHLO	STATE HIGHWAY LAYOUT LINE
CL	CENTERLINE	MB	MAILBOX	SW	SIDEWALK
CMP	CORRUGATED METAL PIPE	MH	MANHOLE	T	TANGENT DISTANCE OF CURVE/TRUCK %
CSP	CORRUGATED STEEL PIPE	MHB	MASSACHUSETTS HIGHWAY BOUND	TAN	TANGENT
CO.	COUNTY	MIN	MINIMUM	TEMP	TEMPORARY
CONC	CONCRETE	NIC	NOT IN CONTRACT	TC	TOP OF CURB
CONT	CONTINUOUS	NO.	NUMBER	TOS	TOP OF SLOPE
CONST	CONSTRUCTION	PC	POINT OF CURVATURE	TYP	TYPICAL
CR GR	CROWN GRADE	PCC	POINT OF COMPOUND CURVATURE	UP	UTILITY POLE
DHV	DESIGN HOURLY VOLUME	P.G.L.	PROFILE GRADE LINE	UPL	UTILITY POLE WITH LIGHT
DI	DROP INLET	PI	POINT OF INTERSECTION	VAR	VARIES/VARIABLE
DIA	DIAMETER	POC	POINT ON CURVE	VERT	VERTICAL
DIP	DUCTILE IRON PIPE	POT	POINT ON TANGENT	VC	VERTICAL CURVE
DW	STEADY DON'T WALK - PORTLAND ORANGE	PRC	POINT OF REVERSE CURVATURE	VGC	VERTICAL GRANITE CURB
DWY	DRIVEWAY	PROJ	PROJECT	WCR	WHEEL CHAIR RAMP
ELEV (or EL.)	ELEVATION	PROP	PROPOSED	WG	WATER GATE
EMB	EMBANKMENT	PSB	PLANTABLE SOIL BORROW	WM	WATER METER/WATER MAIN
EOP	EDGE OF PAVEMENT	PT	POINT OF TANGENCY	X-SECT	CROSS SECTION

604531_HD(CS&LE).DWG Plotted on 3-Apr-2015 10:40 AM

MAYNARD & ACTON
ASSABET RIVER RAIL TRAIL

STATE	FED. AID PROJ. NO.	SHEET NO.	TOTAL SHEETS
MA	-	3	214
PROJECT FILE NO.	604531		

KEY PLAN & BORING LOCATIONS

SHEET REFERENCE:	1	2	3	4	5	6	7	8	9	10	11	12	13	14	15
Drawing Title:	Drawing Number:														
CONSTRUCTION BASELINE TIES	14	14	15	15	16	16	18	18	17	17	19	20	20	21	21
CONSTRUCTION PLANS & PROFILES	31	32	33	34	35	36	38	39	40	42	43	44	45	46	47
TRAFFIC SIGN & PAVEMENT MARKINGS	77	77	78	78	79	80	81	81	82	83	84	85	86	87	88
LANDSCAPING PLANS	103	103	104	104	105	105	106	106	107	107	108	108	109	109	110
WETLAND REPLICATION PLANS			120												
BRIDGE PLANS												134-139			

- BORING/TEST PIT LOCATION
B/BB-# = BORING NUMBER
(SEE BRIDGE PLANS FOR BRIDGE BORING LOGS)
TP-# = TEST PIT NUMBER

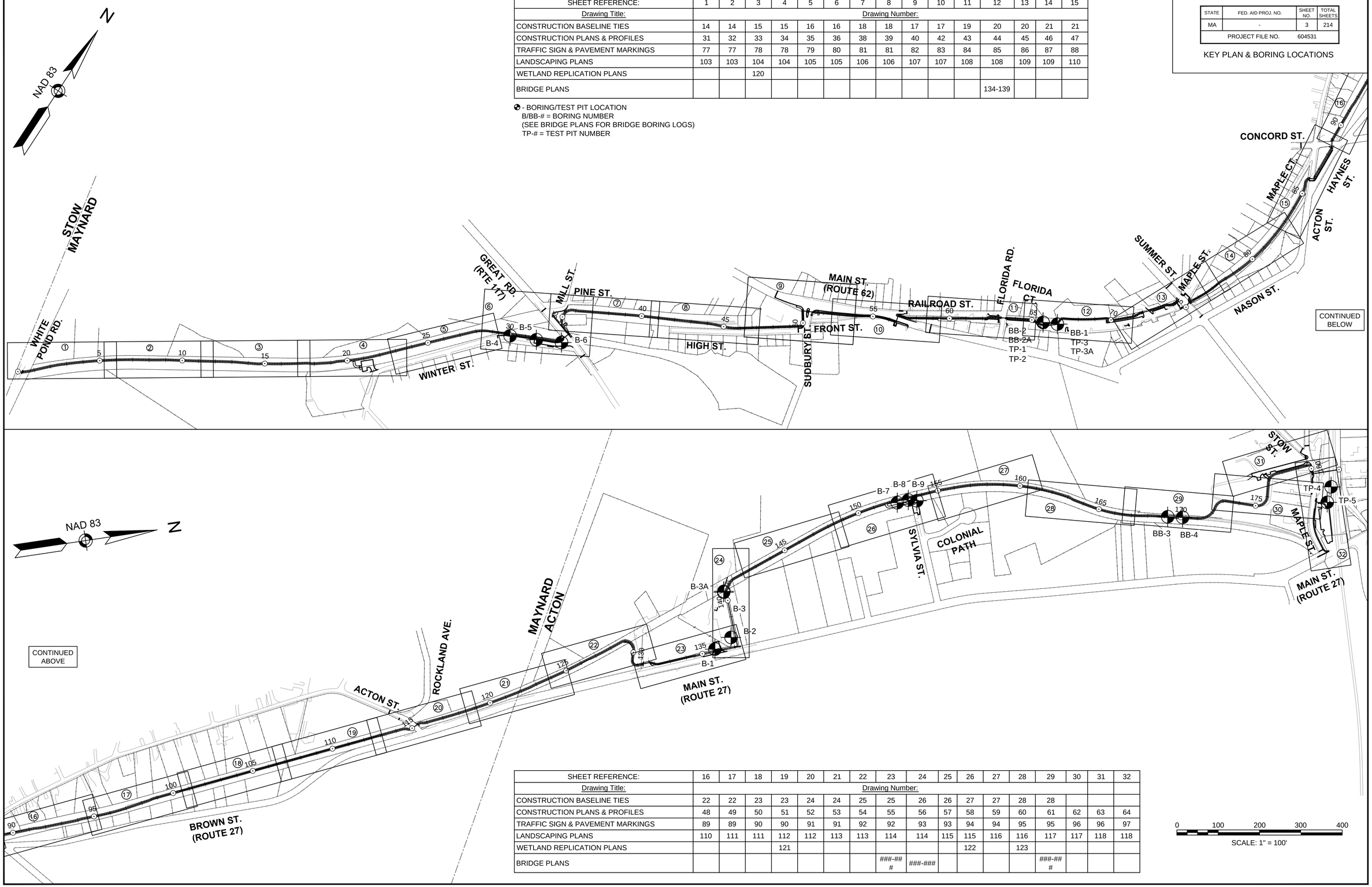

SHEET REFERENCE:	16	17	18	19	20	21	22	23	24	25	26	27	28	29	30	31	32
Drawing Title:	Drawing Number:																
CONSTRUCTION BASELINE TIES	22	22	23	23	24	24	25	25	26	26	27	27	28	28			
CONSTRUCTION PLANS & PROFILES	48	49	50	51	52	53	54	55	56	57	58	59	60	61	62	63	64
TRAFFIC SIGN & PAVEMENT MARKINGS	89	89	90	90	91	91	92	92	93	93	94	94	95	95	96	96	97
LANDSCAPING PLANS	110	111	111	112	112	113	113	114	114	115	115	116	116	117	117	118	118
WETLAND REPLICATION PLANS				121							122		123				
BRIDGE PLANS								###-###	###-###					###-###			

0 100 200 300 400
SCALE: 1" = 100'

Plotted on 3-Apr-2015 10:40 AM
604531_HD(KEY).DWG

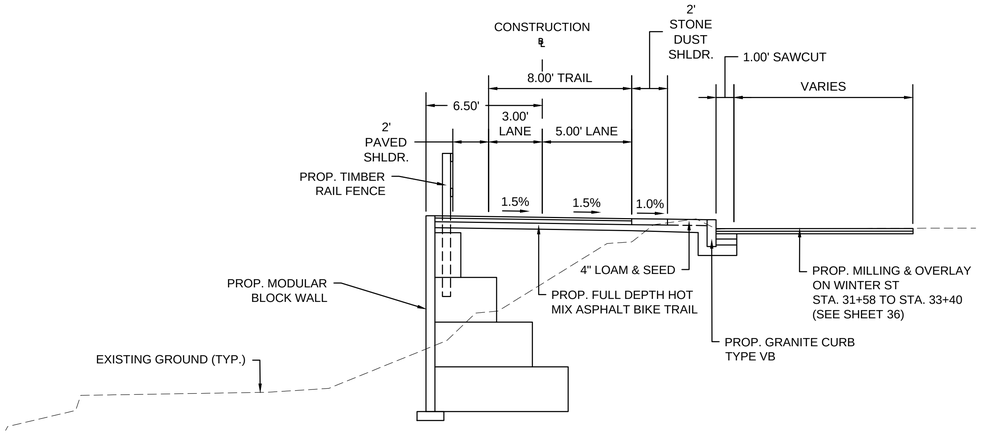

TYPICAL SECTION - 10' TRAIL WITH MODULAR BLOCK WALL (WINTER ST)

SCALE 1" = 4'

STA. 29+78± - STA. 33+20±

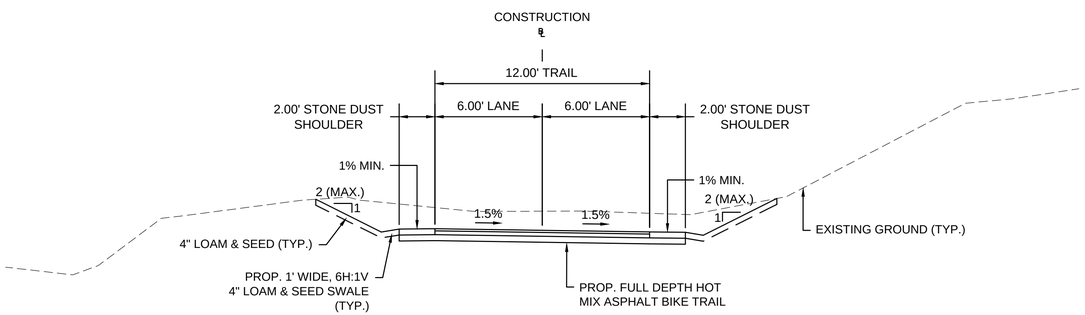

CUT SECTION

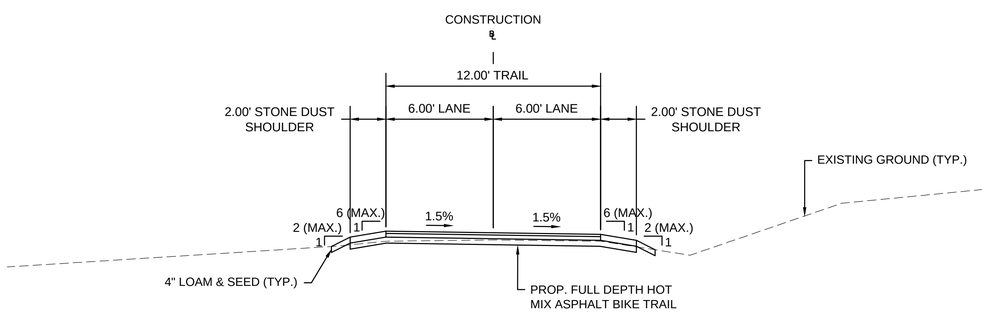

FILL SECTION

TYPICAL SECTION - 12' WIDE TRAIL

SCALE 1" = 4'

STA. 0+25± - STA. 27+78±
STA. 34+89± - STA. 45+05±
STA. 75+62± - STA. 100+35±
STA. 112+86± - STA. 126+02±
STA. 126+63± - STA. 128+90±
STA. 129+70± - STA. 131+35±
STA. 140+62± - STA. 177+05±
STA. 500+06± - STA. 501+00± (SYLVIA ST)
STA. 0+06± - STA. 0+61± (ICEHOUSE LANDING)

HOR. SCALE IN FEET
4 0 4 8
4 0 4 8
VER. SCALE IN FEET

MAYNARD & ACTON
ASSABET RIVER RAIL TRAIL

STATE	FED. AID PROJ. NO.	SHEET NO.	TOTAL SHEETS
MA	-	8	214
PROJECT FILE NO.	604531		

TYPICAL SECTIONS

PAVEMENT NOTES

FULL DEPTH HOT MIX ASPHALT BIKE TRAIL

SURFACE COURSE: 1 1/2" SUPERPAVE SURFACE COURSE - 9.5 (SSC-9.5)
INTERMEDIATE COURSE: 2 1/2" SUPERPAVE INTERMEDIATE COURSE - 12.5 (SIC-12.5)
FOUNDATION: 2" - 8" GRAVEL BORROW (M1.03.0 TYPE B) (SEE NOTE BELOW)
24" SPECIAL BORROW (SEE NOTE BELOW)

NOTE: SUBBASE SHALL BE A MINIMUM OF 2" GRAVEL BORROW FOR LEVELING OVER RAILROAD BALLAST. SUBBASE SHALL BE 8" GRAVEL BORROW OVER MINIMUM 24" SPECIAL BORROW AT FILL SECTIONS IN AREAS OF WETLANDS AND OTHER UNSUITABLE MATERIAL IN ACCORDANCE WITH SECTIONS 150 AND 170 OF THE STANDARD SPECIFICATIONS FOR HIGHWAYS AND BRIDGES.

FULL DEPTH HOT MIX ASPHALT CONSTRUCTION
(AT ROADWAY CROSSINGS AS SHOWN ON PLANS)

SURFACE COURSE: 1-3/4" SUPERPAVE SURFACE COURSE - 12.5 (SSC-12.5)
1-3/4" SUPERPAVE INTERMEDIATE COURSE - 12.5 (SIC-12.5)

BASE COURSE: 3-1/2" SUPERPAVE BASE COURSE - 37.5 (SBC-37.5)

SUBBASE: 4" DENSE GRADED CRUSHED STONE OVER
8" GRAVEL BORROW (M1.03.0 TYPE B) (OR TO DEPTH OF
EXISTING GRAVEL SUBBASE, WHICHEVER IS GREATER)

PAVEMENT MILLING & HOT MIX ASPHALT OVERLAY

SURFACE COURSE: 1-3/4" SUPERPAVE SURFACE COURSE - 12.5 (SSC-12.5)

SURFACE MILLING: 1-3/4" PAVEMENT MILLING TO MATCH EXISTING CROSS SLOPE

TACK COAT: ASPHALT EMULSION FOR TACK COAT SHALL BE APPLIED AT THE RATE OF 0.07 GAL/S.Y. FOR MILLED SURFACES AND 0.05 GAL/S.Y. FOR SMOOTH TIGHT PAVED SURFACES

STONE DUST SHOULDER

SURFACE: 4" STONE DUST OVER WEED CONTROL FABRIC

FOUNDATION: 2" - 8" GRAVEL BORROW (M1.03.0 TYPE B)

CEMENT CONCRETE SIDEWALKS, REST AREAS & WHEELCHAIR RAMPS:

SURFACE COURSE: 4" CEMENT CONCRETE (AIR ENTRAINED 4000 PSI, 3/4", 610)

SUBBASE: 8" GRAVEL BORROW (M1.03.0 TYPE B)

CEMENT CONCRETE SPLITTER ISLANDS:

SURFACE COURSE: 4" STAMPED CEMENT CONCRETE (AIR ENTRAINED 4000 PSI, 3/4", 610)

SUBBASE: 8" GRAVEL BORROW (M1.03.0 TYPE B)

FULL DEPTH WIDENING LESS THAN 4 FEET

SURFACE: 1-3/4" SUPERPAVE SURFACE COURSE - 12.5 (SSC-12.5)
1-3/4" SUPERPAVE INTERMEDIATE COURSE - 12.5 (SIC-12.5)

BASE: 6" HIGH-EARLY-STRENGTH CEMENT CONCRETE BASE COURSE

SUBBASE: 8" GRAVEL BORROW (M1.03.0 TYPE B)

HOT MIX ASPHALT WALKS

SURFACE: 1 1/4" SUPERPAVE SURFACE COURSE - 9.5 (SSC-9.5)
1 1/4" SUPERPAVE INTERMEDIATE COURSE - 12.5 (SIC-12.5)

SUBBASE: 8" GRAVEL BORROW (M1.03.0 TYPE B OR EXISTING GRAVEL BORROW TO REMAIN)

HOT MIX ASPHALT PARKING LOTS & DRIVEWAYS

SURFACE COURSE: 1 1/2" SUPERPAVE SURFACE COURSE 12.5 (SSC-12.5)

INTERMEDIATE COURSE: 2" SUPERPAVE INTERMEDIATE COURSE 12.5 (SIC-12.5)

FOUNDATION: 8" GRAVEL BORROW (M1.03.0 TYPE B OR EXISTING GRAVEL BORROW TO REMAIN)

604531_HD(TYP).DWG Plotted on 3-Apr-2015 10:40 AM

MAYNARD & ACTON
ASSABET RIVER RAIL TRAIL

STATE	FED. AID PROJ. NO.	SHEET NO.	TOTAL SHEETS
MA	-	9	214
PROJECT FILE NO.	604531		

TYPICAL SECTIONS

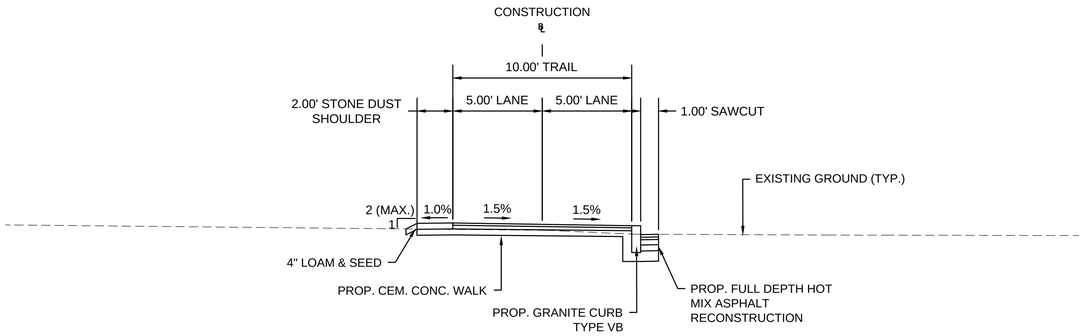

TYPICAL SECTION - 10' CEM. CONC. WALK (SUDBURY ST)
SCALE 1" = 4'
STA 49+70± TO STA 50+73±

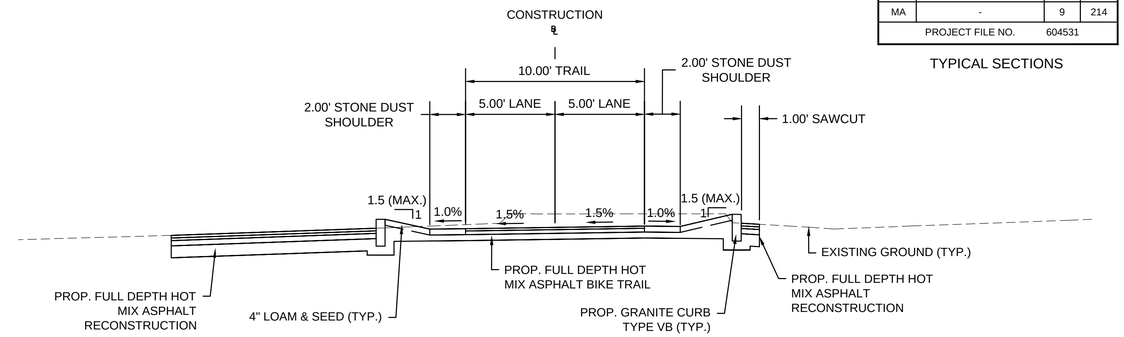

TYPICAL SECTION - 10' WIDE TRAIL
(RAILROAD ST & MAIN ST)
SCALE 1" = 4'
STA 62+15± TO STA 62+95±

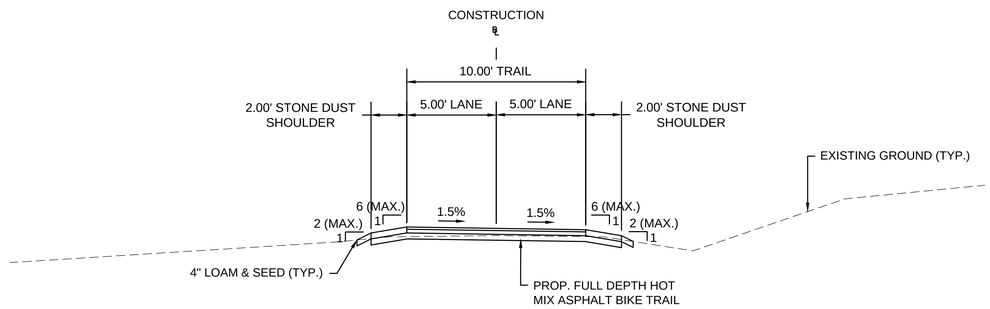

FILL SECTION

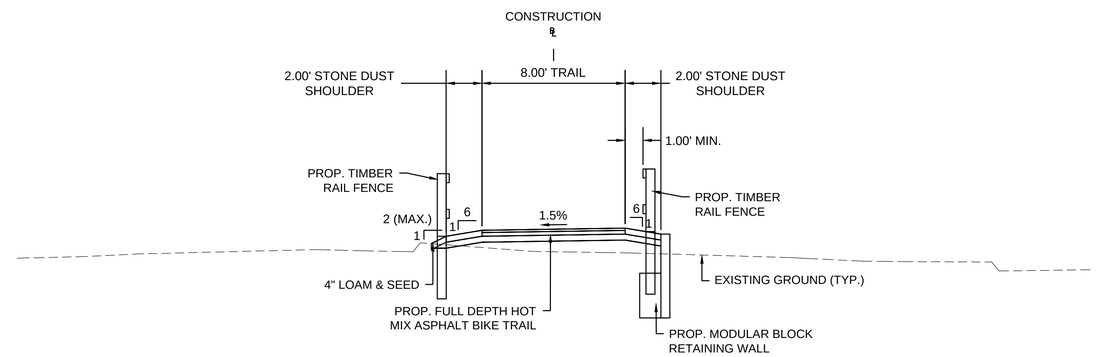

TYPICAL SECTION - 8' WIDE TRAIL WITH
MODULAR BLOCK RETAINING WALL
(RAILROAD ST & MAIN ST)
SCALE 1" = 4'
STA 57+65± TO STA 59+29±

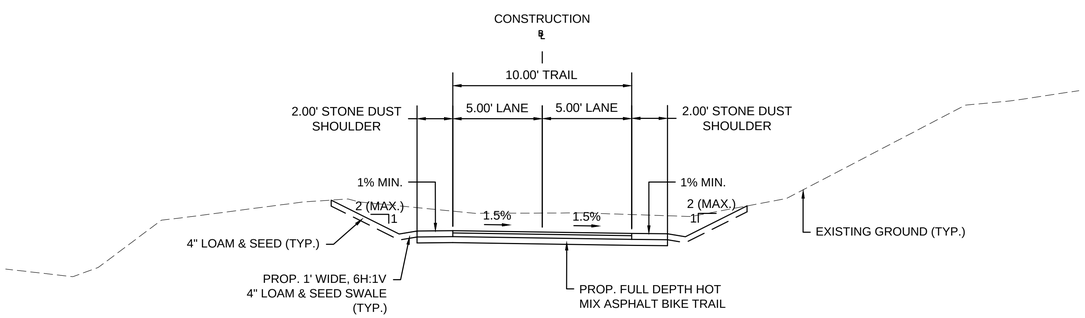

CUT SECTION

TYPICAL SECTION - 10' WIDE TRAIL
SCALE 1" = 4'
STA. 28+81± - STA. 29+78±
STA. 33+20± - STA. 33+39±
STA. 45+85± - STA. 49+58±
STA. 59+58± - STA. 62+15±
STA. 62+95± - STA. 63+15±
STA. 64+90± - STA. 65+77±
STA. 66+68± - STA. 69+50±
STA. 100+45± - STA. 112+76±
STA. 131+72± - STA. 134+39±

TYPICAL SECTION - 8' WIDE TRAIL
(RAILROAD ST & MAIN ST)
SCALE 1" = 4'
STA 56+93± TO STA 57+40±

HOR. SCALE IN FEET
4 0 4 8
4 0 4 8
VER. SCALE IN FEET

604531_HD(TYP).DWG Plotted on 3-Apr-2015 10:40 AM

MAYNARD & ACTON
ASSABET RIVER RAIL TRAIL

STATE	FED. AID PROJ. NO.	SHEET NO.	TOTAL SHEETS
MA	-	10	214
PROJECT FILE NO.	604531		

TYPICAL SECTIONS

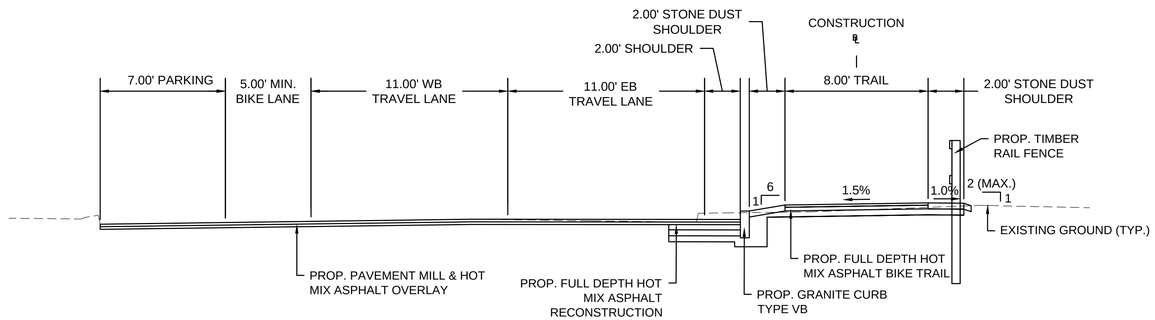

TYPICAL SECTION - 8' WIDE TRAIL
ADJACENT TO MAIN ST WITH PARKING ON
ONE SIDE

SCALE 1" = 4'
STA. 54+54± - STA. 56+37±

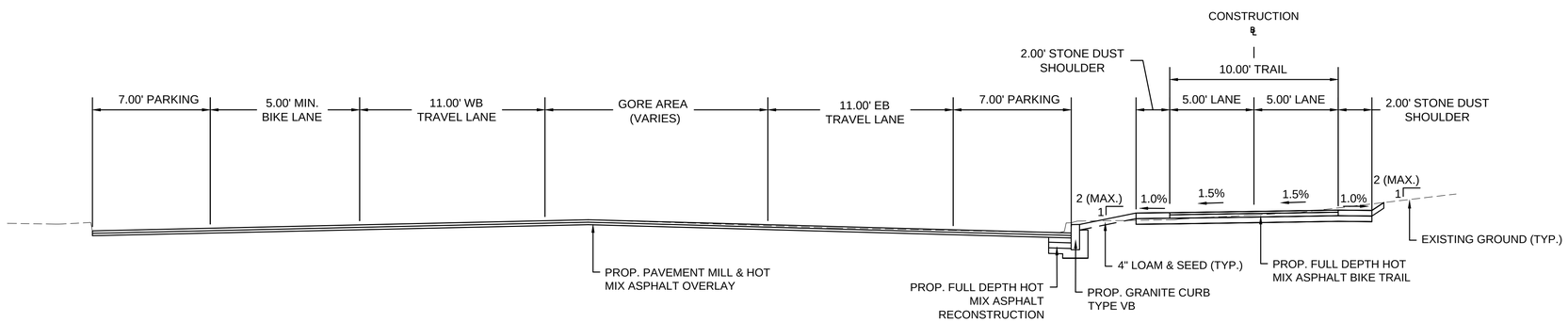

TYPICAL SECTION - 10' WIDE TRAIL
ADJACENT TO MAIN ST WITH PARKING ON
BOTH SIDES

SCALE 1" = 4'
STA. 51+50± - STA. 53+83±

HOR. SCALE IN FEET
4 0 4 8
4 0 4 8
VER. SCALE IN FEET

604531_HD(TYP).DWG Plotted on 3-Apr-2015 10:40 AM

MAYNARD & ACTON
ASSABET RIVER RAIL TRAIL

STATE	FED. AID PROJ. NO.	SHEET NO.	TOTAL SHEETS
MA	-	11	214
PROJECT FILE NO.	604531		

TYPICAL SECTIONS

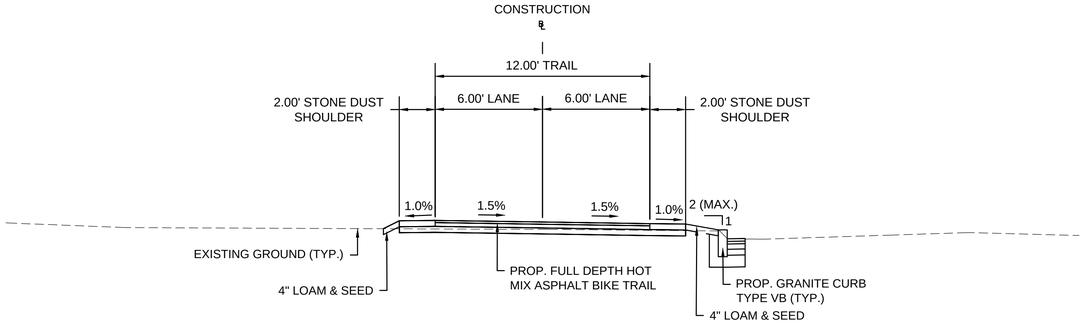

TYPICAL SECTION - 12' WIDE TRAIL (HAYNES ST)

SCALE 1" = 4'
STA 86+34± TO STA 88+38±

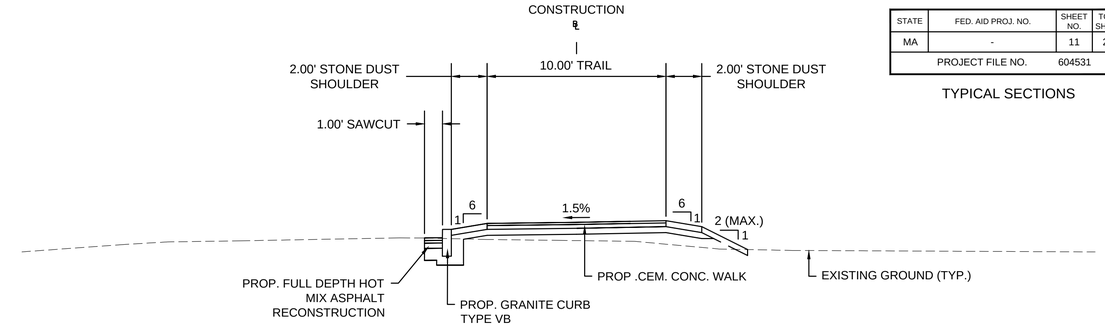

TYPICAL SECTION - 10' CEM .CONC. WALK (MAPLE ST)

SCALE 1" = 4'
STA179+89± TO STA 180+38±

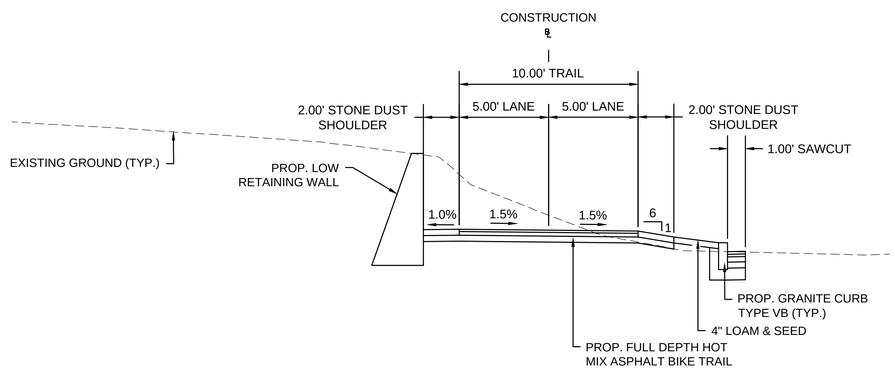

TYPICAL SECTION - 10' WIDE TRAIL WITH LOW RETAINING WALL

SCALE 1" = 4'
STA 73+26± TO STA 74+15±

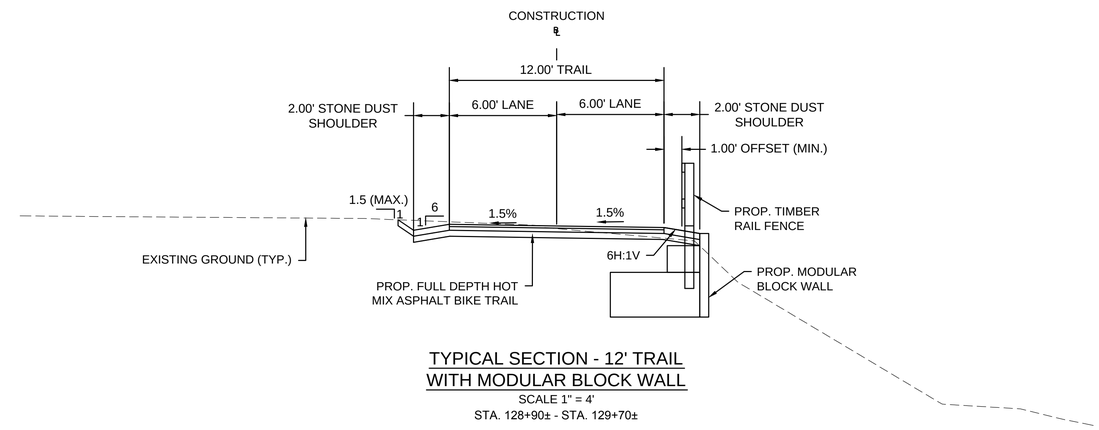

TYPICAL SECTION - 12' TRAIL WITH MODULAR BLOCK WALL

SCALE 1" = 4'
STA. 128+90± - STA. 129+70±

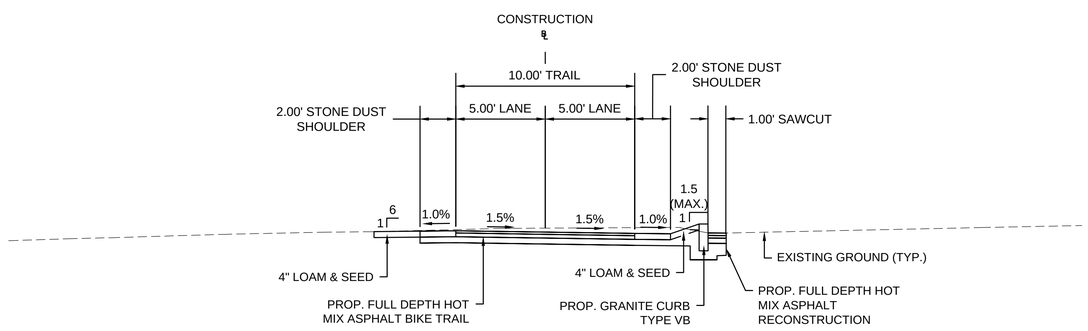

TYPICAL SECTION - 10' WIDE TRAIL (FLORIDA RD & MUNICIPAL PARKING LOT)

SCALE 1" = 4'
STA 63+41± TO STA 64+90±
STA 69+50± TO STA 72+00±

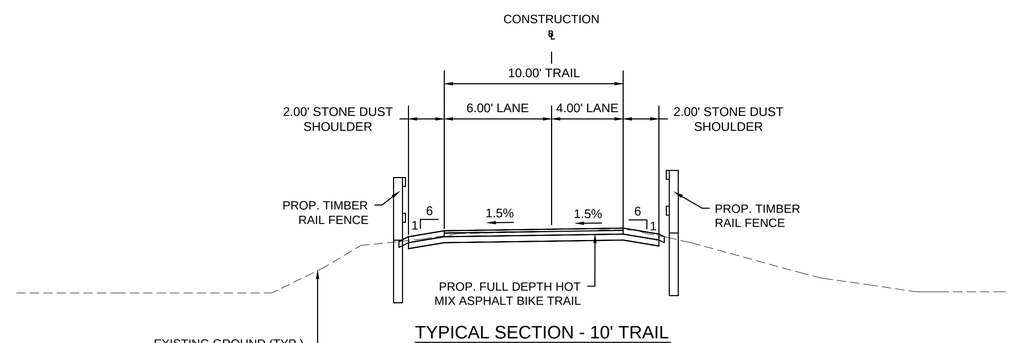

TYPICAL SECTION - 10' TRAIL OVER CROSS CULVERT

SCALE 1" = 4'
STA. 126+12± - STA. 126+54±

HOR. SCALE IN FEET
4 0 4 8
4 0 4 8
VER. SCALE IN FEET

604531_HD(TYP).DWG Plotted on 3-Apr-2015 10:40 AM

MAYNARD & ACTON
ASSABET RIVER RAIL TRAIL

STATE	FED. AID PROJ. NO.	SHEET NO.	TOTAL SHEETS
MA	-	12	214
PROJECT FILE NO.	604531		

TYPICAL SECTIONS

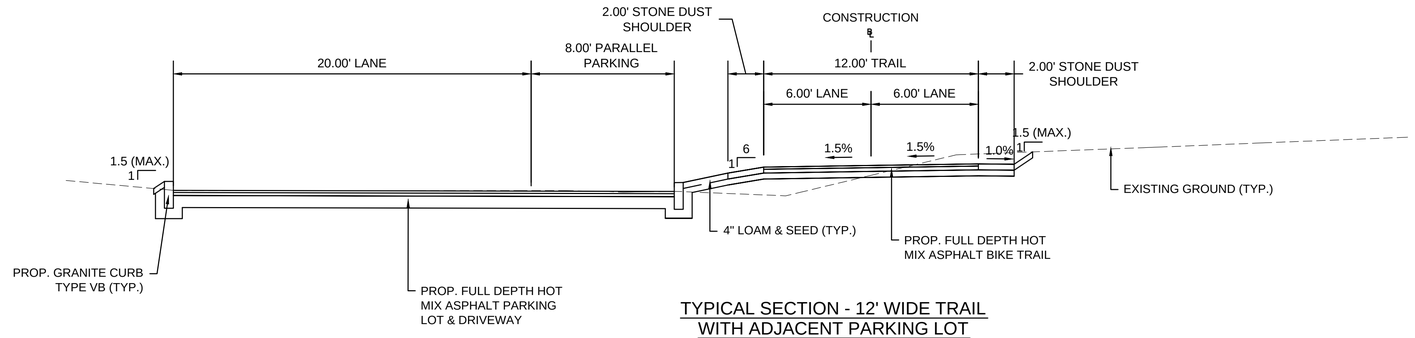

TYPICAL SECTION - 12' WIDE TRAIL WITH ADJACENT PARKING LOT
SCALE 1" = 4'
STA 177+05± TO STA 179+40±

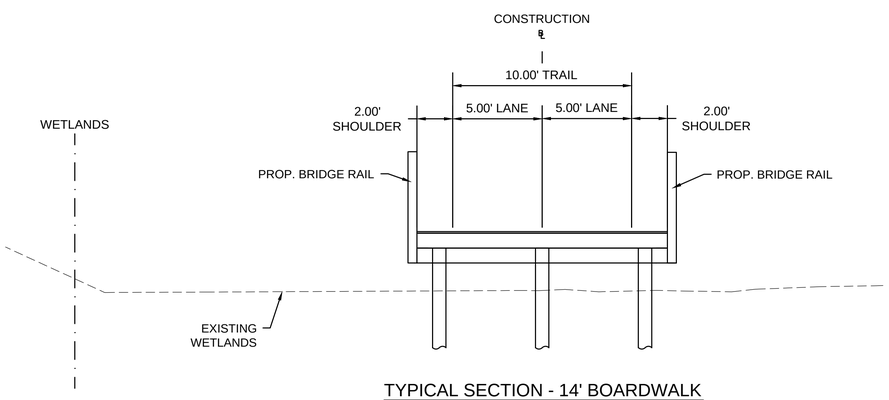

TYPICAL SECTION - 14' BOARDWALK
SCALE 1" = 4'
STA 137+18± TO STA 140+43±

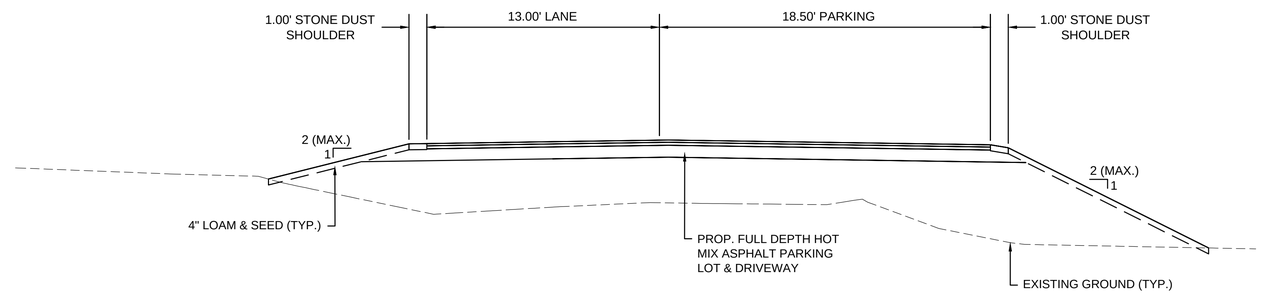

TYPICAL SECTION - PARKING LOT (SYLVIA ST)
SCALE 1" = 4'
STA. 502+12± - STA. 502+85± (SYLVIA ST)

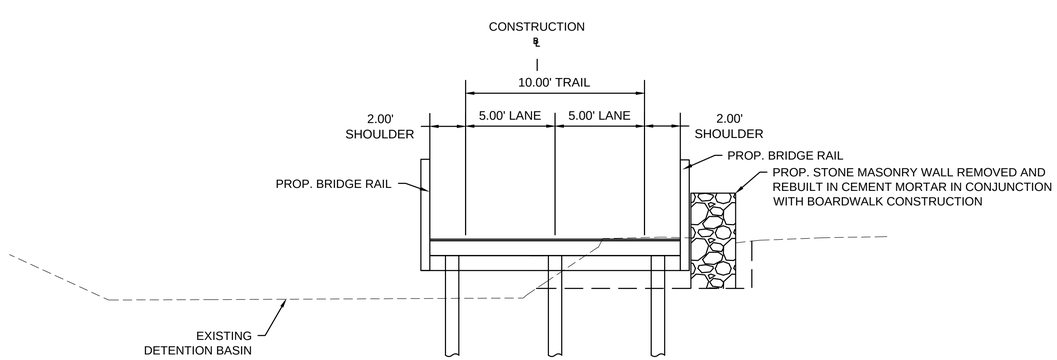

TYPICAL SECTION - 14' BOARDWALK WITH STONE MASONRY WALL
SCALE 1" = 4'
STA 134+53± TO STA 137+18±

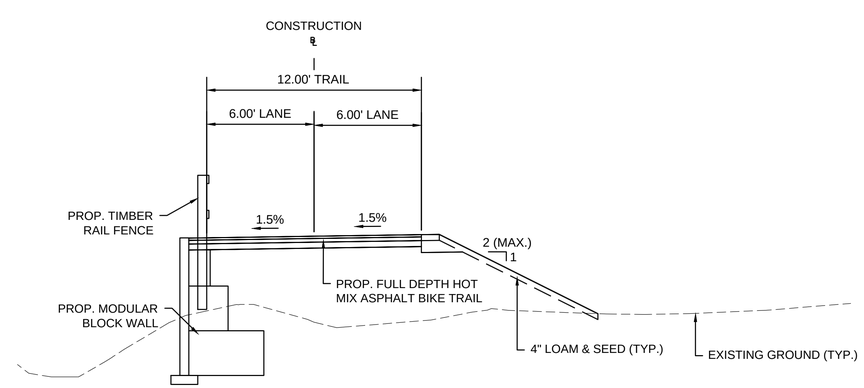

TYPICAL SECTION - 12' TRAIL WITH MODULAR BLOCK WALL (SYLVIA ST)
SCALE 1" = 4'
STA. 501+00± - STA. 502+04± (SYLVIA ST)

HOR. SCALE IN FEET
4 0 4 8
4 0 4 8
VER. SCALE IN FEET

604531_HD(TYP).DWG Plotted on 3-Apr-2015 10:40 AM

MAYNARD & ACTON
ASSABET RIVER RAIL TRAIL

STATE	FED. AID PROJ. NO.	SHEET NO.	TOTAL SHEETS
MA	-	13	214
PROJECT FILE NO.	604531		

TYPICAL SECTIONS

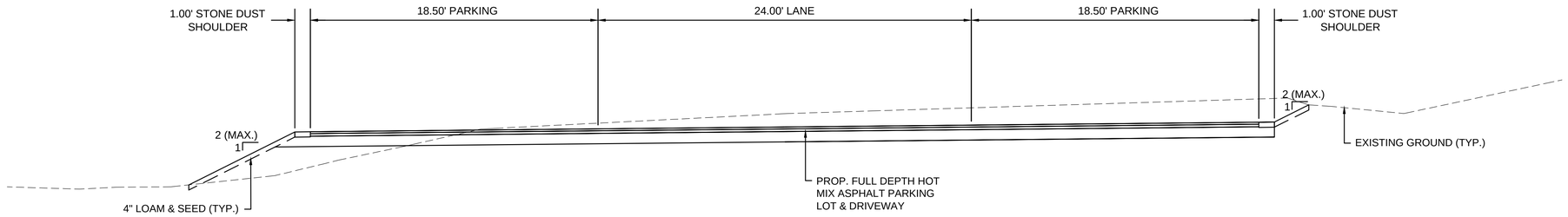

TYPICAL SECTION - PARKING LOT
(MAPLE STREET PARKING)
SCALE 1" = 4'
STA. 0+78± - STA. 2+04± (MAPLE PARKING)

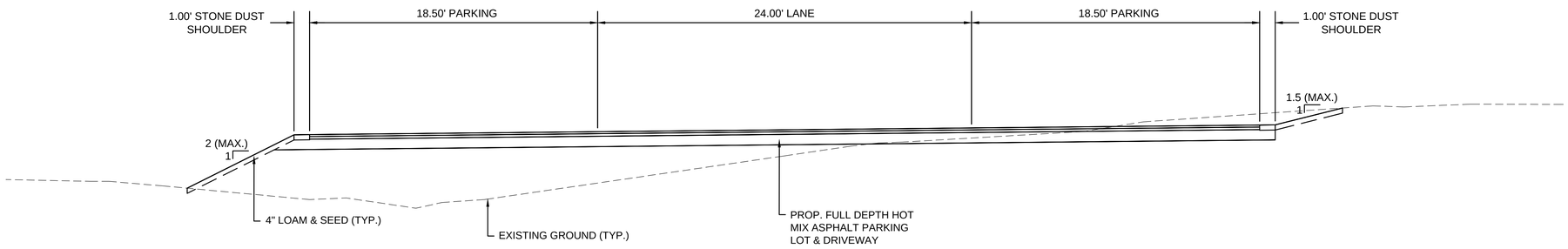

TYPICAL SECTION - PARKING LOT
(ICEHOUSE LANDING)
SCALE 1" = 4'
STA. 0+77± - STA.1+76± (ICEHOUSE LANDING)

HOR. SCALE IN FEET
4 0 4 8
4 0 4 8
VER. SCALE IN FEET

604531_HD(TYP).DWG Plotted on 3-Apr-2015 10:41 AM

TIMBER RAIL FENCE	HIGHWAY GUARD DETAILS	TRAFFIC SIGNAL CONDUIT	WATER SUPPLY ALTERATIONS	DRAINAGE DETAILS
(SEE SHEET 125 FOR DETAILS) STA. 123+75 RT TO STA. 126+75 RT	NONE	NONE	NONE	SEE BELOW

MAYNARD & ACTON
ASSABET RIVER RAIL TRAIL

STATE	FED. AID PROJ. NO.	SHEET NO.	TOTAL SHEETS
MA	-	53	214
PROJECT FILE NO.	604531		

CONSTRUCTION PLANS

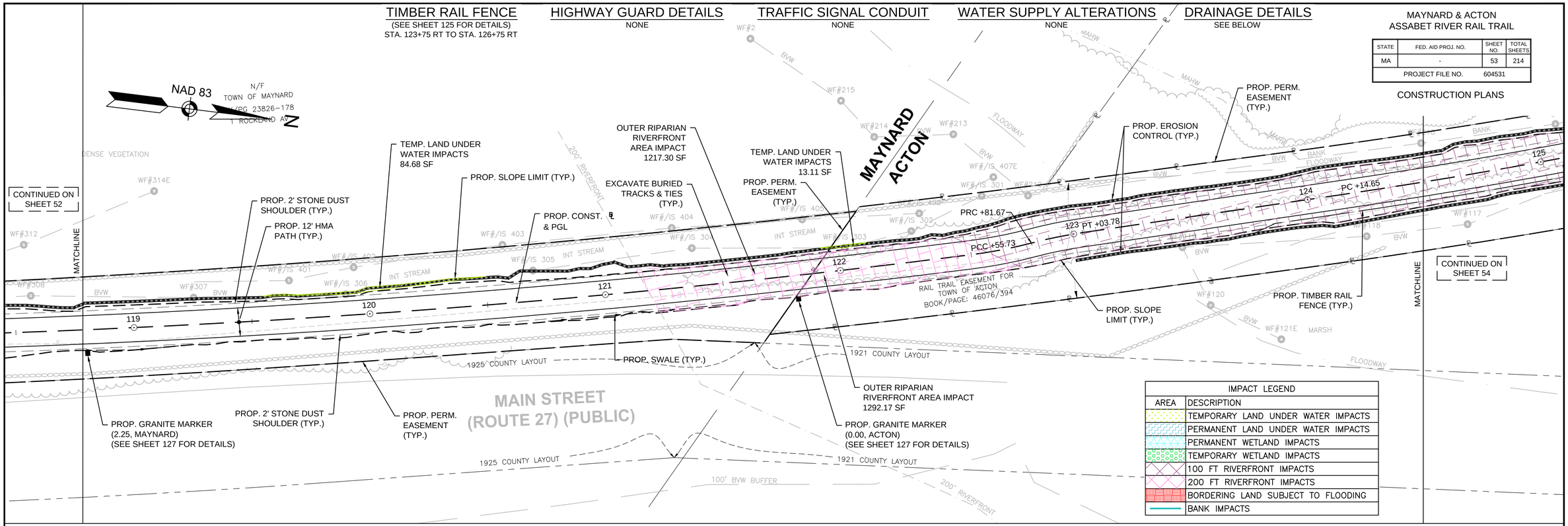

IMPACT LEGEND	
AREA	DESCRIPTION
	TEMPORARY LAND UNDER WATER IMPACTS
	PERMANENT LAND UNDER WATER IMPACTS
	PERMANENT WETLAND IMPACTS
	TEMPORARY WETLAND IMPACTS
	100 FT RIVERFRONT IMPACTS
	200 FT RIVERFRONT IMPACTS
	BORDERING LAND SUBJECT TO FLOODING
	BANK IMPACTS

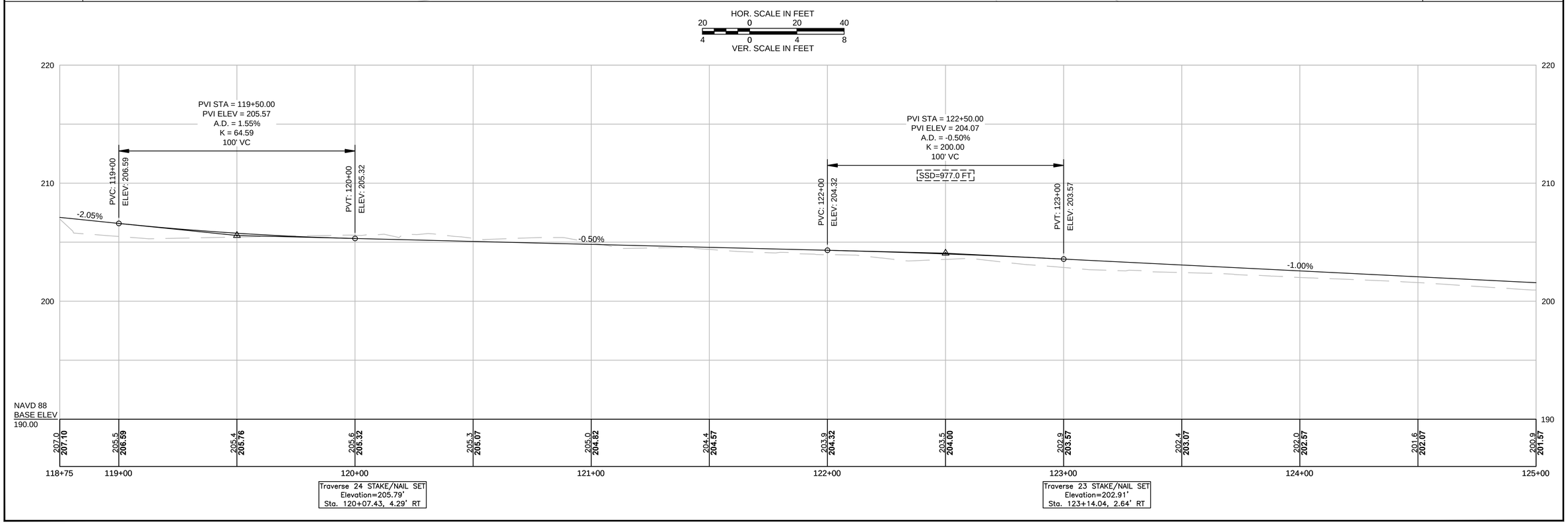

604531_HD(CO).DWG Plotted on 3-Apr-2015 10:42 AM

TIMBER RAIL FENCE
(SEE SHEET 125 FOR DETAILS)
STA. 123+75 RT TO STA. 126+75 RT
STA. 126+00 LT TO STA. 126+75 LT
STA. 128+66 RT TO STA. 129+82 RT
STA. 128+85 LT TO STA. 129+09 LT
STA. 129+19 LT TO STA. 129+97 LT

HIGHWAY GUARD DETAILS
NONE

TRAFFIC SIGNAL CONDUIT
NONE

WATER SUPPLY ALTERATIONS
NONE

DRAINAGE DETAILS
SEE BELOW

MAYNARD & ACTON
ASSABET RIVER RAIL TRAIL

STATE	FED. AID PROJ. NO.	SHEET NO.	TOTAL SHEETS
MA	-	54	214
PROJECT FILE NO.	604531		

CONSTRUCTION PLANS

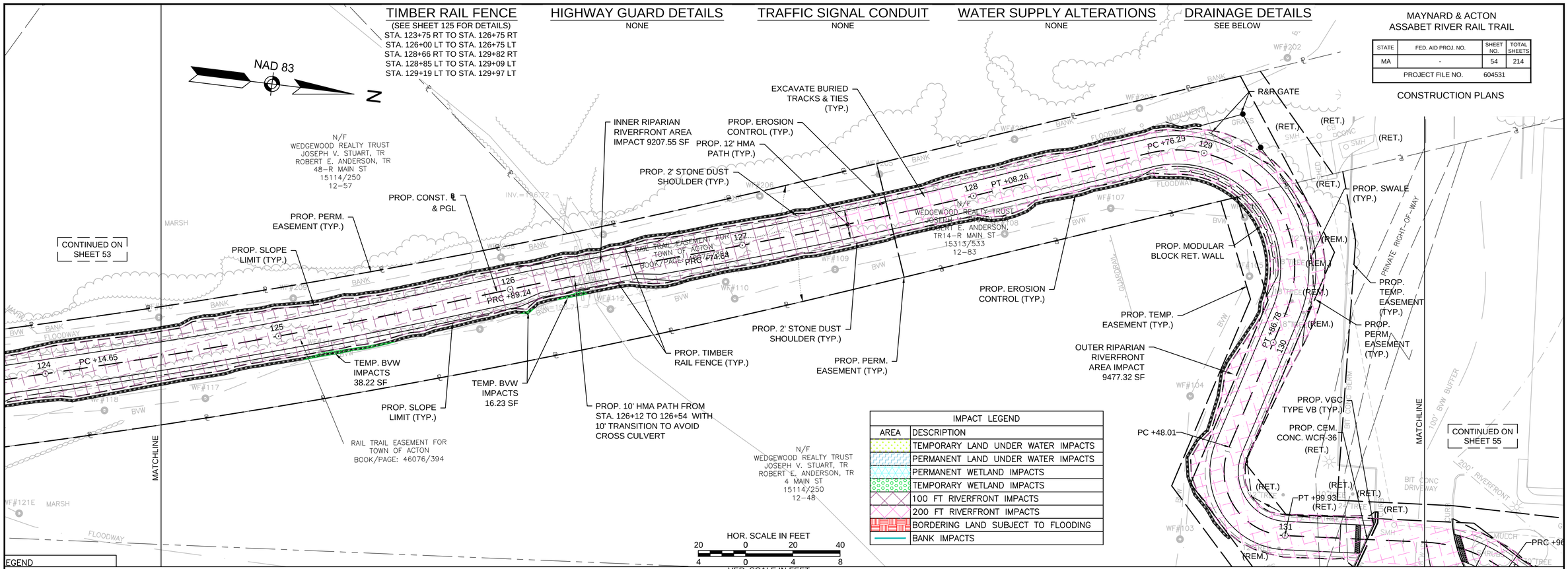

IMPACT LEGEND	
AREA	DESCRIPTION
	TEMPORARY LAND UNDER WATER IMPACTS
	PERMANENT LAND UNDER WATER IMPACTS
	PERMANENT WETLAND IMPACTS
	TEMPORARY WETLAND IMPACTS
	100 FT RIVERFRONT IMPACTS
	200 FT RIVERFRONT IMPACTS
	BORDERING LAND SUBJECT TO FLOODING
	BANK IMPACTS

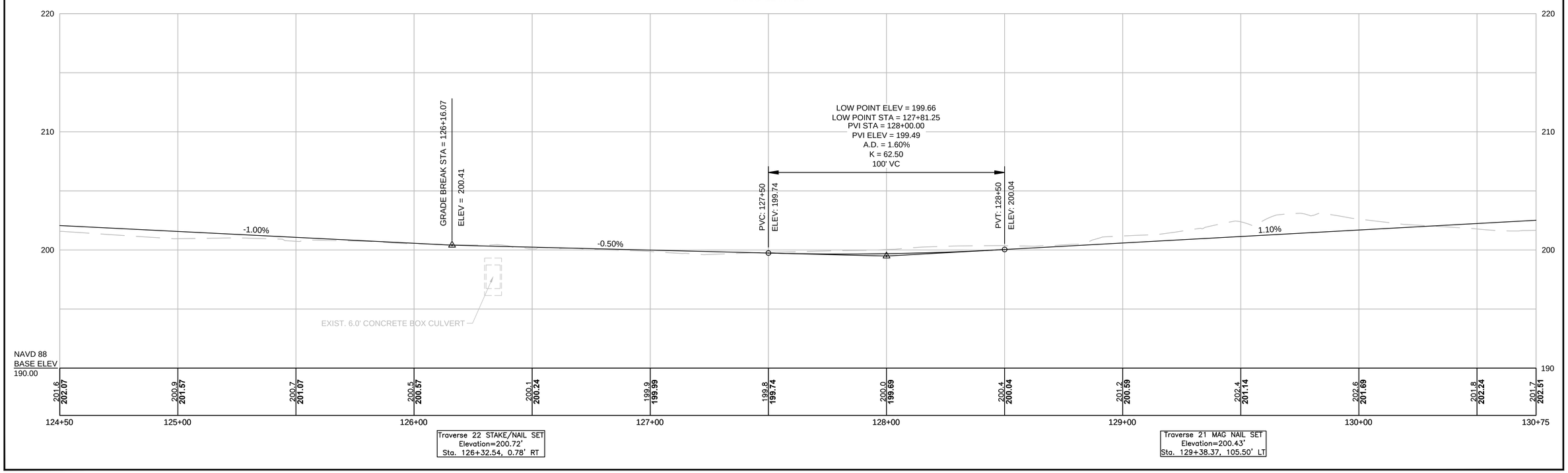

604531_HD(CO).DWG Plotted on 3-Apr-2015 10:42 AM

TIMBER RAIL FENCE
NONE

HIGHWAY GUARD DETAILS
NONE

TRAFFIC SIGNAL CONDUIT
NONE

WATER SUPPLY ALTERATIONS
NONE

DRAINAGE DETAILS
SEE BELOW

MAYNARD & ACTON
ASSABET RIVER RAIL TRAIL

STATE	FED. AID PROJ. NO.	SHEET NO.	TOTAL SHEETS
MA	-	55	214
PROJECT FILE NO.	604531		

CONSTRUCTION PLANS

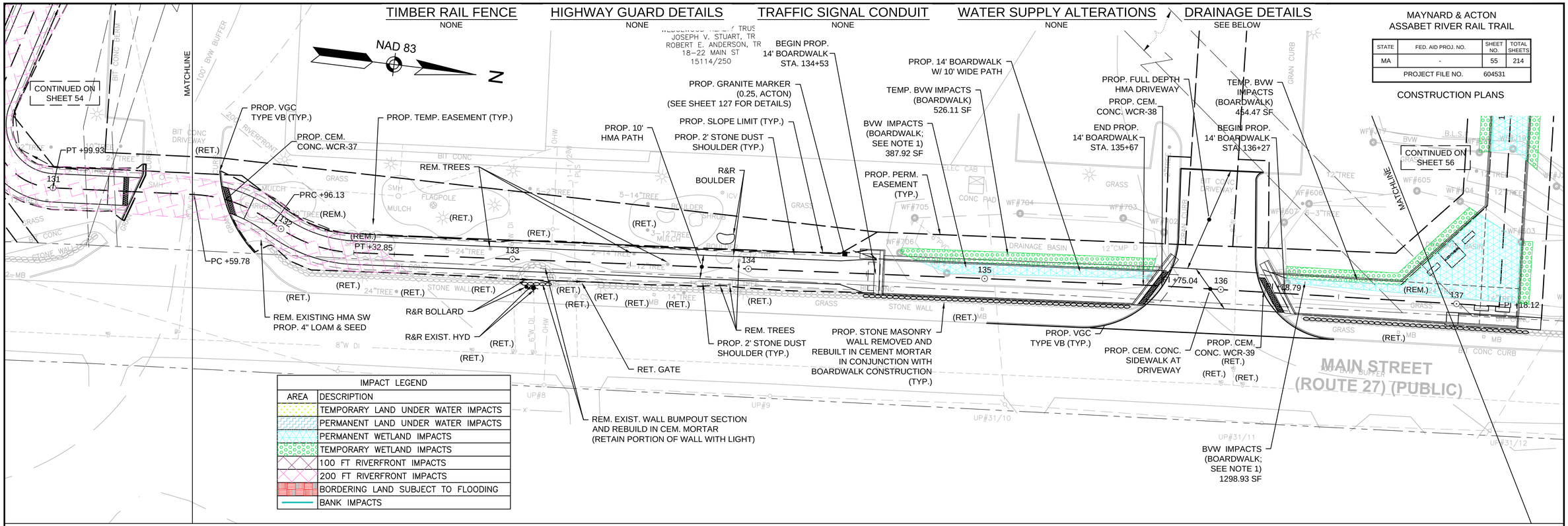

IMPACT LEGEND	
AREA	DESCRIPTION
	TEMPORARY LAND UNDER WATER IMPACTS
	PERMANENT LAND UNDER WATER IMPACTS
	PERMANENT WETLAND IMPACTS
	TEMPORARY WETLAND IMPACTS
	100 FT RIVERFRONT IMPACTS
	200 FT RIVERFRONT IMPACTS
	BORDERING LAND SUBJECT TO FLOODING
	BANK IMPACTS

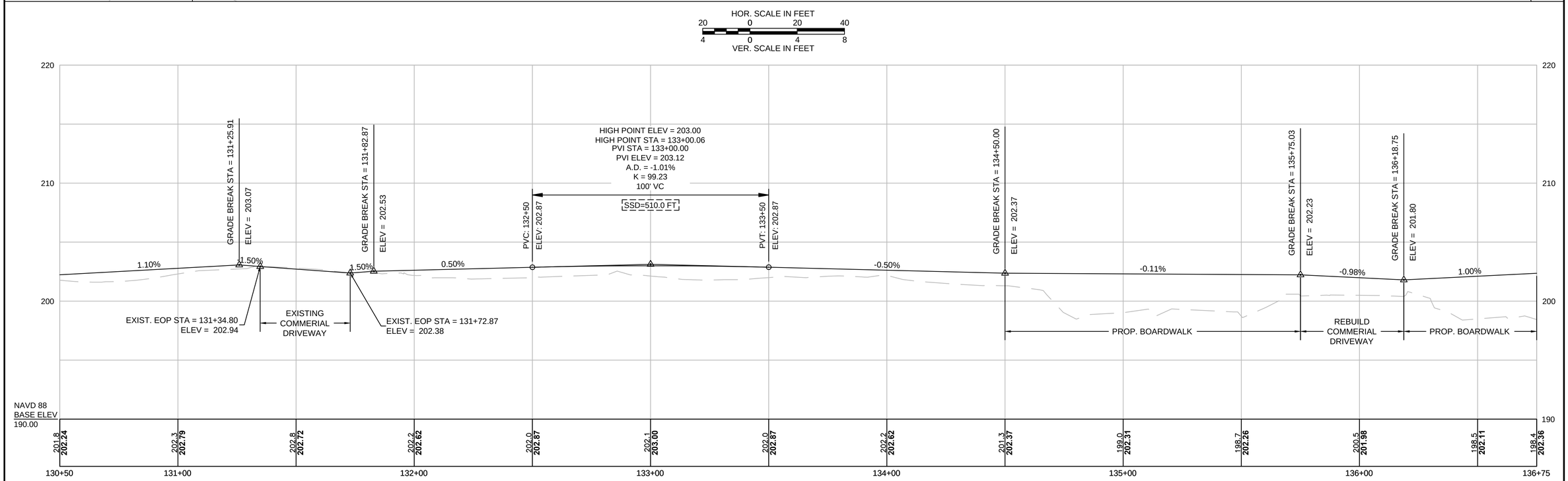

NOTE:
1. NON-JURISDICTIONAL 401/404 FILL.

604531_HD(CO).DWG Plotted on 3-Apr-2015 10:43 AM

TIMBER RAIL FENCE
(SEE SHEET 125 FOR DETAILS)
STA. 140+49 LT TO STA. 141+00 LT
STA. 141+15 LT TO STA. 141+41 LT

HIGHWAY GUARD DETAILS
NONE

TRAFFIC SIGNAL CONDUIT
NONE

WATER SUPPLY ALTERATIONS
NONE

DRAINAGE DETAILS
SEE BELOW

MAYNARD & ACTON
ASSABET RIVER RAIL TRAIL

STATE	FED. AID PROJ. NO.	SHEET NO.	TOTAL SHEETS
MA	-	56	214
PROJECT FILE NO.	604531		

CONSTRUCTION PLANS

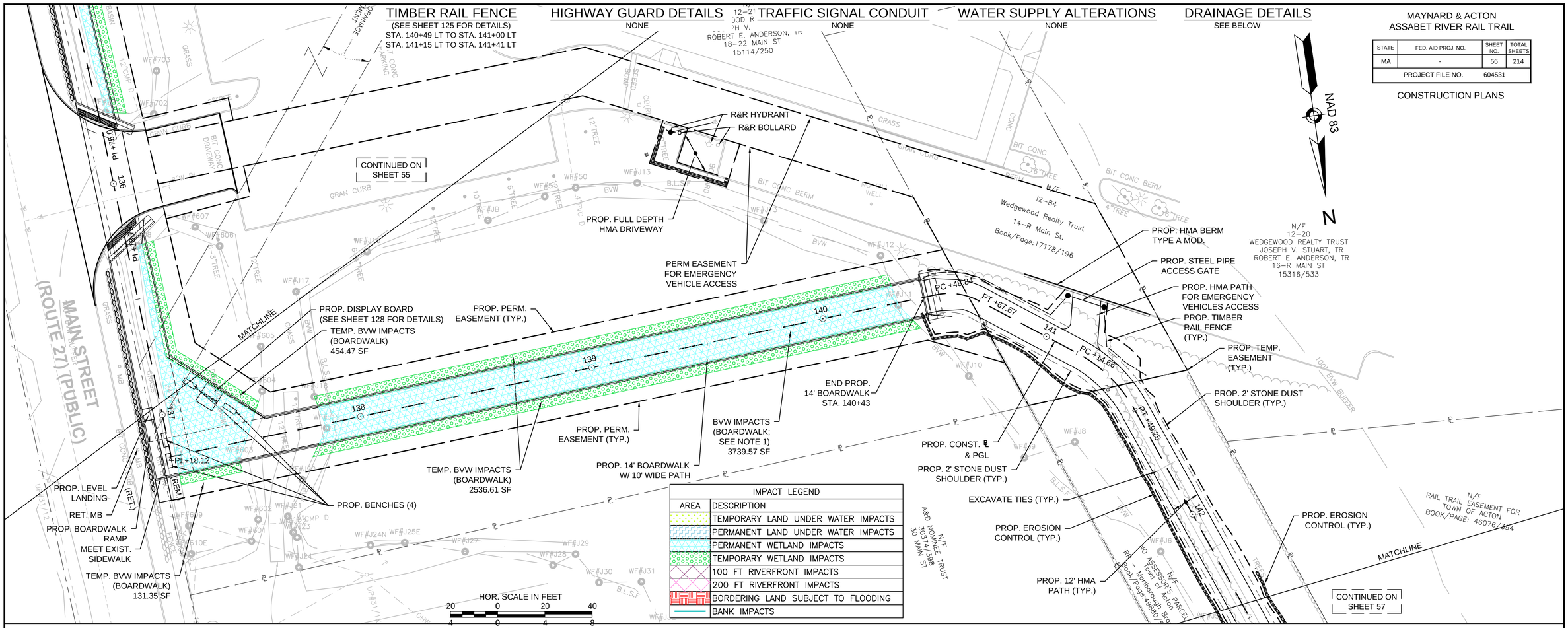

IMPACT LEGEND	
AREA	DESCRIPTION
	TEMPORARY LAND UNDER WATER IMPACTS
	PERMANENT LAND UNDER WATER IMPACTS
	PERMANENT WETLAND IMPACTS
	TEMPORARY WETLAND IMPACTS
	100 FT RIVERFRONT IMPACTS
	200 FT RIVERFRONT IMPACTS
	BORDERING LAND SUBJECT TO FLOODING
	BANK IMPACTS

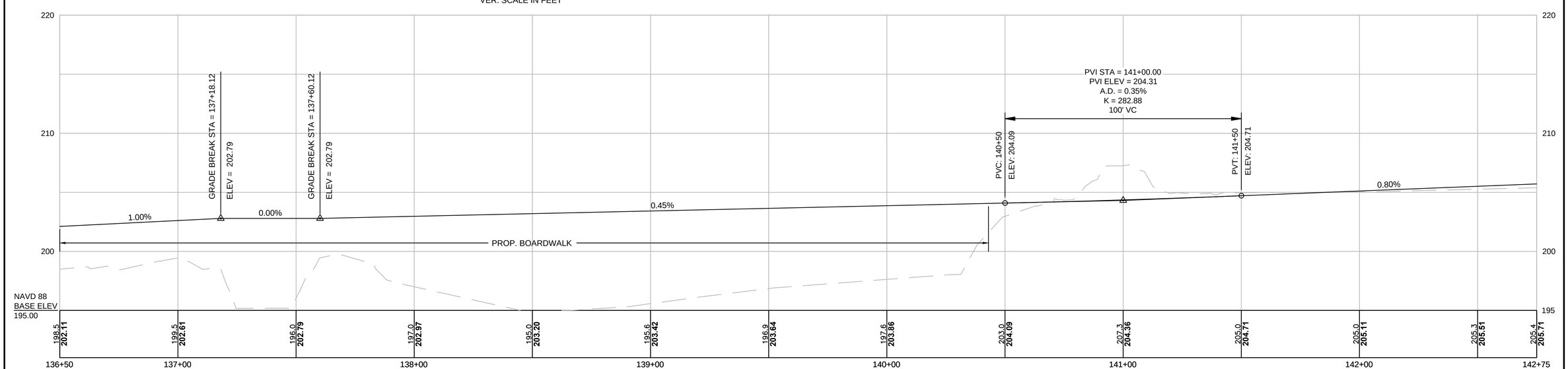

Traverse 18 MAG NAIL SET
Elevation=204.04'
Sta. 141+44.13, 0.28' RT

NOTE:
1. NON-JURISDICTIONAL 401/404 FILL.

604531_HD(CO).DWG Plotted on 3-Apr-2015 10:43 AM

TIMBER RAIL FENCE	HIGHWAY GUARD DETAILS	TRAFFIC SIGNAL CONDUIT	WATER SUPPLY ALTERATIONS	DRAINAGE DETAILS
NONE	NONE	NONE	NONE	SEE BELOW

MAYNARD & ACTON
ASSABET RIVER RAIL TRAIL

STATE	FED. AID PROJ. NO.	SHEET NO.	TOTAL SHEETS
MA	-	57	214
PROJECT FILE NO.	604531		

CONSTRUCTION PLANS

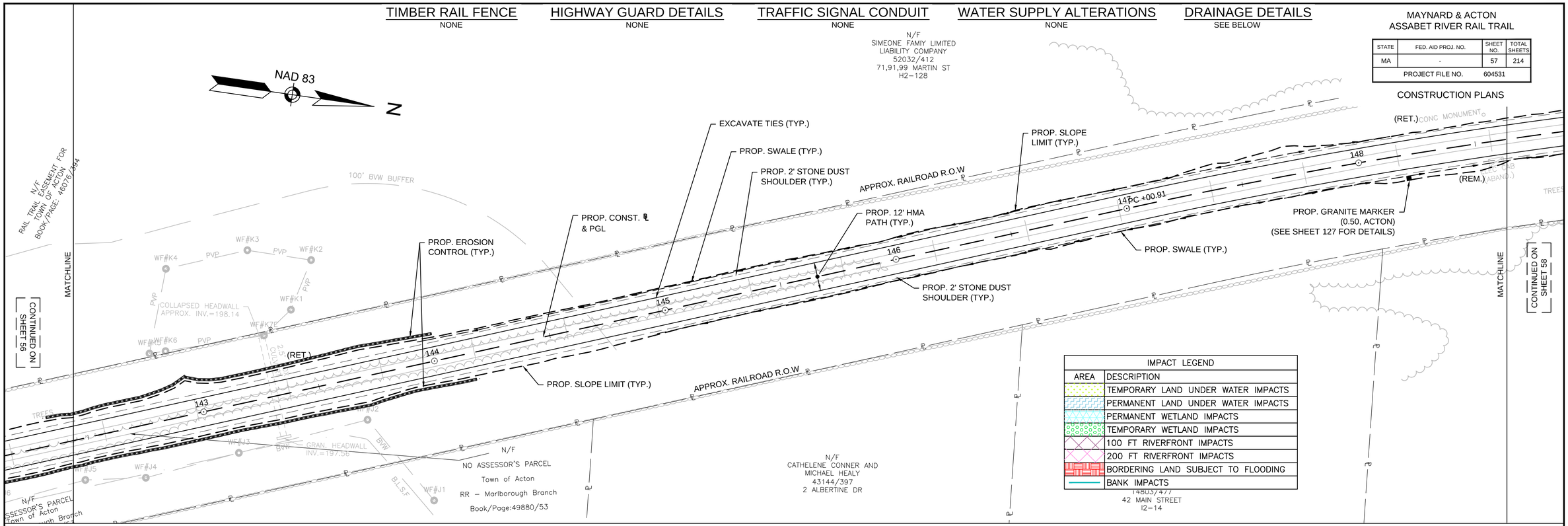

IMPACT LEGEND	
AREA	DESCRIPTION
	TEMPORARY LAND UNDER WATER IMPACTS
	PERMANENT LAND UNDER WATER IMPACTS
	PERMANENT WETLAND IMPACTS
	TEMPORARY WETLAND IMPACTS
	100 FT RIVERFRONT IMPACTS
	200 FT RIVERFRONT IMPACTS
	BORDERING LAND SUBJECT TO FLOODING
	BANK IMPACTS

HOR. SCALE IN FEET
20 0 20 40
4 0 4 8
VER. SCALE IN FEET

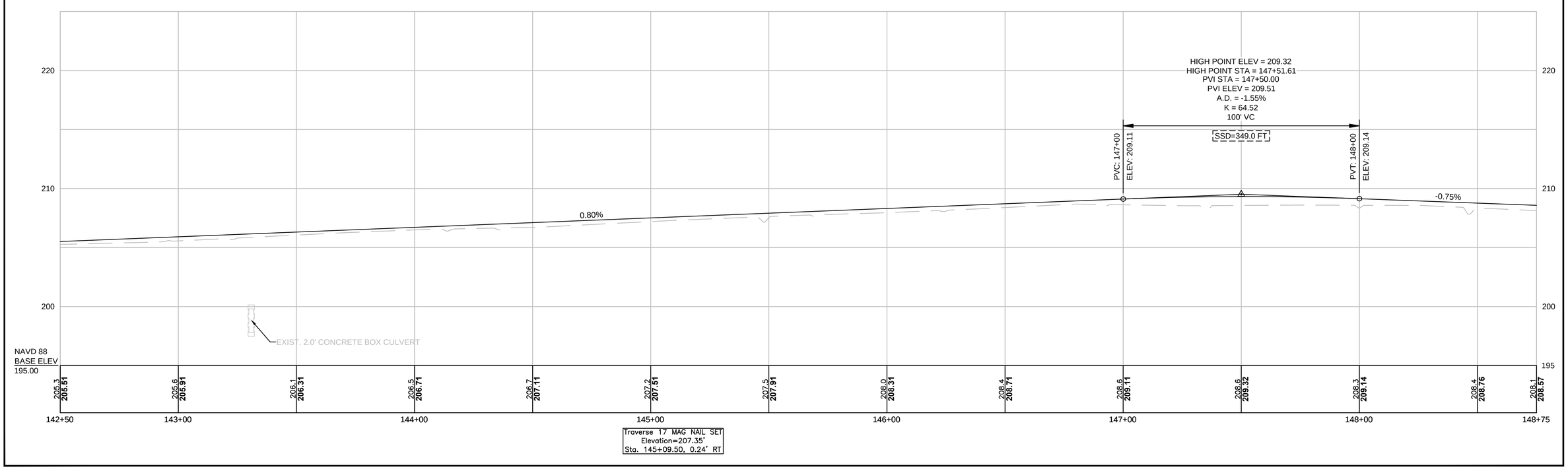

604531_HD(CO).DWG Plotted on 3-Apr-2015 10:44 AM

TIMBER RAIL FENCE
(SEE SHEET 125 FOR DETAILS)
STA. 153+05 LT TO STA. 154+00 LT
STA. 500+12 RT TO STA. 502+78 RT
STA. 500+55 LT TO STA. 502+13 LT

HIGHWAY GUARD DETAILS
NONE

TRAFFIC SIGNAL CONDUIT
NONE

WATER SUPPLY ALTERATIONS
NONE

DRAINAGE DETAILS
SEE BELOW

MAYNARD & ACTON
ASSABET RIVER RAIL TRAIL

STATE	FED. AID PROJ. NO.	SHEET NO.	TOTAL SHEETS
MA	-	58	214
PROJECT FILE NO.	604531		

CONSTRUCTION PLANS

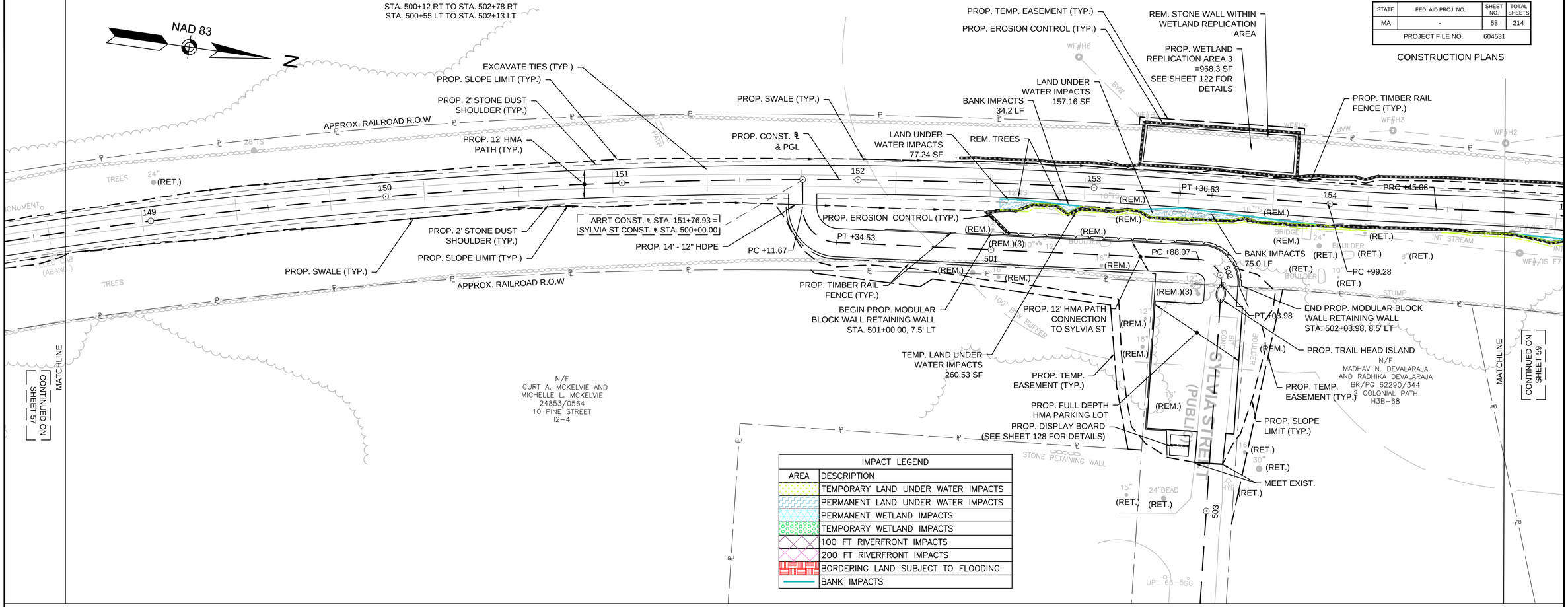

IMPACT LEGEND	
AREA	DESCRIPTION
	TEMPORARY LAND UNDER WATER IMPACTS
	PERMANENT LAND UNDER WATER IMPACTS
	PERMANENT WETLAND IMPACTS
	TEMPORARY WETLAND IMPACTS
	100 FT RIVERFRONT IMPACTS
	200 FT RIVERFRONT IMPACTS
	BORDERING LAND SUBJECT TO FLOODING
	BANK IMPACTS

HOR. SCALE IN FEET
20 0 20 40
4 0 4 8
VER. SCALE IN FEET

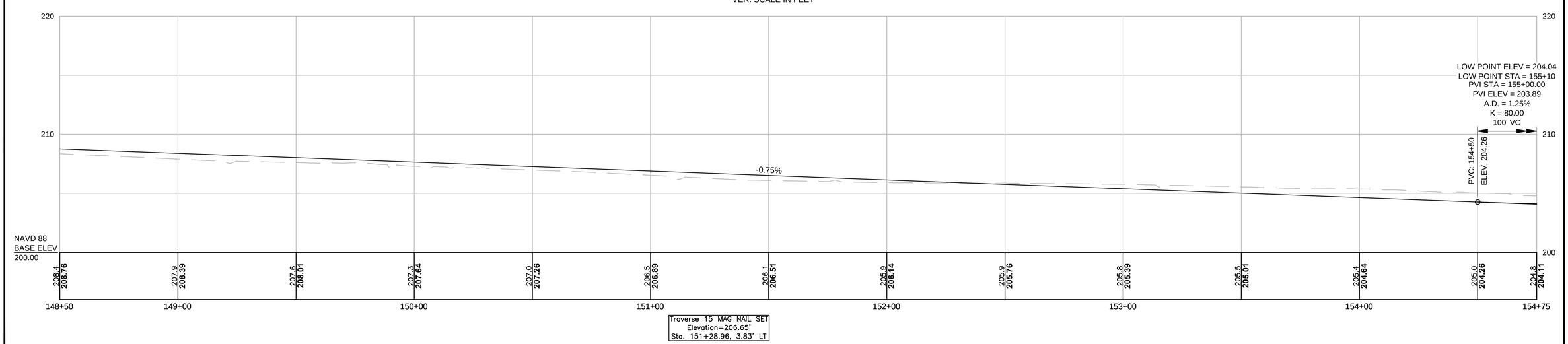

604531_HD(CO).DWG Plotted on 3-Apr-2015 10:44 AM

TIMBER RAIL FENCE	HIGHWAY GUARD DETAILS	TRAFFIC SIGNAL CONDUIT	WATER SUPPLY ALTERATIONS	DRAINAGE DETAILS
NONE	NONE	NONE	NONE	SEE BELOW

MAYNARD & ACTON
ASSABET RIVER RAIL TRAIL

STATE	FED. AID PROJ. NO.	SHEET NO.	TOTAL SHEETS
MA	-	59	214
PROJECT FILE NO.	604531		

CONSTRUCTION PLANS

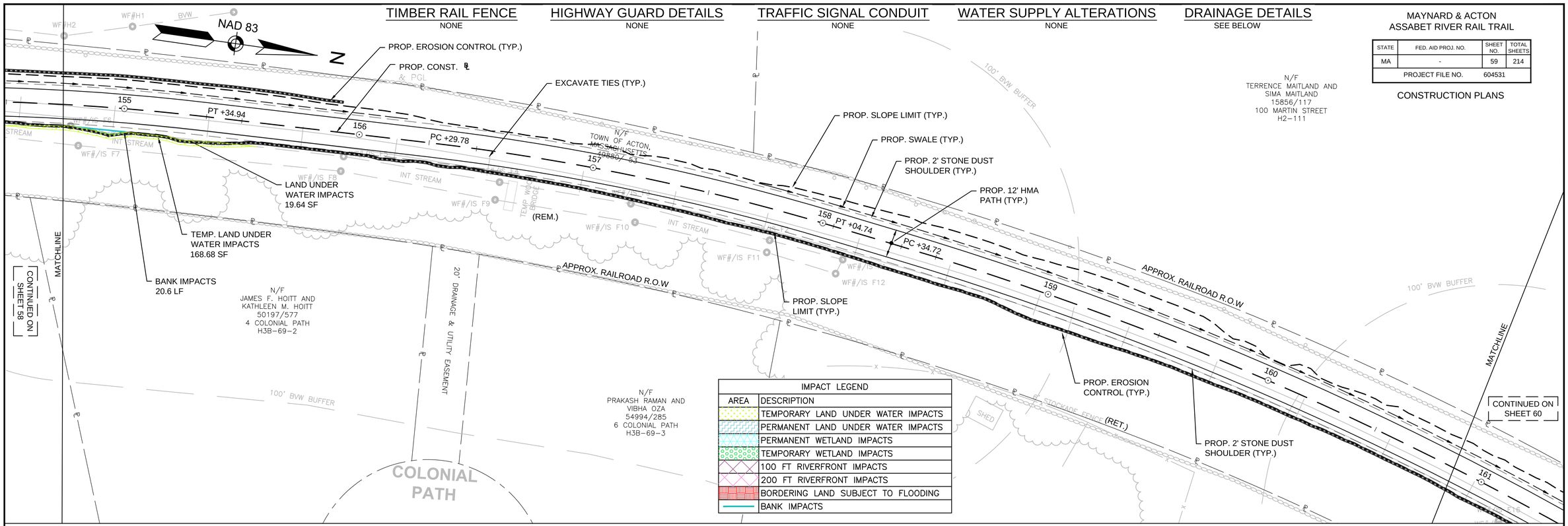

IMPACT LEGEND	
AREA	DESCRIPTION
	TEMPORARY LAND UNDER WATER IMPACTS
	PERMANENT LAND UNDER WATER IMPACTS
	PERMANENT WETLAND IMPACTS
	TEMPORARY WETLAND IMPACTS
	100 FT RIVERFRONT IMPACTS
	200 FT RIVERFRONT IMPACTS
	BORDERING LAND SUBJECT TO FLOODING
	BANK IMPACTS

HOR. SCALE IN FEET
20 0 20 40
4 0 4 8
VER. SCALE IN FEET

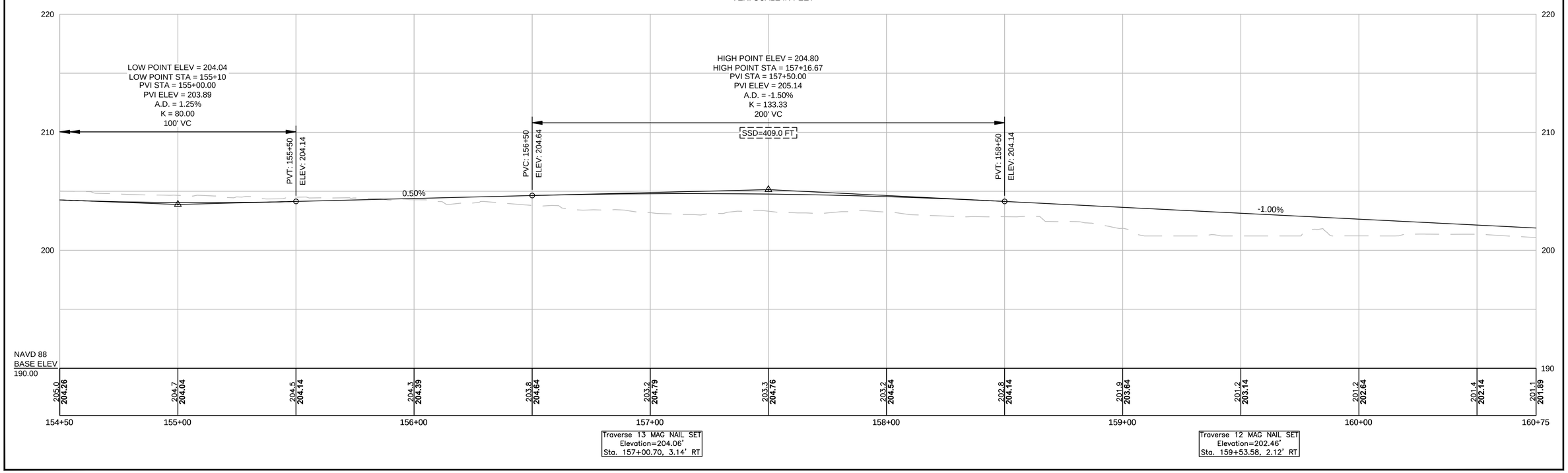

604531_HD(CO).DWG Plotted on 3-Apr-2015 10:45 AM

TIMBER RAIL FENCE	HIGHWAY GUARD DETAILS	TRAFFIC SIGNAL CONDUIT	WATER SUPPLY ALTERATIONS	DRAINAGE DETAILS
(SEE SHEET 125 FOR DETAILS) STA. 163+04 RT TO STA. 166+35 RT	NONE	NONE	NONE	SEE BELOW

MAYNARD & ACTON
ASSABET RIVER RAIL TRAIL

STATE	FED. AID PROJ. NO.	SHEET NO.	TOTAL SHEETS
MA	-	60	214
PROJECT FILE NO.	604531		

CONSTRUCTION PLANS

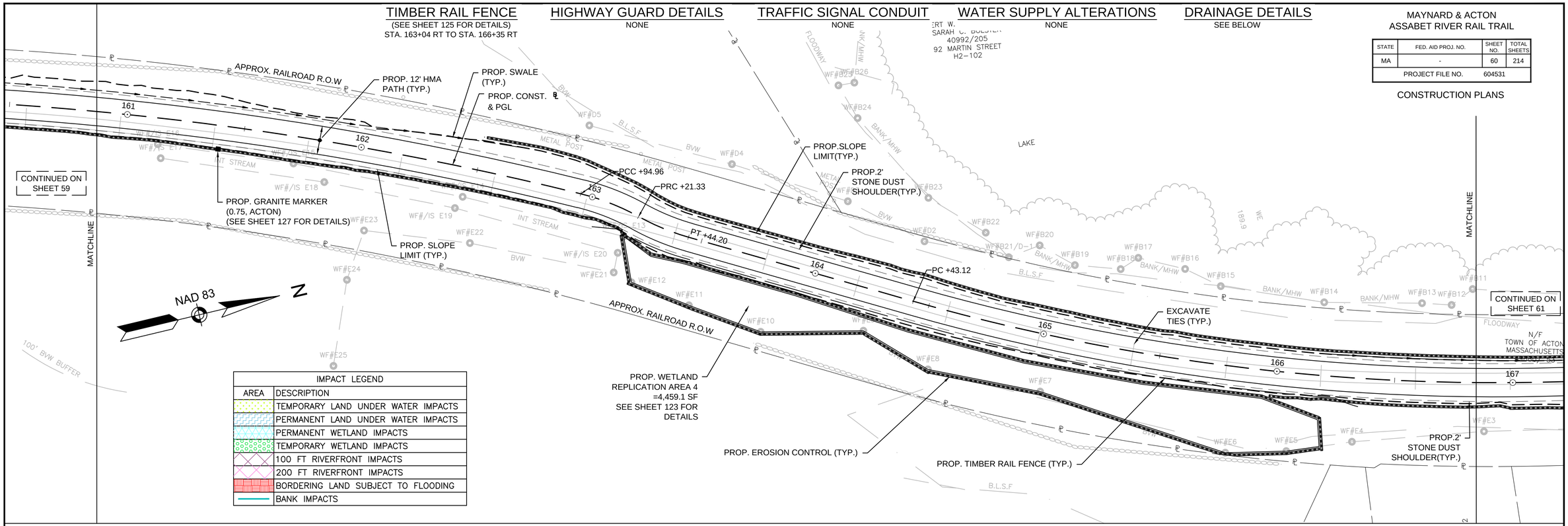

IMPACT LEGEND	
AREA	DESCRIPTION
	TEMPORARY LAND UNDER WATER IMPACTS
	PERMANENT LAND UNDER WATER IMPACTS
	PERMANENT WETLAND IMPACTS
	TEMPORARY WETLAND IMPACTS
	100 FT RIVERFRONT IMPACTS
	200 FT RIVERFRONT IMPACTS
	BORDERING LAND SUBJECT TO FLOODING
	BANK IMPACTS

HOR. SCALE IN FEET
20 0 20 40
4 0 4 8
VER. SCALE IN FEET

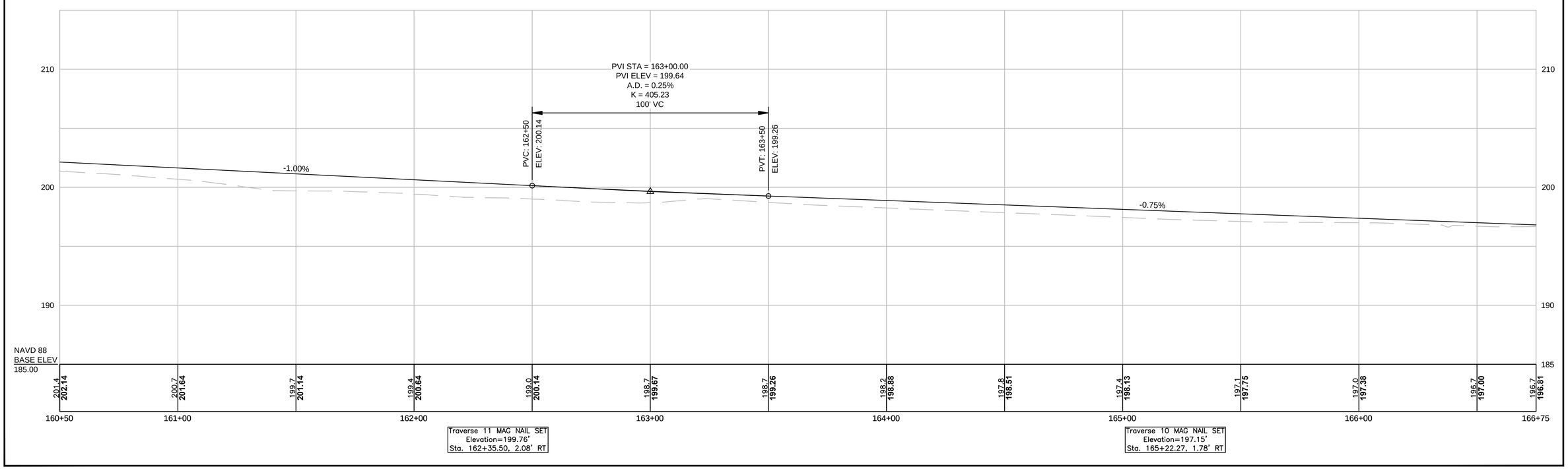

604531_HD(CO).DWG Plotted on 3-Apr-2015 10:45 AM

TIMBER RAIL FENCE	HIGHWAY GUARD DETAILS	TRAFFIC SIGNAL CONDUIT	WATER SUPPLY ALTERATIONS	DRAINAGE DETAILS
NONE	NONE	NONE	NONE	SEE BELOW

MAYNARD & ACTON
ASSABET RIVER RAIL TRAIL

STATE	FED. AID PROJ. NO.	SHEET NO.	TOTAL SHEETS
MA	-	61	214
PROJECT FILE NO.	604531		

CONSTRUCTION PLANS

IMPACT LEGEND	
AREA	DESCRIPTION
	TEMPORARY LAND UNDER WATER IMPACTS
	PERMANENT LAND UNDER WATER IMPACTS
	PERMANENT WETLAND IMPACTS
	TEMPORARY WETLAND IMPACTS
	100 FT RIVERFRONT IMPACTS
	200 FT RIVERFRONT IMPACTS
	BORDERING LAND SUBJECT TO FLOODING
	BANK IMPACTS

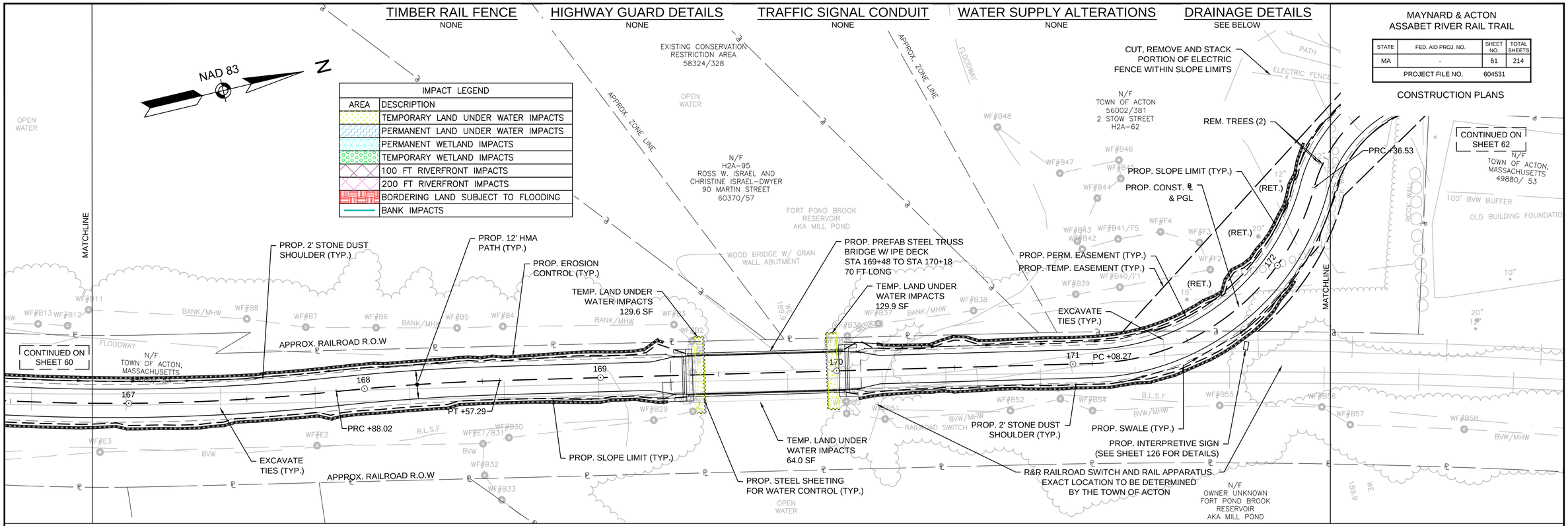

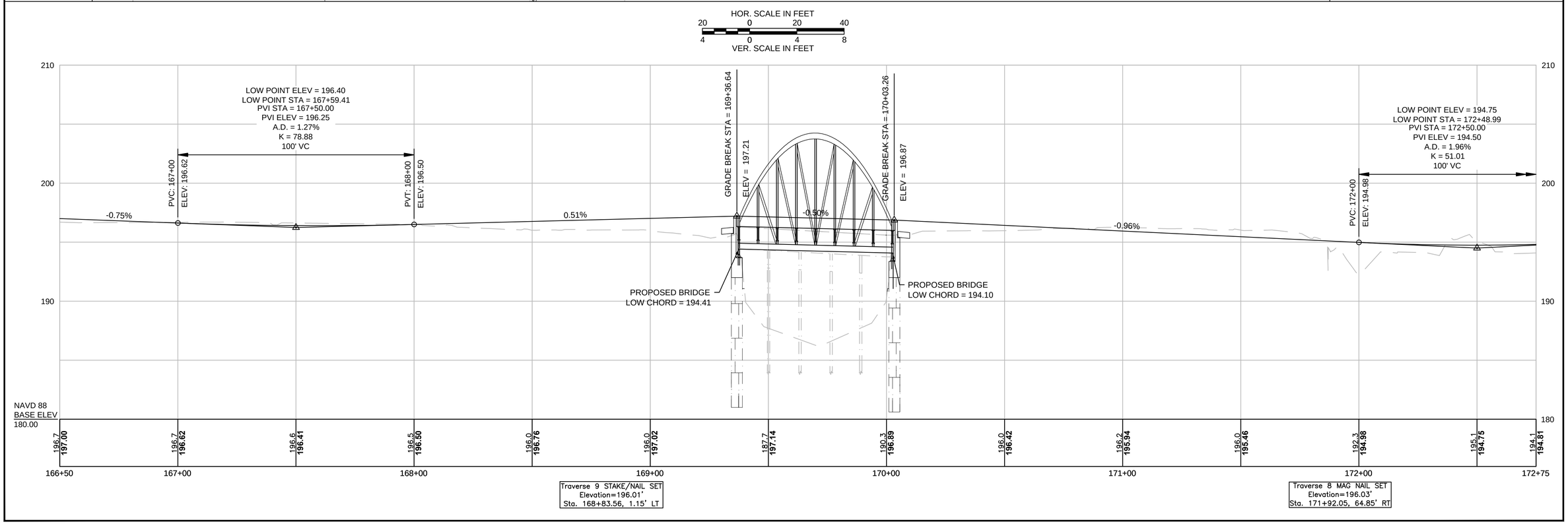

604531_HD(CO).DWG Plotted on 3-Apr-2015 10:46 AM

TRAFFIC SIGNAL CONDUIT
NONE

TIMBER RAIL FENCE
NONE

HIGHWAY GUARD DETAILS
NONE

WATER SUPPLY ALTERATIONS
NONE

DRAINAGE DETAILS
SEE BELOW

MAYNARD & ACTON
ASSABET RIVER RAIL TRAIL

STATE	FED. AID PROJ. NO.	SHEET NO.	TOTAL SHEETS
MA	-	62	214
PROJECT FILE NO.	604531		

CONSTRUCTION PLANS

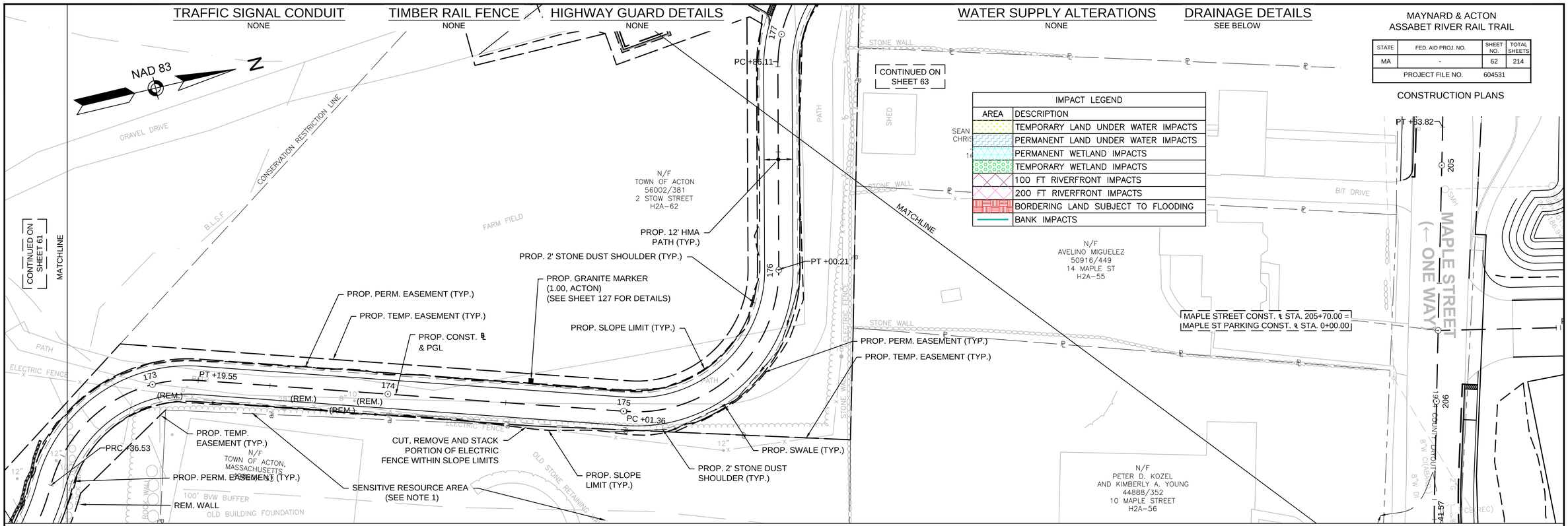

NOTE:
1. THE CONTRACTOR SHALL AVOID & PROTECT THIS SENSITIVE RESOURCE AREA DURING CONSTRUCTION.

HOR. SCALE IN FEET
20 0 20 40
4 0 4 8
VER. SCALE IN FEET

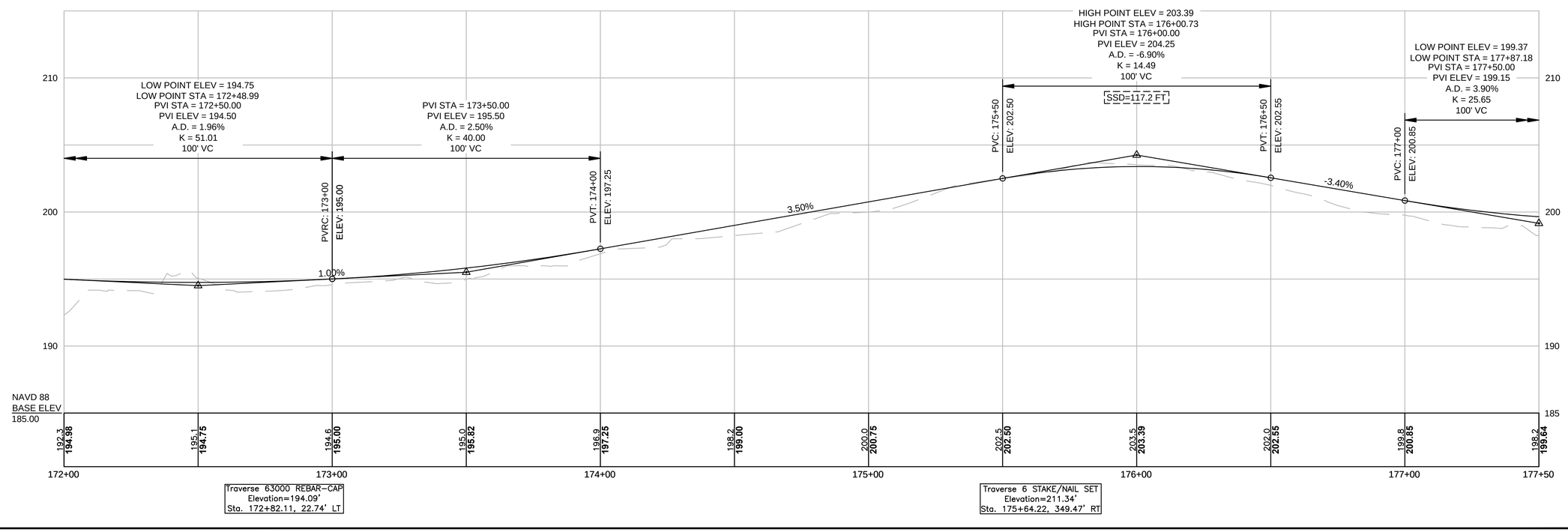

604531_HD(CO).DWG Plotted on 3-Apr-2015 10:46 AM

TIMBER RAIL FENCE
(SEE SHEET 125 FOR DETAILS)
STA. 177+49 RT TO STA. 179+87 RT

HIGHWAY GUARD DETAILS
NONE

TRAFFIC SIGNAL CONDUIT
NONE

WATER SUPPLY ALTERATIONS
NONE

DRAINAGE DETAILS
SEE BELOW

MAYNARD & ACTON
ASSABET RIVER RAIL TRAIL

STATE	FED. AID PROJ. NO.	SHEET NO.	TOTAL SHEETS
MA	-	63	214
PROJECT FILE NO.	604531		

CONSTRUCTION PLANS

IMPACT LEGEND	
AREA	DESCRIPTION
	TEMPORARY LAND UNDER WATER IMPACTS
	PERMANENT LAND UNDER WATER IMPACTS
	PERMANENT WETLAND IMPACTS
	TEMPORARY WETLAND IMPACTS
	100 FT RIVERFRONT IMPACTS
	200 FT RIVERFRONT IMPACTS
	BORDERING LAND SUBJECT TO FLOODING
	BANK IMPACTS

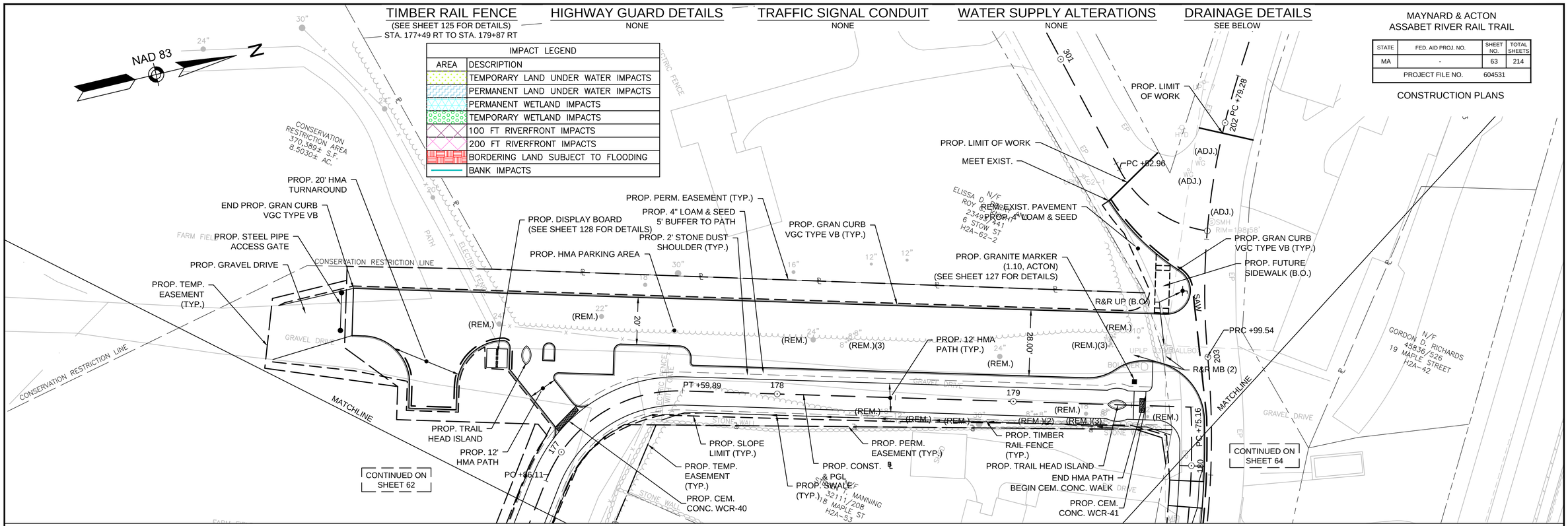

HOR. SCALE IN FEET
20 0 20 40
4 0 4 8
VER. SCALE IN FEET

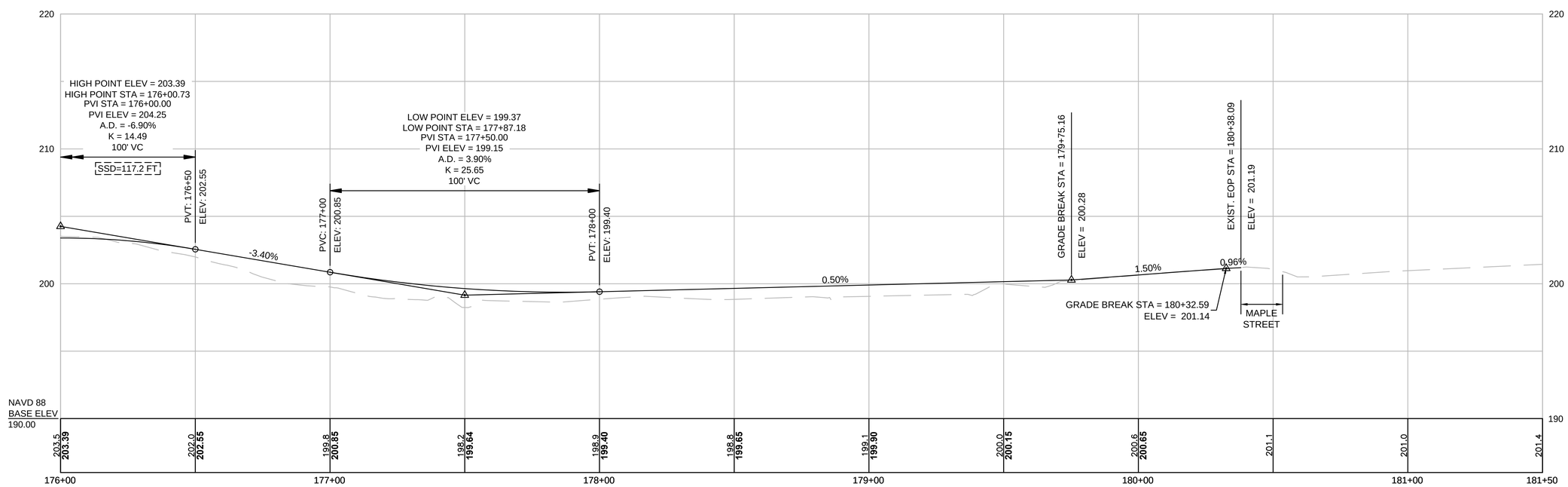

604531_HD(CO).DWG Plotted on 3-Apr-2015 10:47 AM

TIMBER RAIL FENCE	HIGHWAY GUARD DETAILS	TRAFFIC SIGNAL CONDUIT	WATER SUPPLY ALTERATIONS	DRAINAGE DETAILS
NONE	STA. 206+68 LT TO STA. 207+09 LT - ITEM 620.4 STA. 207+09 LT TO STA. 208+58 LT - ITEM 620.1 STA. 208+58 LT TO STA. 208+75 LT - ITEM 620.3	NONE	NONE	SEE BELOW

MAYNARD & ACTON
ASSABET RIVER RAIL TRAIL

STATE	FED. AID PROJ. NO.	SHEET NO.	TOTAL SHEETS
MA	-	64	214
PROJECT FILE NO.	604531		

CONSTRUCTION PLANS

IMPACT LEGEND	
AREA	DESCRIPTION
	TEMPORARY LAND UNDER WATER IMPACTS
	PERMANENT LAND UNDER WATER IMPACTS
	PERMANENT WETLAND IMPACTS
	TEMPORARY WETLAND IMPACTS
	100 FT RIVERFRONT IMPACTS
	200 FT RIVERFRONT IMPACTS
	BORDERING LAND SUBJECT TO FLOODING
	BANK IMPACTS

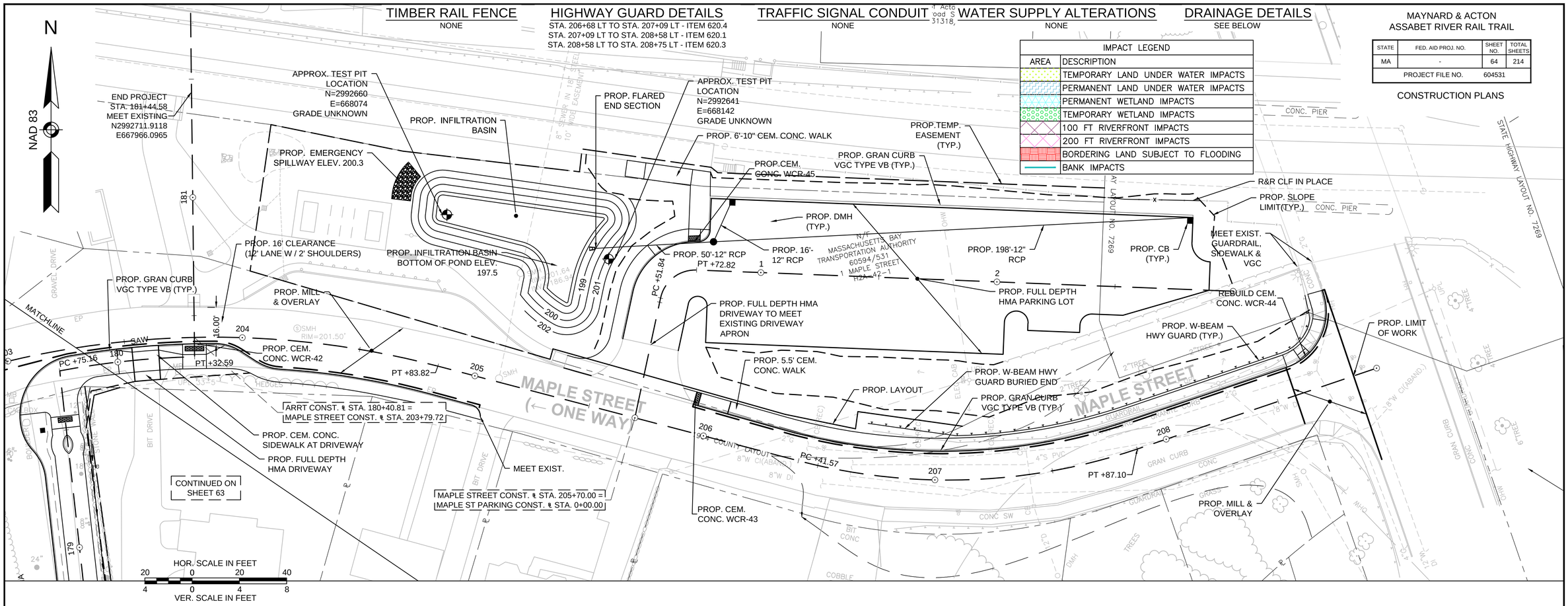

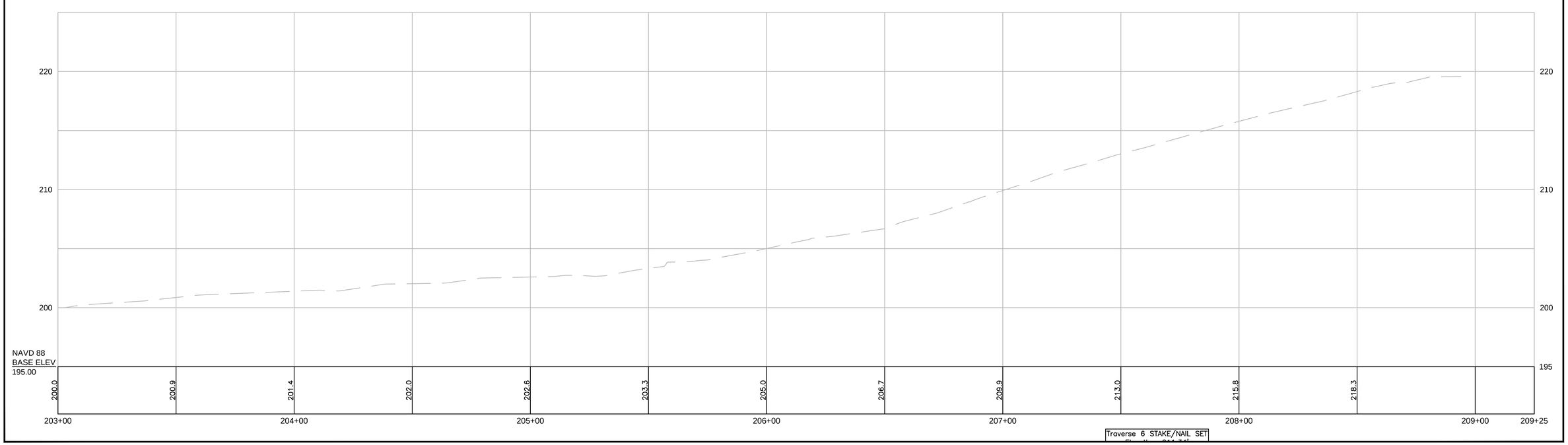

604531_HD(CO).DWG Plotted on 3-Apr-2015 10:47 AM

MAYNARD & ACTON
ASSABET RIVER RAIL TRAIL

STATE	FED. AID PROJ. NO.	SHEET NO.	TOTAL SHEETS
MA	-	122	214
PROJECT FILE NO.	604531		

WETLAND REPLICATION PLANS AND DETAILS

604531_HD(WET).DWG Plotted on 3-Apr-2015 10:48 AM

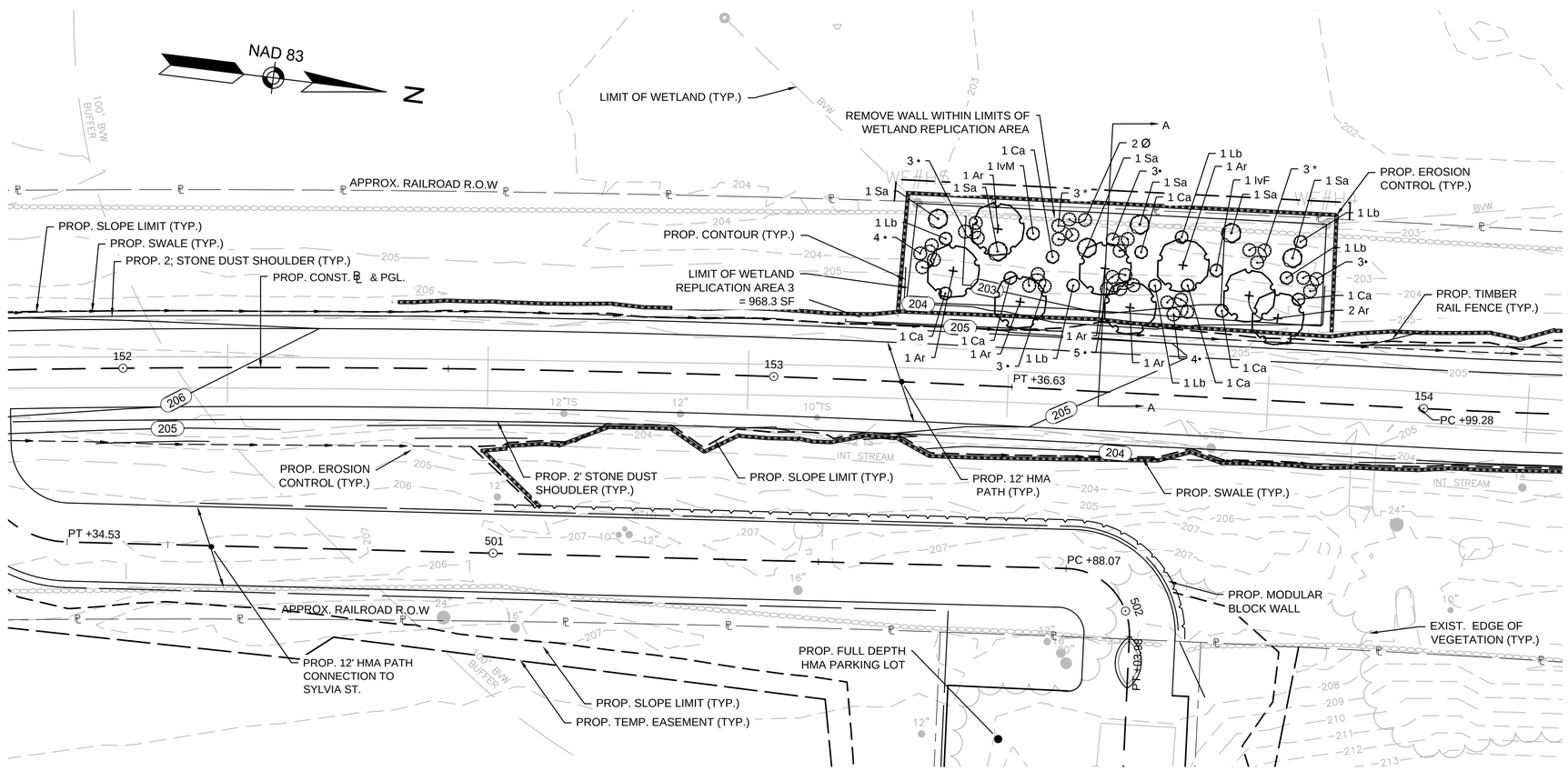

PLANTING PLAN

0 10 20 30 40
SCALE: 1" = 10'

PLANTING LEGEND

- PROPOSED DECIDUOUS SHRUB
- PROPOSED DECIDUOUS TREE
- PROPOSED FERN/ HERB ACEOUS

NOTES

1. FOR BORDERING VEGETATED WETLAND IMPACTS SEE SHEETS 31 -66.
2. SEE SPECIAL PROVISIONS FOR PLANTING INSTALLATION INSTRUCTIONS.

PLANTING SPECIFICATIONS: AREA 3

PLANT TYPE	SYMBOL	SCIENTIFIC NAME	COMMON NAME	SIZE	QTY
SHRUBS	Ca	CLETHRA ALNIFOLIA	SUMMERSWEET SHRUB	18-24"	7
	IvF	ILEX VERTICILLATA	WINTERBERRY- FEMALE	24-30"	1
	IvM	ILEX VERTICILLATA	WINTERBERRY- MALE	24-30"	1
	Sa	CORNUS AMOMUM	SILKY DOGWOOD	2-3'	6
	Lb	LINDERA BENZOIN	SPICEBUSH	15-18"	6
TREES	Ar	ACER RUBRUM	RED MAPLE	1"-1.5" CAL	8
FERN/ HERB ACEOUS	•	OSMUNDA CINNAMOMEA	CINNAMON FERN	GALLON	25
	*	ONOCLEA SENSIBILIS	SENSITIVE FERN	GALLON	6
	Ø	OSMUNDA REGALIS	ROYAL FERN	GALLON	2

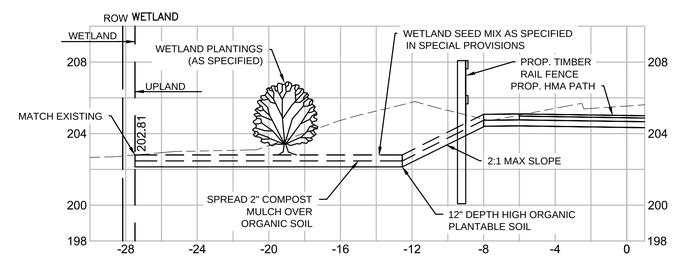

TYPICAL CROSS SECTION OF WETLAND REPLICATION AREA 3 SECTION A-A

HOR. SCALE IN FEET
4 0 4 8
4 0 4 8
VER. SCALE IN FEET

MAYNARD & ACTON
ASSABET RIVER RAIL TRAIL

STATE	FED. AID PROJ. NO.	SHEET NO.	TOTAL SHEETS
MA	-	123	214
PROJECT FILE NO.	604531		

WETLAND REPLICATION PLANS AND DETAILS

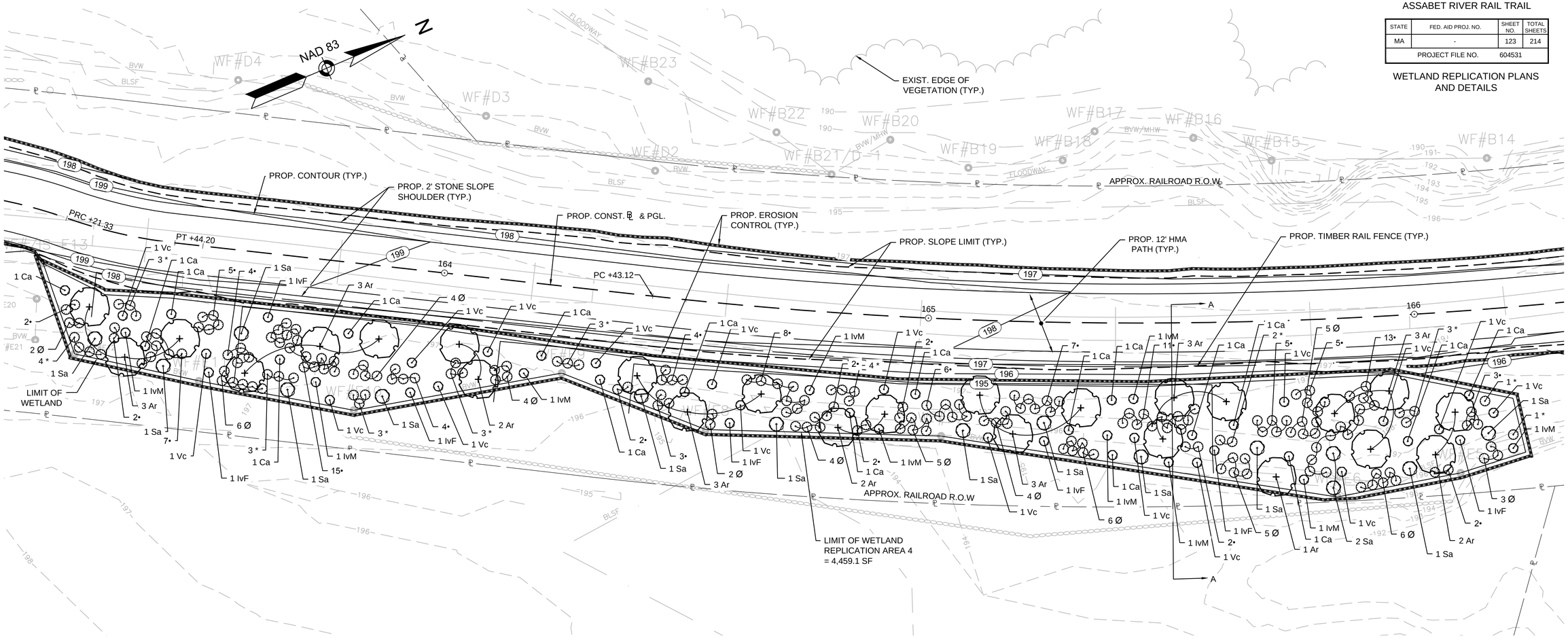

PLANTING PLAN

0 10 20 30 40

SCALE: 1" = 10'

PLANTING SPECIFICATIONS: AREA 4

PLANT TYPE	SYMBOL	SCIENTIFIC NAME	COMMON NAME	SIZE	QTY
SHRUBS	Ca	CLETHRA ALNIFOLIA	SUMMERSWEET SHRUB	18-24"	19
	IvF	ILEX VERTICILLATA	WINTERBERRY- FEMALE	24-30"	7
	IvM	ILEX VERTICILLATA	WINTERBERRY- MALE	24-30"	10
	Sa	CORNUS AMOMUM	SILKY DOGWOOD	2-3'	15
	Vc	VACCINIUM CORYMBOSUM	BLUEBERRY HIGHBUSH	18-24"	18
TREES	Ar	ACER RUBRUM	RED MAPLE	1"-1.5" CAL	25
FERN/ HERB ACEOUS	•	OSMUNDA CINNAMOMEA	CINNAMON FERN	GALLON	116
	*	ONOCLEA SENSIBILIS	SENSITIVE FERN	GALLON	30
	Ø	OSMUNDA REGALIS	ROYAL FERN	GALLON	57

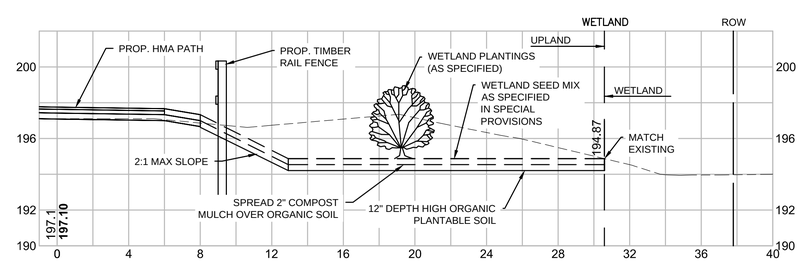

TYPICAL CROSS SECTION OF WETLAND REPLICATION AREA 4 SECTION A-A

HOR. SCALE IN FEET
4 0 4 8
4 0 4 8
VER. SCALE IN FEET

PLANTING LEGEND

- PROPOSED DECIDUOUS SHRUB
- PROPOSED DECIDUOUS TREE
- PROPOSED FERN/ HERB ACEOUS

NOTES

1. FOR BORDERING VEGETATED WETLAND IMPACTS SEE SHEETS 31 -66.
2. SEE SPECIAL PROVISIONS FOR PLANTING INSTALLATION INSTRUCTIONS.

604531_HD(WET).DWG Plotted on 3-Apr-2015 10:49 AM

MAYNARD & ACTON
ASSABET RIVER RAIL TRAIL

STATE	FED. AID PROJ. NO.	SHEET NO.	TOTAL SHEETS
MA	-	124	214
PROJECT FILE NO.	604531		

CONSTRUCTION DETAILS

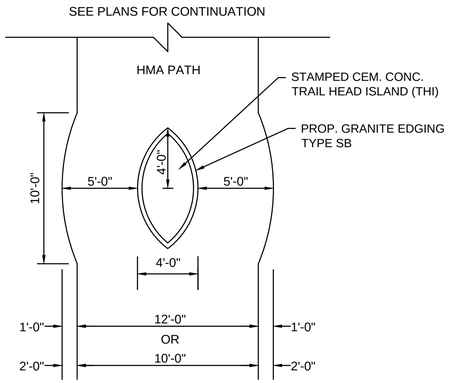

TRAIL HEAD ISLAND DETAIL
(TO BE USED AT PATH OPENINGS NOT ABUTTING ROADWAYS)
N.T.S.

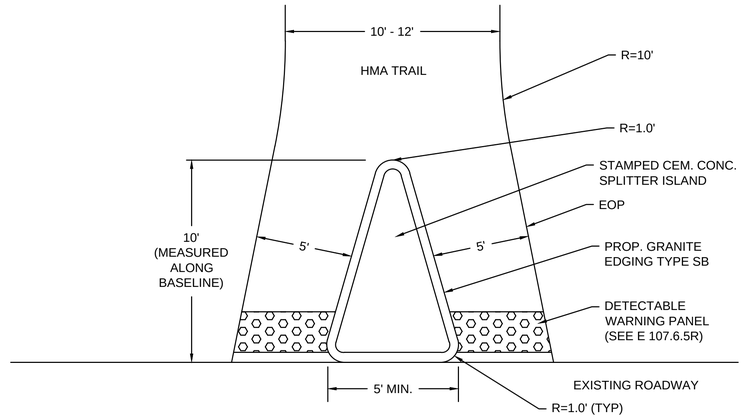

STAMPED CEM. CONC. SPLITTER ISLAND
(TO BE USED AT PATH OPENINGS ABUTTING ROADWAYS)
N.T.S.

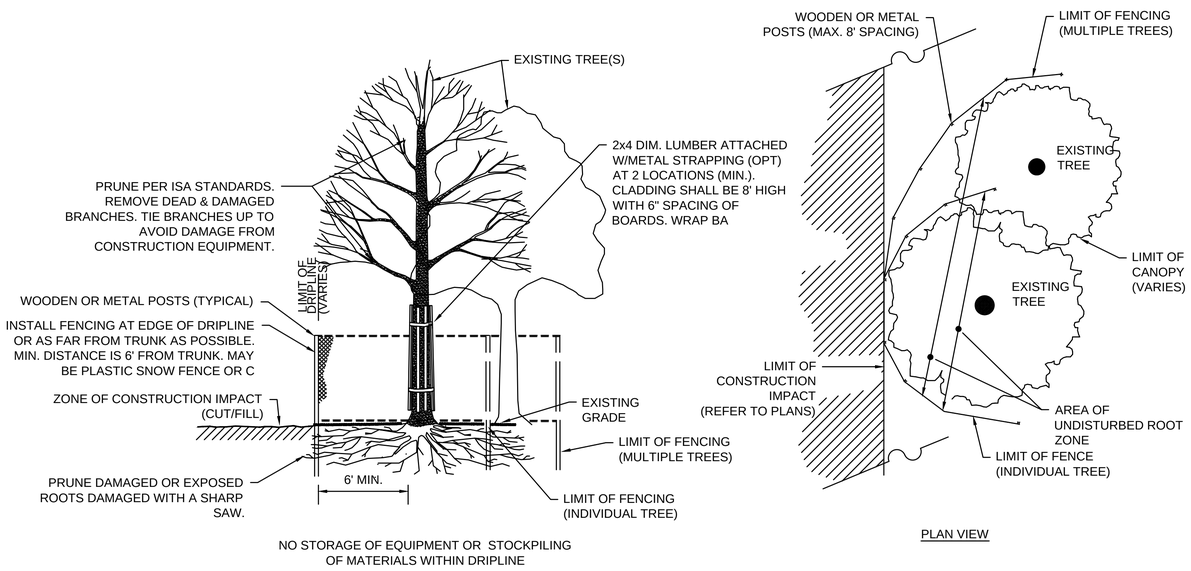

TREE PROTECTION PLAN
N.T.S.

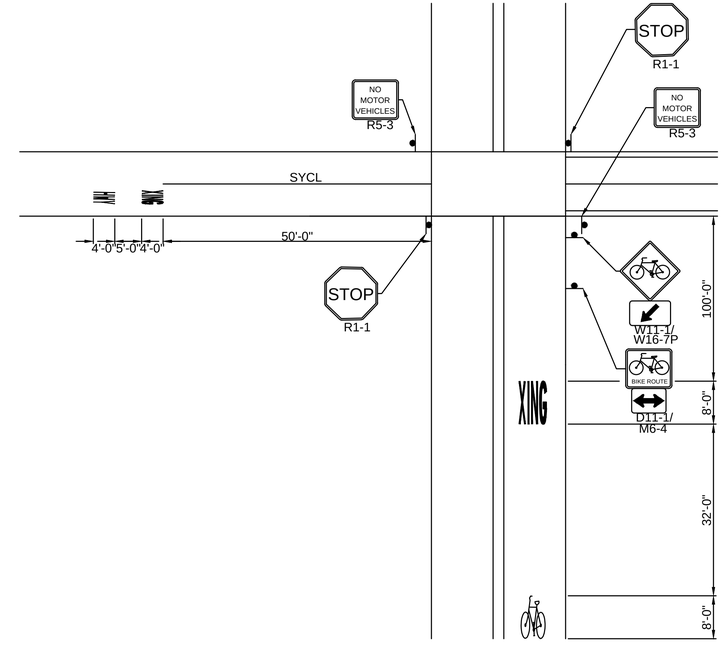

TYPICAL SIGNING AND MARKINGS FOR BIKE PATH CROSSINGS
N.T.S.

604531_HD(CD).DWG Plotted on 3-Apr-2015 10:49 AM

MAYNARD & ACTON
ASSABET RIVER RAIL TRAIL

STATE	FED. AID PROJ. NO.	SHEET NO.	TOTAL SHEETS
MA	-	125	214
PROJECT FILE NO.	604531		

CONSTRUCTION DETAILS

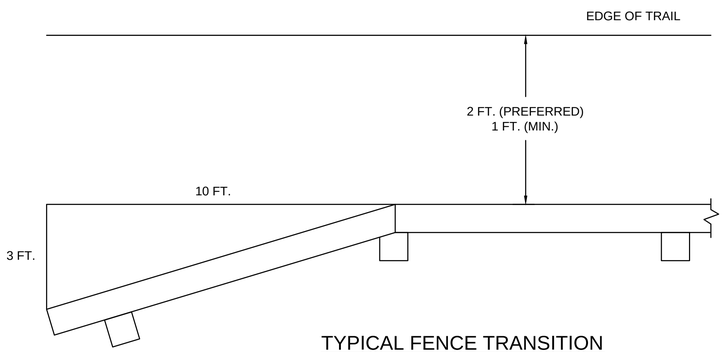

TYPICAL FENCE TRANSITION
AT FENCE APROACHES
N.T.S.

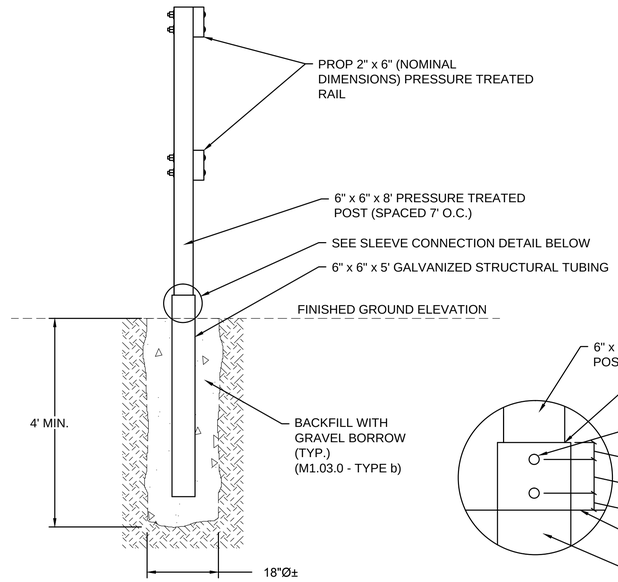

TIMBER RAIL FENCE TUBE STEEL SLEEVE
(FOR USE IN SATURATED LOCATIONS)
N.T.S.

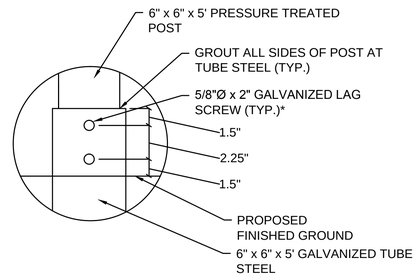

*SAME SCREWS OPPOSITE SIDE.

SLEEVE CONNECTION DETAIL
N.T.S.

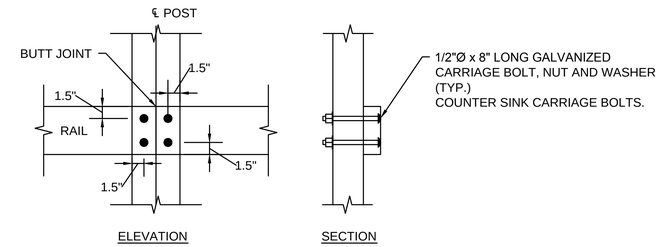

BUTT JOINT CONNECTION
N.T.S.

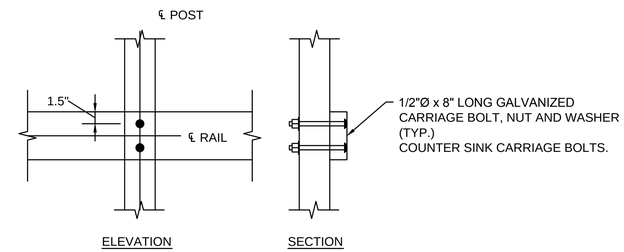

INTERMEDIATE CONNECTION
N.T.S.

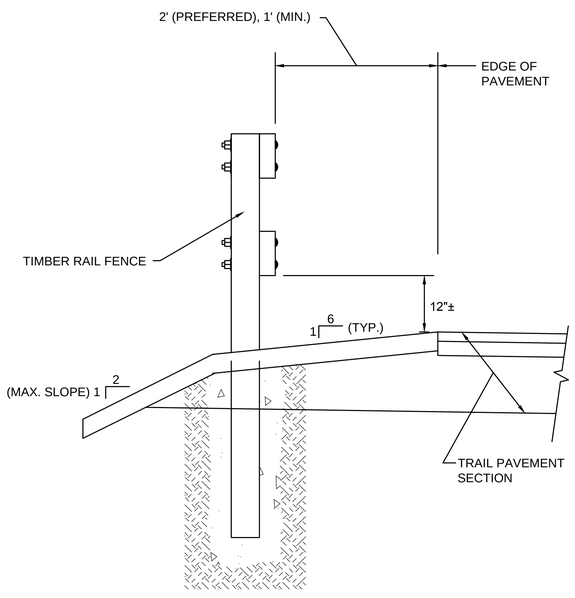

SECTION A-A

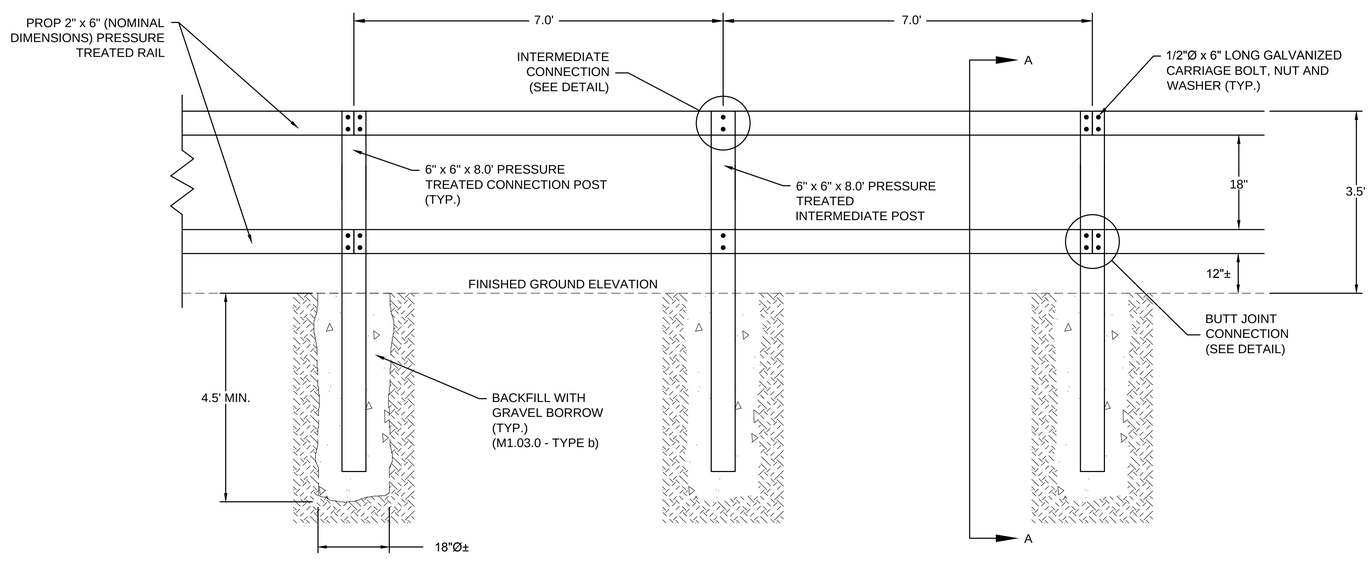

TIMBER RAIL FENCE ELEVATION
N.T.S.
SEE PLANS FOR LOCATIONS

SUGGESTED TIMBER RAIL FENCE CONSTRUCTION SEQUENCE

1. AUGER OR DIG POST HOLE TO REQUIRED DIMENSIONS.
2. IF GROUND IS SATURATED, USE TUBE STEEL SLEEVE. SEE DETAIL ON THIS SHEET.
3. BACKFILL BOTTOM 6"± OF HOLE WITH GRAVEL AND COMPACT THOROUGHLY.
4. SET POST AND HOLD PLUMB DURING BACKFILLING.
5. BACKFILL WITH GRAVEL IN 12" LIFTS. COMPACT EACH LIFT THOROUGHLY.
6. CLAMP RAILS TO POSTS AND FIELD DRILL BOLT HOLES.
7. SET BOLTS, WASHERS AND NUTS.
8. IF CCA PRESSURE TREATED LUMBER IS NOT READILY AVAILABLE AT THE TIME OF CONSTRUCTION OR IT IS DEEMED ENVIRONMENTALLY UNACCEPTABLE FOR COMMERCIAL USES BY THE EPA, USE ACQ PRESSURE TREATED LUMBER.

NOTES:
1. FOR RADII LESS THAN 165', USE CONNECTION POSTS SET AT 7.0' O.C. AND SHORTEN RAILS ACCORDINGLY.

604531_HD(CD).DWG Plotted on 3-Apr-2015 10:49 AM

MAYNARD & ACTON
ASSABET RIVER RAIL TRAIL

STATE	FED. AID PROJ. NO.	SHEET NO.	TOTAL SHEETS
MA	-	126	214
PROJECT FILE NO.	604531		

CONSTRUCTION DETAILS

604531_HD(CD).DWG Plotted on 3-Apr-2015 10:49 AM

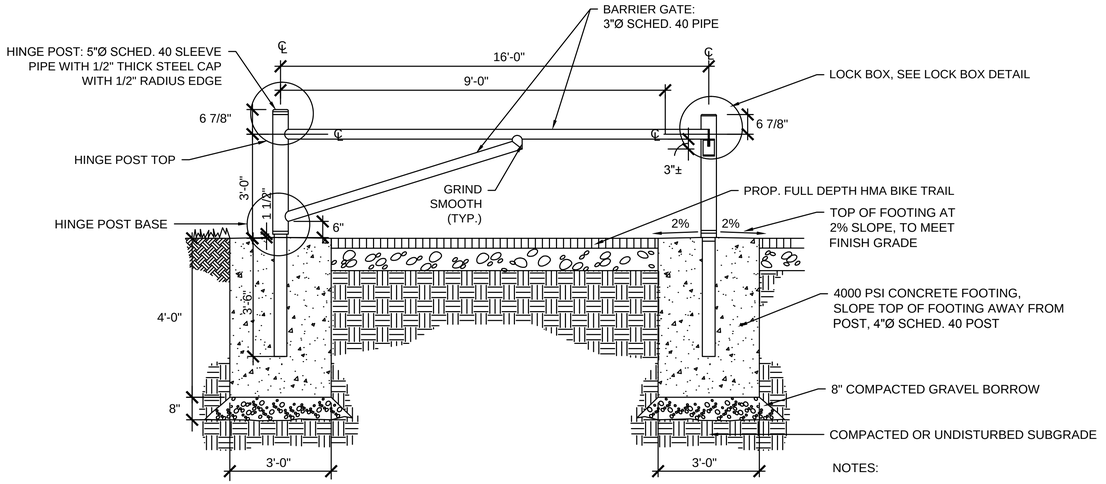

STEEL PIPE ACCESS GATE

N.T.S.

NOTES:

1. ALL STEEL SHALL BE GALVANIZED INSIDE AND OUT.
2. PROVIDE 1/2"Ø WEEP HOLES AT WELDED CONNECTIONS (3 PLACES).
3. INSTALL BRASS BUSHINGS AFTER GALVANIZING.

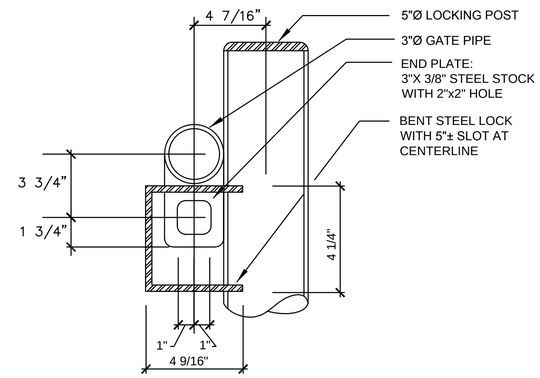

LOCK BOX DETAIL

N.T.S.

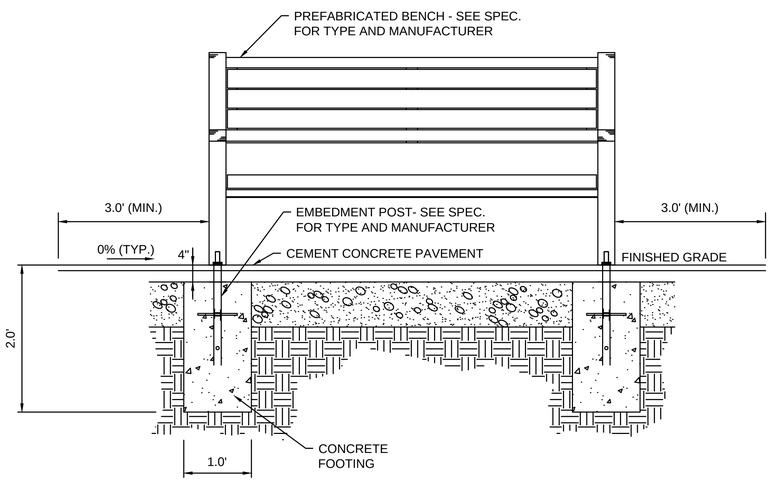

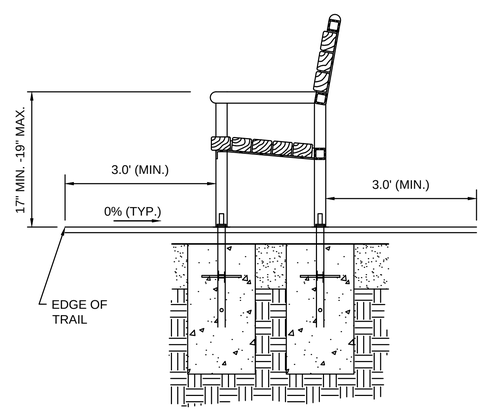

BENCH

N.T.S.

NOTES:

1. MINIMUM SETBACK OF 3' FROM TRAIL SURFACE
2. INSTALLATION OF BENCHES LOCATED ON BOARDWALK SHALL BE COORDINATED WITH BOARDWALK MATERIAL MANUFACTURER

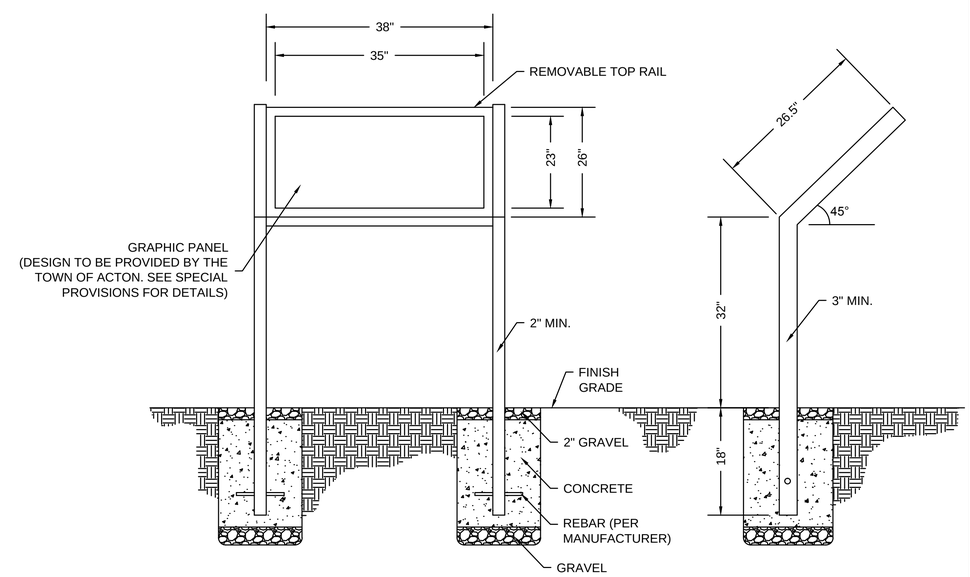

INTERPRETIVE SIGN

N.T.S.

MAYNARD & ACTON
ASSABET RIVER RAIL TRAIL

STATE	FED. AID PROJ. NO.	SHEET NO.	TOTAL SHEETS
MA	-	127	214
PROJECT FILE NO.	604531		

CONSTRUCTION DETAILS

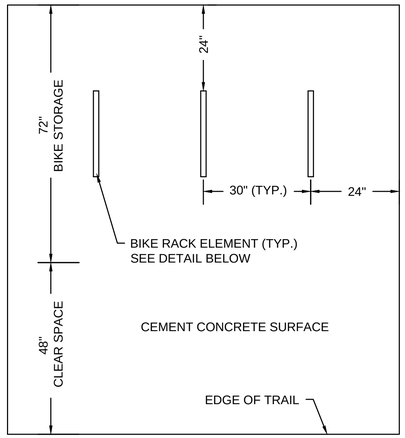

NOTES:
- ALL DIMENSIONS MINIMUM
- SEE PLANS FOR QUANTITY OF BIKE RACK ELEMENTS

BICYCLE RACK PLACEMENT

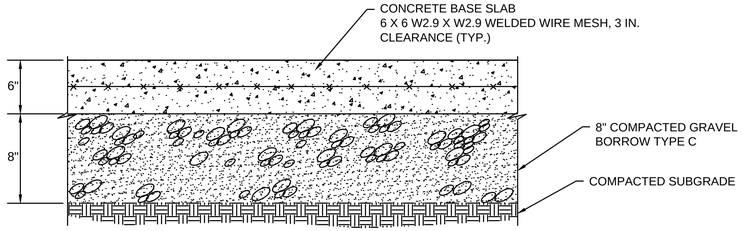

CEMENT CONCRETE FOUNDATION

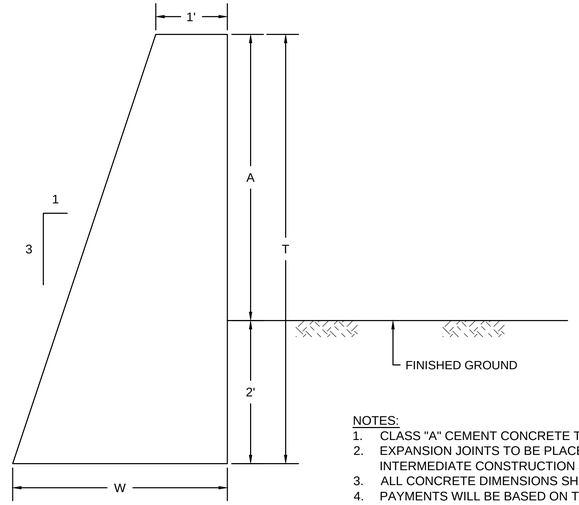

NOTES:
1. CLASS "A" CEMENT CONCRETE TO BE USED.
2. EXPANSION JOINTS TO BE PLACED 90' O.C. MAXIMUM WITH INTERMEDIATE CONSTRUCTION JOINTS PLACED AT 30' O.C. MAXIMUM.
3. ALL CONCRETE DIMENSIONS SHOWN ARE MINIMUM.
4. PAYMENTS WILL BE BASED ON TABLE BELOW.

HEIGHTS		WIDTH	AREA SQ. FT.	CU. YDS. PER LIN. FT.
A	T	W		
2'-0"	4'-0"	2'-4"	6.667	0.247
2'-6"	4'-6"	2'-6"	7.875	0.292
3'-0"	5'-0"	2'-8"	9.165	0.339
3'-6"	5'-6"	2'-10"	10.541	0.390
4'-0"	6'-0"	3'-0"	12.000	0.444
4'-6"	6'-6"	3'-2"	13.541	0.502
5'-0"	7'-0"	3'-4"	15.162	0.562

LOW RETAINING WALL

N.T.S.

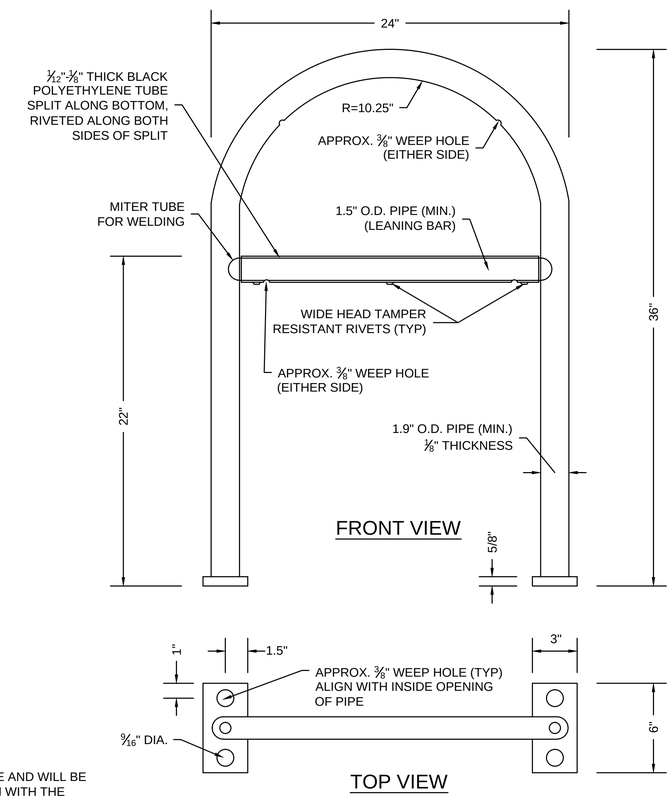

NOTE:
DIMENSIONS ARE APPROXIMATE AND WILL BE DETERMINED IN COORDINATION WITH THE MANUFACTURER. BIKE RACK ELEMENTS TO BE OF THE INVERTED "U" OR "A" TYPE AS DEFINED IN "BICYCLE PARKING GUIDELINES" BY ASSOCIATION OF PEDESTRIAN AND BICYCLE PROFESSIONALS. EACH BIKE RACK ELEMENT SHALL ACCOMMODATE TWO BICYCLES.

BICYCLE RACK ELEMENT DETAIL

N.T.S.

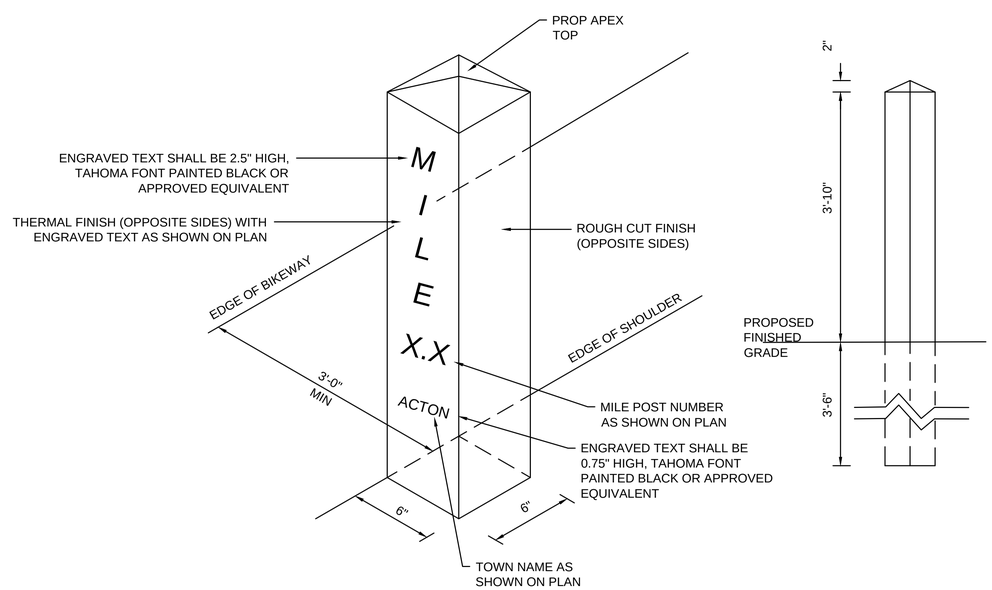

GRANITE MARKER

N.T.S.

604531_HD(CD).DWG Plotted on 3-Apr-2015 10:49 AM

MAYNARD & ACTON
ASSABET RIVER RAIL TRAIL

STATE	FED. AID PROJ. NO.	SHEET NO.	TOTAL SHEETS
MA	-	128	214
PROJECT FILE NO.	604531		

CONSTRUCTION DETAILS

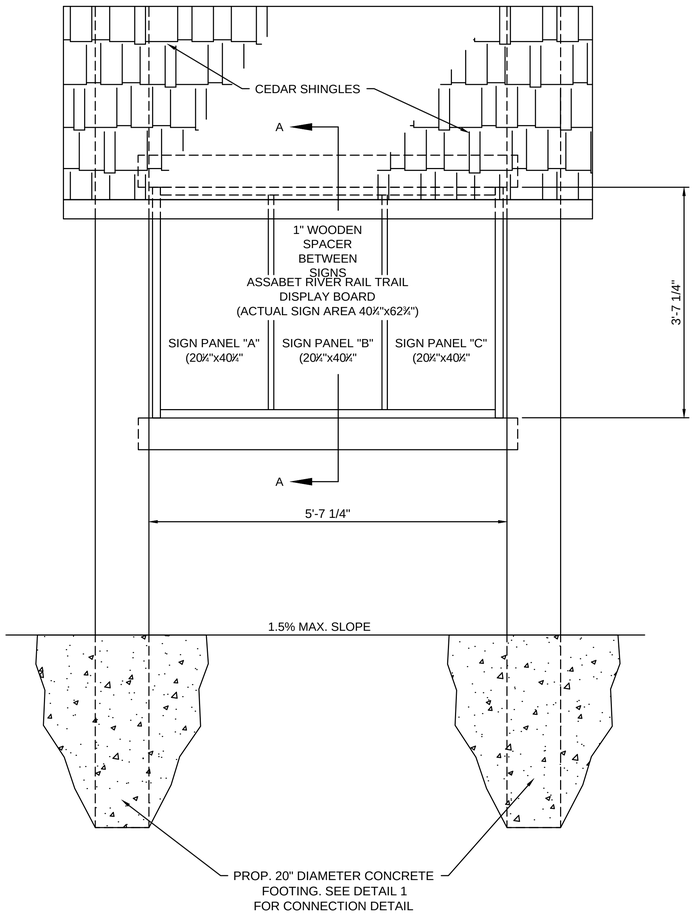

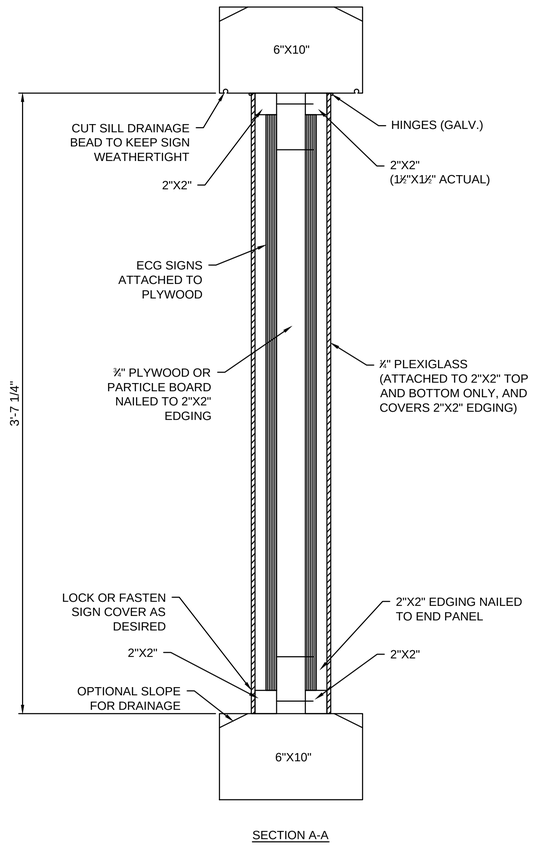

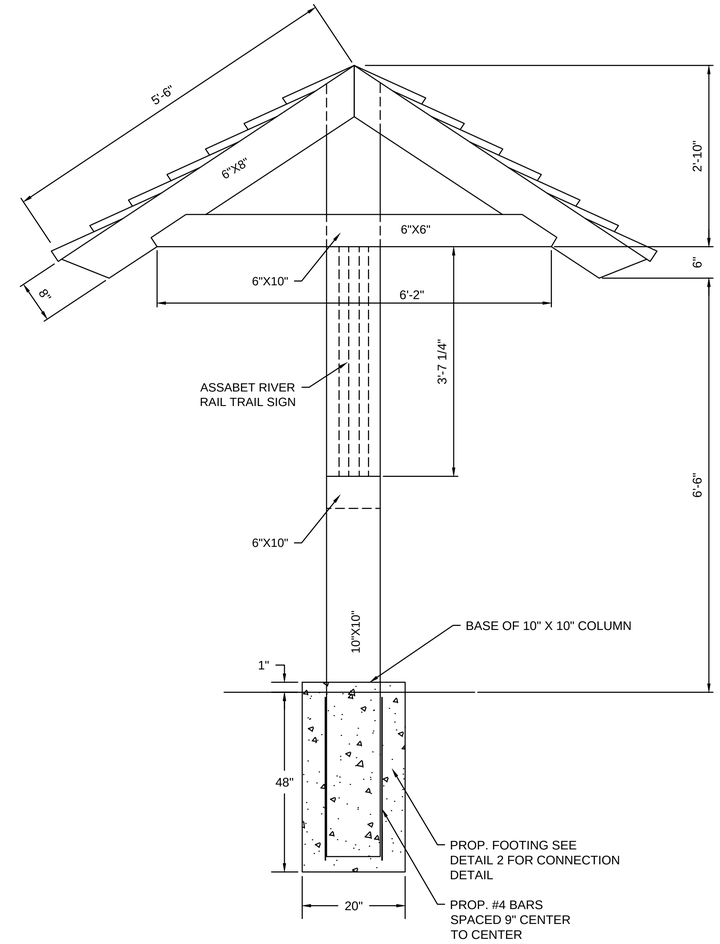

DISPLAY BOARD DETAILS
N.T.S.

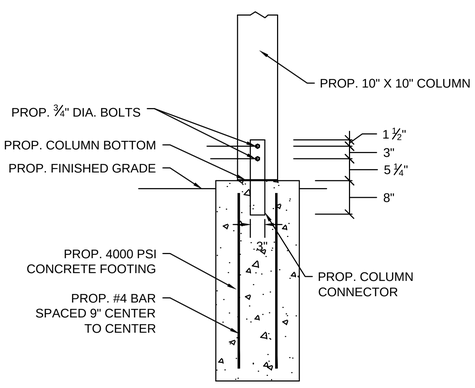

COLUMN BASE - DETAIL 1
N.T.S.

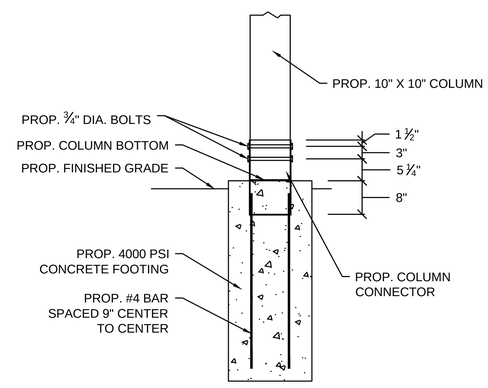

COLUMN BASE - DETAIL 2
N.T.S.

604531_HD(CD).DWG Plotted on 3-Apr-2015 10:49 AM

604531_HD(CD).DWG Plotted on 3-Apr-2015 10:49 AM

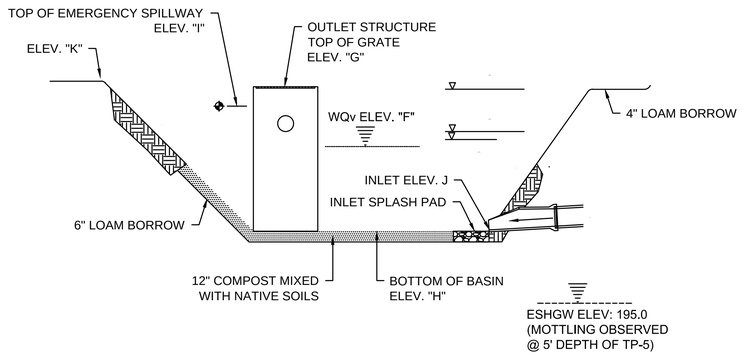

BASIN DESIGN TABLE											
	A	B	C	D	E	F	G	H	I	J	K
INFILTRATION BASIN	320.00	321.00	321.98	322.93	323.73	321.52	324.60	320.00	324.60	320.16	325.00

TYPICAL INFILTRATION/ EXTENDED DETENTION BASIN CROSS-SECTION

NTS

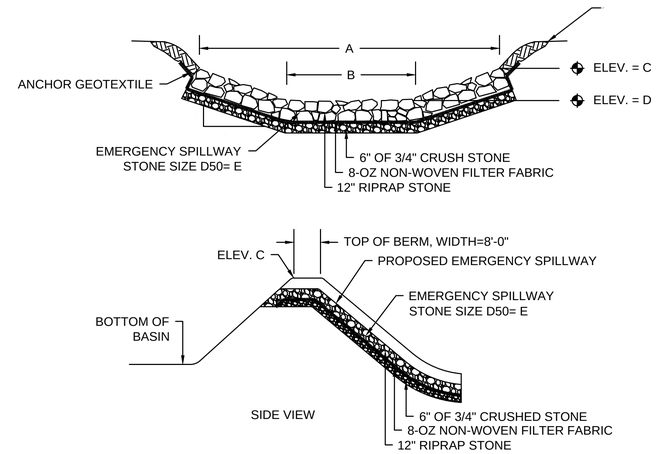

SPILLWAY DESIGN TABLE					
	A	B	C	D	E
IB-1	11'	5'	325.00	324.60	4"

SPILLWAY CROSS-SECTION

NTS

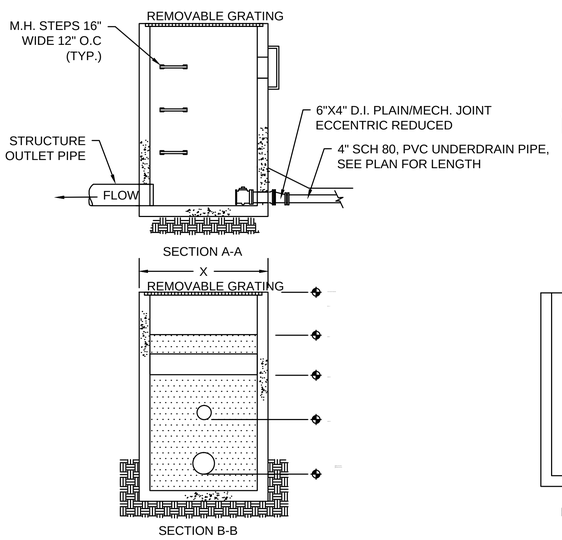

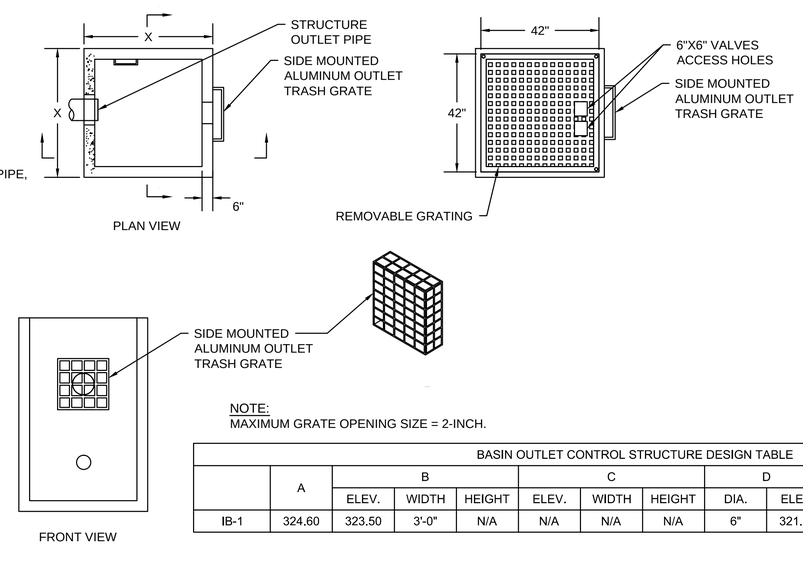

NOTE:
MAXIMUM GRATE OPENING SIZE = 2-INCH.

BASIN OUTLET CONTROL STRUCTURE DESIGN TABLE													
	A	B			C			D		E		F	X
		ELEV.	WIDTH	HEIGHT	ELEV.	WIDTH	HEIGHT	DIA.	ELEV.	DIA.	ELEV.		
IB-1	324.60	323.50	3'-0"	N/A	N/A	N/A	N/A	6"	321.55	12"	320.00	319.00	4'-0"

INFILTRATION/ EXTENDED DETENTION BASIN CONCRETE OUTLET STRUCTURE DETAIL

NTS

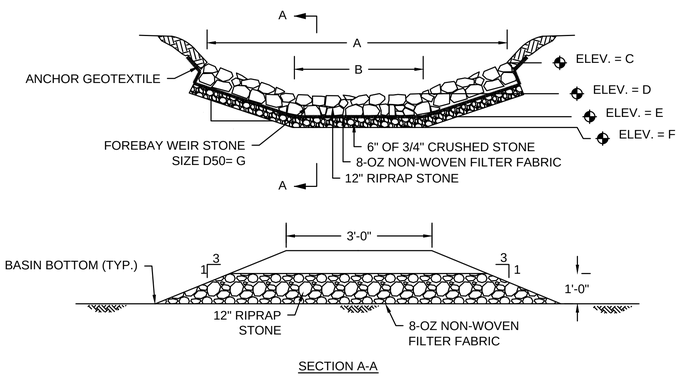

FOREBAY WEIR DESIGN TABLE							
	A	B	C	D	E	F	G
IB-1	11'	5'	321.50	321.00	320.00	319.50	4"
IB-2	40'	32'	317.50	317.00	316.00	315.50	4"

FOREBAY RIPRAP WEIR (TYP.)

NTS

MAYNARD & ACTON
ASSABET RIVER RAIL TRAIL

HOR. SCALE IN FEET
4 0 4 8
4 0 4 8
VER. SCALE IN FEET

STATE	FED. AID PROJ. NO.	SHEET NO.	TOTAL SHEETS
MA	-	185	214
PROJECT FILE NO.	604531		

CROSS SECTIONS

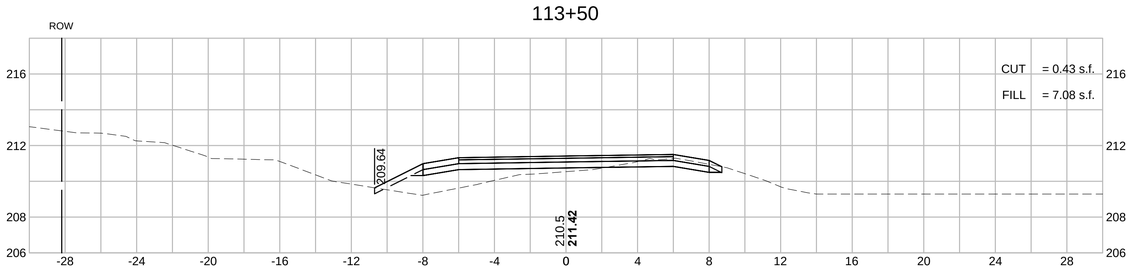

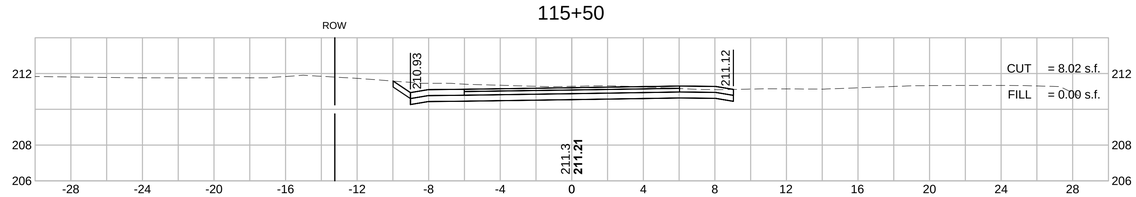

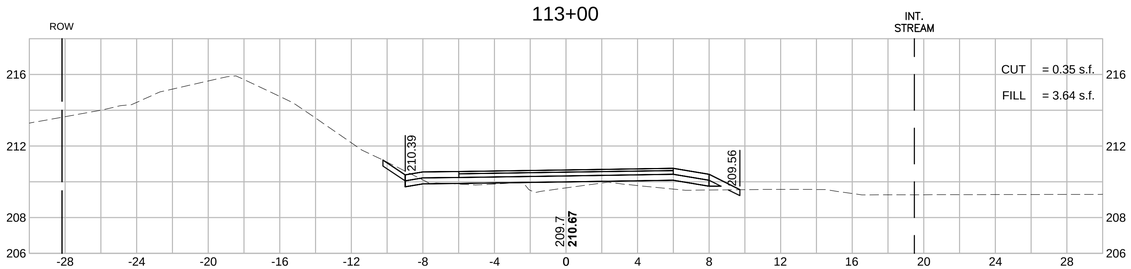

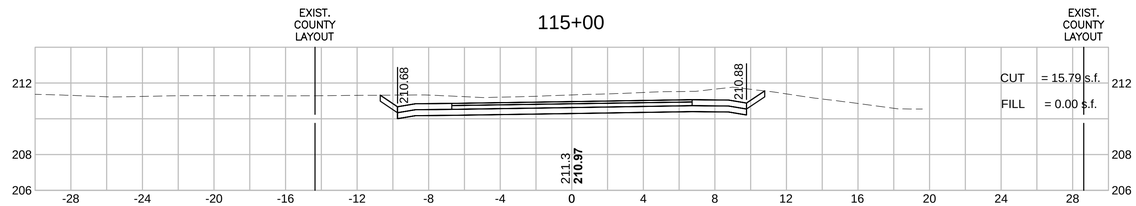

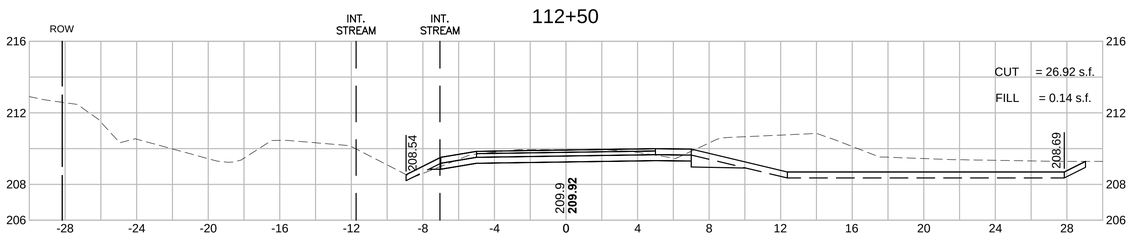

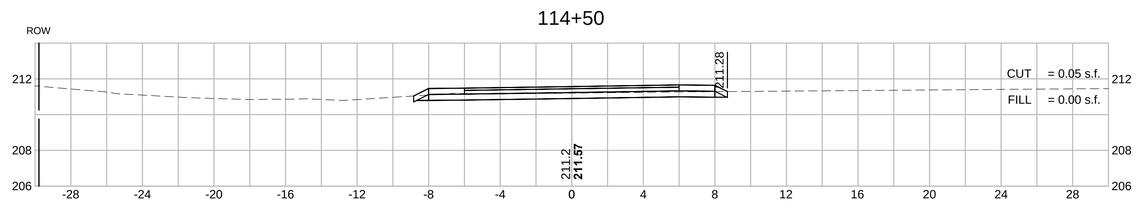

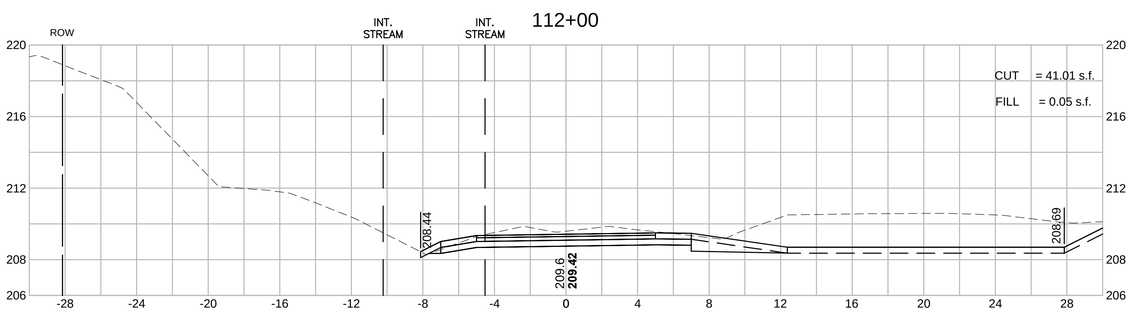

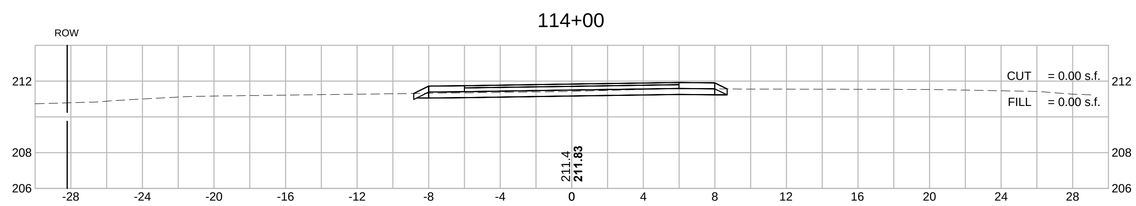

604531_HD(XS).DWG Plotted on 3-Apr-2015 10:51 AM

MAYNARD & ACTON
ASSABET RIVER RAIL TRAIL

STATE	FED. AID PROJ. NO.	SHEET NO.	TOTAL SHEETS
MA	-	186	214
PROJECT FILE NO.	604531		

HOR. SCALE IN FEET
4 0 4 8
4 0 4 8
VER. SCALE IN FEET

CROSS SECTIONS

118+00

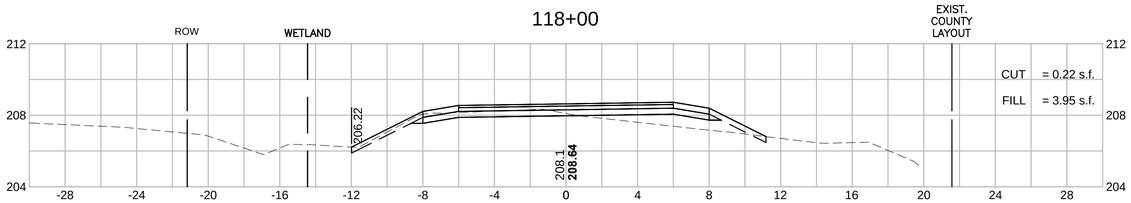

117+50

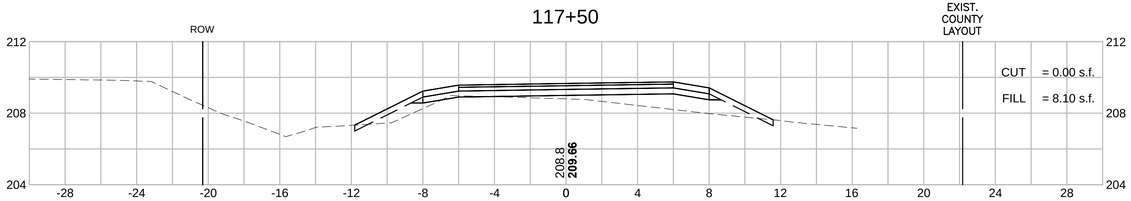

117+00

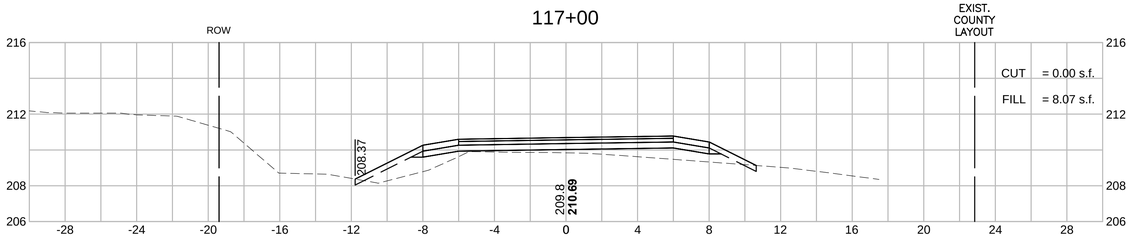

116+50

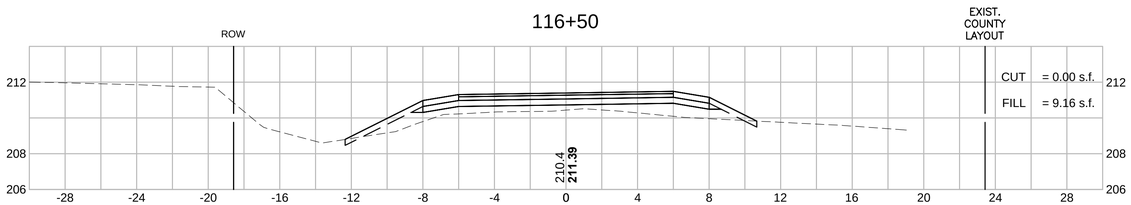

116+00

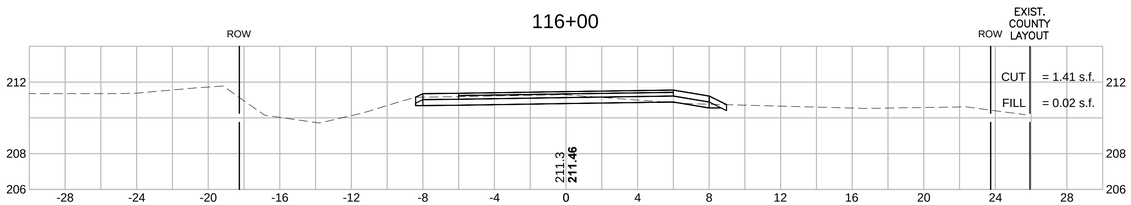

120+00

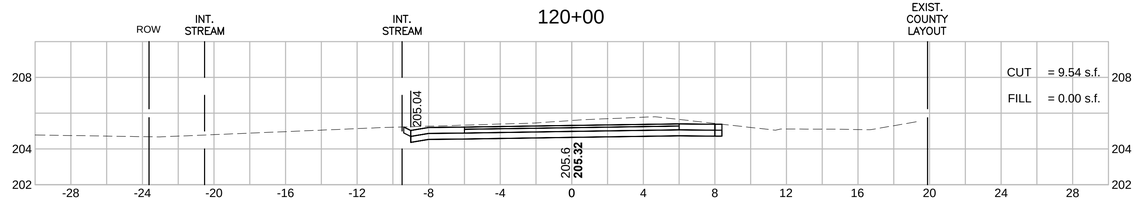

119+50

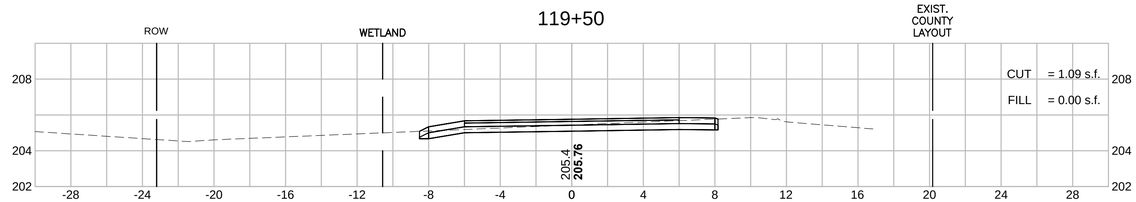

119+00

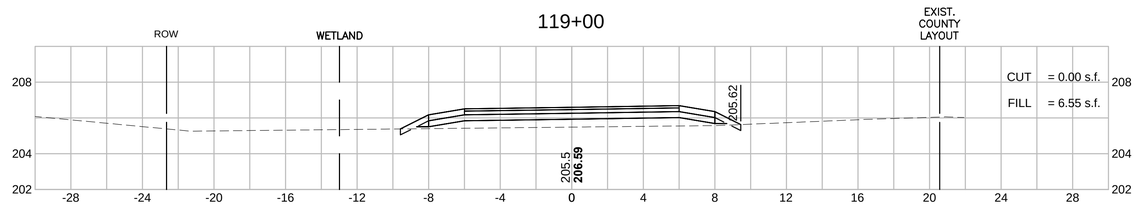

118+50

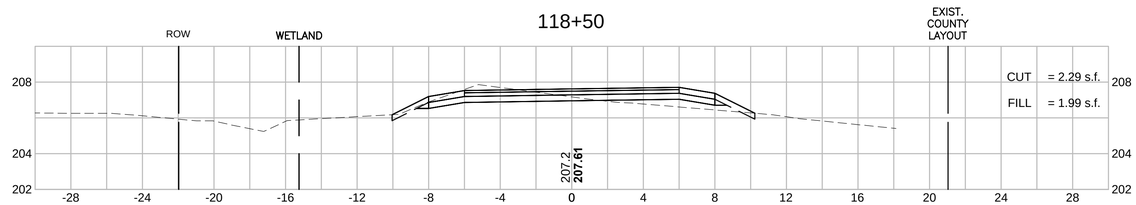

604531_HD(XS).DWG Plotted on 3-Apr-2015 10:51 AM

MAYNARD & ACTON
ASSABET RIVER RAIL TRAIL

STATE	FED. AID PROJ. NO.	SHEET NO.	TOTAL SHEETS
MA	-	187	214
PROJECT FILE NO.	604531		

CROSS SECTIONS

HOR. SCALE IN FEET
4 0 4 8
4 0 4 8
VER. SCALE IN FEET

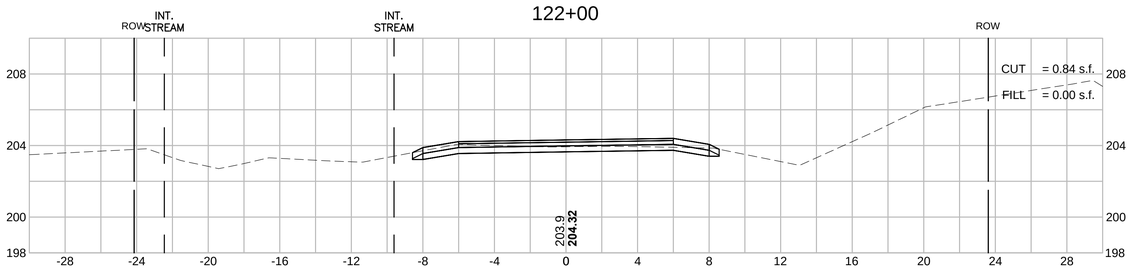

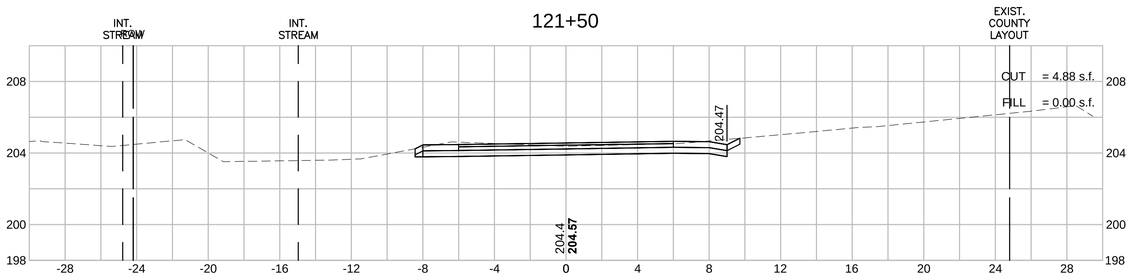

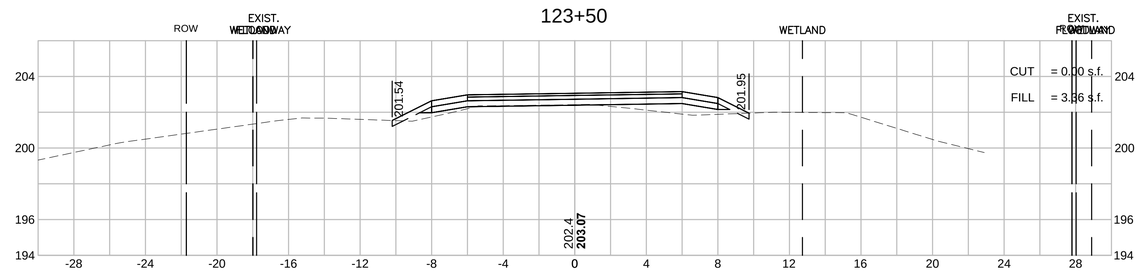

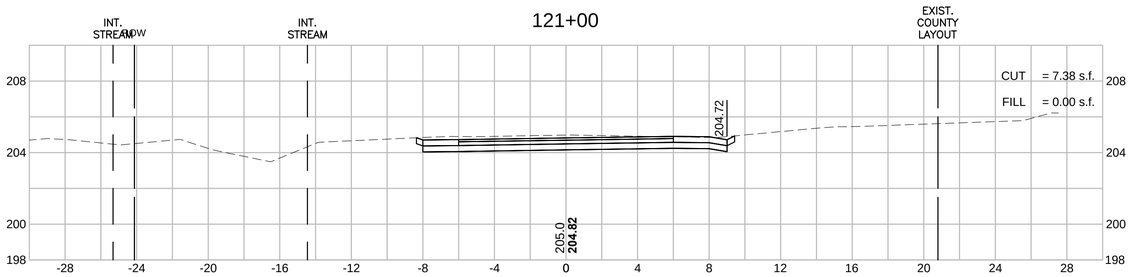

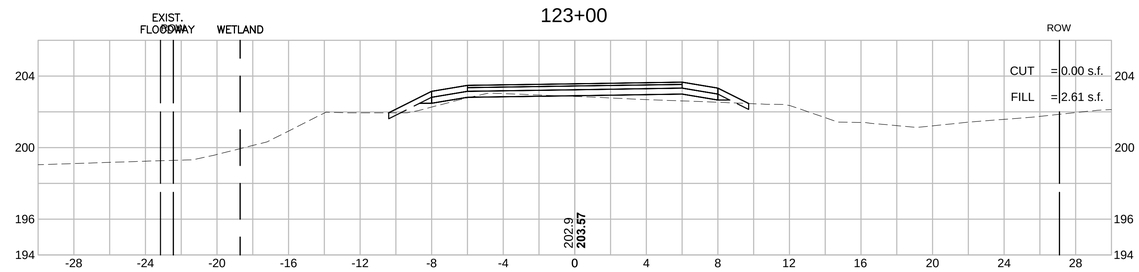

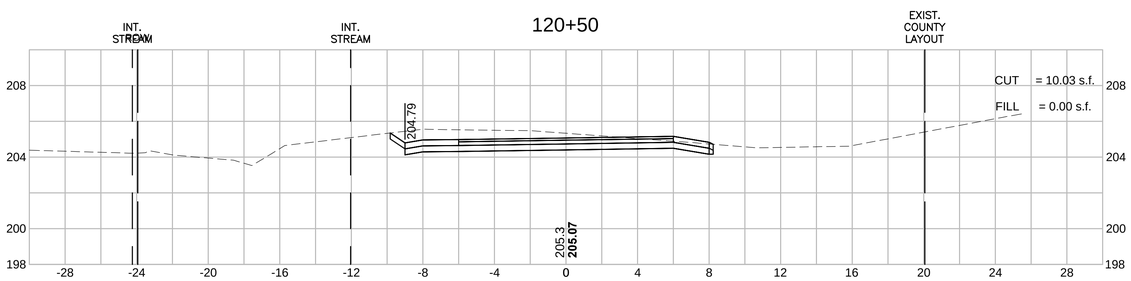

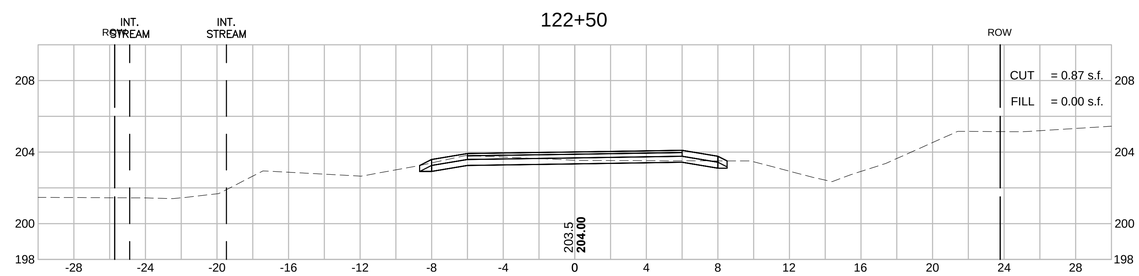

604531_HD(XS).DWG Plotted on 3-Apr-2015 10:52 AM

HOR. SCALE IN FEET
4 0 4 8
4 0 4 8
VER. SCALE IN FEET

MAYNARD & ACTON
ASSABET RIVER RAIL TRAIL

STATE	FED. AID PROJ. NO.	SHEET NO.	TOTAL SHEETS
MA	-	188	214
PROJECT FILE NO.	604531		

CROSS SECTIONS

125+00

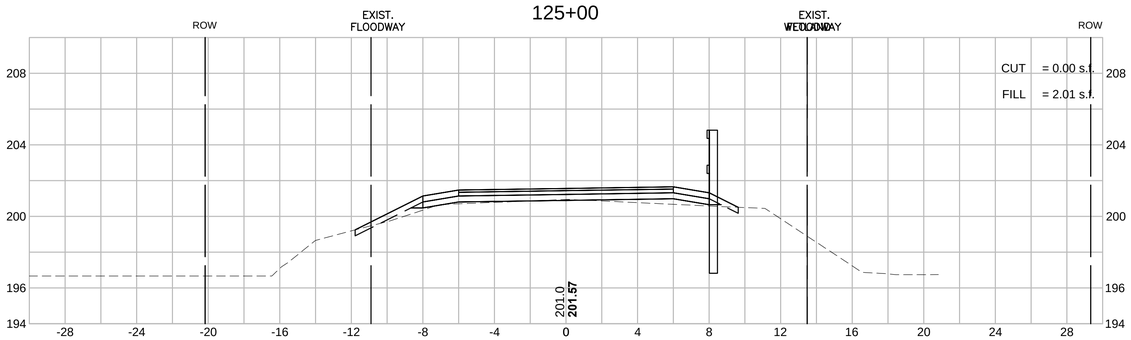

126+33

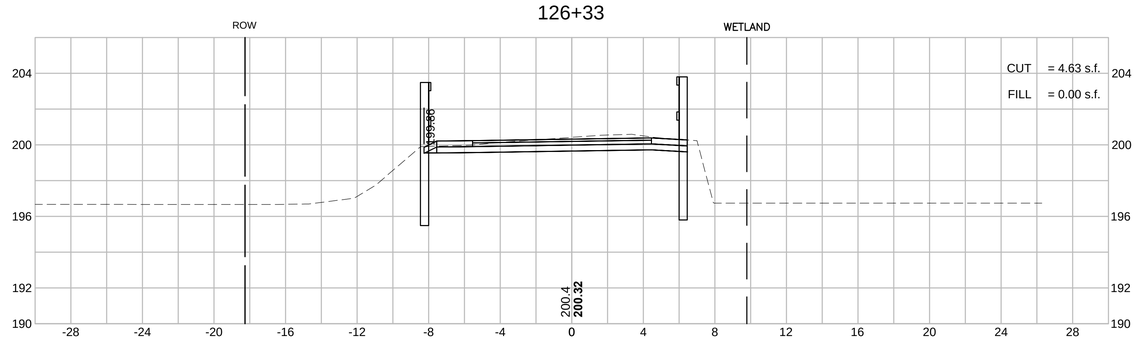

124+50

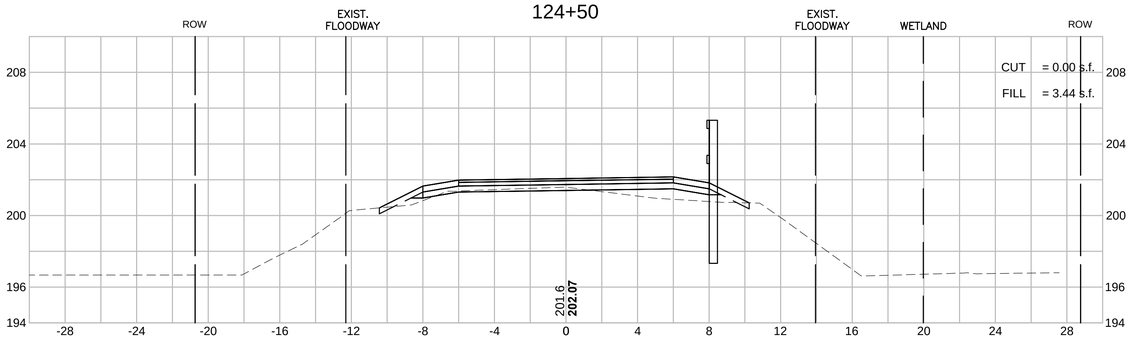

126+00

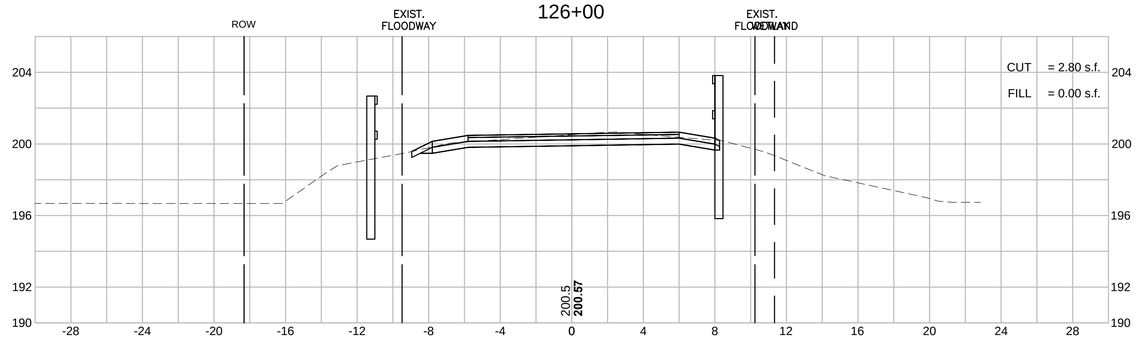

124+00

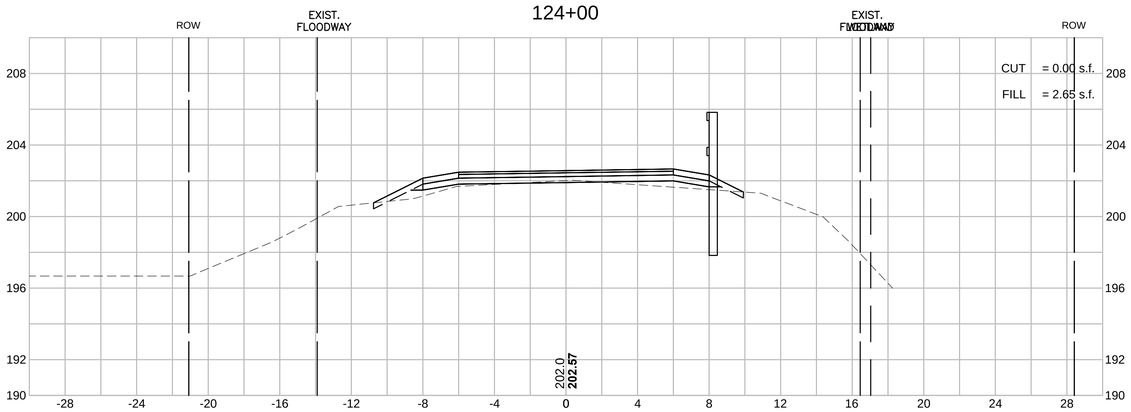

125+50

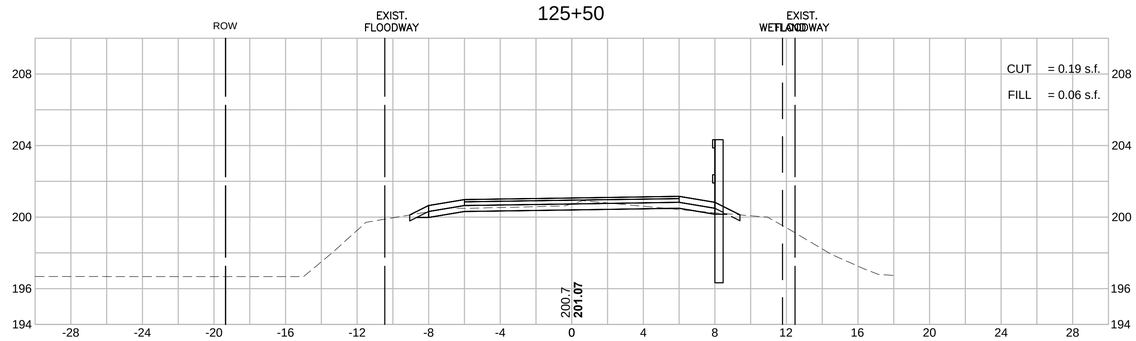

604531_HD(XS).DWG Plotted on 3-Apr-2015 10:52 AM

MAYNARD & ACTON
ASSABET RIVER RAIL TRAIL

STATE	FED. AID PROJ. NO.	SHEET NO.	TOTAL SHEETS
MA	-	189	214
PROJECT FILE NO.	604531		

CROSS SECTIONS

HOR. SCALE IN FEET
4 0 4 8
4 0 4 8
VER. SCALE IN FEET

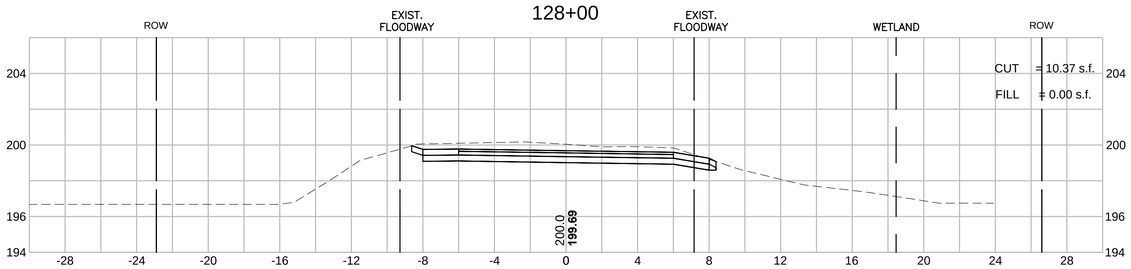

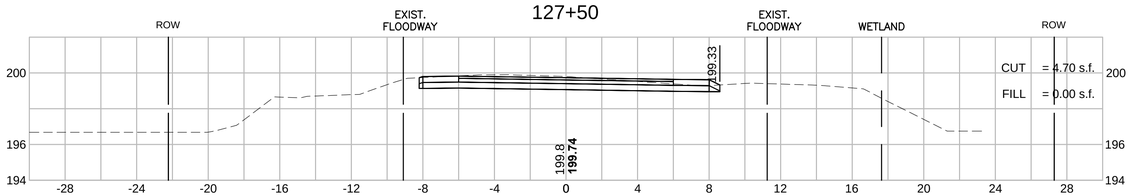

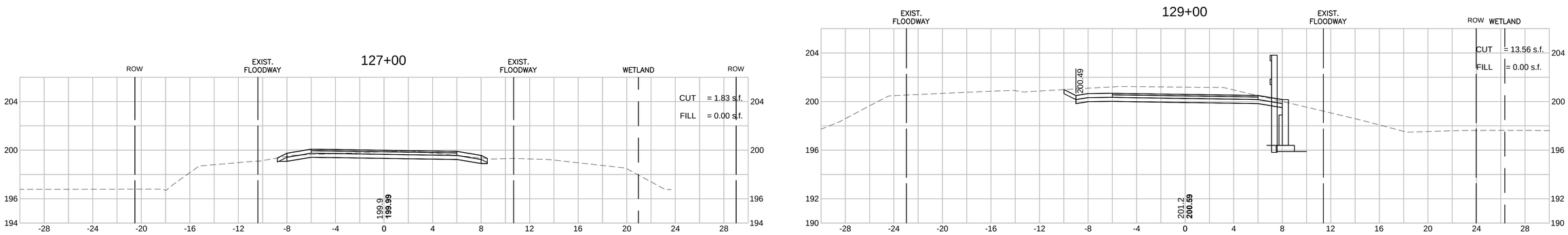

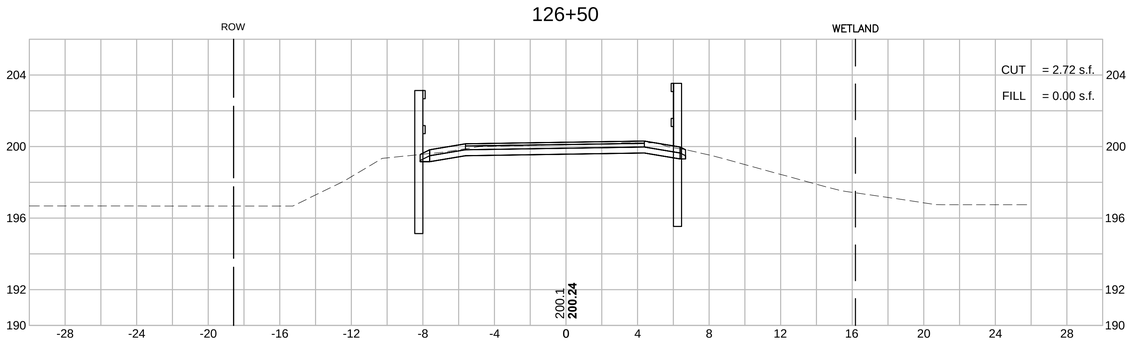

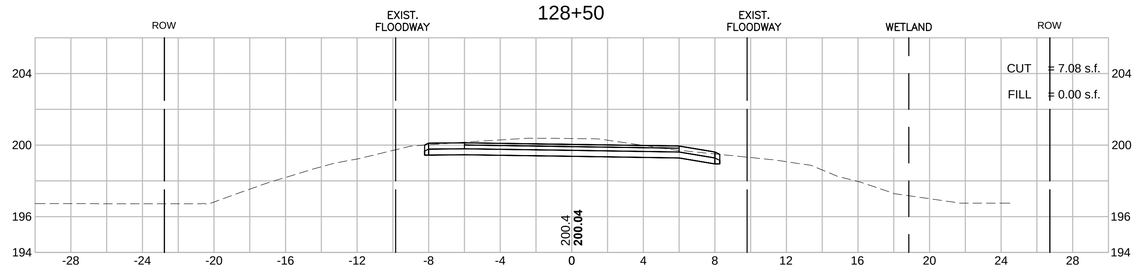

604531_HD(XS).DWG Plotted on 3-Apr-2015 10:53 AM

MAYNARD & ACTON
ASSABET RIVER RAIL TRAIL

STATE	FED. AID PROJ. NO.	SHEET NO.	TOTAL SHEETS
MA	-	190	214
PROJECT FILE NO.	604531		

CROSS SECTIONS

HOR. SCALE IN FEET
4 0 4 8
4 0 4 8
VER. SCALE IN FEET

131+00

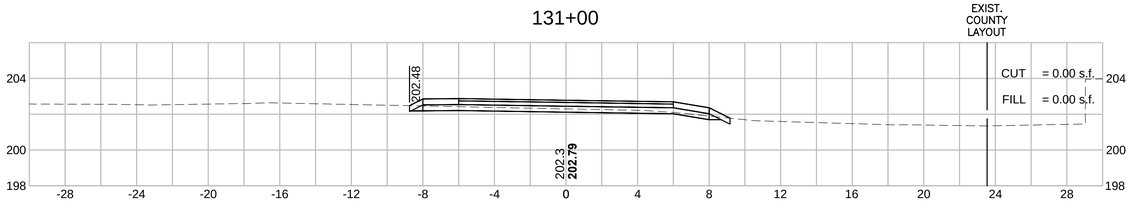

130+50

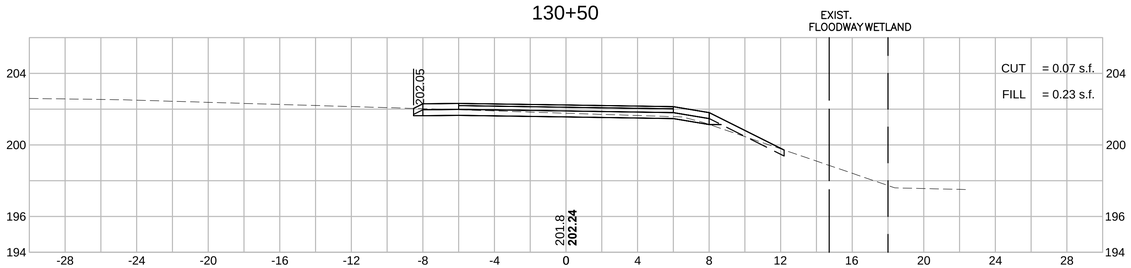

132+50

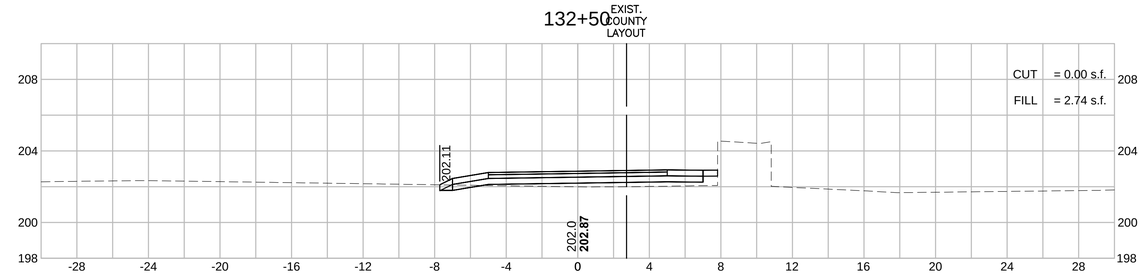

130+00

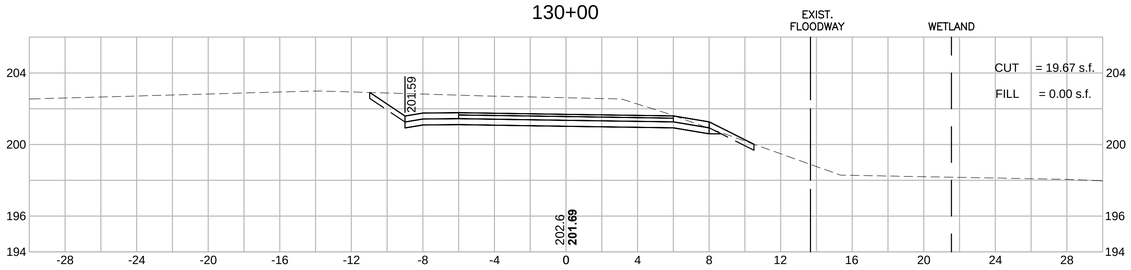

132+00

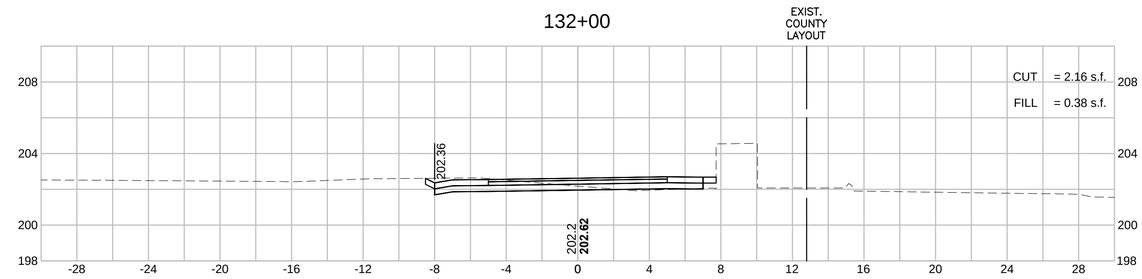

129+50

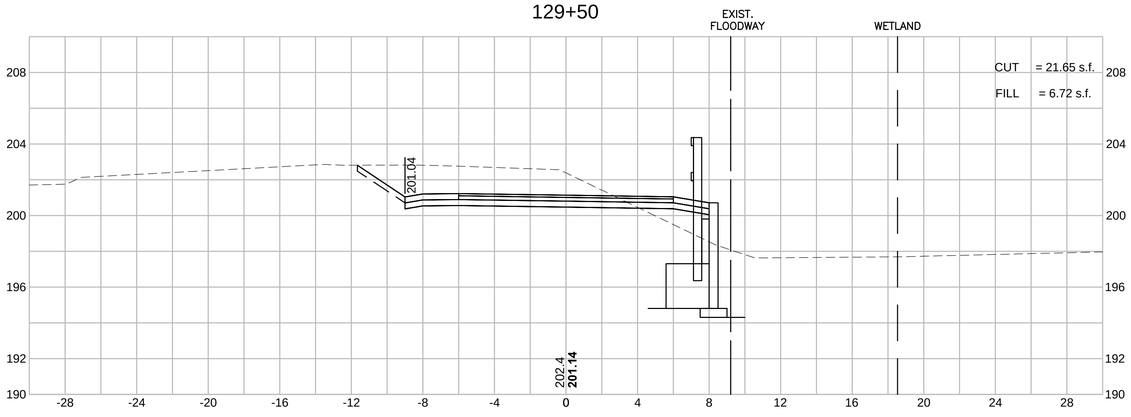

131+50

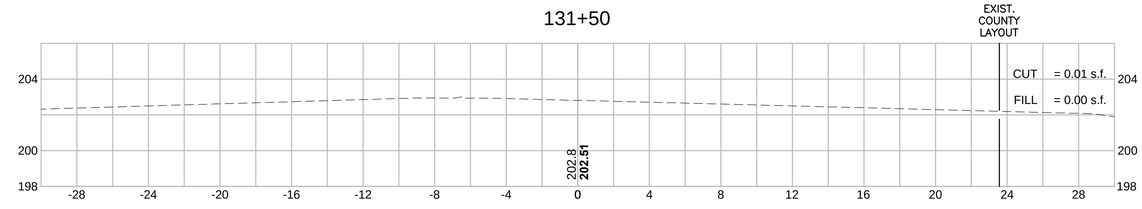

604531_HD(XS).DWG Plotted on 3-Apr-2015 10:54 AM

MAYNARD & ACTON
ASSABET RIVER RAIL TRAIL

HOR. SCALE IN FEET
4 0 4 8
4 0 4 8
VER. SCALE IN FEET

STATE	FED. AID PROJ. NO.	SHEET NO.	TOTAL SHEETS
MA	-	191	214
PROJECT FILE NO.	604531		

CROSS SECTIONS

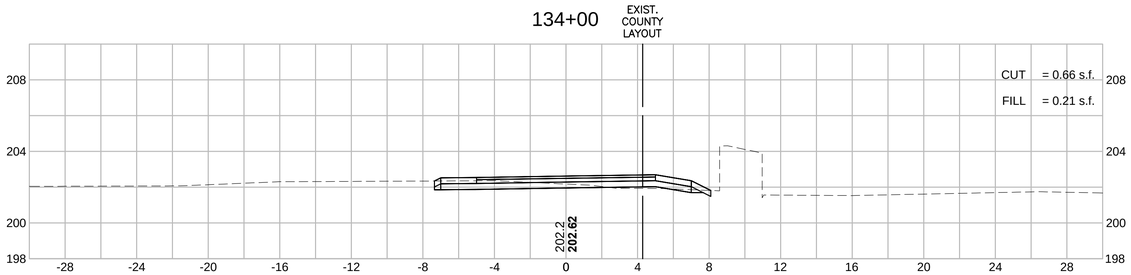

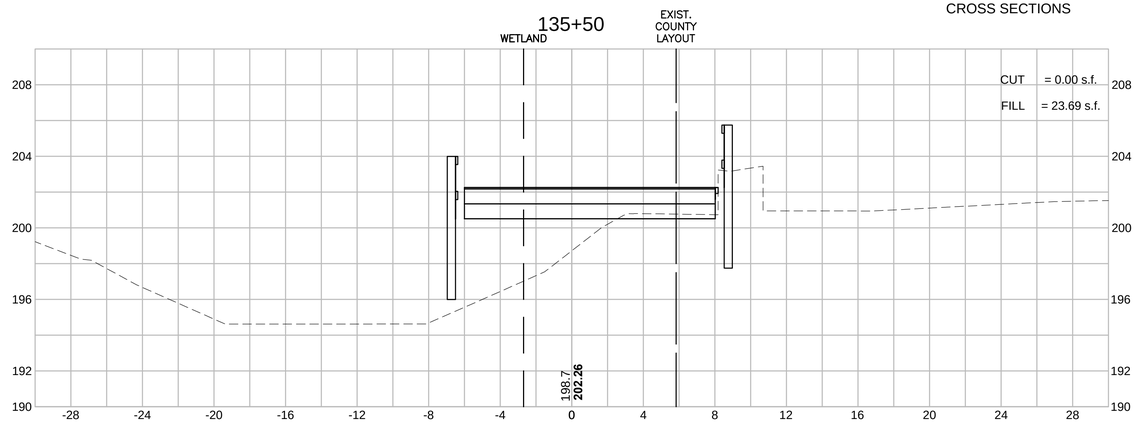

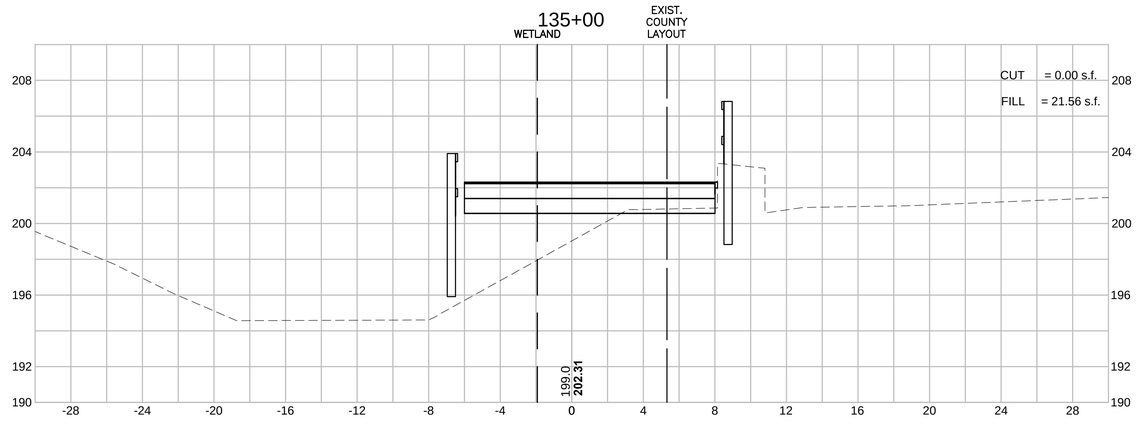

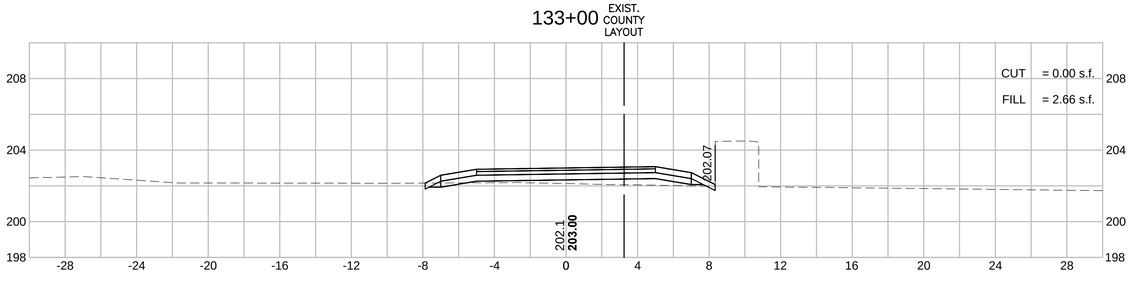

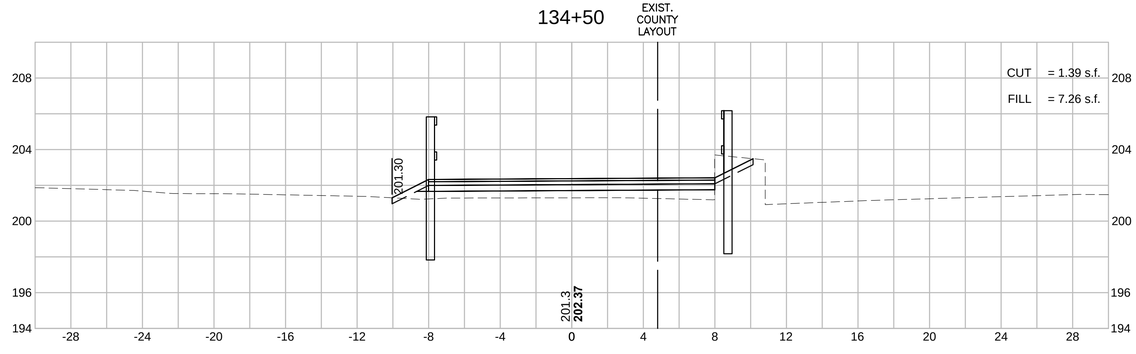

Plotted on 3-Apr-2015 10:54 AM
604531_HD(XS).DWG

HOR. SCALE IN FEET
4 0 4 8
4 0 4 8
VER. SCALE IN FEET

MAYNARD & ACTON
ASSABET RIVER RAIL TRAIL

STATE	FED. AID PROJ. NO.	SHEET NO.	TOTAL SHEETS
MA	-	195	214
PROJECT FILE NO.	604531		

CROSS SECTIONS

604531_HD(XS).DWG Plotted on 3-Apr-2015 10:55 AM

145+00

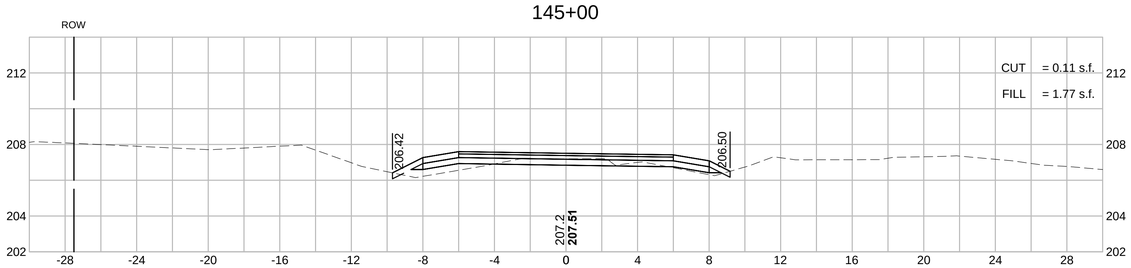

146+50

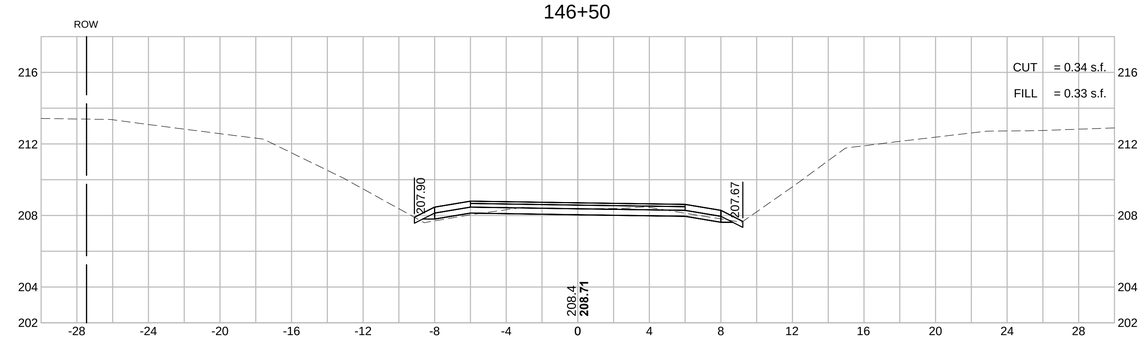

144+50

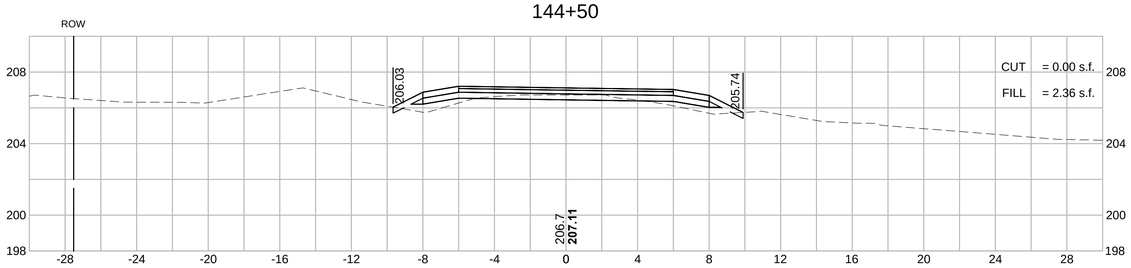

146+00

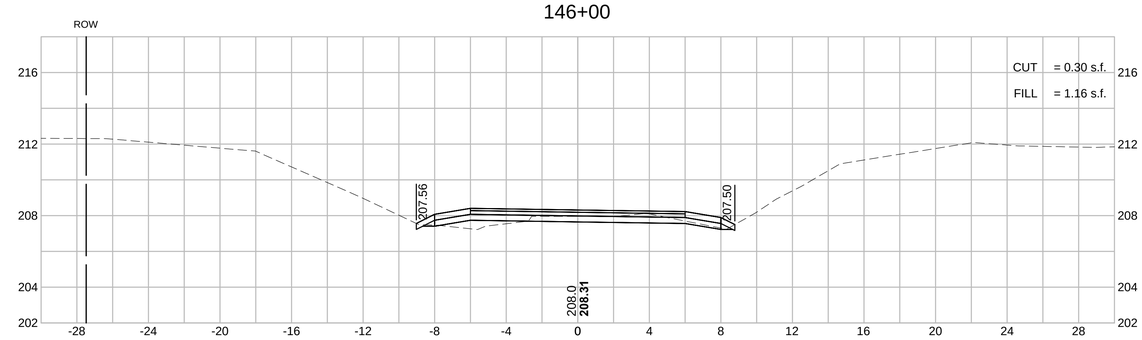

144+00

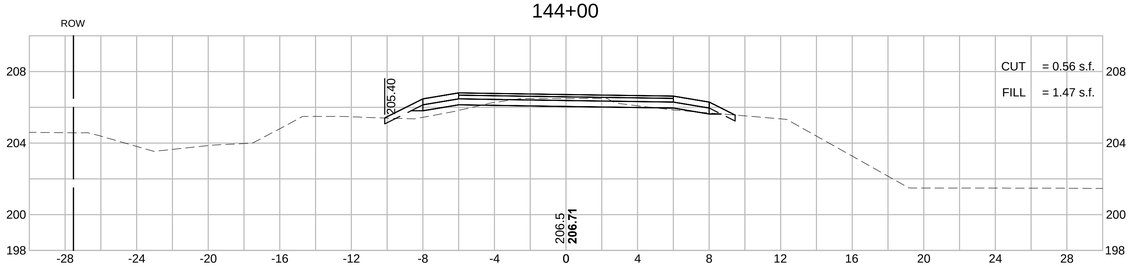

145+50

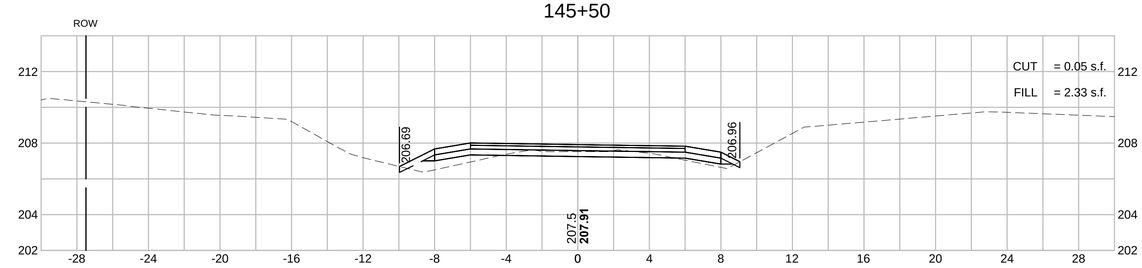

MAYNARD & ACTON
ASSABET RIVER RAIL TRAIL

STATE	FED. AID PROJ. NO.	SHEET NO.	TOTAL SHEETS
MA	-	196	214
PROJECT FILE NO.	604531		

CROSS SECTIONS

HOR. SCALE IN FEET
4 0 4 8
4 0 4 8
VER. SCALE IN FEET

148+00

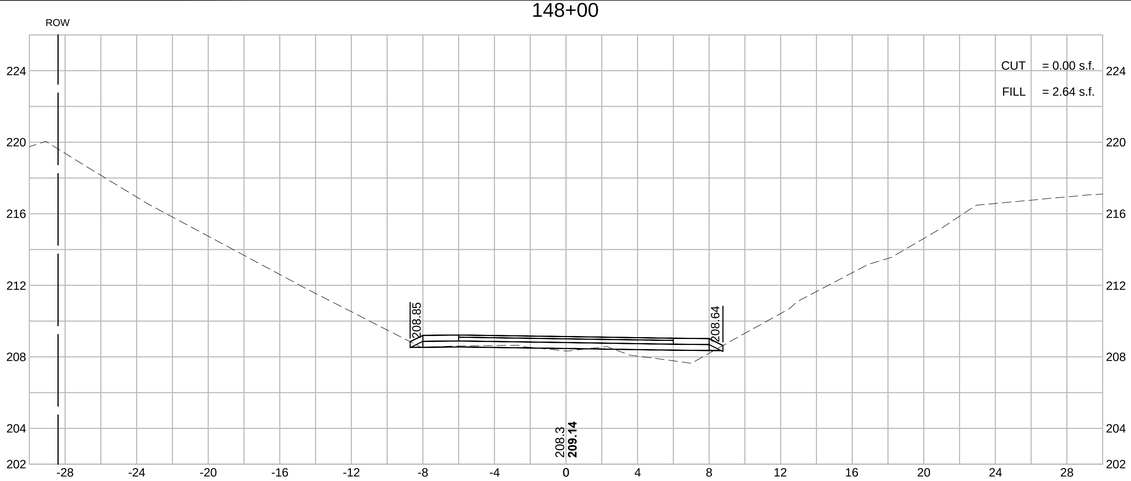

149+50

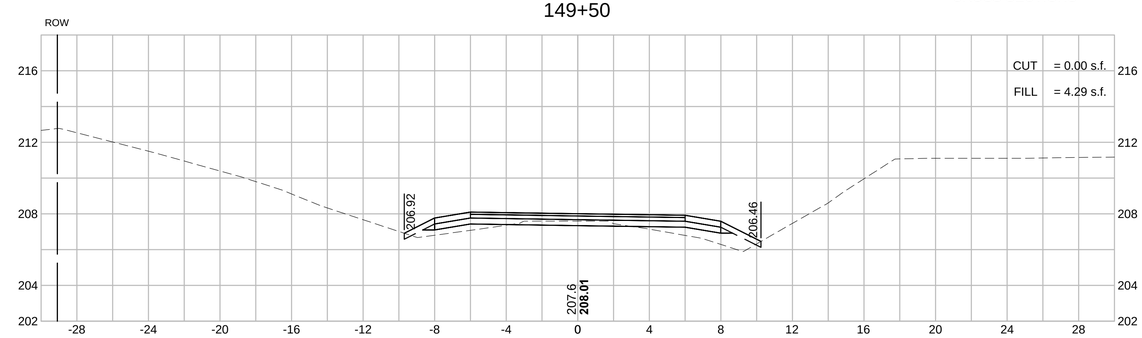

147+50

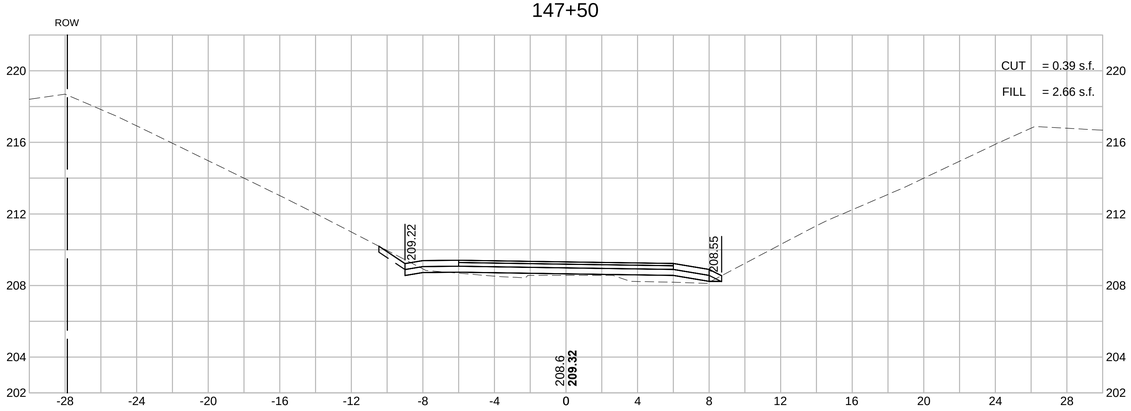

149+00

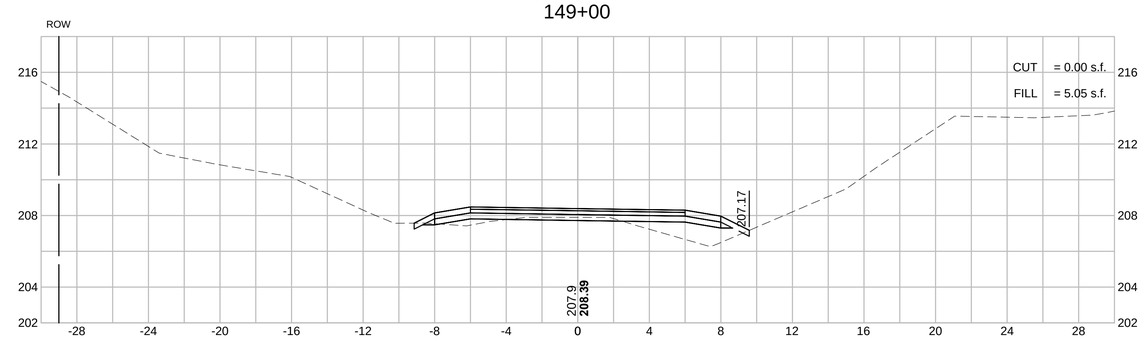

147+00

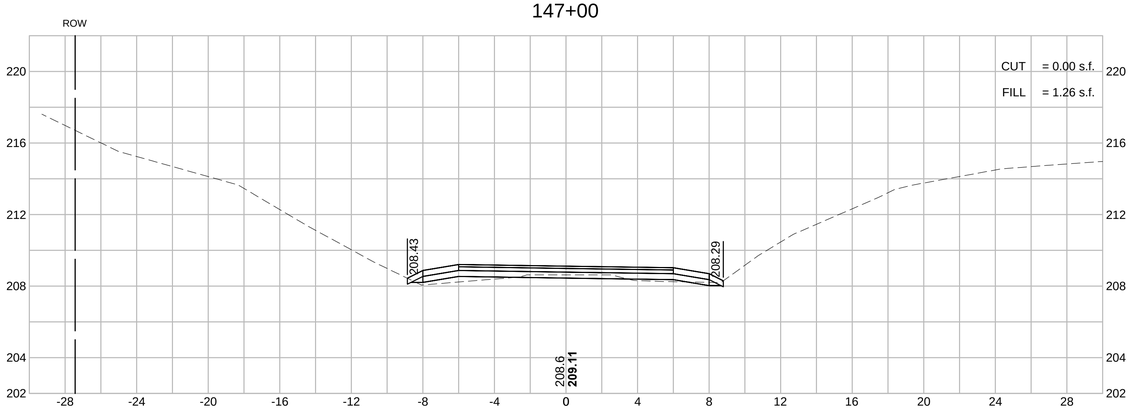

148+50

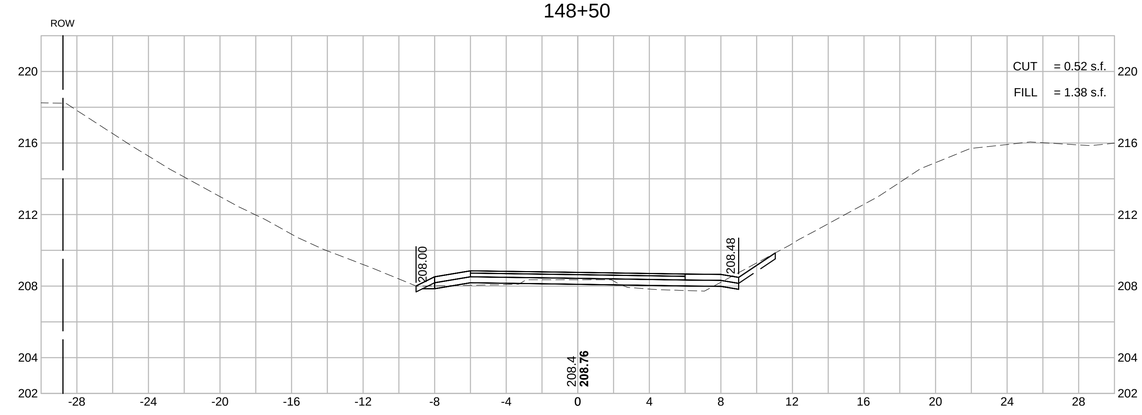

604531_HD(XS).DWG Plotted on 3-Apr-2015 10:55 AM

MAYNARD & ACTON
ASSABET RIVER RAIL TRAIL

STATE	FED. AID PROJ. NO.	SHEET NO.	TOTAL SHEETS
MA	-	207	214
PROJECT FILE NO.	604531		

CROSS SECTIONS
SYLVIA STREET

HOR. SCALE IN FEET
4 0 4 8
4 0 4 8
VER. SCALE IN FEET

501+00

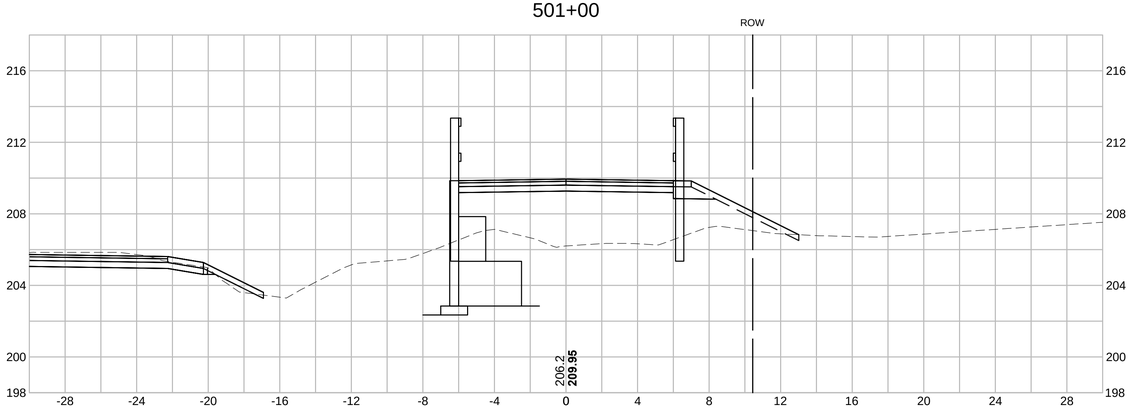

501+75

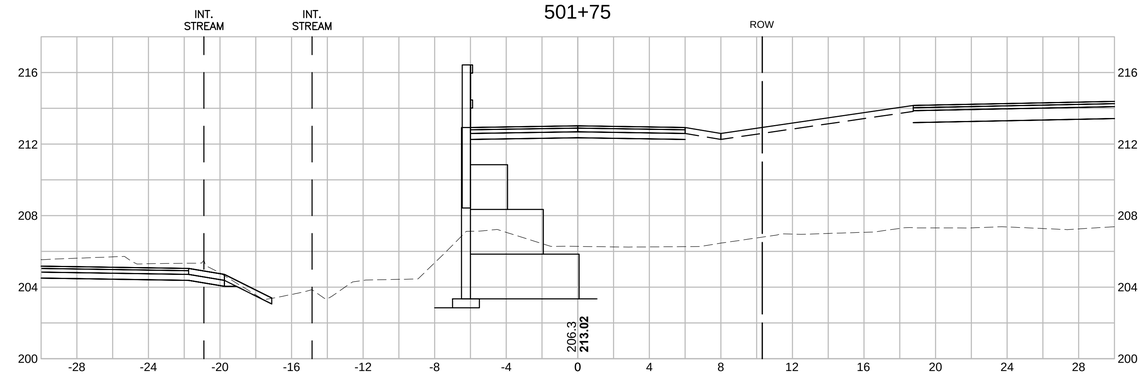

500+75

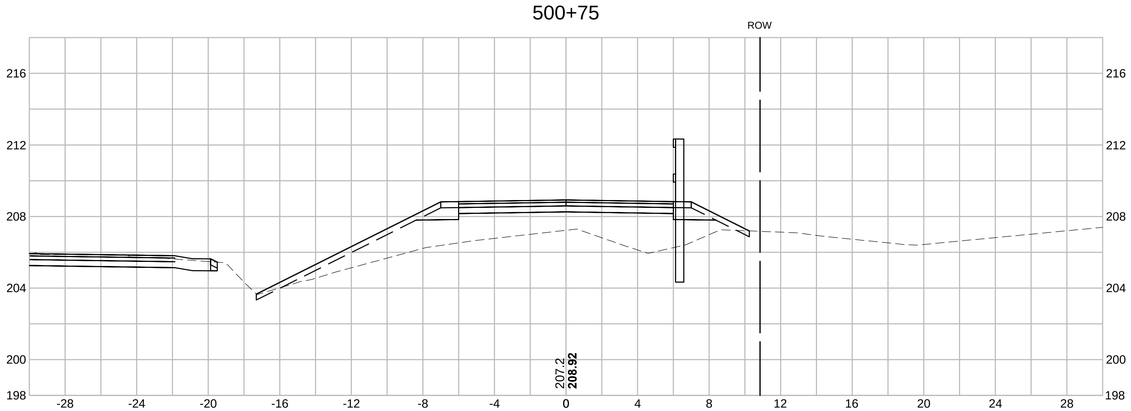

501+50

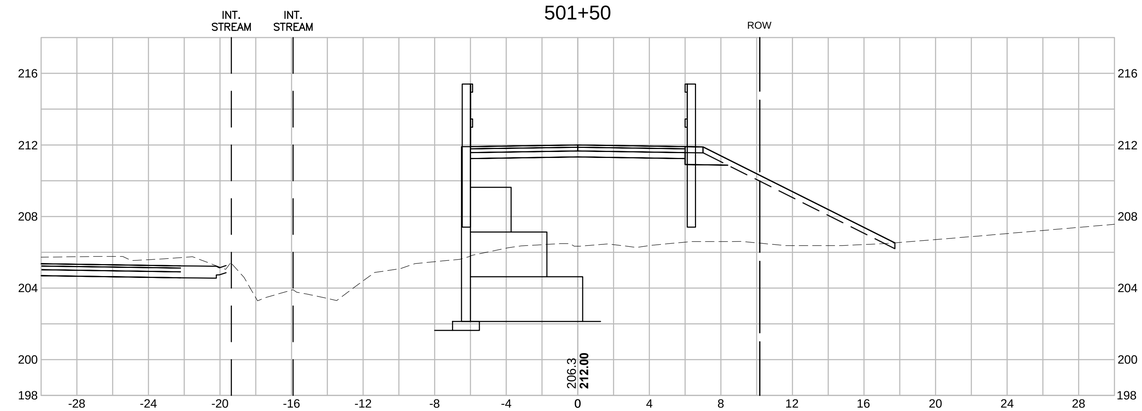

500+50

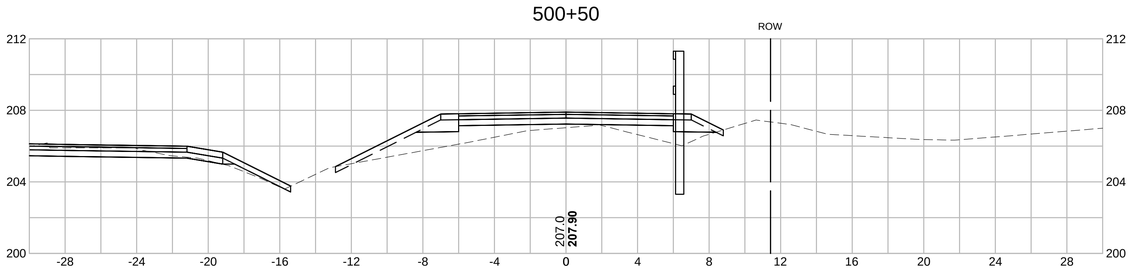

501+25

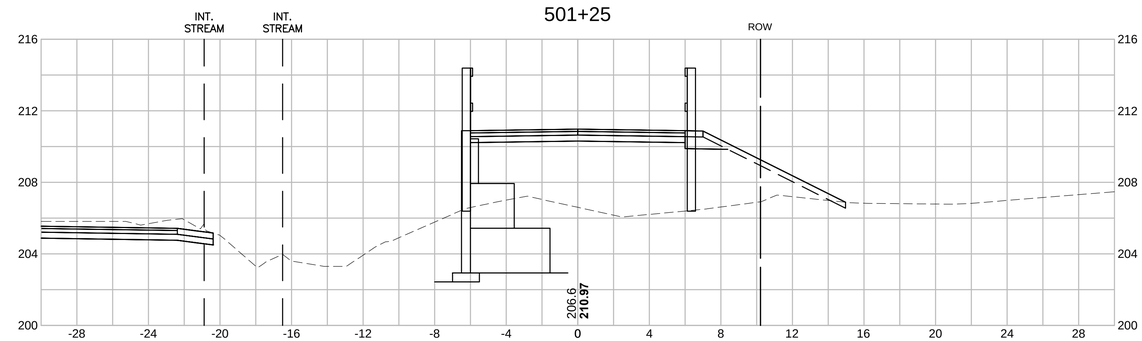

604531_HD(XS).DWG Plotted on 3-Apr-2015 10:56 AM

HOR. SCALE IN FEET
4 0 4 8
4 0 4 8
VER. SCALE IN FEET

MAYNARD & ACTON
ASSABET RIVER RAIL TRAIL

STATE	FED. AID PROJ. NO.	SHEET NO.	TOTAL SHEETS
MA	-	208	214
PROJECT FILE NO.	604531		

CROSS SECTIONS
SYLVIA STREET

604531_HD(XS).DWG Plotted on 3-Apr-2015 10:56 AM

502+50

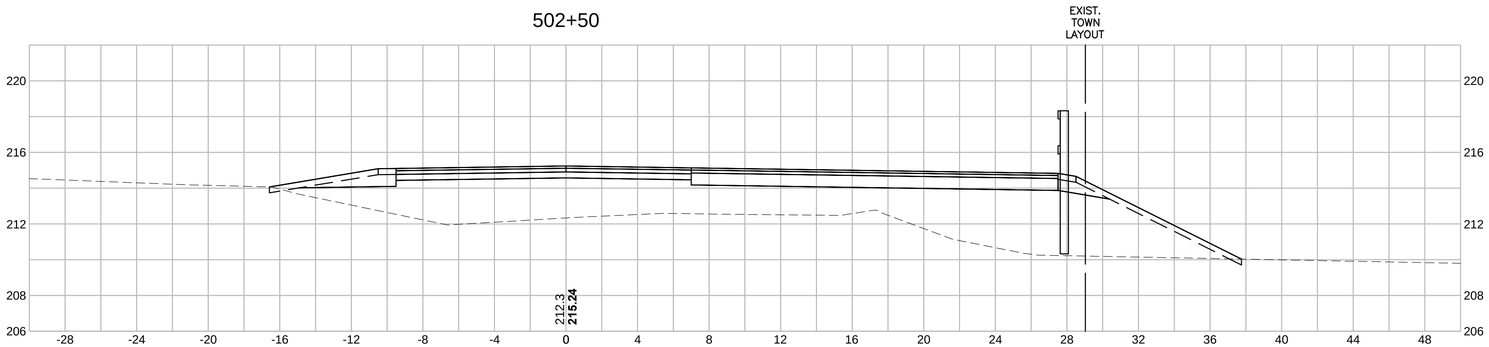

502+25

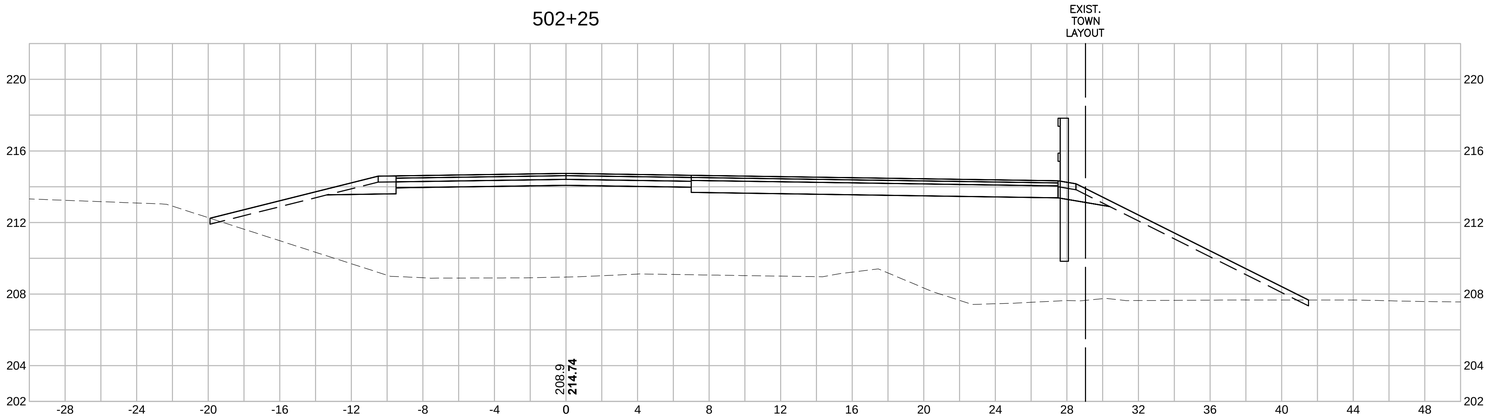

502+00

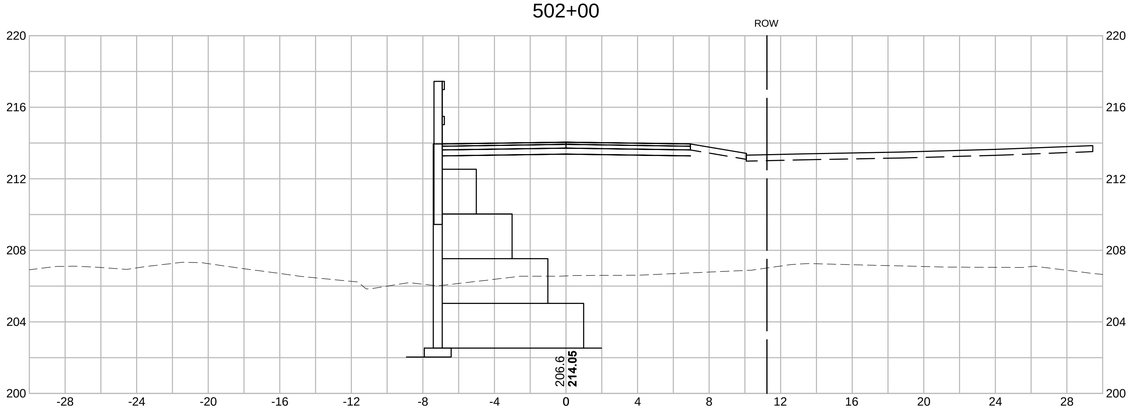
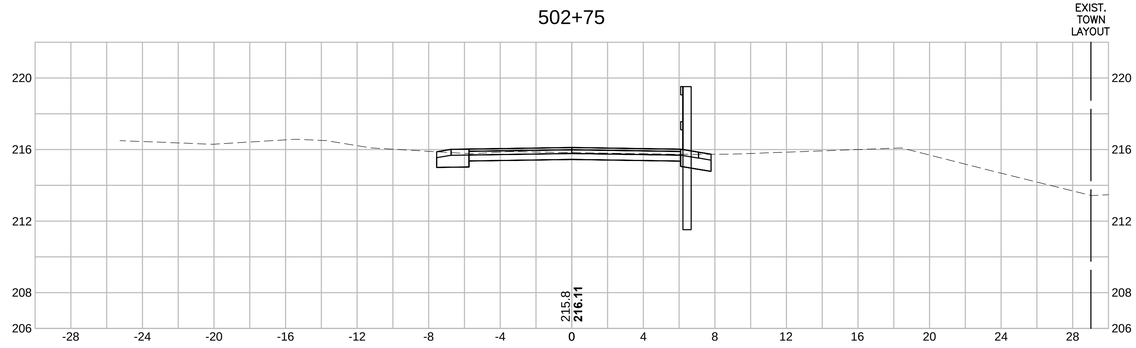
502+75