PROPOSED SITE DEVELOPMENT PLANS

FOR

BUILDING AND PARKING LOT EXPANSION

SPECIAL PERMIT

ACTON, MASSACHUSETTS
MAP F3, PARCEL 1

MAY 28, 2015

SHEET INDEX: SITE CIVIL

SHEET NO.	SHEET TITLE
C-1.0	COVER SHEET
C-2.0	LEGEND AND GENERAL NOTES
C-3.0	EXISTING CONDITIONS PLAN
C-4.0	LAYOUT AND MATERIALS PLAN
C-4.1	LAYOUT AND MATERIALS PLAN
C-5.0	GRADING, DRAINAGE, UTILITY & EROSION CONTROL PLAN
C-5.1	GRADING, DRAINAGE, UTILITY & EROSION CONTROL PLAN
C-6.0	LANDSCAPE PLAN
C-6.1	LANDSCAPE PLAN
C-7.0	SITE LIGHTING PLAN
C-7.1	SITE LIGHTING DETAILS
C-8.0	DETAILS
C-9.0	DETAILS

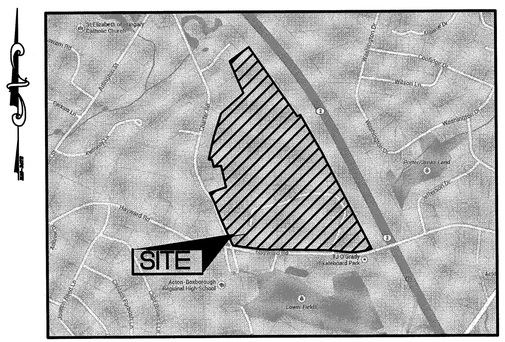

LOCATION MAP

SCALE: N.T.S.

PROJECT CONTACTS:

CIVIL ENGINEER/LAND SURVEYOR

MBL LAND DEVELOPMENT & PERMITTING, CORP.
480 TURNPIKE STREET
SOUTH EASTON, MA 02375
P.508.297.2746
F.508.297.2756
BRIAN M. DUNN PRIMARY CONTACT
brian@MBLLandDevelopment.com
website:info@MBLLandDevelopment.com

PLANS PREPARED FOR:

APPLICANT

HAARTZ CORPORATION
87 HAYWARD ROAD

ACTON MASSACHUSETTS

PLANS PREPARED BY:

MBL
LAND DEVELOPMENT & PERMITTING, CORP.
LAND DEVELOPMENT, TRANSPORTATION AND ENVIRONMENTAL SOLUTIONS
480 TURNPIKE STREET
SOUTH EASTON, MA 02375
P.508.297.2746 F.508.297.2756
EMAIL:info@MBLLandDevelopment.com
WEBSITE: www.MBLLandDevelopment.com

PROJ. No.: 2014-028
DATE: MAY 28,2015

C-1.0

X:\2014\028\CIVIL\PLOT\2014-028 COV.dwg 5/27/2015 11:08:24 AM EDT

LEGEND

EXIST	PROP	
L=50.00'		PROPERTY LINE
		PROJECT LIMIT LINE
		RIGHT-OF-WAY/PROPERTY LINE
		EASEMENT
		BUILDING SETBACK
		STATE HIGHWAY BASELINE
10+00	10+00	BASELINE
		CONSTRUCTION LAYOUT
		ZONING LINE
		TOWN LINE
		STATE LINE
		GRAVEL ROAD
EOP	EOP	EDGE OF PAVEMENT
BC	BC	BITUMINOUS CURB
CCB	CCB	CAPE COD BERM
PCC	PCC	PRECAST CONC. CURB
VGC	VGC	VERT. GRAN. CURB
SGC	SGC	SLOPED GRAN. CURB
		LIMIT OF CURB TYPE
		SAWCUT
	MATCHLINE SEE SHEET 1 OF 30	MATCHLINE
SWL	SWL	SOLID WHITE LINE
SYL	SYL	SOLID YELLOW LINE
BWL	BWL	BROKEN WHITE LINE
BYL	BYL	BROKEN YELLOW LINE
SWCHL	SWCHL	SOLID WHITE CHANNELIZING LINE
SYCHL	SYCHL	SOLID YELLOW CHANNELIZING LINE
DYL	DYL	DOUBLE YELLOW LINE
SL	SL	STOP LINE
		STEEL GUARD RAIL
		WOOD GUARD RAIL
		STOCKADE FENCE
		PATH
		TREE LINE
		CHAIN LINK FENCE
		STONE WALL
		RETAINING WALL
		HAY BALES
2	4	MINOR CONTOUR
10	20	MAJOR CONTOUR
TS	TS	TOP of SLOPE
BS	BS	BOTTOM of SLOPE
		BUILDING
EN	EN	BUILDING ENTRANCE
LD	LD	LOADING DOCK
OHD	OHD	OVERHEAD DOOR
		BOLLARD
D	D	DUMPSTER PAD
		SIGN
		DOUBLE SIGN
PM	PM	PARKING METER
	10	PARKING COUNT
	C10	COMPACT PARKING STALLS
		CROSSWALK
		CROSSWALK
		CONC. PAVEMENT
		STANDARD DUTY FLEXIBLE PAVEMENT
		HEAVY DUTY FLEXIBLE PAVEMENT
		HANDICAP RAMP
		HANDICAP PARKING
	VAN	VAN-ACCESSIBLE HANDICAP PARKING
		CART CORRAL
Detail no. / Sheet no.	100 / C-#	CIVIL DETAIL (SEE CIVIL DRAWINGS)

EXIST	PROP	
12"D		DRAINAGE LINE
OD	OD	OVERFLOW DRAIN
6"RD	RD	ROOF DRAIN
S	S	SEWER LINE
OHW	OHW	OVERHEAD ELECTRIC, TELEPHONE & FIRE ALARM
W	W	WATER LINE
FP	FP	FIRE PROTECTION LINE
G	G	GAS LINE
E	E	UNDERGROUND ELECTRIC
T	T	TELEPHONE LINE
FA	FA	FIRE ALARM
F&P	F&P	FIRE & POLICE CABLE
CATV	CATV	CABLE TV
	CB	CATCH BASIN
	DCB	DOUBLE CATCH BASIN
	DI	DRAIN INLET
	DMH	DRAIN MANHOLE
TD	TD	TRENCH DRAIN
		PLUG/STUB
FES	FES	FLARED END SECTION
		HEADWALL
GT	GT	GREASE TRAP
CS	CS	CONTROL STRUCTURE
	SMH	SEWER MANHOLE
		WATER MANHOLE
	WG	WATER GATE
TSV	TSV	TAPPING SLEEVE, VALVE, & BOX RISER
		PRESSURE REDUCER
		SIAMESE CONNECTION
	HYD	FIRE HYDRANT
WM	WM	WATER METER
PIV	PIV	POST INDICATOR VALVE
		WELL
		SPRINKLER HEAD
	GG	GAS GATE
GM	GM	GAS METER
	EMH	ELECTRIC MANHOLE
EB	EB	ELECTRIC BOX
EM	EM	ELECTRIC METER
		LIGHT POLE
		FLOOD LIGHT
		LIGHT POLE (SINGLE)
		SINGLE LUMINAIRE
		DOUBLE LUMINAIRE
		TRIPLE LUMINAIRE
		QUAD LUMINAIRE
		WALL PACK
		TELEPHONE MANHOLE
TS	TS	TRAFFIC SIGNAL
S	S	SIGNAL BOX
FACP	FACP	FIRE ALARM CONTROL PANEL
FB	FB	FIRE ALARM BOX
T	T	TRANSFORMER PAD
		MANHOLE
		UTILITY POLE/GUY WIRE
HH	HH	HAND HOLE
PB	PB	PULL BOX
		SILT FENCE/HAYBALE
		DIVERSION BERM/SWALE AND HAY BALE CHECK DAM
	PI	POINT OF INTERSECTION
		FLARED END SECTION (FES) WITH STONE PROTECTION
	6"PD	PERIMETER DRAIN
		PAVED WATERWAY (PWW) WITH STONE PROTECTION
		JUTE MAT IN SWALE
		TREES
		SHRUB

EXIST	PROP	
LP	LP	LOW POINT
HP	HP	HIGH POINT
GB	GB	GRADE BREAK
27.21 TC 27.15 BC	27.21 TC 27.15 BC	TOP & BOTTOM ELEVATION
21.25	21.25	SPOT ELEVATION w/LEADER
21 × 25	21 × 25	SPOT ELEVATION
		BORING LOCATION
		TEST PIT LOCATION
		TEST WELL
		BENCH MARK
		SWAMP
		50' WETLAND SETBACK
		100' WETLAND SETBACK
		200' WETLAND SETBACK
		100' WETLAND BUFFER
		WETLAND
52	52	WETLAND FLAG
		100 YEAR FLOOD PLAIN
		MITIGATION AREA LINE
		EDGE OF WATER

ABBREVIATIONS

GENERAL

PROP	PROPOSED	PWW	PAVED WATER WAY
MIN	MINIMUM	UP	UTILITY POLE
MAX	MAXIMUM	TSV&B	TAPPING SLEEVE, VALVE AND BOX
RET	RETAIN	COND	CONDUIT
REM	REMOVE	SWCPP	SMOOTH WALLED CORRUGATED POLYETHYLENE PIPE
REMOD	REMODEL	DS	DOWN SPOUT
ABAN	ABANDON	CS	CURB STOP FOR WATER LINE
ADJ	ADJUST	PD	PERFORATED DRAIN
EXIST	EXISTING	ID	INTERCEPTOR DRAIN
R&R	REMOVE AND RESET	PDRA	PREVIOUSLY DISTURBED RIVER FRONT AREA
R&S	REMOVE AND STACK	SD	STORM DRAIN
FDN	FOUNDATION	W	WATER
ELEV	ELEVATION	S	SEWER
BOS	BOTTOM OF SLOPE	E	ELECTRIC
TOS	TOP OF SLOPE	T	TELEPHONE
SGE	SLOPED GRANITE EDGING	G	GAS
		R&R	REMOVE & RESET
VGC	VERTICAL GRANITE CURB		
GC	GRANITE CURB		
GE	GRANITE EDGING		
PCC	CONCRETE CURB		
BB	BITUMINOUS BERM		
BC	BITUMINOUS CURB		
CCB	CAPE COD BERM		
MCC	MONOLITHIC CONCRETE CURB		
NIC	NOT IN CONTRACT		
NTS	NOT TO SCALE		
TYP	TYPICAL		
APPROX	APPROXIMATE		
EQ.	EQUAL		
LA	LANDSCAPE AREA		
UON	UNLESS OTHERWISE NOTED		
VIF	VERIFY IN FIELD		
TC	TOP OF CURB		
BC	BOTTOM OF CURB		
HP	HIGH POINT		
LP	LOW POINT		
GB	GRADE BREAK		
TOW	TOP OF WALL		
BOW	BOTTOM OF WALL		

UTILITY

CIT	CHANGE IN TYPE
F&G	FRAME AND GRATE
F&C	FRAME AND COVER
RCP	REINFORCED CONCRETE PIPE
VCP	VITRIFIED CLAY PIPE
PVC	POLYVINYL CHLORIDE PIPE
CMP	CORRUGATED METAL PIPE
ACCMP	ASPHALT COATED CORRUGATED METAL PIPE
CIP	CAST IRON PIPE
DIP	DUCTILE IRON PIPE
HYD	HYDRANT
CAP	CORRUGATED ALUMINUM PIPE
INV	INVERT ELEVATION

GENERAL NOTES

1. EXISTING CONDITIONS INFORMATION

A. BASE PLAN:

EXISTING TOPOGRAPHICAL INFORMATION (INCLUDING EXISTING FEATURES) WAS BASED ON AN ON THE GROUND FIELD SURVEY IN JUNE OF 2014 PREPARED BY MBL LAND DEVELOPMENT & PERMITTING CORP.

B. FLOOD ZONE:

THE SUBJECT SITE LIES WITHIN A FEMA FLOOD ZONE X, AN AREA DETERMINED TO BE AREAS OF 0.2% ANNUAL CHANCE FLOOD; AREAS OF 1% ANNUAL CHANCE OF FLOOD WITH AVERAGE DEPTHS OF LESS THAN 1 FOOTOR WITH DRAINAGE AREAS LESS THAN 1 SQUARE MILE; AND AREAS PROTECTED BY LEVEES FROM 1% ANNUAL CHANCE FLOOD, AS DEPICTED BY THE FLOOD INSURANCE RATE MAPS FOR THE TOWN OF ACTON MASSACHUSETTS, COMMUNITY PANEL NO. 25017C0352F 352 OF 656, DATED JULY 7, 2014.

C. UTILITIES:

THE LOCATIONS OF EXISTING UNDERGROUND UTILITIES SHOWN ARE APPROXIMATE ONLY AND HAVE NOT YET BEEN INDEPENDENTLY VERIFIED BY THE OWNER OR ITS REPRESENTATIVE. THE CONTRACTOR SHALL DETERMINE THE EXACT LOCATION OF ALL EXISTING UTILITIES PRIOR TO COMMENCING WORK, AND AGREES TO BE FULLY RESPONSIBLE FOR ANY AND ALL DAMAGES WHICH MAY BE OCCASIONED BY THE CONTRACTOR'S FAILURE TO EXACTLY LOCATE AND PRESERVE ANY AND ALL UNDERGROUND UTILITIES. THE CONTRACTOR IS TO CONTACT 'DIG SAFE' AT 811, SEVENTY-TWO (72) HOURS PRIOR TO ANY EXCAVATION PERFORMED ON SITE.

2. MATERIALS

A. CURBING:

ALL CURBING SURROUNDING THE BUILDING SHALL BE AS NOTED ON PLANS. ALL CURBING WITHIN THE TOWN RIGHT-OF-WAY SHALL MATCH EXISTING CURB MATERIAL.

B. PARKING AREAS AND ACCESS DRIVE:

BITUMINOUS PAVEMENT SHALL MEET THE REQUIREMENTS OF SECTION 400 OF THE MASSACHUSETTS HIGHWAY DEPARTMENT STANDARD SPECIFICATIONS FOR HIGHWAYS AND BRIDGES, LATEST EDITION, REVISIONS AND ALL CURRENT ADDENDA.

STANDARD:
SURFACE COURSE: 1.5 INCHES BITUMINOUS CONCRETE
BINDER COURSE: 1.5 INCHES BITUMINOUS BINDER
BASE COURSE: 12.0 INCHES COMPACTED GRAVEL: 6" OF GRADED GRAVEL AND 6" OF 3/4" PROCESSED GRAVEL

C. LANDSCAPE AREAS:

ALL SURFACED AREAS OR DISTURBED AREAS NOT SPECIFIED ON THE LANDSCAPE PLAN SHALL RECEIVE SIX (6) INCHES OF TOPSOIL, SEED, MULCH, AND BE WATERED UNTIL A HEALTHY STAND OF GRASS IS OBTAINED.

D. RETAINING WALL:

THE PROPOSED RETAINING WALLS SHALL BE OF BLOCK CONSTRUCTION AND SHALL BE CONSTRUCTED BY A QUALIFIED CONTRACTOR PER BEST PRACTICES. SHOP DRAWINGS ARE TO BE PREPARED BY PROFESSIONAL STRUCTURAL ENGINEER AND CONTRACTOR SHALL SUBMIT TO ENGINEER OF RECORD PRIOR TO CONSTRUCTION.

3. UTILITIES

A. LOCATION AND ELEVATIONS OF EXISTING UTILITIES

THE LOCATION AND ELEVATIONS OF ALL EXISTING UTILITIES AS SHOWN ON THESE PLANS ARE BASED ON THE INFORMATION AS REFERENCED IN THE EXISTING CONDITIONS INFORMATION PROVIDED ABOVE, AND SHALL BE VERIFIED BY THE CONTRACTOR PRIOR TO CONSTRUCTION.

B. STORM DRAINAGE:

UNLESS OTHERWISE NOTED, STORM DRAIN PIPING SHALL BE HDPE, HIGH DENSITY POLYETHYLENE PIPE, SMOOTH LINED (n=0.012) WITH LOCK TIGHT JOINTS. THE SIZES OF ALL PIPES ARE NOTED ON THE PLAN.

CATCH BASINS SHALL BE PRE CAST CONCRETE, AS SPECIFIED ON THE DETAIL SHEET. ALL CATCH BASINS SHALL BE SIX (6) FEET IN DIAMETER, HAVE A FOUR (4) FOOT MINIMUM SUMP, AND HAVE HOODS/SNOUTS INSTALLED AT THEIR OUTLETS.

4. PARKING STALLS SHALL BE AS FOLLOWS:

STANDARD PARKING: 9' x 18.5' MINIMUM

5. RESOURCE AREA NOTE:

THE EXISTING AND PROPOSED SITE PLANS ASSOCIATED WITH THIS PROJECT ARE NOT LOCATED WITH IN A RESOURCE AREA OR BUFFER ZONE TO A RESOURCE AREA

6. SNOW STORAGE NOTE:

ALL SNOW STORAGE WILL TAKE PLACE ON SITE

* (ALL REFERENCES TO "CONTRACTOR" SHALL MEAN THE GENERAL CONTRACTOR OR HIS SUB-CONTRACTORS.)

GENERAL CONSTRUCTION REQUIREMENTS

1.) THE CONTRACTOR SHALL VERIFY THE PROPOSED LAYOUT WITH ITS RELATIONSHIP TO THE EXISTING SITE SURVEY. THE CONTRACTOR SHALL ALSO VERIFY ALL DIMENSIONS, SITE CONDITIONS, AND MATERIAL SPECIFICATIONS AND SHALL NOTIFY THE OWNER AND ENGINEER OF ANY ERRORS, OMISSIONS OR DISCREPANCIES BEFORE COMMENCING OR PROCEEDING WITH WORK.

2.) THE SITE CONTRACTOR SHALL BE RESPONSIBLE FOR OBTAINING ALL NECESSARY PERMITS, INSPECTIONS, BONDS, ETC. AND OTHER APPROVAL RELATED ITEMS WITH THE TOWN OF ACTON AND MASSACHUSETTS HIGHWAY DEPARTMENT. NO CONSTRUCTION SHALL COMMENCE UNTIL SUCH PERMITS HAVE BEEN SECURED.

3.) METHODS AND MATERIALS USED IN THE CONSTRUCTION OF IMPROVEMENTS FOR THIS PROJECT SHALL CONFORM TO THE CURRENT CONSTRUCTION STANDARDS AND SPECIFICATIONS OF THE MASSACHUSETTS HIGHWAY DEPARTMENT AND THE TOWN OF ACTON

4.) DEVIATIONS OR CHANGES FROM THESE PLANS WILL NOT BE ALLOWED UNLESS APPROVED BY THE ENGINEER/OWNER.

5.) CONTRACTOR TO CONFIRM AND VERIFY THE VALIDITY, LOCATION, MATERIAL, AND AVAILABILITY TO USE EXISTING UTILITIES ON OR NEAR THE PROJECT SITE PROPERTY. CONTRACTOR TO LOCATE EXISTING UTILITIES AND CONFIRM SAID UTILITIES WITH ALL APPLICABLE MUNICIPALITIES AND UTILITY COMPANIES PRIOR TO ANY CONSTRUCTION. ONCE UTILITIES HAVE BEEN CONFIRMED IN THE FIELD BY CONTRACTOR AND VERIFIED BY APPLICABLE MUNICIPALITY AND UTILITY COMPANY AND CONNECTION HAS BEEN APPROVED BY ENTITY, ONLY THEN SHALL CONTRACTOR CONSTRUCT AND UTILIZE THESE UTILITIES. CONTRACTOR TO IMMEDIATELY INFORM ENGINEER OF RECORD OF ANY DEVIATIONS TO PLANS.

6.) THE CONTRACTOR SHALL MAKE EXPLORATORY EXCAVATIONS AND LOCATE ANY EXISTING UTILITIES SUFFICIENTLY AHEAD OF CONSTRUCTION TO PERMIT REVISIONS TO PLANS IF NECESSARY. THE EXISTENCE AND/OR LOCATION OF UTILITIES SHOWN ON THESE PLANS MAY BE ONLY APPROXIMATELY CORRECT AND THE CONTRACTOR IS REQUIRED TO TAKE PRECAUTIONARY MEASURES TO PROTECT THE UTILITIES SHOWN HEREON AND ANY OTHER EXISTING UTILITIES NOT OF RECORD OR NOT SHOWN ON THESE PLANS. THE CONTRACTOR SHALL BE RESPONSIBLE FOR REPAIRING, AT HIS EXPENSE, ANY EXISTING UTILITIES DAMAGED DURING CONSTRUCTION.

7.) THE CONTRACTOR SHALL NOTIFY OPERATORS WHO MAINTAIN UNDERGROUND UTILITY LINES IN THE AREA OF PROPOSED EXCAVATION OR BLASTING AT LEAST TWO WORKING DAYS, BUT NOT MORE THAN TEN WORKING DAYS, PRIOR TO COMMENCEMENT OF EXCAVATION OR DEMOLITION. ALL WATER, GAS, SEWER AND OTHER UTILITIES SHALL BE MAINTAINED AT ALL TIMES DURING CONSTRUCTION.

8.) RELOCATION OF ANY UTILITIES SHALL BE AT THE OWNERS EXPENSE AND COMPLETED WITH THE UTILITY WORK. THE OWNER SHALL BE NOTIFIED AS TO THE RELOCATION REQUIRED PRIOR TO THE START OF CONSTRUCTION.

GENERAL CONSTRUCTION REQUIREMENTS (CONTINUED)

9.) THE CONTRACTOR SHALL BE RESPONSIBLE FOR REPLACING, WITH MATCHING MATERIALS, ANY PAVEMENT, WALKS, CURBS, ETC. THAT MUST BE CUT OR THAT ARE DAMAGED DURING CONSTRUCTION.

10.) AN APPROVED SET OF PLANS AND ALL APPLICABLE PERMITS MUST BE AVAILABLE AT THE CONSTRUCTION SITE AT ALL TIMES.

11.) CONTRACTOR AGREES THAT HE SHALL ASSUME SOLE AND COMPLETE RESPONSIBILITY FOR JOB SITE CONDITIONS DURING THE COURSE OF CONSTRUCTION OF THIS PROJECT, INCLUDING SAFETY OF ALL PERSONS AND PROPERTY; THAT THIS REQUIREMENT SHALL APPLY CONTINUOUSLY AND NOT BE LIMITED TO NORMAL WORKING HOURS; AND THAT THE CONTRACTOR SHALL DEFEND, INDEMNIFY AND HOLD THE OWNER AND THE ENGINEER HARMLESS FROM ANY AND ALL LIABILITY, REAL AND ALLEGED, IN CONNECTION WITH THE PERFORMANCE OF WORK ON THIS PROJECT, EXCEPTING FOR LIABILITY ARISING FROM "THE SOLE NEGLIGENCE OF THE OWNER OR THE ENGINEER." THE CONTRACTOR IS RESPONSIBLE FOR INSTALLING A PROTECTIVE BARRIER AROUND THE SITE PRIOR TO AND DURING CONSTRUCTION.

12.) THE CONTRACTOR IS RESPONSIBLE TO INSTALL AND MAINTAIN ALL EROSION AND SEDIMENTATION CONTROL DEVICES.

13.) WHERE AN EXISTING UTILITY IS FOUND TO CONFLICT WITH THE PROPOSED WORK, THE LOCATION, ELEVATION AND SIZE OF THE UTILITY SHALL BE ACCURATELY DETERMINED WITHOUT DELAY BY THE CONTRACTOR, AND THE INFORMATION FURNISHED TO THE ENGINEER FOR RESOLUTION OF THE CONFLICT.

14.) THE CONTRACTOR SHALL MAKE ALL ARRANGEMENTS WITH THE APPROPRIATE UTILITY COMPANIES FOR POLE RELOCATION, AND FOR THE ALTERATION AND ADJUSTMENT OF GAS, ELECTRIC, TELEPHONE, CABLE, FIRE ALARM, WATER, SANITARY SEWER, STORM DRAIN, AND ANY OTHER UTILITIES, BOTH PUBLIC AND PRIVATE, AS REQUIRED.

15.) THE CONTRACTOR SHALL NOTIFY ALL UTILITY COMPANIES, PUBLIC AND PRIVATE, INCLUDING THOSE IN CONTROL OF UTILITIES NOT SHOWN ON THIS PLAN, (SEE CHAPTER 370, ACTS OF 1963, MASSACHUSETTS) PRIOR COMMENCING ANY WORK.

16.) MBL LAND DEVELOPMENT & PERMITTING, CORP. ASSUMES NO RESPONSIBILITY FOR DAMAGES INCURRED AS A RESULT OF UTILITIES OMITTED OR INACCURATELY SHOWN.

17.) THE TERM "PROPOSED" (PROP.) MEANS WORK TO BE CONSTRUCTED USING NEW MATERIALS OR, WHERE APPLICABLE, RE-USING EXISTING MATERIALS IDENTIFIED AS "REMOVE AND RESET". (R&R)

18.) UPON AWARD OF CONTRACT, CONTRACTOR SHALL MAKE ALL NECESSARY CONSTRUCTION NOTIFICATIONS AND APPLY FOR AND OBTAIN ALL NECESSARY PERMITS, PAY ALL FEES AND POST ALL BONDS ASSOCIATED WITH SAME, AND COORDINATE WITH THE ENGINEER AS REQUIRED.

19.) THE CONTRACTOR SHALL BE RESPONSIBLE FOR VERIFYING THAT THE PROPOSED IMPROVEMENTS SHOWN ON THE PLANS DO NOT CONFLICT WITH ANY KNOWN EXISTING INFORMATION OR OTHER PROPOSED IMPROVEMENTS. IF ANY CONFLICTS ARE DISCOVERED, THE CONTRACTOR MUST NOTIFY THE OWNER OR ENGINEER IMMEDIATELY UPON DISCOVERY AND AT LEAST 72 HOURS PRIOR TO INSTALLATION OF ANY PORTION OF THE AFFECTED WORK.

20.) THE CONTRACTOR SHALL REFER TO ARCHITECTURAL AND STRUCTURAL DRAWINGS FOR ALL BUILDING DIMENSIONS AND CONSTRUCTION. BUILDING DIMENSIONS ARE SHOWN FOR COORDINATION WITH OTHER SITE WORK ONLY AND SHOULD NOT BE USED TO STAKE OUT BUILDINGS. SITE CONTRACTOR SHALL STAKE OUT THE EXTERIOR BUILDING CORNERS FROM THE LATEST ARCHITECTURAL PLANS. THE CONTRACTOR SHALL NOTIFY MBL LAND DEVELOPMENT & PERMITTING, CORP. OF ANY DISCREPANCIES BETWEEN SITE PLAN DIMENSIONS AND ARCHITECTURAL BUILDING PLANS BEFORE PROCEEDING WITH ANY PORTION OF SITE WORK WHICH MAY BE EFFECTED SO THAT PROPER ADJUSTMENTS TO THE SITE LAYOUT CAN BE MADE IF NECESSARY. ALSO, NO BARK MULCH IS ALLOWED IN THE LANDSCAPE AREAS WITHIN 18-INCHES OF THE BUILDING FOUNDATION WALL AT ANY TIME.

21.) PRIOR TO THE START OF CONSTRUCTION THE CONTRACTOR SHALL SUBMIT A SCHEDULE OF OPERATIONS TO THE OWNER AND ITS REPRESENTATIVE. THE CONTRACTOR SHALL NOTIFY AND COORDINATE WITH THE OWNER, ITS ENGINEER OR REPRESENTATIVE.

22.) CONTRACTOR SHALL BE SOLELY RESPONSIBLE FOR JOB SITE SAFETY AND ALL CONSTRUCTION MEANS AND METHODS. MBL LAND DEVELOPMENT & PERMITTING, CORP. DOES NOT ASSUME ANY RESPONSIBILITY IN JOB SITE SAFETY FOR CONSTRUCTION METHODS USED. ALL FEDERAL, STATE, AND LOCAL OSHA REQUIREMENTS AND REGULATIONS SHALL BE FOLLOWED BY ALL PERSONNEL ON THE JOB SITE AT ALL TIMES.

23.) THE CONTRACTOR SHALL REMOVE ALL STUMPS, RUBBISH, UNSUITABLE MATERIAL AND DEBRIS FROM THE SITE PROJECT SITE. STORAGE OF THESE ITEMS WILL NOT BE PERMITTED ON THE PROJECT SITE. THE CONTRACTOR SHALL LEAVE THE SITE IN A SAFE, CLEAN, AND LEVEL CONDITION AT THE COMPLETION OF THE SITE CLEARANCE WORK.

24.) ALL UNSUITABLE MATERIALS ENCOUNTERED WITHIN THE LIMIT OF WORK SUB GRADES SHALL BE REMOVED, AS DIRECTED BY THE ENGINEER OR OWNERS REPRESENTATIVE, TO NATURAL STABLE GROUND BY THE CONTRACTOR. UNSUITABLE MATERIALS INCLUDE TOPSOIL, LOAM, PEAT, ALL ORGANIC MATERIAL, SNOW, ICE, CONSTRUCTION RUBBLE, TRASH, AND OTHER DELETERIOUS DEBRIS.

25.) AREAS OUTSIDE THE LIMITS OF PROPOSED WORK DISTURBED BY THE CONTRACTOR'S OPERATIONS, WITHOUT PRIOR APPROVAL BY THE OWNER OR ITS REPRESENTATIVE, SHALL BE RESTORED BY THE CONTRACTOR TO THEIR ORIGINAL CONDITION AT THE CONTRACTOR'S EXPENSE.

26.) EXISTING SUBSURFACE ROCK/LEDGE IS NOT SHOWN ON THE PLANS. IT SHALL BE THE RESPONSIBILITY OF THE CONTRACTOR TO MAKE THEIR OWN DETERMINATION AS TO THE LOCATION OF SUBSURFACE ROCK.

27.) THE CONTRACTOR SHALL PROTECT ALL UNDERGROUND DRAINAGE, SEWER, AND UTILITY FACILITIES FROM EXCESSIVE VEHICULAR LOADS DURING CONSTRUCTION. ANY FACILITIES DAMAGED BY CONSTRUCTION LOADS SHALL BE REPAIRED BY THE CONTRACTOR AT THE CONTRACTOR'S EXPENSE.

28.) ALL EXISTING SIGNS WITHIN THE PROJECT LIMITS SHALL BE RETAINED UNLESS NOTED OTHERWISE.

29.) JOINTS BETWEEN NEW BITUMINOUS CONCRETE ROADWAY PAVEMENT AND SAW CUT EXISTING PAVEMENT SHALL BE SEALED WITH BITUMEN AND BACKSANDED.

30.) ALL PROPOSED WALKWAYS WILL BE HANDICAPPED ACCESSIBLE. ALL PROPOSED SLOPES ON WALKWAYS TO BE LESS THAN 5% AND ALL CROSS SLOPES £ 2%. ALL WORK WILL BE IN ACCORDANCE WITH THE MOST CURRENT REQUIREMENTS OF THE U.S. ACCESS BOARD, AMERICANS WITH DISABILITIES ACT & COMMONWEALTH OF MASSACHUSETTS, ARCHITECTURAL ACCESS BOARD.

GENERAL CONSTRUCTION REQUIREMENTS (CONTINUED)

31.) FINAL LAYOUT AND STAKING OF ALL PROPOSED FEATURES AND GRADING SHALL BE REVIEWED IN THE FIELD AND APPROVED BY THE OWNERS REPRESENTATIVE PRIOR TO ANY SITE PREPARATION OR CONSTRUCTION. THE CONTRACTOR SHALL NOT ADJUST OR MODIFY THE LAYOUT AND STAKING OF ANY PROPOSED FEATURES WITHOUT FINAL APPROVAL FROM THE OWNERS REPRESENTATIVE AND ANY GOVERNMENTAL AGENCY WHICH MAY HAVE JURISDICTION OVER CONTEMPLATED CHANGE.

32.) ALL ELECTRICAL, TELEPHONE, DATA/COM AND FIRE DEPARTMENT CONDUITS ARE TO BE INSTALLED BY THE ELECTRICAL CONTRACTOR. TRENCHING, BACK FILLING, CONCRETE WORK AND STREET REPAIR SHALL BE PERFORMED BY THE GENERAL CONTRACTOR.

33.) RIM ELEVATIONS OF DRAINAGE AND SANITARY SEWER MANHOLES ARE APPROXIMATE. FINAL ELEVATIONS ARE TO BE SET FLUSH AND CONSISTENT WITH GRADING PLANS. ADJUST ALL OTHER RIM ELEVATIONS OF MANHOLES, GAS GATES, WATER GATES AND OTHER UTILITIES TO FINISHED GRADE WITHIN THE LIMITS OF THE SITE WORK.

34.) ALL AREAS DISTURBED DURING CONSTRUCTION SHALL BE REPLACED IN KIND. LAWN AREAS SHALL HAVE A MODIFIED LOAM BORROW PLACED AND SEEDED. THE MODIFIED LOAM BORROW SHALL HAVE A MINIMUM DEPTH OF 6" AND SHALL BE PLACED FLUSH WITH THE TOP OF ADJACENT CURB, EDGING, BERM, OR OTHER SURFACE.

35.) THE CONTRACTOR SHALL WATER, MOW, FERTILIZE OR OTHERWISE MAINTAIN LAWN AREAS UNTIL SATISFACTORY GRASS STANDS ARE ACHIEVED TO THE OWNER OR ITS REPRESENTATIVE SATISFACTION.

36.) THE CONTRACTOR SHALL RESET ALL MONUMENTATION DISTURBED DURING CONSTRUCTION AT NO ADDITIONAL COST TO THE OWNER. THE CONTRACTOR SHALL PROVIDE A SURVEY BY A PLS TO ENSURE THAT THE MONUMENTATION IS RESET TO ITS ORIGINAL LOCATION. MONUMENTS INCLUDE, BUT ARE NOT LIMITED TO, TOWN BOUNDS, MASS HIGHWAY BOUNDS, PROPERTY LINE MONUMENTS, IRON RODS, STAKES, CONCRETE BOUNDS, GRANITE BOUNDS AND STONE WALLS WITH DRILL HOLES.

37.) ELEVATIONS ARE BASED ON ASSUMED ELEVATION ON RECORD PLANS.

38.) CONTRACTOR SHALL BE SOLELY RESPONSIBLE FOR JOB SITE SAFETY AND ALL CONSTRUCTION MEANS AND METHODS.

39.) THE CONTRACTOR SHALL CONFIRM LOCATION AND DEPTH OF EXISTING SEWER LINES BEFORE COMMENCING UTILITY INSTALLATION.

40.) THE CONTRACTOR SHALL PREPARE A REPORT OF THE EXISTING ASBESTOS, IF ANY WITHIN THE EXISTING BUILDINGS PRIOR TO DEMOLITION. IF REQUIRED, THIS REPORT SHALL BE SUBMITTED TO THE ACTON BOARD OF HEALTH AND THE MADEP LAKEVILLE, MA OFFICE.

STORM WATER MAINTENANCE PROGRAM

1.) ALL EROSION AND SEDIMENTATION CONTROL DEVICES TO BE USED FOR THIS PROJECT SHALL BE INSTALLED AND MAINTAINED AS SPECIFIED ON THESE PLANS AND IN VOLUME TWO OF THE STATE OF MASSACHUSETTS STORM WATER MANAGEMENT MANUAL.

PROPER EROSION AND SEDIMENT CONTROL PRACTICES MUST BE IMPLEMENTED DURING ALL PHASES OF CONSTRUCTION AND UNTIL THE SITE IS SATISFACTORILY STABILIZED. ALL CONTROL PRACTICES SHOULD BE IN ACCORDANCE WITH VOLUME TWO OF THE STATE OF MASSACHUSETTS STORM WATER MANAGEMENT MANUAL.

3.) THE CONTRACTOR IS RESPONSIBLE FOR THE MAINTENANCE AND/OR REPLACEMENT OF ALL TEMPORARY AND PERMANENT EROSION AND SEDIMENTATION CONTROL DEVICES TO ENSURE PROPER OPERATION THROUGHOUT THE LIFE OF THE PROJECT. THE CONTRACTOR SHALL CONDUCT THE FOLLOWING MAINTENANCE AT NO ADDITIONAL COST TO THE OWNER. THE CONTRACTOR IS RESPONSIBLE FOR THE MAINTENANCE OF PERMANENT MEASURES UNTIL CONSTRUCTION OF THE PROJECT IS COMPLETED OR UNTIL IT IS ACCEPTED BY THE OWNER. THE OWNER IS RESPONSIBLE THEREAFTER.

4.) TEMPORARY VEGETATIVE COVER SHALL BE APPLIED TO ANY DISTURBED AREAS (INCLUDING SOIL STOCKPILE AREAS) THAT HAVE NOT YET REACHED FINISHED GRADE AS SOON AS POSSIBLE, BUT NOT MORE THAN FOURTEEN (14) DAYS AFTER THE CONSTRUCTION ACTIVITY IN THAT AREA HAS TEMPORARILY CEASED, UNLESS THE ACTIVITY IS TO RESUME WITHIN TWENTY-ONE (21) DAYS.

5.) PERMANENT VEGETATIVE COVER SHALL BE APPLIED TO ALL DISTURBED AREAS THAT HAVE REACHED FINISHED GRADE AS SOON AS POSSIBLE, BUT NOT MORE THAN FOURTEEN (14) DAYS AFTER THE CONSTRUCTION ACTIVITY IN THAT AREA HAS PERMANENTLY CEASED. THE RECOMMENDED PERMANENT SEEDING DATES ARE APRIL 1 TO JUNE 15 AND AUGUST 15 TO OCTOBER 1.

6.) IF SEEDING CANNOT BE COMPLETED IMMEDIATELY OR WITHIN THE RECOMMENDED SEEDING DATES, USE THE TEMPORARY MULCHING MEASURE TO PROTECT THE SITE AND DELAY SEEDING UNTIL THE NEXT RECOMMENDED SEEDING PERIOD.

7.) AREAS WHICH HAVE BEEN TEMPORARILY OR PERMANENTLY SEEDED SHOULD BE MULCHED IMMEDIATELY FOLLOWING SEEDING IN ADDITION TO AREAS WHICH CANNOT BE SEEDED WITHIN THE RECOMMENDED SEEDING DATES AND ANY SOIL STOCKPILE AREAS. TEMPORARY MULCHING SHOULD BE PERFORMED AS SOON AS POSSIBLE, BUT NOT MORE THAN FOURTEEN (14) DAYS AFTER THE CONSTRUCTION ACTIVITY IN THAT AREA HAS TEMPORARILY CEASED UNLESS THE ACTIVITY IS TO RESUME WITHIN TWENTY-ONE (21) DAYS.

8.) ALL MULCHES MUST BE INSPECTED PERIODICALLY, IN PARTICULAR AFTER RAINSTORMS, TO CHECK FOR RILL EROSION. WHERE EROSION IS OBSERVED, ADDITIONAL MULCH MUST BE APPLIED. IF NETTING IS USED, THE NET SHOULD BE INSPECTED AFTER RAINSTORMS FOR DISLOCATION OR FAILURE. IF WASHOUTS OR BREAKAGE OCCUR, THE NET MUST BE REINSTALLED AS NECESSARY AFTER REPAIRING DAMAGE TO SLOPE. INSPECTIONS SHOULD TAKE PLACE UNTIL GRASSES ARE FIRMLY ESTABLISHED. GRASS IS CONSIDERED TO BE FIRMLY ESTABLISHED AT A MINIMUM HEIGHT OF THREE (3) INCHES.

9.) IT SHALL BE THE CONTRACTOR'S RESPONSIBILITY TO CONTROL DUST AND TAKE ALL NECESSARY MEASURES TO ENSURE ALL ROADS ARE MAINTAINED IN A DUST FREE CONDITION AT ALL TIMES THROUGHOUT THE LIFE OF THE CONTRACT. REPETITIVE TREATMENTS SHOULD BE APPLIED AS NECESSARY.

10.) ALL PROPOSED CONSTRUCTION ENTRANCES SHALL BE MAINTAINED IN A CONDITION THAT WILL PREVENT TRACKING OR FLOWING OF SEDIMENT ONTO THE SURROUNDING ROADWAYS. THIS WILL REQUIRE PERIODIC TOP DRESSING WITH ADDITIONAL STONE OR ADDITIONAL LENGTH AS CONDITIONS DEMAND AND REPAIR AND/OR CLEAN OUT OF ANY MEASURES USED TO TRAP SEDIMENT. ALL SEDIMENT SPILLED, DROPPED, WASHED, OR TRACKED ONTO THE SURROUNDING ROADWAYS MUST BE REMOVED IMMEDIATELY.

11.) INSPECTION OF PERIMETER SEDIMENT BARRIERS (INCLUDING THOSE ENCOMPASSING SOIL STOCKPILE AREAS) SHOULD BE MADE AFTER EACH STORM EVENT AND REPAIR OR REPLACEMENT SHOULD BE MADE PROMPTLY AS NEEDED. CLEAN OUT OF ACCUMULATED SEDIMENT BEHIND THE SILT FENCE IS NECESSARY IF ONE-HALF OF THE ORIGINAL HEIGHT OF THE BALES BECOMES FILLED IN WITH SEDIMENT.

12.) SILT SACKS HAVE BEEN PROPOSED IN ALL ON-SITE CATCH BASINS IN ORDER TO PREVENT SEDIMENT FROM ENTERING THE PROPOSED STORM DRAINAGE SYSTEM PRIOR TO PERMANENT STABILIZATION OF THE DISTURBED SITE. ALL SILT SACKS SHOULD BE INSPECTED AFTER EVERY RAIN STORM AND REPAIRS MADE AS NECESSARY. SEDIMENT SHOULD BE DISPOSED OF IN A SUITABLE AREA AND PROTECTED FROM EROSION BY EITHER STRUCTURAL OR VEGETATIVE MEANS. CATCH BASIN INLET PROTECTION SHOULD BE REMOVED AND THE AREA REPAIRED AS SOON AS THE CONTRIBUTING DRAINAGE AREA TO THE INLET HAS BEEN COMPLETELY STABILIZED.

13.) REPAIRS OR REPLACEMENT OF DRAINAGE STRUCTURES, RIP RAP CHANNELS, OR OTHER ELEMENTS OF THE FACILITY SHOULD BE DONE WITHIN 30 DAYS OF DEFICIENCY REPORTS. IF AN EMERGENCY SITUATION IS IMMINENT THEN REPAIR/REPLACEMENT MUST BE DONE IMMEDIATELY TO AVERT FAILURE OR DANGER TO NEARBY RESIDENTS.

14.) ALL PROPOSED CATCH BASINS AND THE EXTENDED DETENTION FACILITY SHALL BE CLEANED FOUR (4) TIMES PER YEAR, AT MINIMUM, AND INSPECTED MONTHLY. ALL SEDIMENTS AND HYDROCARBONS SHOULD BE PROPERLY HANDLED AND DISPOSED, IN ACCORDANCE WITH LOCAL, STATE, AND FEDERAL GUIDELINES AND REGULATIONS. SEDIMENT SHALL BE REMOVED WHEN 10% OF THE AVAILABLE CAPATOWN IS DEPLETED.

15.) THE PROPOSED EXTENDED DETENTION FACILITY SHALL BE INSPECTED AFTER EVERY MAJOR STORM FOR THE FIRST FEW MONTHS TO ENSURE PROPER STABILIZATION AND FUNCTION.

16.) IMMEDIATELY PRIOR TO THE END OF CONSTRUCTION OR ACCEPTANCE BY THE OWNER, THE CONTRACTOR SHALL INSPECT ALL ON-SITE CATCH BASINS AND THE EXTENDED DETENTION FACILITY AND CLEAN AND FLUSH AS NECESSARY.

No.	DATE	DESCRIPTION	BY
1			

REVISIONS

PROJ. MANAGER:	MBL
CHIEF DESIGNER:	MBL
REVIEWED BY:	DATE

SEAL

SEAL: COMMONWEALTH OF MASSACHUSETTS, JAMES E. MILLER, CIVIL, No. 31064, REGISTERED PROFESSIONAL ENGINEER

PREPARED FOR

HAARTZ CORPORATION
87 HAYWARD ROAD

ACTON MASSACHUSETTS

SCALE: HORZ.: VERT.:
DATUM: HORZ.: VERT.:
0
GRAPHIC SCALE

MBL
LAND DEVELOPMENT & PERMITTING, CORP.
LAND DEVELOPMENT, TRANSPORTATION AND ENVIRONMENTAL SOLUTIONS
480 TURNPIKE STREET
SOUTH EASTON, MA 02375
P.508.297.2746 F.508.297.2756
EMAIL:info@MBLLandDevelopment.com
WEB: www.MBLLandDevelopment.com

SITE DEVELOPMENT PLANS

GENERAL NOTES AND LEGEND

87 HAYWARD ROAD

ACTON MASSACHUSETTS

PROJ. No.: 2014-028
DATE: MAY 28, 2015

C-2.0

X:\2014\028\CIVIL\PLOT\2014-028 LEGEND.dwg 5/27/2015 1:12:59 PM EDT
UCS: WRLD | MS VIEW: vp20 | LMAN: | CTB: MBL Standard

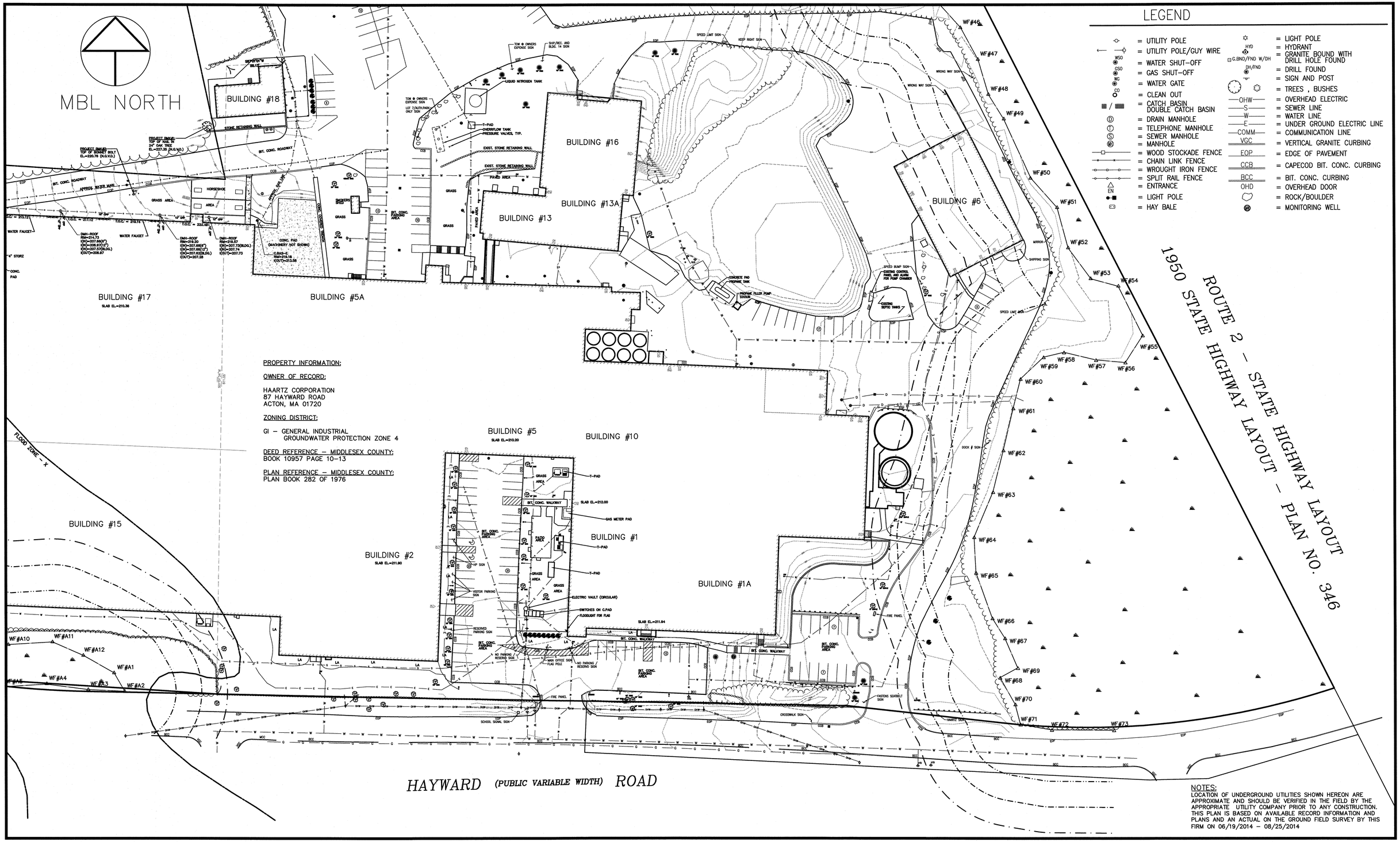

PROPERTY INFORMATION:

OWNER OF RECORD:

HAARTZ CORPORATION
87 HAYWARD ROAD
ACTON, MA 01720

ZONING DISTRICT:

GI – GENERAL INDUSTRIAL
GROUNDWATER PROTECTION ZONE 4

DEED REFERENCE – MIDDLESEX COUNTY:
BOOK 10957 PAGE 10–13

PLAN REFERENCE – MIDDLESEX COUNTY:
PLAN BOOK 282 OF 1976

NOTES:
LOCATION OF UNDERGROUND UTILITIES SHOWN HEREON ARE APPROXIMATE AND SHOULD BE VERIFIED IN THE FIELD BY THE APPROPRIATE UTILITY COMPANY PRIOR TO ANY CONSTRUCTION. THIS PLAN IS BASED ON AVAILABLE RECORD INFORMATION AND PLANS AND AN ACTUAL ON THE GROUND FIELD SURVEY BY THIS FIRM ON 06/19/2014 – 08/25/2014

No.	DATE	DESCRIPTION	BY
1			

REVISIONS

PROJ. MANAGER:	MBL
CHIEF DESIGNER:	MBL
REVIEWED BY:	DATE

SEAL

COMMONWEALTH OF MASSACHUSETTS
JAMES E. MILLER
No. 36385
PROFESSIONAL ENGINEER

PREPARED FOR
HAARTZ CORPORATION
87 HAYWARD ROAD
ACTON MASSACHUSETTS

SCALE:
HORZ.: 1" = 40'
VERT.:
DATUM:
HORZ.:
VERT.:
40 20 0 40
GRAPHIC SCALE

MBL
LAND DEVELOPMENT & PERMITTING, CORP.
LAND DEVELOPMENT, TRANSPORTATION AND ENVIRONMENTAL SOLUTIONS
480 TURNPIKE STREET
SOUTH EASTON, MA 02375
P.508.297.2746 F.508.297.2756
EMAIL:info@MBLLandDevelopment.com
WEB: www.MBLLandDevelopment.com

SITE DEVELOPMENT PLANS
EXISTING CONDITIONS PLAN

87 HAYWARD ROAD
ACTON MASSACHUSETTS

PROJ. No.: 2014-028
DATE: MAY 28, 2015

C-3.0

UCS: MS VIEW: LMAN: CTB:
X:\2014\028\SURVEY\PLOT\2014-028EXCD.dwg 5/28/2015 12:56:56 PM EDT

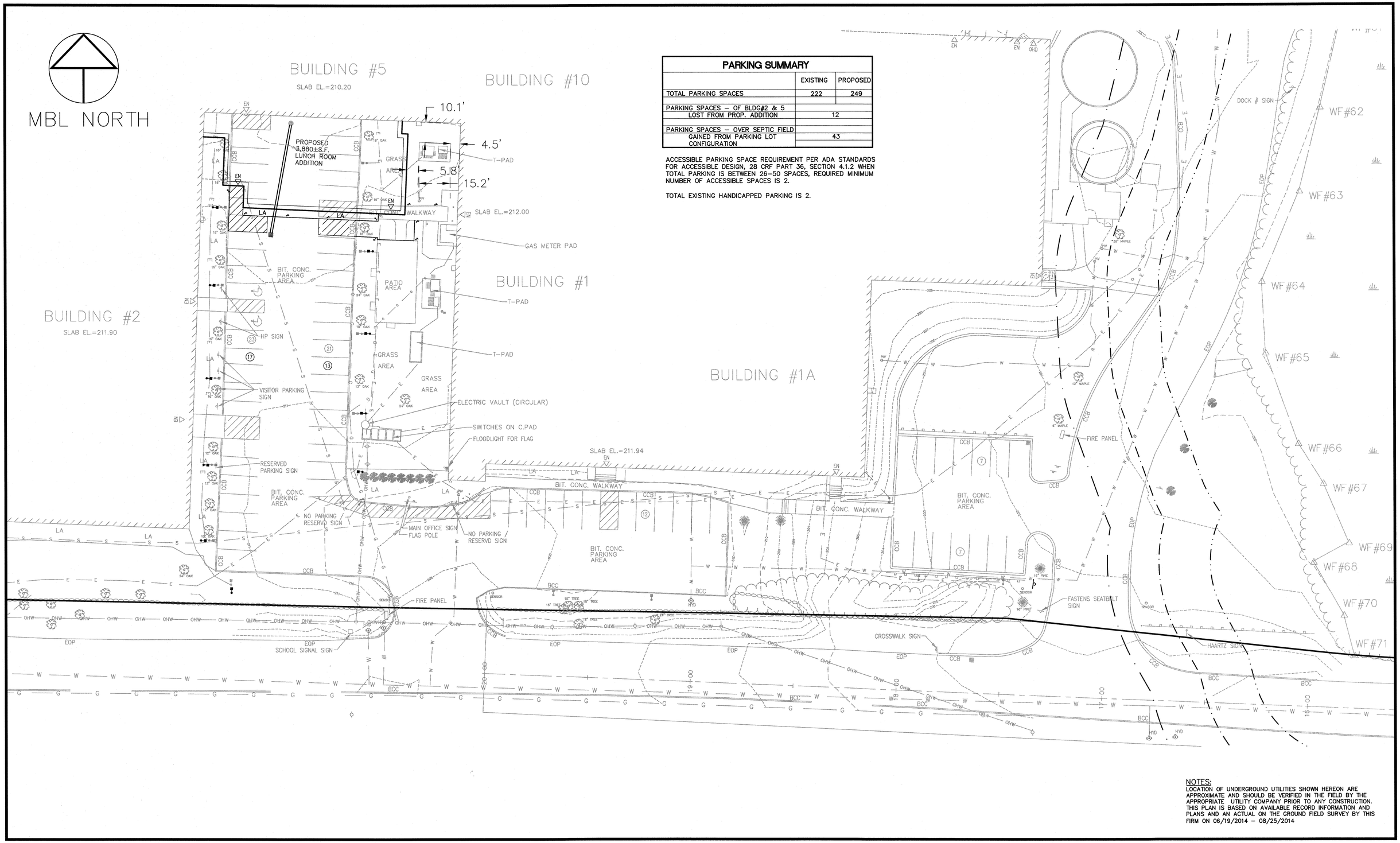

PARKING SUMMARY

	EXISTING	PROPOSED
TOTAL PARKING SPACES	222	249
PARKING SPACES – OF BLDG#2 & 5 LOST FROM PROP. ADDITION	12	
PARKING SPACES – OVER SEPTIC FIELD GAINED FROM PARKING LOT CONFIGURATION	43	

ACCESSIBLE PARKING SPACE REQUIREMENT PER ADA STANDARDS FOR ACCESSIBLE DESIGN, 28 CRF PART 36, SECTION 4.1.2 WHEN TOTAL PARKING IS BETWEEN 26–50 SPACES, REQUIRED MINIMUM NUMBER OF ACCESSIBLE SPACES IS 2.

TOTAL EXISTING HANDICAPPED PARKING IS 2.

NOTES:
LOCATION OF UNDERGROUND UTILITIES SHOWN HEREON ARE APPROXIMATE AND SHOULD BE VERIFIED IN THE FIELD BY THE APPROPRIATE UTILITY COMPANY PRIOR TO ANY CONSTRUCTION. THIS PLAN IS BASED ON AVAILABLE RECORD INFORMATION AND PLANS AND AN ACTUAL ON THE GROUND FIELD SURVEY BY THIS FIRM ON 06/19/2014 – 08/25/2014

No.	DATE	DESCRIPTION	BY
1			

REVISIONS

PROJ. MANAGER:	MBL
CHIEF DESIGNER:	MBL
REVIEWED BY:	DATE

SEAL

SEAL
COMMONWEALTH OF MASSACHUSETTS
JAMES E. MILLER
CIVIL
No. 31064
REGISTERED PROFESSIONAL ENGINEER

PREPARED FOR
HAARTZ CORPORATION
87 HAYWARD ROAD
ACTON MASSACHUSETTS

SCALE:
HORZ.: 1"=20'
VERT.:
DATUM:
HORZ.:
VERT.:
20 10 0 20
GRAPHIC SCALE

MBL
LAND DEVELOPMENT & PERMITTING, CORP.
LAND DEVELOPMENT, TRANSPORTATION AND ENVIRONMENTAL SOLUTIONS
480 TURNPIKE STREET
SOUTH EASTON, MA 02375
P.508.297.2746 F.508.297.2756
EMAIL:info@MBLLandDevelopment.com
WEB: www.MBLLandDevelopment.com

SITE DEVELOPMENT PLANS
LAYOUT AND MATERIAL PLAN
87 HAYWARD ROAD
ACTON MASSACHUSETTS

PROJ. No.: 2014-028
DATE: MAY 28, 2015

C-4.0

UCS: WRLD | MS VIEW: vp20 | LMAN: | CTB: MBL Standard
X:\2014\028\CIVIL\PLOT\2014-028 LM.dwg 5/28/2015 12:41:40 PM EDT

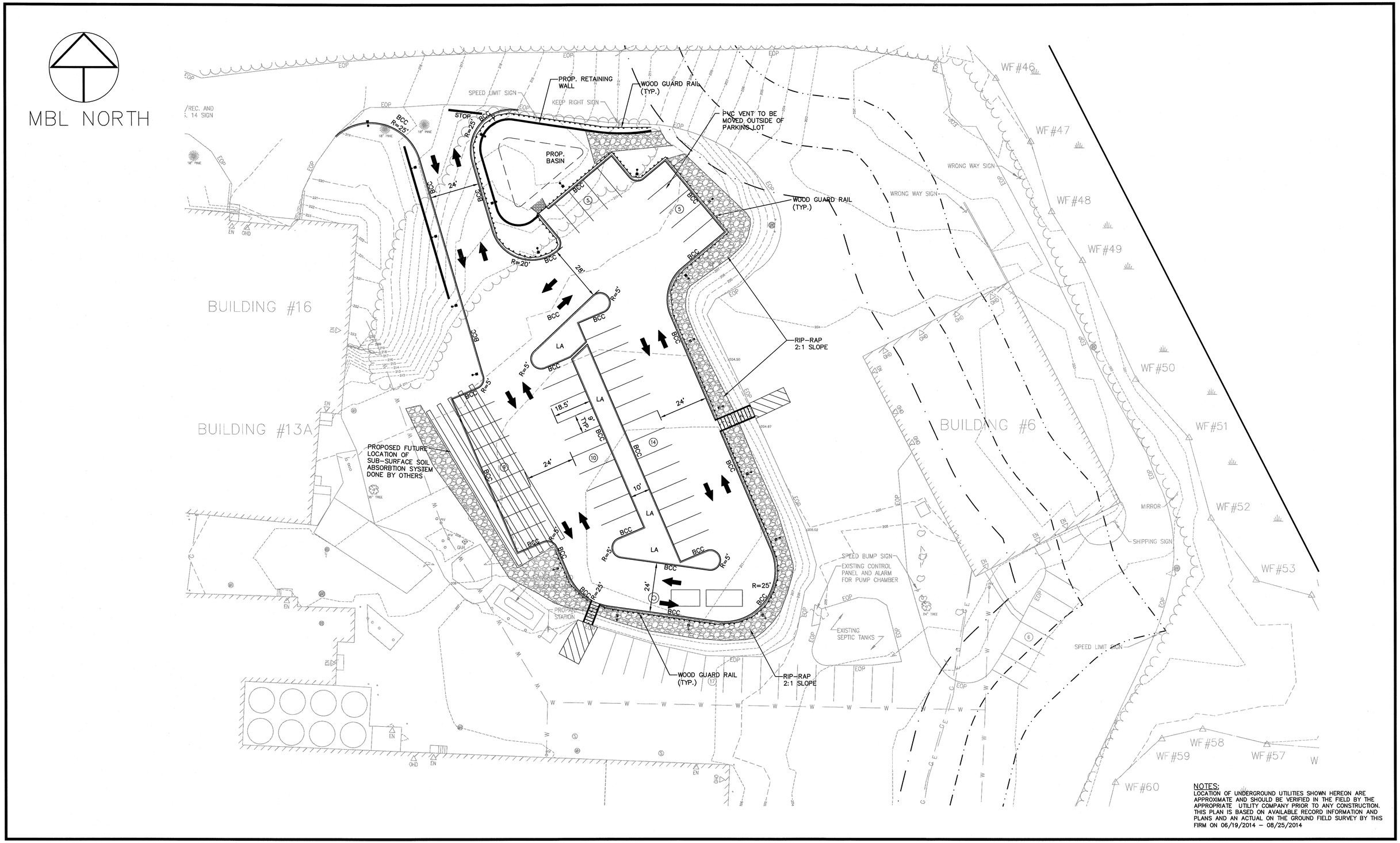

NOTES:
LOCATION OF UNDERGROUND UTILITIES SHOWN HEREON ARE APPROXIMATE AND SHOULD BE VERIFIED IN THE FIELD BY THE APPROPRIATE UTILITY COMPANY PRIOR TO ANY CONSTRUCTION. THIS PLAN IS BASED ON AVAILABLE RECORD INFORMATION AND PLANS AND AN ACTUAL ON THE GROUND FIELD SURVEY BY THIS FIRM ON 06/19/2014 – 08/25/2014

No.	DATE	DESCRIPTION	BY
1			

REVISIONS

PROJ. MANAGER: MBL
CHIEF DESIGNER: MBL
REVIEWED BY: DATE

SEAL

SEAL
COMMONWEALTH OF MASSACHUSETTS
JAMES E. MILLER
CIVIL
No. 31064
REGISTERED PROFESSIONAL ENGINEER

PREPARED FOR
HAARTZ CORPORATION
87 HAYWARD ROAD
ACTON MASSACHUSETTS

SCALE:
HORZ.: 1"=20'
VERT.:
DATUM:
HORZ.:
VERT.:
20 10 0 20
GRAPHIC SCALE

MBL
LAND DEVELOPMENT & PERMITTING, CORP.
LAND DEVELOPMENT, TRANSPORTATION AND ENVIRONMENTAL SOLUTIONS
480 TURNPIKE STREET
SOUTH EASTON, MA 02375
P.508.297.2746 F.508.297.2756
EMAIL:info@MBLLandDevelopment.com
WEB: www.MBLLandDevelopment.com

SITE DEVELOPMENT PLANS
LAYOUT AND MATERIAL PLAN
87 HAYWARD ROAD
ACTON MASSACHUSETTS

PROJ. No.: 2014-028
DATE: MAY 28, 2015
C-4.1

UCS: WRLD | MS VIEW: vp20 | LMAN: | CTB: MBL Standard
X:\2014\028\CIVIL\PLOT\2014-028 LM.dwg 5/27/2015 1:07:41 PM EDT

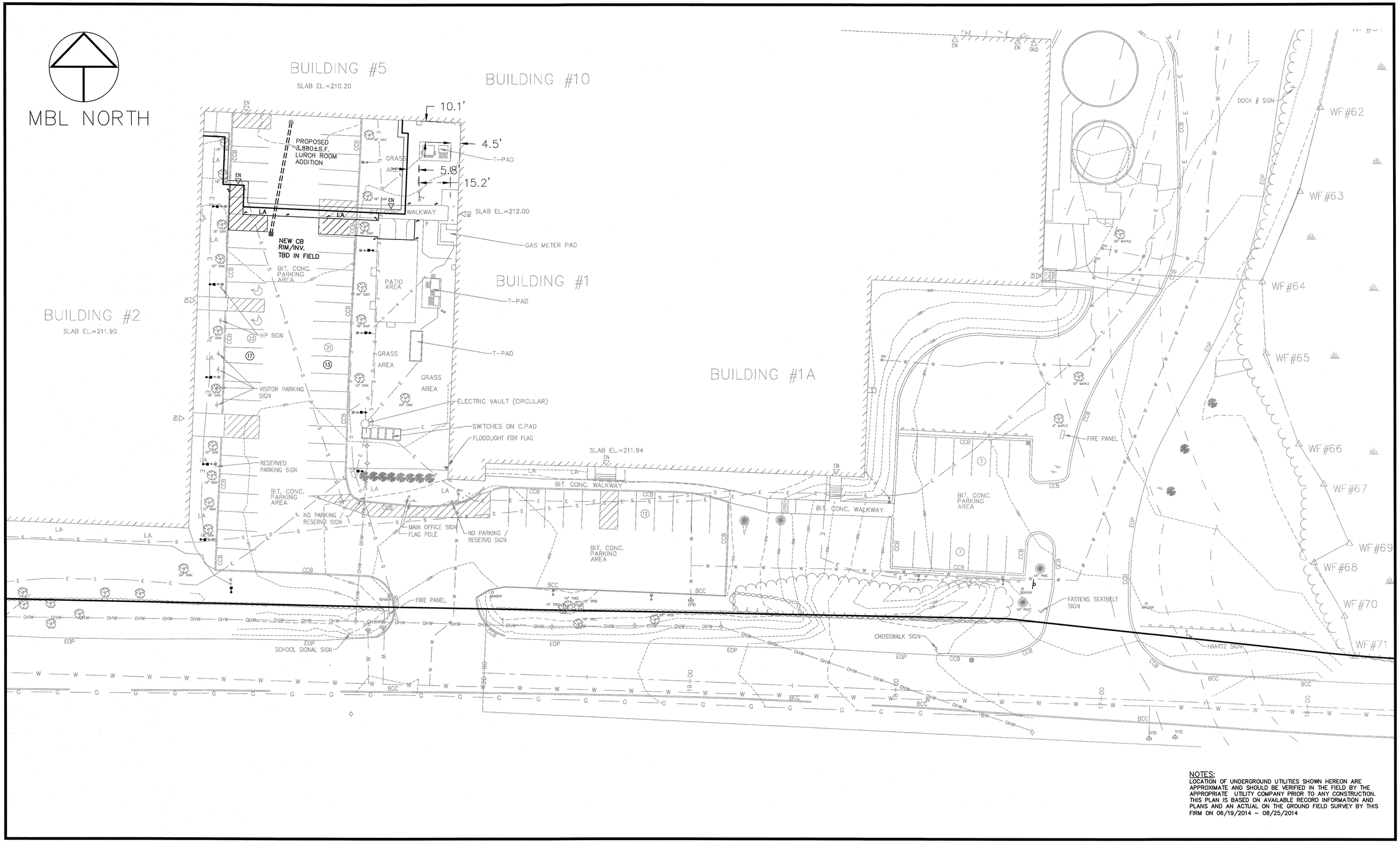

NOTES:
LOCATION OF UNDERGROUND UTILITIES SHOWN HEREON ARE APPROXIMATE AND SHOULD BE VERIFIED IN THE FIELD BY THE APPROPRIATE UTILITY COMPANY PRIOR TO ANY CONSTRUCTION. THIS PLAN IS BASED ON AVAILABLE RECORD INFORMATION AND PLANS AND AN ACTUAL ON THE GROUND FIELD SURVEY BY THIS FIRM ON 06/19/2014 – 08/25/2014

No.	DATE	DESCRIPTION	BY
1			

REVISIONS

PROJ. MANAGER:	MBL
CHIEF DESIGNER:	MBL
REVIEWED BY:	DATE

SEAL

SEAL COMMONWEALTH OF MASSACHUSETTS JAMES E. MILLER CIVIL No. 31064 PROFESSIONAL ENGINEER

PREPARED FOR
HAARTZ CORPORATION
87 HAYWARD ROAD
ACTON MASSACHUSETTS

SCALE:
HORZ.: 1"=20'
VERT.:
DATUM:
HORZ.:
VERT.:
20 10 0 20
GRAPHIC SCALE

MBL
LAND DEVELOPMENT & PERMITTING, CORP.
LAND DEVELOPMENT, TRANSPORTATION AND ENVIRONMENTAL SOLUTIONS
480 TURNPIKE STREET
SOUTH EASTON, MA 02375
P.508.297.2746 F.508.297.2756
EMAIL:info@MBLLandDevelopment.com
WEB: www.MBLLandDevelopment.com

SITE DEVELOPMENT PLANS
GRADING, DRAINAGE, UTILITY & EROSION CONTROL PLAN
87 HAYWARD ROAD
ACTON MASSACHUSETTS

PROJ. No.: 2014-028
DATE: MAY 28, 2015

C-5.0

UCS: WRLD | MS VIEW: vp20 | LMAN: | CTB: MBL Standard

X:\2014\028\CIVIL\PLOT\2014-028 GDU.dwg 5/28/2015 12:52:56 PM EDT

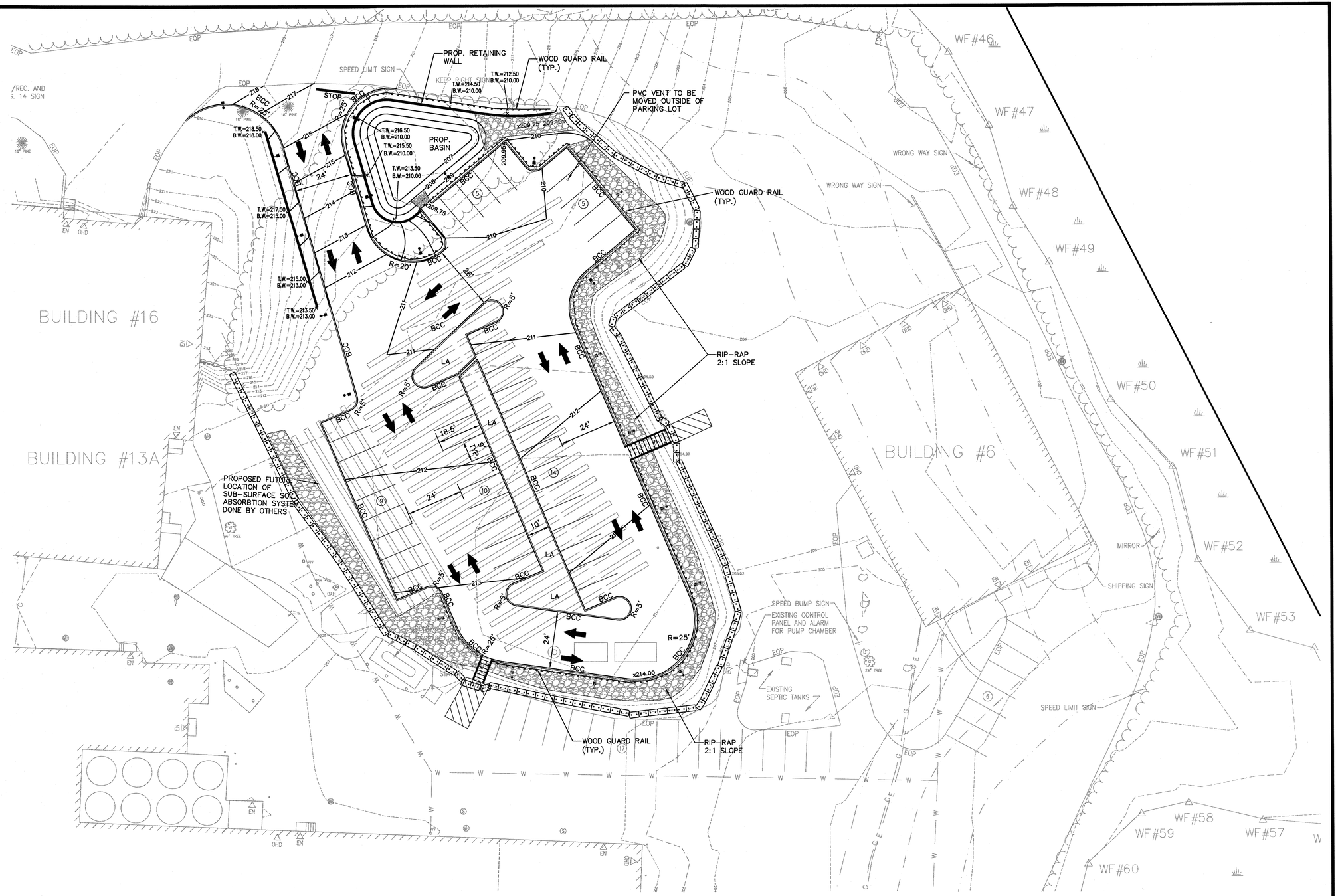

NOTES:
LOCATION OF UNDERGROUND UTILITIES SHOWN HEREON ARE APPROXIMATE AND SHOULD BE VERIFIED IN THE FIELD BY THE APPROPRIATE UTILITY COMPANY PRIOR TO ANY CONSTRUCTION. THIS PLAN IS BASED ON AVAILABLE RECORD INFORMATION AND PLANS AND AN ACTUAL ON THE GROUND FIELD SURVEY BY THIS FIRM ON 06/19/2014 – 08/25/2014

No.	DATE	DESCRIPTION	BY
1			

REVISIONS

PROJ. MANAGER:	MBL
CHIEF DESIGNER:	MBL
REVIEWED BY:	DATE

SEAL

SEAL
COMMONWEALTH OF MASSACHUSETTS
JAMES E. MILLER
CIVIL
No. 31064
REGISTERED PROFESSIONAL ENGINEER

PREPARED FOR
HAARTZ CORPORATION
87 HAYWARD ROAD
ACTON MASSACHUSETTS

SCALE:
HORZ.: 1"=20'
VERT.:
DATUM:
HORZ.:
VERT.:
20 10 0 20
GRAPHIC SCALE

MBL
LAND DEVELOPMENT & PERMITTING, CORP.
LAND DEVELOPMENT, TRANSPORTATION AND ENVIRONMENTAL SOLUTIONS
480 TURNPIKE STREET
SOUTH EASTON, MA 02375
P.508.297.2746 F.508.297.2756
EMAIL:info@MBLLandDevelopment.com
WEB: www.MBLLandDevelopment.com

SITE DEVELOPMENT PLANS
GRADING, DRAINAGE, UTILITY & EROSION CONTROL PLAN
87 HAYWARD ROAD
ACTON MASSACHUSETTS

PROJ. No.: 2014-028
DATE: MAY 28, 2015

C-5.1

UCS: WRLD | MS VIEW: vp20 | LMAN: | CTB: MBL Standard
X:\2014\028\CIVIL\PLOT\2014-028 GDU.dwg 5/28/2015 12:35:30 PM EDT

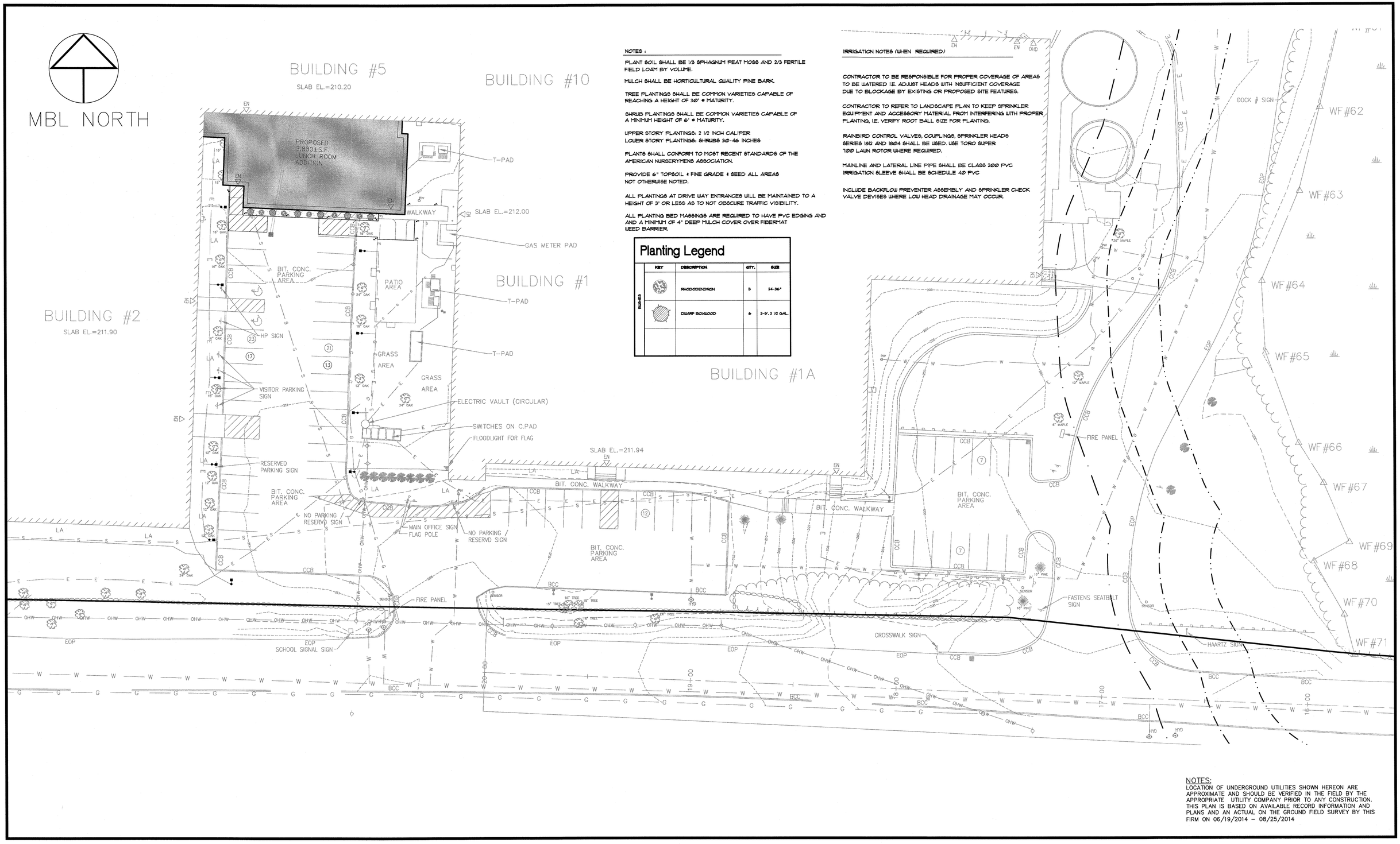

NOTES :

PLANT SOIL SHALL BE 1/3 SPHAGNUM PEAT MOSS AND 2/3 FERTILE FIELD LOAM BY VOLUME.

MULCH SHALL BE HORTICULTURAL QUALITY PINE BARK.

TREE PLANTINGS SHALL BE COMMON VARIETIES CAPABLE OF REACHING A HEIGHT OF 30' @ MATURITY.

SHRUB PLANTINGS SHALL BE COMMON VARIETIES CAPABLE OF A MINIMUM HEIGHT OF 6' @ MATURITY.

UPPER STORY PLANTINGS: 2 1/2 INCH CALIPER
LOWER STORY PLANTINGS: SHRUBS 30-46 INCHES

PLANTS SHALL CONFORM TO MOST RECENT STANDARDS OF THE AMERICAN NURSERYMENS ASSOCIATION.

PROVIDE 6" TOPSOIL & FINE GRADE & SEED ALL AREAS NOT OTHERWISE NOTED.

ALL PLANTINGS AT DRIVE WAY ENTRANCES WILL BE MAINTAINED TO A HEIGHT OF 3' OR LESS AS TO NOT OBSCURE TRAFFIC VISIBILITY.

ALL PLANTING BED MASSINGS ARE REQUIRED TO HAVE PVC EDGING AND AND A MINIMUM OF 4" DEEP MULCH COVER OVER FIBERMAT WEED BARRIER.

Planting Legend

	KEY	DESCRIPTION	QTY.	SIZE
BUSHES		RHODODENDRON	3	24-36"
		DWARF BOXWOOD	6	3-3', 2 1/2 GAL.

IRRIGATION NOTES (WHEN REQUIRED)

CONTRACTOR TO BE RESPONSIBLE FOR PROPER COVERAGE OF AREAS TO BE WATERED I.E. ADJUST HEADS WITH INSUFFICIENT COVERAGE DUE TO BLOCKAGE BY EXISTING OR PROPOSED SITE FEATURES.

CONTRACTOR TO REFER TO LANDSCAPE PLAN TO KEEP SPRINKLER EQUIPMENT AND ACCESSORY MATERIAL FROM INTERFERING WITH PROPER PLANTING, I.E. VERIFY ROOT BALL SIZE FOR PLANTING.

RAINBIRD CONTROL VALVES, COUPLINGS, SPRINKLER HEADS SERIES 1812 AND 1804 SHALL BE USED. USE TORO SUPER 700 LAWN ROTOR WHERE REQUIRED.

MAINLINE AND LATERAL LINE PIPE SHALL BE CLASS 200 PVC IRRIGATION SLEEVE SHALL BE SCHEDULE 40 PVC

INCLUDE BACKFLOW PREVENTER ASSEMBLY AND SPRINKLER CHECK VALVE DEVISES WHERE LOW HEAD DRAINAGE MAY OCCUR.

NOTES:
LOCATION OF UNDERGROUND UTILITIES SHOWN HEREON ARE APPROXIMATE AND SHOULD BE VERIFIED IN THE FIELD BY THE APPROPRIATE UTILITY COMPANY PRIOR TO ANY CONSTRUCTION. THIS PLAN IS BASED ON AVAILABLE RECORD INFORMATION AND PLANS AND AN ACTUAL ON THE GROUND FIELD SURVEY BY THIS FIRM ON 06/19/2014 – 08/25/2014

No.	DATE	DESCRIPTION	BY
1			

REVISIONS

PROJ. MANAGER:	MBL
CHIEF DESIGNER:	MBL
REVIEWED BY:	DATE

SEAL

SEAL: COMMONWEALTH OF MASSACHUSETTS — JAMES E. MILLER — CIVIL — No. 31064 — REGISTERED PROFESSIONAL ENGINEER

PREPARED FOR

HAARTZ CORPORATION
87 HAYWARD ROAD

ACTON MASSACHUSETTS

SCALE:
HORZ.: 1"=20'
VERT.:
DATUM:
HORZ.:
VERT.:
20 10 0 20
GRAPHIC SCALE

MBL
LAND DEVELOPMENT & PERMITTING, CORP.
LAND DEVELOPMENT, TRANSPORTATION AND ENVIRONMENTAL SOLUTIONS
480 TURNPIKE STREET
SOUTH EASTON, MA 02375
P.508.297.2746 F.508.297.2756
EMAIL:info@MBLLandDevelopment.com
WEB: www.MBLLandDevelopment.com

SITE DEVELOPMENT PLANS
LANDSCAPE PLAN
87 HAYWARD ROAD

ACTON MASSACHUSETTS

PROJ. No.: 2014-028
DATE: MAY 28, 2015

C-6.0

UCS: WRLD | MS VIEW: vp20 | LMAN: | CTB: MBL Standard

X:\2014\028\CIVIL\PLOT\2014-028 LA.dwg 5/27/2015 12:40:20 PM EDT

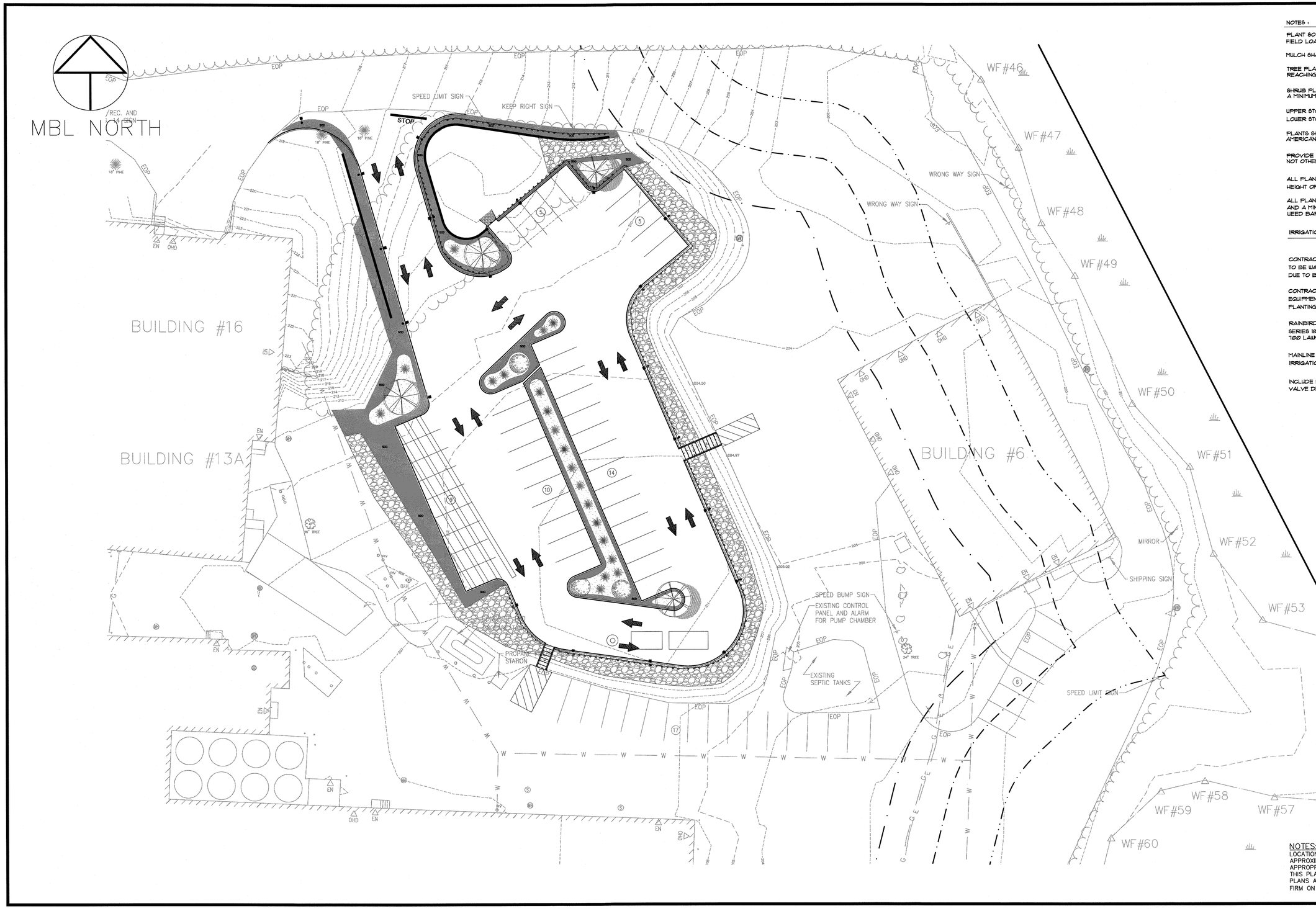

NOTES :

PLANT SOIL SHALL BE 1/3 SPHAGNUM PEAT MOSS AND 2/3 FERTILE FIELD LOAM BY VOLUME.

MULCH SHALL BE HORTICULTURAL QUALITY PINE BARK.

TREE PLANTINGS SHALL BE COMMON VARIETIES CAPABLE OF REACHING A HEIGHT OF 30' @ MATURITY.

SHRUB PLANTINGS SHALL BE COMMON VARIETIES CAPABLE OF A MINIMUM HEIGHT OF 6' @ MATURITY.

UPPER STORY PLANTINGS: 2 1/2 INCH CALIPER
LOWER STORY PLANTINGS: SHRUBS 30-46 INCHES

PLANTS SHALL CONFORM TO MOST RECENT STANDARDS OF THE AMERICAN NURSERYMENS ASSOCIATION.

PROVIDE 6" TOPSOIL & FINE GRADE & SEED ALL AREAS NOT OTHERWISE NOTED.

ALL PLANTINGS AT DRIVE WAY ENTRANCES WILL BE MAINTAINED TO A HEIGHT OF 3' OR LESS AS TO NOT OBSCURE TRAFFIC VISIBILITY.

ALL PLANTING BED MASSINGS ARE REQUIRED TO HAVE PVC EDGING AND AND A MINIMUM OF 4" DEEP MULCH COVER OVER FIBERMAT WEED BARRIER.

IRRIGATION NOTES (WHEN REQUIRED)

CONTRACTOR TO BE RESPONSIBLE FOR PROPER COVERAGE OF AREAS TO BE WATERED I.E. ADJUST HEADS WITH INSUFFICIENT COVERAGE DUE TO BLOCKAGE BY EXISTING OR PROPOSED SITE FEATURES.

CONTRACTOR TO REFER TO LANDSCAPE PLAN TO KEEP SPRINKLER EQUIPMENT AND ACCESSORY MATERIAL FROM INTERFERING WITH PROPER PLANTING, I.E. VERIFY ROOT BALL SIZE FOR PLANTING.

RAINBIRD CONTROL VALVES, COUPLINGS, SPRINKLER HEADS SERIES 1812 AND 1804 SHALL BE USED. USE TORO SUPER 1200 LAWN ROTOR WHERE REQUIRED.

MAINLINE AND LATERAL LINE PIPE SHALL BE CLASS 200 PVC
IRRIGATION SLEEVE SHALL BE SCHEDULE 40 PVC

INCLUDE BACKFLOW PREVENTER ASSEMBLY AND SPRINKLER CHECK VALVE DEVISES WHERE LOW HEAD DRAINAGE MAY OCCUR.

Planting Legend

	KEY	DESCRIPTION	QTY.	SIZE
TREES		SHADE TREE/ RED MAPLE	4	4-6', 2-½" CAL
SHRUBS		ORNAMENTAL GRASS	20	4-6', 2-½" CAL
		BURNING BUSH	3	4-6', 2-½" CAL

NOTES:
LOCATION OF UNDERGROUND UTILITIES SHOWN HEREON ARE APPROXIMATE AND SHOULD BE VERIFIED IN THE FIELD BY THE APPROPRIATE UTILITY COMPANY PRIOR TO ANY CONSTRUCTION. THIS PLAN IS BASED ON AVAILABLE RECORD INFORMATION AND PLANS AND AN ACTUAL ON THE GROUND FIELD SURVEY BY THIS FIRM ON 06/19/2014 – 08/25/2014

No.	DATE	DESCRIPTION	BY
1			

REVISIONS

PROJ. MANAGER:	MBL
CHIEF DESIGNER:	MBL
REVIEWED BY:	DATE

SEAL

SEAL
COMMONWEALTH OF MASSACHUSETTS
JAMES E. MILLER
CIVIL
No. 31064
PROFESSIONAL ENGINEER

PREPARED FOR
HAARTZ CORPORATION
87 HAYWARD ROAD
ACTON MASSACHUSETTS

SCALE:
HORZ.: 1"=20'
VERT.:
DATUM:
HORZ.:
VERT.:
20 10 0 20
GRAPHIC SCALE

MBL
LAND DEVELOPMENT & PERMITTING, CORP.
LAND DEVELOPMENT, TRANSPORTATION AND ENVIRONMENTAL SOLUTIONS
480 TURNPIKE STREET
SOUTH EASTON, MA 02375
P.508.297.2746 F.508.297.2756
EMAIL:info@MBLLandDevelopment.com
WEB: www.MBLLandDevelopment.com

SITE DEVELOPMENT PLANS
LANDSCAPE PLAN
87 HAYWARD ROAD
ACTON MASSACHUSETTS

PROJ. No.: 2014-028
DATE: MAY 28, 2015

C-6.1

UCS: WRLD | MS VIEW: vp20 | LMAN: | CTB: MBL Standard
X:\2014\028\CIVIL\PLOT\2014-028 LA.dwg 5/27/2015 12:40:20 PM EDT

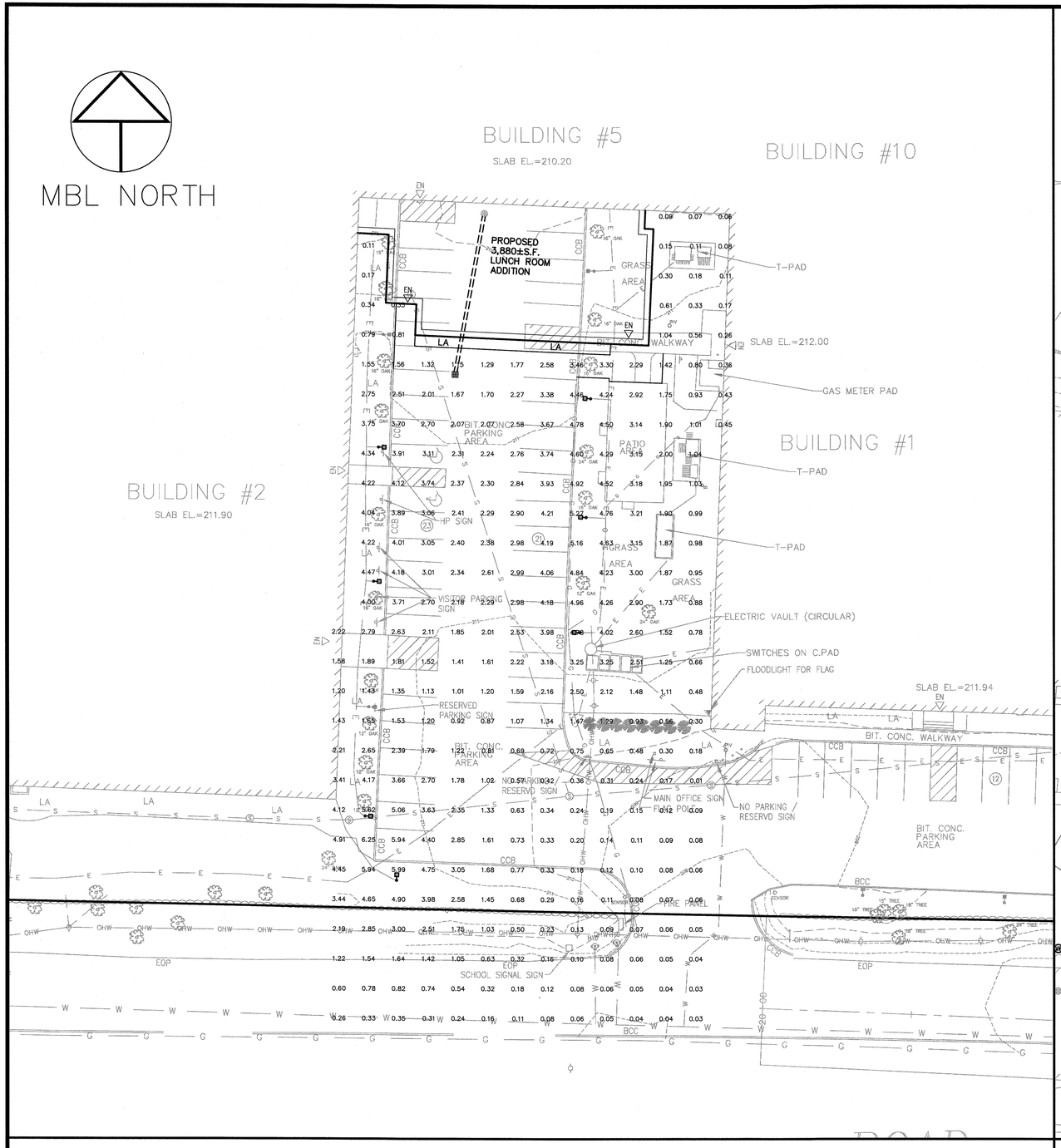

FRONT PARKING – PLAN VIEW

SCALE: 1" = 20'

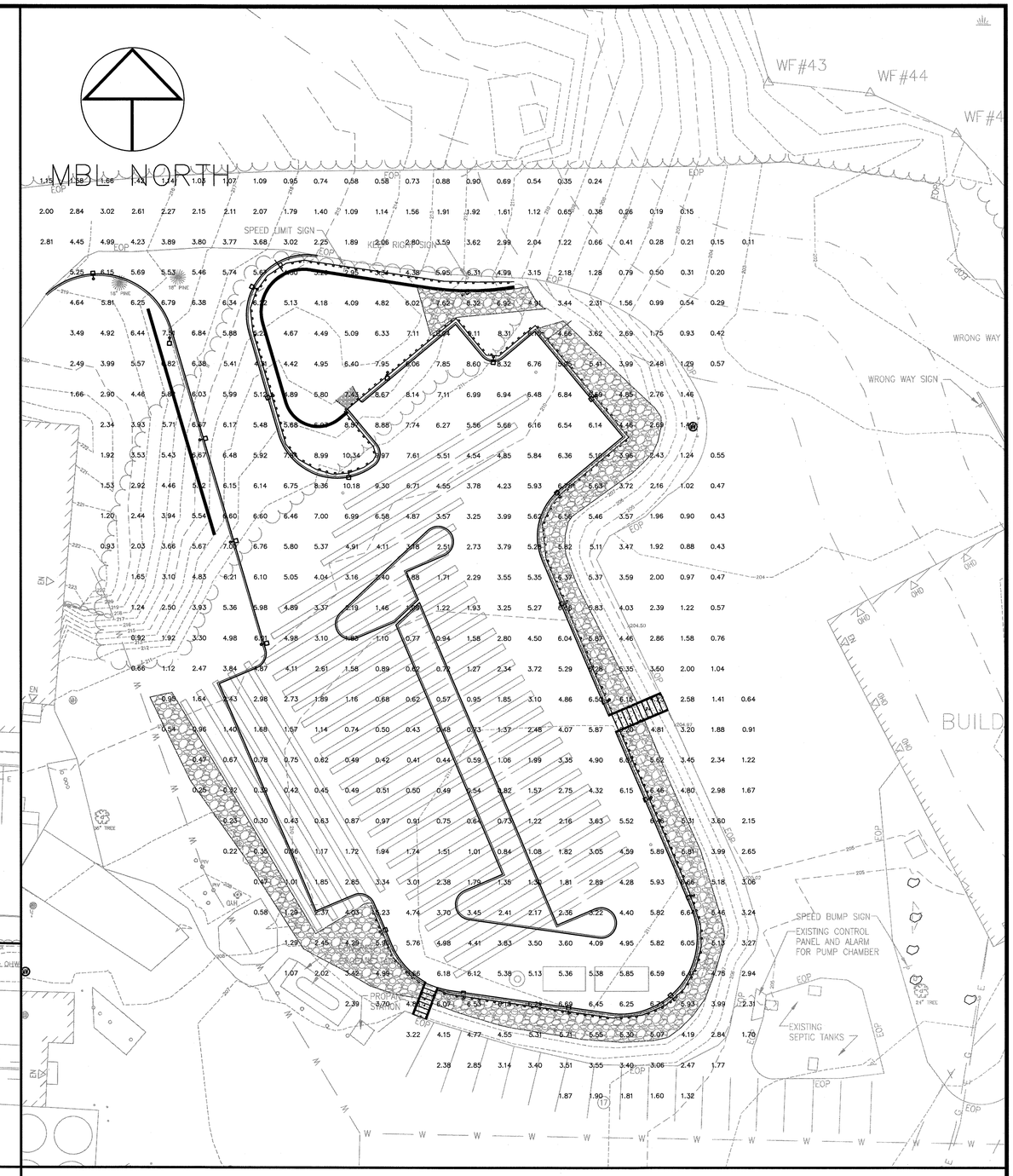

REAR PARKING AREA – PLAN VIEW

SCALE: 1" = 20'

No.	DATE	DESCRIPTION	BY
1			

REVISIONS

PROJ. MANAGER:	MBL
CHIEF DESIGNER:	MBL
REVIEWED BY:	DATE

SEAL

SEAL

COMMONWEALTH OF MASSACHUSETTS
JAMES E. MILLER
CIVIL
No. 31064
PROFESSIONAL ENGINEER

PREPARED FOR

HAARTZ CORPORATION
87 HAYWARD ROAD

ACTON MASSACHUSETTS

SCALE:
HORZ.: AS SHOWN
VERT.:
DATUM:
HORZ.:
VERT.:
0
GRAPHIC SCALE

MBL

LAND DEVELOPMENT & PERMITTING, CORP.
LAND DEVELOPMENT, TRANSPORTATION AND ENVIRONMENTAL SOLUTIONS
480 TURNPIKE STREET
SOUTH EASTON, MA 02375
P.508.297.2746 F.508.297.2756
EMAIL:info@MBLLandDevelopment.com
WEB: www.MBLLandDevelopment.com

SITE DEVELOPMENT PLANS

SITE LIGHTING PLAN

87 HAYWARD ROAD

ACTON MASSACHUSETTS

PROJ. No.: 2014-028
DATE: MAY 28, 2015

C-7.0

UCS: WRLD MS VIEW: vp20 LMAN: CTB: MBL Standard
X:\2014\028\lighting\2014-028SITELIGHTING.dwg 5/27/2015 1:05:44 PM EDT

SEC-EDG-2M/2MB-WM

Cree Edge™ Security Wall Pack Luminaire – Type II Medium – Wall Mount

Product Description

Slim, low profile design. Luminaire end cap is rugged die cast aluminum with integral, weathertight LED driver compartments and high performance aluminum heat sinks specifically designed for LED applications. Housing is rugged aluminum. Furnished with low copper lightweight mounting box designed for installation over standard and mud ring single gang J-Boxes. Secures to wall with four 3/16" (5mm) screws (by others). Conduit entry from top, bottom, sides and rear. Allows mounting for uplight or downlight. Designed and approved for easy through-wiring. Includes leaf / debris guard.

Performance Summary

Utilizes BetaLED® Technology

Patented NanoOptic® Product Technology

Made in the U.S.A. of U.S. and imported parts

CRI: Minimum 70 CRI

CCT: 5700K (+/- 500K) Standard, 4000K (+/- 300K)

Limited Warranty[1]: 10 years on luminaire / 10 years on Colorfast DeltaGuard® finish

Accessories

Field-Installed Accessories
XA-BRDSPK Bird Spikes

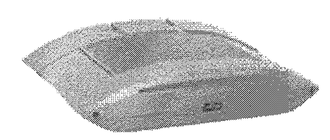

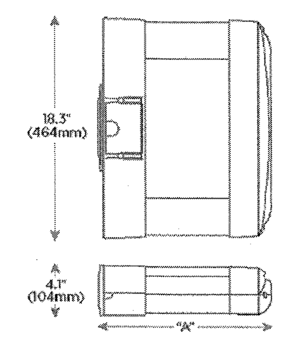

LED Count (x10)	Dim. "A"
02	9.9" (251mm)
04	11.9" (303mm)
06	13.9" (353mm)
08	15.9" (404mm)
10	17.9" (455mm)
12	19.9" (505mm)

Ordering Information

Example: SEC-EDG-2M-WM-02-E-UL-SV-350-OPTIONS

SEC-EDG		WM		E				
Product	Optic	Mounting	LED Count (x10)	Series	Voltage	Color Options	Drive Current	Options
SEC-EDG	2M Type II Medium 2MB Type II Medium w/BLS	WM Wall	02 04 06 08 10 12	E	UL Universal 120-277V UH Universal 347-480V 34 347V	SV Silver (Standard) BK Black BZ Bronze PB Platinum Bronze WH White	350 350mA 525* 525mA 700** 700mA	40K 4000K Color Temperature - Color temperature per luminaire DIM 0-10V Dimming - Control by others - Refer to dimming spec sheet for details - Can't exceed specified drive current F Fuse - Not available with UH or 34 voltages - Not available with all ML options. Refer to ML spec sheet for availability with ML options P Photocell - Not available with all ML options. Refer to ML spec sheet for availability with ML options - Must specify voltage other than UH ML Multi-Level - Refer to ML spec sheet for details

[1] See www.cree.com/lighting/products/warranty for warranty terms
* Available on luminaires with 20-80 LEDs
** Available on luminaires with 20-60 LEDs

BetaLED® TECHNOLOGY

Rev. Date: 12/20/13

CREE

www.cree.com/lighting T (800) 236-6800 F (262) 504-5415

Product Specifications

CONSTRUCTION & MATERIALS

- Slim, low profile design
- Luminaire sides are rugged die cast aluminum with integral, weathertight LED driver compartments and high performance aluminum heat sinks specifically designed for LED applications
- Housing is rugged aluminum
- Furnished with low copper, light weight mounting box designed for installation over standard and mud ring single gang J-Boxes
- Luminaire can also be direct mounted to a wall and surface wired
- Secures to wall with four 3/16" (5mm) screws (by others)
- Conduit entry from top, bottom, sides, and rear
- Allows mounting for uplight or downlight
- Designed and approved for easy through-wiring
- Includes leaf / debris guard
- Exclusive Colorfast DeltaGuard® finish features an E-Coat epoxy primer with an ultra-durable powder topcoat, providing excellent resistance to corrosion, ultraviolet degradation and abrasion. Standard is silver. Bronze, black, white, and platinum bronze are also available

ELECTRICAL SYSTEM

- **Input Voltage:** 120-277V or 347-480V, 50/60Hz, Class 1 drivers
- **Power Factor:** > 0.9 at full load
- **Total Harmonic Distortion:** < 20% at full load
- Integral weathertight J-Box with leads (wire nuts) for easy power hook up
- Integral 10kV surge suppression protection standard
- To address inrush current, slow blow fuse or type C / D breaker should be used

REGULATORY & VOLUNTARY QUALIFICATIONS

- cULus Listed
- Suitable for wet locations
- Enclosure rated IP66 per IEC 60529 when ordered without P or ML options
- Consult factory for CE Certified products
- 10KV surge suppression protection tested in accordance with IEEE / ANSI C62.41.2
- Luminaire and finish endurance tested to withstand 5,000 hours of elevated ambient salt fog conditions as defined in ASTM Standard B 117
- Product qualified on the DesignLights Consortium™ ("DLC") Qualified Products List ("QPL") when ordered without full backlight control shield
- Dark Sky Friendly, IDA Approved
- Meets Buy American requirements within ARRA

Photometry

All published luminaire photometric testing performed to IESNA LM-79-08 standards by a NVLAP certified laboratory

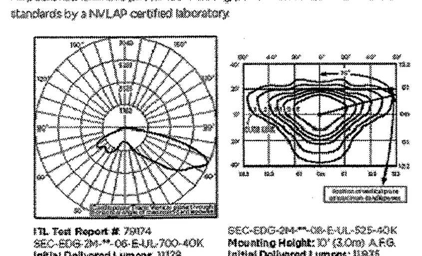

ITL Test Report #: 79174
SEC-EDG-2M-**-06-E-UL-700-40K
Initial Delivered Lumens: 11,128

SEC-EDG-2M-**-08-E-UL-525-40K
Mounting Height: 10' (3.0m) A.F.G.
Initial Delivered Lumens: 11,835
Initial FC at grade

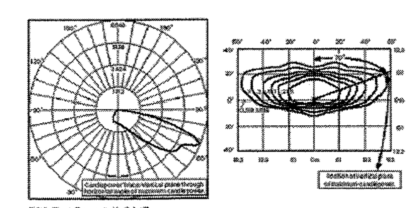

CSA Test Report #: 6447
ARE-EDG-2MB-**-06-E-UL-700-40K
Initial Delivered Lumens: 7,953

SEC-EDG-2MB-**-08-E-UL-525-40K
Mounting Height: 10' (3.0m) A.F.G.
Initial Delivered Lumens: 8,915
Initial FC at grade

IES Files
To obtain an IES file specific to your project consult:
http://www.cree.com/lighting/tools-and-support/exterior-ies-configuration-tool

Weight

LED Count (x10)	Weight
02	20 lbs (9.1kg)
04	22 lbs (10.0kg)
06	25 lbs (11.3kg)
08	27 lbs (12.2kg)
10	31 lbs (14.1kg)
12	32 lbs (14.5kg)

Lumen Output, Electrical, and Lumen Maintenance Data

Type II Medium and Type II Medium Distribution w/ BLS

LED Count (x10)	5700K Initial Delivered Lumens*	5700K BUG Ratings** Per TM-15-11	5700K Initial Delivered Lumens w/BLS*	5700K BUG Ratings** Per TM-15-11	4000K Initial Delivered Lumens*	4000K BUG Ratings** Per TM-15-11	4000K Initial Delivered Lumens w/BLS*	4000K BUG Ratings** Per TM-15-11	System Watts 120-480V	Total Current 120V	208V	240V	277V	347V	480V	50K Hours Projected Lumen Maintenance Factor @ 15°C (59°F)***
350mA @ 25°C (77°F)																
02	2,220	B1 U0 G1	1,622	B0 U0 G1	2,138	B1 U0 G1	1,610	B0 U0 G1	25	0.21	0.13	0.11	0.10	0.08	0.07	93%
04	4,440	[illegible]	[illegible]	[illegible]	4,276	B1 U0 G1	3,221	[illegible]	46	[illegible]	[illegible]	[illegible]	[illegible]	[illegible]	[illegible]	
06	6,584	B2 U0 G2	4,959	B1 U0 G1	6,340	B2 U0 G1	4,776	B1 U0 G1	66	0.52	0.31	0.28	0.26	0.20	0.15	
08	8,779	[illegible]	6,613	[illegible]	8,454	B2 U0 G2	6,368	[illegible]	90	[illegible]	0.44	[illegible]	[illegible]	[illegible]	0.20	
10	10,947	B2 U0 G2	8,246	B1 U0 G2	10,542	B2 U0 G2	7,941	B1 U0 G2	110	0.92	0.53	0.47	0.41	0.32	0.24	
12	13,137	B2 U0 G3	9,896	B1 U0 G2	12,650	B2 U0 G2	9,529	[illegible]	[illegible]	[illegible]	0.63	[illegible]	[illegible]	[illegible]	0.29	
525mA @ 25°C (77°F)																
02	3,108	B1 U0 G1	2,341	B0 U0 G1	2,995	B1 U0 G1	2,254	B0 U0 G1	37	0.30	0.19	0.17	0.16	0.12	0.10	92%
04	6,216	B2 U0 G1	4,682	B1 U0 G1	5,985	B2 U0 G1	4,507	[illegible]	[illegible]	[illegible]	0.34	[illegible]	[illegible]	0.21	0.16	
06	9,218	B2 U0 G2	6,945	B1 U0 G2	8,876	B2 U0 G2	6,686	B1 U0 G2	101	0.84	0.49	0.43	0.38	0.30	0.22	
08	12,290	B2 U0 G2	9,258	B1 U0 G2	11,835	B2 U0 G2	8,915	[illegible]	[illegible]	[illegible]	0.64	[illegible]	0.51	0.39	0.29	
700mA @ 25°C (77°F)																
02	3,796	B1 U0 G1	2,860	B0 U0 G1	3,656	B1 U0 G1	2,754	B0 U0 G1	50	0.41	0.25	0.22	0.20	0.15	0.12	90%
04	7,591	B2 U0 G2	5,719	B1 U0 G1	7,311	B2 U0 G2	5,507	B1 U0 G1	[illegible]	[illegible]	0.46	0.40	0.36	0.27	[illegible]	
06	11,259	B2 U0 G2	8,481	B1 U0 G2	10,842	B2 U0 G2	8,167	B1 U0 G2	134	1.14	0.65	0.57	0.50	0.39	0.29	

* Actual production yield may vary between -4 and +10% of initial delivered lumens
** For more information on the IES BUG (Backlight-Uplight-Glare) Rating visit www.ies.org/PDF/Erratas/TM-15-11BugRatingsAddendum.pdf
*** For recommended lumen maintenance factor data see TD-13. Calculated L_{70} based on 6,000 hours LM-80-08 testing >100,000 hours

© 2013 Cree, Inc. All rights reserved. For informational purposes only. Content is subject to change. See www.cree.com/patents for patents that cover these products. Cree®, the Cree logo, BetaLED®, NanoOptic®, the BetaLED Technology logo, and Colorfast DeltaGuard® are registered trademarks, and Cree Edge™ is a trademark of Cree, Inc. The UL logo is a registered trademark of UL LLC. DesignLights Consortium™ and the DLC QPL logo are trademarks of Northeast Energy Efficiency Partnerships, Inc.

www.cree.com/lighting T (800) 236-6800 F (262) 504-5415

CREE

OSQ Series

LED Area/Flood Luminaire – Large

Product Description

The OSQ™ Area/Flood luminaire blends extreme optical control, advanced thermal management and modern, clean aesthetics. Built to last, the housing is rugged cast aluminum with an integral, weathertight LED driver compartment. Versatile mounting configurations offer simple installation. Its slim, low-profile design minimizes wind load requirements and blends seamlessly into the site providing even, quality illumination. 'S' Input power designator is a suitable upgrade for HID applications up to 750 Watts

Applications: Parking lots, walkways, campuses, auto dealerships, office complexes, and internal roadways.

Performance Summary

Utilizes BetaLED® Technology

NanoOptic® Precision Delivery Grid™ optic

Made in the U.S.A. of U.S. and imported parts

CRI: Minimum 70 CRI (4000K & 5700K); 80 CRI (3000K)

CCT: 3000K (+/- 300K), 4000K (+/- 300K), 5700K (+/- 500K)

Limited Warranty[1]: 10 years on luminaire/10 years on Colorfast DeltaGuard® finish

Accessories

Field-Installed	
Backlight Shield OSQ-BLSLF – Front facing optics	OSQ-BLSLR – Rotated optics

DA Mount

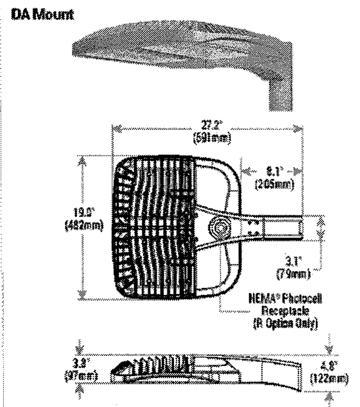

AA Mount

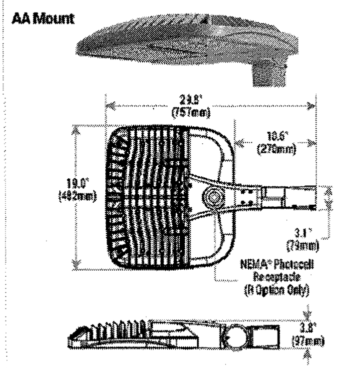

Ordering Information

Fully assembled luminaire is composed of two components that must be ordered separately:
Example: **Mount:** OSQ-AA SV + **Luminaire:** OSQ A NM 2ME S 40K-UL SV

Mount (Luminaire must be ordered separately)	
OSQ-	
OSQ-AA Adjustable Arm OSQ-DA Direct Arm	Color Options: SV Silver, BK Black, BZ Bronze, PB Platinum Bronze, WH White

Luminaire (Mount must be ordered separately)

OSQ	A	NM		S					
Product	Version	Mounting	Optic	Input Power Designator	CCT	–	Voltage	Color Options	Options
OSQ	A	NM No Mount	2ME* Type II Medium 3ME* Type III Medium 4ME* Type IV Medium 5ME Type V Medium 5SH Type V Short 15D 15° Flood 25D 25° Flood 40D 40° Flood 60D 60° Flood	S 223W	30K 3000K 40K 4000K 57K 5700K	– US * Canada	UL Universal 120-277V UH Universal 347-480V	SV Silver BK Black BZ Bronze PB Platinum Bronze WH White	DIM 0-10V Dimming - Control by others - Refer to Dimming spec sheet for details - Can't exceed wattage of specified input power designator F Fuse - When code dictates fusing, use time delay fuse ML Multi-Level - Refer to ML spec sheet for details - High: 100%, Low: 30% - Intended for downlight applications at 0° tilt Q9 Field Adjustable Output - Refer to Field Adjustable Output spec sheet for details R NEMA® Photocell Receptacle - Intended for downlight applications with maximum 45° tilt - Photocell by others RL Rotate Left - LED and optic are rotated to the left RR Rotate Right - LED and optic are rotated to the right

[1] See www.cree.com/lighting/products/warranty for warranty terms
* Available with Backlight Shield when ordered with field-installed accessory (see table above)

BetaLED® TECHNOLOGY

Rev. Date: V3 08/22/2014

CREE

US: www.cree.com/lighting T (800) 236-6800 F (262) 504-5415 Canada: www.cree.com/canada T (800) 473-1234 F (800) 890-7507

Product Specifications

CONSTRUCTION & MATERIALS

- Slim, low profile design minimizes wind load requirements
- Luminaire housing is rugged die cast aluminum with an integral, weathertight LED driver compartment and high performance heat sink
- Convenient interlocking mounting method on direct arm mount. Mounting adapter is rugged die cast aluminum and mounts to 3-6" (76-152mm) square or round pole, secured by two 5/16-18 UNC bolts spaced on 2" (51mm) centers
- Mounting for the adjustable arm mount adapter is rugged die cast aluminum and mounts to 2" (51mm) IP, 2.375" (60mm) O.D. tenon
- Adjustable arm mount can be adjusted 180° in 2.5° increments
- Designed for uplight and downlight applications
- Exclusive Colorfast DeltaGuard® finish features an E-Coat epoxy primer with an ultra-durable powder topcoat, providing excellent resistance to corrosion, ultraviolet degradation and abrasion. Silver, bronze, black, white, and platinum bronze are available
- **Weight:** 28.5 lbs. (13kg)

ELECTRICAL SYSTEM

- **Input Voltage:** 120-277V or 347-480V, 50/60Hz, Class 1 drivers
- **Power Factor:** > 0.9 at full load
- **Total Harmonic Distortion:** < 20% at full load
- Integral 10kV surge suppression protection standard
- To address inrush current, slow blow fuse or type C/D breaker should be used

REGULATORY & VOLUNTARY QUALIFICATIONS

- cULus Listed
- Suitable for wet locations
- Enclosure rated IP66 per IEC 60529 when ordered without R option
- Consult factory for CE Certified products
- Pending certification to ANSI C136.31-2001, 3G bridge and overpass vibration standards
- 10kV surge suppression protection tested in accordance with IEEE/ANSI C62.41.2
- Luminaire and finish endurance tested to withstand 5,000 hours of elevated ambient salt fog conditions as defined in ASTM Standard B 117
- Meets Buy American requirements within ARRA
- DLC qualified when ordered with 30K (5ME, 5SH optics), 40K (2ME, 3ME, 4ME, 5ME, 5SH optics), or 57K (2ME, 3ME, 4ME, 5ME, 5SH optics). Please refer to http://www.designlights.org/QPL for most current information

Electrical Data*							
Input Power Designator	System Watts 120-480V	Total Current 120V	208V	240V	277V	347V	480V
S	223	1.94	1.13	0.99	0.85	0.65	0.47

* Electrical data at 25°C (77°F)

Recommended Cree® Outdoor Luminaire Lumen Maintenance Factors (LMF)[1]						
Ambient	Input Power Designator	Initial LMF	25K hr Projected[2] LMF	50K hr Projected[2] LMF	75K hr Calculated[3] LMF	100K hr Calculated[3] LMF
5°C (41°F)	S	1.04	0.99	0.94	0.88	0.84
10°C (50°F)	S	1.03	0.98	0.93	0.88	0.83
15°C (59°F)	S	1.02	0.97	0.92	0.87	0.83
20°C (68°F)	S	1.01	0.96	0.91	0.86	0.82
25°C (77°F)	S	1.00	0.95	0.90	0.85	0.81

[1] Lumen maintenance values at 25°C (77°F) are calculated per TM-21 based on LM-80 data and in-situ luminaire testing
[2] In accordance with IESNA TM-21-11, Projected Values represent interpolated value based on time durations that are within six times (6X) the IESNA LM-80-08 total test duration (in hours) for the device under testing ((DUT) i.e. the packaged LED chip)
[3] In accordance with IESNA TM-21-11, Calculated Values represent time durations that exceed six times (6X) the IESNA LM-80-08 total test duration (in hours) for the device under testing ((DUT) i.e. the packaged LED chip)

CREE

US: www.cree.com/lighting T (800) 236-6800 F (262) 504-5415 Canada: www.cree.com/canada T (800) 473-1234 F (800) 890-7507

				PROJ. MANAGER:	MBL
				CHIEF DESIGNER:	MBL
				REVIEWED BY:	DATE
1					
No.	DATE	DESCRIPTION	BY		
REVISIONS					

SEAL

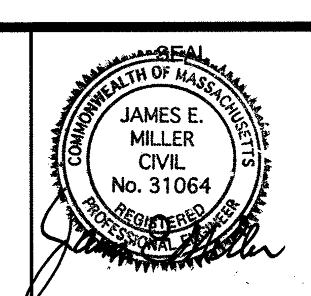

PREPARED FOR

HAARTZ CORPORATION
87 HAYWARD ROAD

ACTON MASSACHUSETTS

SCALE:
HORZ.: AS SHOWN
VERT.:
DATUM:
HORZ.:
VERT.:
0
GRAPHIC SCALE

MBL
LAND DEVELOPMENT & PERMITTING, CORP.
LAND DEVELOPMENT, TRANSPORTATION AND ENVIRONMENTAL SOLUTIONS
480 TURNPIKE STREET
SOUTH EASTON, MA 02375
P.508.297.2746 F.508.297.2756
EMAIL:info@MBLLandDevelopment.com
WEB: www.MBLLandDevelopment.com

SITE DEVELOPMENT PLANS

SITE LIGHTING DETAILS

87 HAYWARD ROAD

ACTON MASSACHUSETTS

PROJ. No.: 2014-028
DATE: MAY 28, 2015

C-7.1

UCS: WRLD MS VIEW: vp20 LMAN: CTB: MBL Standard

X:\2014\028\lighting\2014-028SITELIGHTING.dwg 5/27/2015 12:59:38 PM EDT

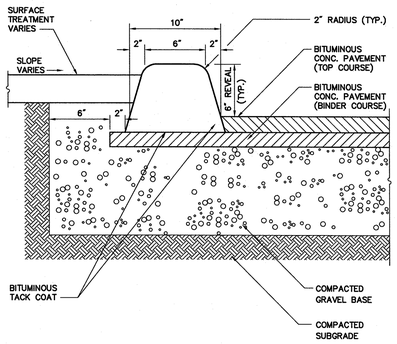

C-410 **BITUMINOUS CURB (BC)**

N.T.S.

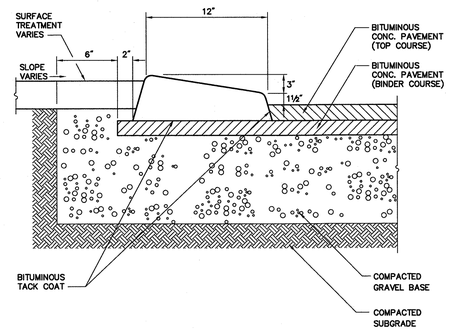

C-411 **CAPE COD BERM (CCB)**

N.T.S.

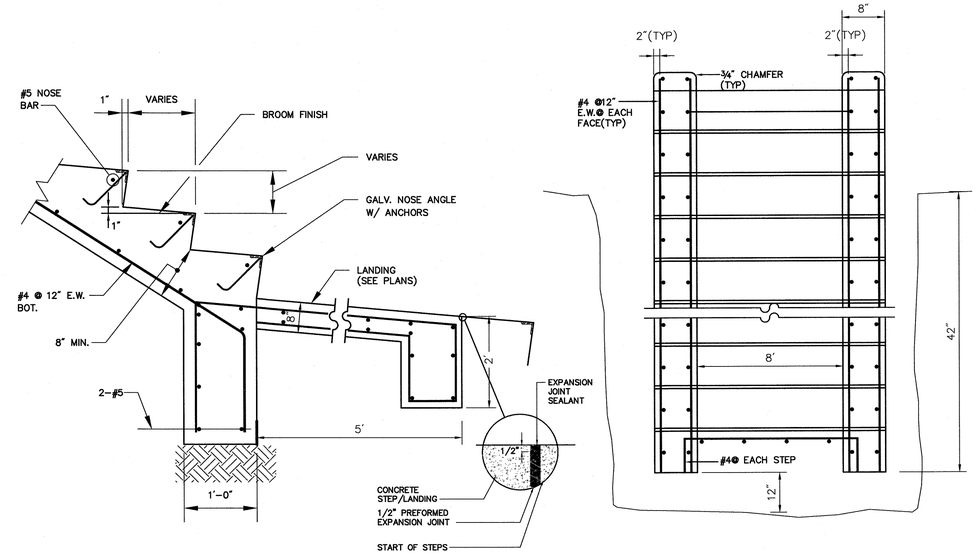

C-419 **CONCRETE STEPS**

N.T.S.

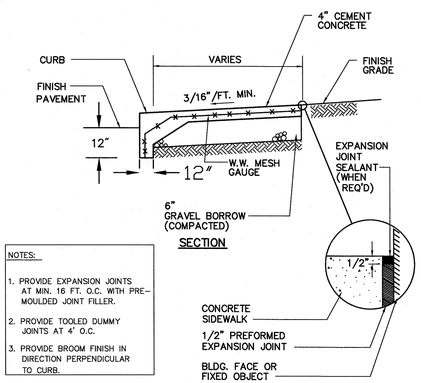

NOTES:

1. PROVIDE EXPANSION JOINTS AT MIN. 16 FT. O.C. WITH PRE-MOULDED JOINT FILLER.
2. PROVIDE TOOLED DUMMY JOINTS AT 4' O.C.
3. PROVIDE BROOM FINISH IN DIRECTION PERPENDICULAR TO CURB.

C-421 **MONOLITHIC CONCRETE SIDEWALK AND CURB**

N.T.S.

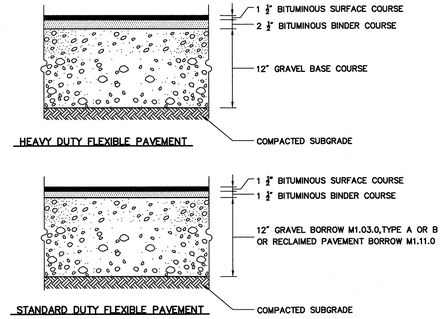

COMPOSITION AND COMPACTION ACCEPTANCE TESTS

1. OBTAIN SAMPLES FROM PLANT TO INDICATE CONFORMANCE WITH M3.11.09
2. PAVEMENT DENSITY AS OUTLINED IN M3.11.09
3. ALL SAMPLES TO BE TAKEN IN ACCORDANCE WITH AASHTO T230
4. MATERIALS SHALL MEET OR EXCEED THE REQUIREMENTS SPECIFIED IN SECTION M3.11.00 DIVISION□II , MATERIALS AND THE FOLLOWING SUBSECTIONS

MINERAL AGGREGATE :M3.11.04	BITUMINOUS MATERIALS :M3.11.06
MINERAL FILLER :M3.11.05	COMPOSITION OF BASE COURSE :M3.11.02

5. THE BITUMINOUS CONCRETE BASE COURSE SHALL BE CONSTRUCTED IN ACCORDANCE WITH RELEVANT SECTIONS/PROVISIONS OF SECTION 460 FOR CLASS I BITUMINOUS CONCRETE PAVEMENT, TYPE I-1
6. CLASS I BITUMINOUS PAVEMENT ,TYPE I-1 REQUIRED THE SAME TESTING AS BASE COURSE AND SHALL HAVE A MINIMUM OF 95% COMPACTION. TESTING TO BE COMPLETED BY METHODS OUTLINED IN M3.11.00

C-418 **BITUMINOUS CONCRETE PAVEMENT SECTIONS**

N.T.S.

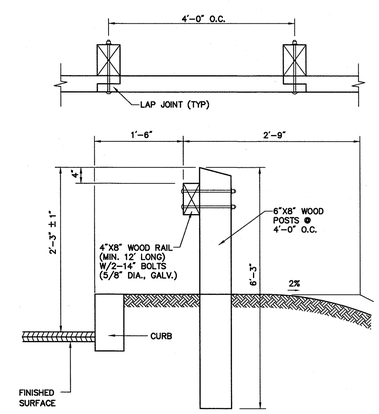

C-901 **WOOD GUARD RAIL**

N.T.S.

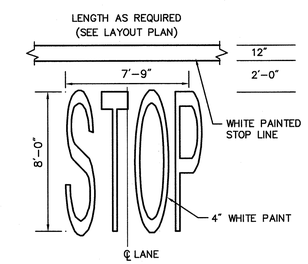

NOTE: PAVEMENT MARKINGS TO BE INSTALLED IN LOCATIONS SHOWN ON THE PLANS

C-708 **PAINTED PAVEMENT MARKING**

N.T.S.

No.	DATE	DESCRIPTION	BY
1			

REVISIONS

PROJ. MANAGER:	MBL
CHIEF DESIGNER:	MBL
REVIEWED BY:	DATE

SEAL

SEAL: COMMONWEALTH OF MASSACHUSETTS — JAMES E. MILLER — CIVIL — No. 31064 — REGISTERED PROFESSIONAL ENGINEER

PREPARED FOR

HAARTZ CORPORATION
87 HAYWARD ROAD

ACTON MASSACHUSETTS

SCALE:
HORZ.:
VERT.:
DATUM:
HORZ.:
VERT.:
0
GRAPHIC SCALE

MBL

LAND DEVELOPMENT & PERMITTING, CORP.
LAND DEVELOPMENT, TRANSPORTATION AND ENVIRONMENTAL SOLUTIONS
480 TURNPIKE STREET
SOUTH EASTON, MA 02375
P.508.297.2746 F.508.297.2756
EMAIL:info@MBLLandDevelopment.com
WEB: www.MBLLandDevelopment.com

SITE DEVELOPMENT PLANS

DETAILS

87 HAYWARD ROAD

ACTON MASSACHUSETTS

PROJ. No.: 2014-028
DATE: MAY 28, 2015

C-8.0

UCS: WRLD | MS VIEW: vp20 | LMAN: | CTB: MBL Standard
X:\2014\028\CIVIL\PLOT\2014-028 DETAILS.dwg 5/28/2015 12:33:18 PM EDT

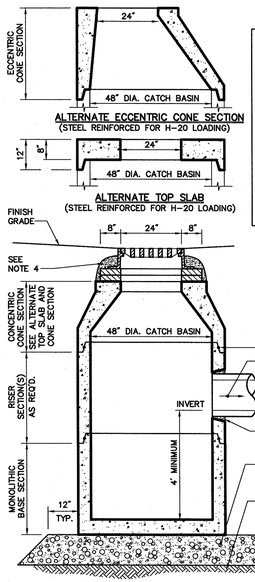

NOTES:

1. ALL SECTIONS SHALL BE DESIGNED FOR H-20 LOADING.
2. COPOLYMER MANHOLE STEPS SHALL BE INSTALLED AT 12" O.C. FOR THE FULL DEPTH OF THE STRUCTURE.
3. PROVIDE "V" KNOCKOUTS FOR PIPES WITH 2" MAX. CLEARANCE TO OUTSIDE OF PIPE. MORTAR ALL PIPE CONNECTIONS.
4. JOINT SEALANT BETWEEN PRECAST SECTIONS SHALL BE PREFORMED BUTYL RUBBER.
5. DRAIN MANHOLE FRAME AND COVER SHALL BE SET IN FULL MORTAR BED. ADJUST TO GRADE WITH CLAY BRICK AND MORTAR (2 BRICK COURSES TYPICALLY, 5 BRICK COURSES MAXIMUM)

C-104 **CATCH BASIN (CB)**

N.T.S.

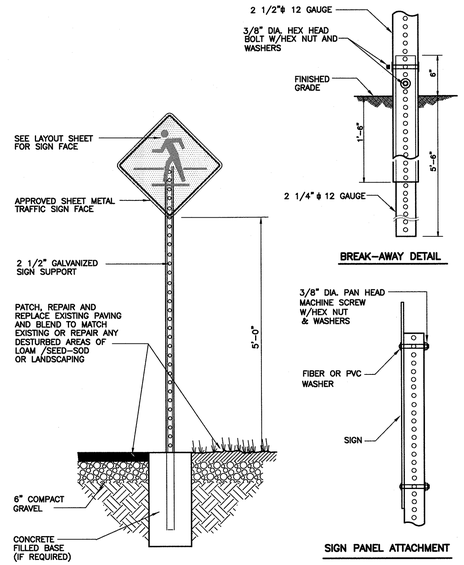

C-722 **TRAFFIC SIGN POST**

N.T.S.

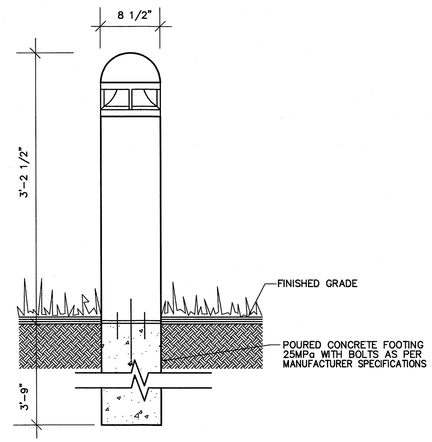

SPECIFICATIONS:

1. Heavy duty metal bollards constructed of die cast aluminum
2. Reflector is made of anodized aluminum and is encased behind a clear acrylic enclosure
3. Fasteners are stainless steel socket head screws
4. Colour: Black, White or Custom
5. Lamp sizes: 50W-HPS, 50W-MV, 100W-MH

C-801 **METAL WALK LIGHT**

N.T.S.

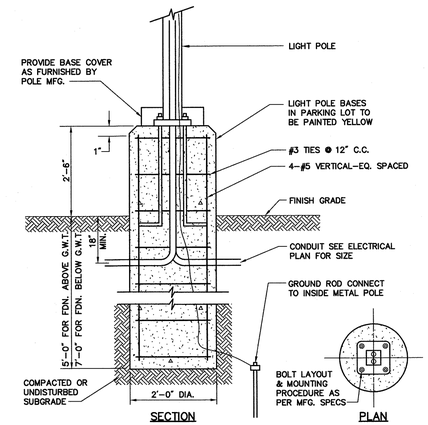

C-830 **LIGHT POLE INSTALLATION**

N.T.S.

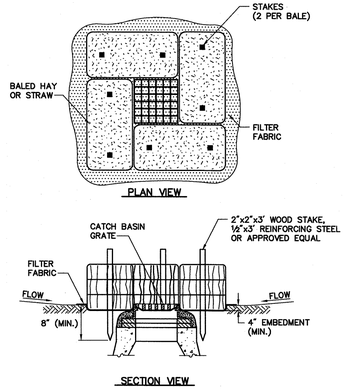

NOTES:

1. ENCLOSE STRUCTURE WITH HAY BALES IMMEDIATELY AFTER CATCH BASIN CONSTRUCTION. MAINTAIN UNTIL PAVING BINDER COURSE IS COMPLETE OR A PERMANENT STAND OF GRASS HAS BEEN ESTABLISHED.
2. IF GRATE IS AGAINST EXISTING CURB THEN HAY BALES ARE TO PLACED AROUND THREE SIDES OF GRATE ONLY.
3. WHEN STAKES MUST BE DRIVEN INTO PAVEMENT THE CONTRACTOR SHALL USE REINFORCING STEEL STAKES OR DRILL HOLES.
4. GRATE TO PLACED OVER FILTER FABRIC.
5. BALES SHALL BE INSPECTED PERIODICALLY AND AFTER ALL STORM EVENTS AND REPAIR OR REPLACEMENT SHALL BE PERFORMED PROMPTLY AS NEEDED.

C-607 **CATCH BASIN SEDIMENT TRAP**

N.T.S.

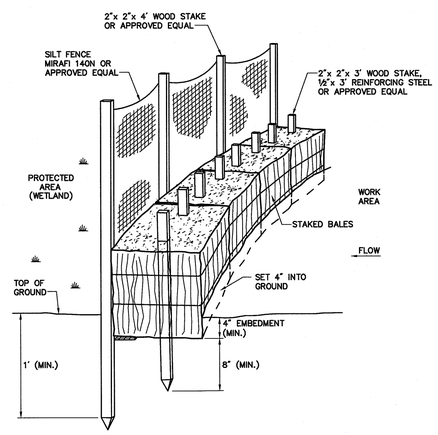

C-601 **SILT FENCE / HAY BALE BARRIER**

N.T.S.

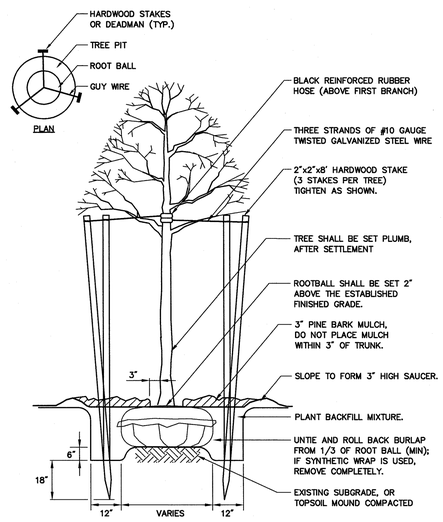

C-501 **TREE PLANTING (For Trees under 4" caliper)**

N.T.S.

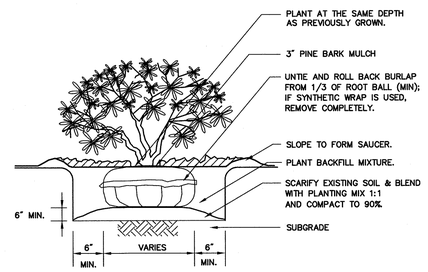

C-500 **SHRUB PLANTING**

N.T.S.

No.	DATE	DESCRIPTION	BY
1			

REVISIONS

PROJ. MANAGER:	MBL
CHIEF DESIGNER:	MBL
REVIEWED BY:	DATE

SEAL

SEAL: COMMONWEALTH OF MASSACHUSETTS — JAMES E. MILLER — CIVIL — No. 31064 — REGISTERED PROFESSIONAL ENGINEER

PREPARED FOR

HAARTZ CORPORATION
87 HAYWARD ROAD

ACTON MASSACHUSETTS

SCALE:
HORZ.:
VERT.:
DATUM:
HORZ.:
VERT.:
0
GRAPHIC SCALE

MBL
LAND DEVELOPMENT & PERMITTING, CORP.
LAND DEVELOPMENT, TRANSPORTATION AND ENVIRONMENTAL SOLUTIONS
480 TURNPIKE STREET
SOUTH EASTON, MA 02375
P.508.297.2746 F.508.297.2756
EMAIL:info@MBLLandDevelopment.com
WEB: www.MBLLandDevelopment.com

SITE DEVELOPMENT PLANS

DETAILS

87 HAYWARD ROAD

ACTON MASSACHUSETTS

PROJ. No.: 2014-028
DATE: MAY 28, 2015

C-9.0

UCS: MS VIEW: vp20 LMAN: CTB: MBL Standard
X:\2014\028\CIVIL\PLOT\2014-028 DETAILS.dwg 5/27/2015 11:28:46 AM EDT