SEC-EDG-2M/2MB-WM

Cree Edge™ Security Wall Pack Luminaire – Type II Medium – Wall Mount

Product Description

Slim, low profile design. Luminaire end cap is rugged die cast aluminum with integral, weathertight LED driver compartments and high performance aluminum heat sinks specifically designed for LED applications. Housing is rugged aluminum. Furnished with low copper lightweight mounting box designed for installation over standard and mud ring single gang J-Boxes. Secures to wall with four 3/16" (5mm) screws (by others). Conduit entry from top, bottom, sides and rear. Allows mounting for uplight or downlight. Designed and approved for easy through-wiring. Includes leaf / debris guard.

Performance Summary

Utilizes BetaLED® Technology

Patented NanoOptic® Product Technology

Made in the U.S.A. of U.S. and imported parts

CRI: Minimum 70 CRI

CCT: 5700K (+ / - 500K) Standard, 4000K (+ / - 300K)

Limited Warranty†: 10 years on luminaire / 10 years on Colorfast DeltaGuard® finish

Accessories

Field Installed Accessories
XA-BRDSPK Bird Spikes

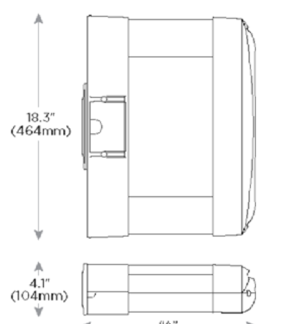

LED Count (x10)	Dim. "A"
02	9.9" (251mm)
04	11.9" (303mm)
06	13.9" (353mm)
08	15.9" (404mm)
10	17.9" (455mm)
12	19.9" (505mm)

Ordering Information

Example: SEC-EDG-2M-WM-02-E-UL-SV-350-OPTIONS

SEC-EDG		WM		E				
Product	Optic	Mounting	LED Count (x10)	Series	Voltage	Color Options	Drive Current	Options
SEC-EDG	2M Type II Medium 2MB Type II Medium w/BLS	WM Wall	02 04 06 08 10 12	E	UL Universal 120-277V UH Universal 347-480V 34 347V	SV Silver (Standard) BK Black BZ Bronze PB Platinum Bronze WH White	350 350mA 525* 525mA 700** 700mA	40K 4000K Color Temperature - Color temperature per luminaire DIM 0-10V Dimming - Control by others - Refer to dimming spec sheet for details - Can't exceed specified drive current F Fuse - Not available with UH or 34 voltages - Not available with all ML options. Refer to ML spec sheet for availability with ML options P Photocell - Not available with all ML options. Refer to ML spec sheet for availability with ML options - Must specify voltage other than UH ML Multi-Level - Refer to ML spec sheet for details

† See www.cree.com/lighting/products/warranty for warranty terms
* Available on luminaires with 20-80 LEDs
** Available on luminaires with 20-60 LEDs

BetaLED® TECHNOLOGY

Rev. Date: 12/20/13

CREE®

www.cree.com/lighting T (800) 236-6800 F (262) 504-5415

SEC-EDG-2M/2MB-WM

Product Specifications

CONSTRUCTION & MATERIALS

- Slim, low profile design
- Luminaire sides are rugged die cast aluminum with integral, weathertight LED driver compartments and high performance aluminum heat sinks specifically designed for LED applications
- Housing is rugged aluminum
- Furnished with low copper, light weight mounting box designed for installation over standard and mud ring single gang J-Boxes
- Luminaire can also be direct mounted to a wall and surface wired
- Secures to wall with four 3/16" (5mm) screws (by others)
- Conduit entry from top, bottom, sides, and rear
- Allows mounting for uplight or downlight
- Designed and approved for easy through-wiring
- Includes leaf / debris guard
- Exclusive Colorfast DeltaGuard® finish features an E-Coat epoxy primer with an ultra-durable powder topcoat, providing excellent resistance to corrosion, ultraviolet degradation and abrasion. Standard is silver. Bronze, black, white, and platinum bronze are also available

ELECTRICAL SYSTEM

- **Input Voltage:** 120-277V or 347-480V, 50/60Hz, Class 1 drivers
- **Power Factor:** > 0.9 at full load
- **Total Harmonic Distortion:** < 20% at full load
- Integral weathertight J-Box with leads (wire nuts) for easy power hook up
- Integral 10kV surge suppression protection standard
- To address inrush current, slow blow fuse or type C / D breaker should be used

REGULATORY & VOLUNTARY QUALIFICATIONS

- cULus Listed
- Suitable for wet locations
- Enclosure rated IP66 per IEC 60529 when ordered without P or ML options
- Consult factory for CE Certified products
- 10kV surge suppression protection tested in accordance with IEEE / ANSI C62.41.2
- Luminaire and finish endurance tested to withstand 5,000 hours of elevated ambient salt fog conditions as defined in ASTM Standard B 117
- Product qualified on the DesignLights Consortium™ ("DLC") Qualified Products List ("QPL") when ordered without full backlight control shield
- Dark Sky Friendly, IDA Approved
- Meets Buy American requirements within ARRA

Photometry

All published luminaire photometric testing performed to IESNA LM-79-08 standards by a NVLAP certified laboratory.

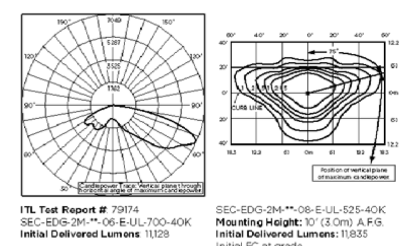

ITL Test Report #: 79174
SEC-EDG-2M-**-06-E-UL-700-40K
Initial Delivered Lumens: 11,128

SEC-EDG-2M-**-08-E-UL-525-40K
Mounting Height: 10' (3.0m) A.F.G.
Initial Delivered Lumens: 11,835
Initial FC at grade

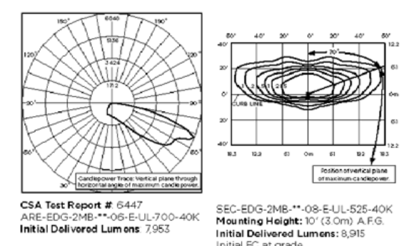

CSA Test Report #: 6447
ARE-EDG-2MB-**-06-E-UL-700-40K
Initial Delivered Lumens: 7,953

SEC-EDG-2MB-**-08-E-UL-525-40K
Mounting Height: 10' (3.0m) A.F.G.
Initial Delivered Lumens: 8,915
Initial FC at grade

IES Files
To obtain an IES file specific to your project consult:
http://www.cree.com/lighting/tools-and-support/exterior-ies-configuration-tool

Weight

LED Count (x10)	Weight
02	20 lbs (9.1kg)
04	22 lbs (10.0kg)
06	25 lbs (11.3kg)
08	27 lbs (12.2kg)
10	31 lbs (14.1kg)
12	32 lbs (14.5kg)

Lumen Output, Electrical, and Lumen Maintenance Data

Type II Medium and Type II Medium Distribution w/ BLS

LED Count (x10)	5700K Initial Delivered Lumens*	5700K BUG Ratings** Per TM-15-11	5700K Initial Delivered Lumens w/BLS*	5700K BUG Ratings** Per TM-15-11	4000K Initial Delivered Lumens*	4000K BUG Ratings** Per TM-15-11	4000K Initial Delivered Lumens w/BLS*	4000K BUG Ratings** Per TM-15-11	System Watts 120-480V	Total Current 120V	208V	240V	277V	347V	480V	50K Hours Projected Lumen Maintenance Factor @ 15°C (59°F)***
350mA @ 25°C (77°F)																
02	2,220	B1 U0 G1	1,672	B0 U0 G1	2,138	B1 U0 G1	1,610	B0 U0 G1	25	0.21	0.13	0.11	0.10	0.08	0.07	93%
04	4,440	B1 U0 G1	3,345	B0 U0 G1	4,276	B1 U0 G1	3,221	B0 U0 G1	46	0.36	0.23	0.21	0.20	0.15	0.12	
06	6,584	B2 U0 G2	4,959	B1 U0 G1	6,340	B2 U0 G2	4,776	B1 U0 G1	66	0.52	0.31	0.28	0.26	0.20	0.15	
08	8,729	B2 U0 G2	6,613	B1 U0 G1	8,454	B2 U0 G2	6,368	B1 U0 G1	90	0.75	0.44	0.38	0.34	0.26	0.20	
10	10,947	B2 U0 G2	8,246	B1 U0 G2	10,542	B2 U0 G2	7,941	B1 U0 G1	110	0.92	0.53	0.47	0.41	0.32	0.24	
12	13,137	B3 U0 G3	9,896	B1 U0 G2	12,650	B2 U0 G2	9,529	B1 U0 G2	130	1.10	0.63	0.55	0.48	0.38	0.29	
525mA @ 25°C (77°F)																
02	3,108	B1 U0 G1	2,341	B0 U0 G1	2,993	B1 U0 G1	2,254	B0 U0 G1	37	0.30	0.19	0.17	0.16	0.12	0.10	92%
04	6,216	B2 U0 G1	4,682	B1 U0 G1	5,986	B2 U0 G1	4,509	B1 U0 G1	70	0.58	0.34	0.31	0.28	0.21	0.16	
06	9,218	B2 U0 G2	6,943	B1 U0 G2	8,876	B2 U0 G2	6,686	B1 U0 G2	101	0.84	0.49	0.43	0.38	0.30	0.22	
08	12,290	B2 U0 G2	9,258	B1 U0 G2	11,835	B2 U0 G2	8,915	B1 U0 G2	133	1.15	0.66	0.58	0.51	0.39	0.28	
700mA @ 25°C (77°F)																
02	3,796	B1 U0 G1	2,860	B0 U0 G1	3,656	B1 U0 G1	2,754	B0 U0 G1	50	0.41	0.25	0.22	0.20	0.15	0.12	90%
04	7,593	B2 U0 G2	5,719	B1 U0 G1	7,311	B2 U0 G2	5,507	B1 U0 G1	93	0.78	0.46	0.40	0.36	0.27	0.20	
06	11,259	B2 U0 G2	8,481	B1 U0 G2	10,842	B2 U0 G2	8,167	B1 U0 G2	134	1.14	0.65	0.57	0.50	0.39	0.29	

* Actual production yield may vary between -4 and +10% of initial delivered lumens
** For more information on the IES BUG (Backlight-Uplight-Glare) Rating visit www.iesna.org/PDF/Erratas/TM-15-11BugRatingsAddendum.pdf
*** For recommended lumen maintenance factor data see TD-13. Calculated L_{70} based on 6,000 hours LM-80-08 testing: > 100,000 hours

© 2013 Cree, Inc. All rights reserved. For informational purposes only. Content is subject to change. See www.cree.com/patents for patents that cover these products. Cree®, the Cree logo, BetaLED®, NanoOptic®, the BetaLED Technology logo, and Colorfast DeltaGuard® are registered trademarks, and Cree Edge™ is a trademark of Cree, Inc. The UL logo is a registered trademark of UL LLC. DesignLights Consortium™ and the DLC QPL logo are trademarks of Northeast Energy Efficiency Partnerships, Inc.

www.cree.com/lighting T (800) 236-6800 F (262) 504-5415

CREE®

OSQ Series

LED Area/Flood Luminaire – Large

Product Description

The OSQ™ Area/Flood luminaire blends extreme optical control, advanced thermal management and modern, clean aesthetics. Built to last, the housing is rugged cast aluminum with an integral, weathertight LED driver compartment. Versatile mounting configurations offer simple installation. Its slim, low-profile design minimizes wind load requirements and blends seamlessly into the site providing even, quality illumination. 'S' Input power designator is a suitable upgrade for HID applications up to 750 Watts

Applications: Parking lots, walkways, campuses, auto dealerships, office complexes, and internal roadways.

Performance Summary

Utilizes BetaLED® Technology

NanoOptic® Precision Delivery Grid™ optic

Made in the U.S.A. of U.S. and imported parts

CRI: Minimum 70 CRI (4000K & 5700K); 80 CRI (3000K)

CCT: 3000K (+/- 300K), 4000K (+/- 300K), 5700K (+/- 500K)

Limited Warranty†: 10 years on luminaire/10 years on Colorfast DeltaGuard® finish

Accessories

Field-Installed	
Backlight Shield OSQ-BLSLF – Front facing optics	OSQ-BLSLR – Rotated optics

DA Mount

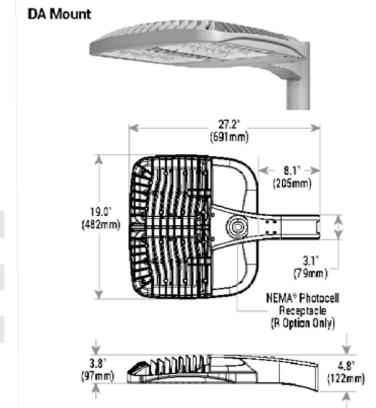

AA Mount

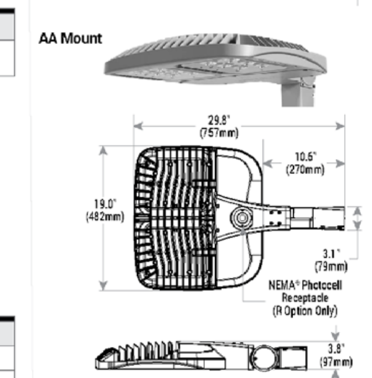

Ordering Information

Fully assembled luminaire is composed of two components that must be ordered separately:
Example: **Mount:** OSQ-AA SV + **Luminaire:** OSQ A NM 2ME S 40K-UL SV

Mount (Luminaire must be ordered separately)				
OSQ-				
OSQ-AA Adjustable Arm OSQ-DA Direct Arm	Color Options:	SV Silver BK Black	BZ Bronze PB Platinum Bronze	WH White

Luminaire (Mount must be ordered separately)									
OSQ	A	NM		S					
Product	Version	Mounting	Optic	Input Power Designator	CCT	–	Voltage	Color Options	Options
OSQ	A	NM No Mount	2ME* Type II Medium 3ME* Type III Medium 4ME* Type IV Medium 5ME Type V Medium 5SH Type V Short 15D 15° Flood 25D 25° Flood 40D 40° Flood 60D 60° Flood	S 223W	30K 3000K 40K 4000K 57K 5700K	– US * Canada	UL Universal 120-277V UH Universal 347-480V	SV Silver BK Black BZ Bronze PB Platinum Bronze WH White	DIM 0-10V Dimming - Control by others - Refer to Dimming spec sheet for details - Can't exceed wattage of specified input power designator F Fuse - When code dictates fusing, use time delay fuse ML Multi-Level - Refer to ML spec sheet for details - High: 100%, Low: 30% - Intended for downlight applications at 0° tilt Q9 Field Adjustable Output - Refer to Field Adjustable Output spec sheet for details R NEMA® Photocell Receptacle - Intended for downlight applications with maximum 45° tilt - Photocell by others RL Rotate Left - LED and optic are rotated to the left RR Rotate Right - LED and optic are rotated to the right

† See www.cree.com/lighting/products/warranty for warranty terms
* Available with Backlight Shield when ordered with field-installed accessory (see table above)

BetaLED® TECHNOLOGY

Rev. Date: V3 08/22/2014

CREE®

US: www.cree.com/lighting T (800) 236-6800 F (262) 504-5415 Canada: www.cree.com/canada T (800) 473-1234 F (800) 890-7507

OSQ Series – Large

Product Specifications

CONSTRUCTION & MATERIALS

- Slim, low profile design minimizes wind load requirements
- Luminaire housing is rugged die cast aluminum with an integral, weathertight LED driver compartment and high performance heat sink
- Convenient interlocking mounting method on direct arm mount. Mounting adapter is rugged die cast aluminum and mounts to 3-6" (76-152mm) square or round pole, secured by two 5/16-18 UNC bolts spaced on 2" (51mm) centers
- Mounting for the adjustable arm mount adapter is rugged die cast aluminum and mounts to 2" (51mm) IP, 2.375" (60mm) O.D. tenon
- Adjustable arm mount can be adjusted 180° in 2.5° increments
- Designed for uplight and downlight applications
- Exclusive Colorfast DeltaGuard® finish features an E-Coat epoxy primer with an ultra-durable powder topcoat, providing excellent resistance to corrosion, ultraviolet degradation and abrasion. Silver, bronze, black, white, and platinum bronze are available
- **Weight:** 28.5 lbs. (13kg)

ELECTRICAL SYSTEM

- **Input Voltage:** 120-277V or 347-480V, 50/60Hz, Class 1 drivers
- **Power Factor:** > 0.9 at full load
- **Total Harmonic Distortion:** < 20% at full load
- Integral 10kV surge suppression protection standard
- To address inrush current, slow blow fuse or type C/D breaker should be used

REGULATORY & VOLUNTARY QUALIFICATIONS

- cULus Listed
- Suitable for wet locations
- Enclosure rated IP66 per IEC 60529 when ordered without R option
- Consult factory for CE Certified products
- Pending certification to ANSI C136.31-2001, 3G bridge and overpass vibration standards
- 10kV surge suppression protection tested in accordance with IEEE/ANSI C62.41.2
- Luminaire and finish endurance tested to withstand 5,000 hours of elevated ambient salt fog conditions as defined in ASTM Standard B 117
- Meets Buy American requirements within ARRA
- DLC qualified when ordered with 30K (5ME, 5SH optics), 40K (2ME, 3ME, 4ME, 5ME, 5SH optics), or 57K (2ME, 3ME, 4ME, 5ME, 5SH optics). Please refer to http://www.designlights.org/QPL for most current information

Electrical Data*

Input Power Designator	System Watts 120-480V	Total Current 120V	208V	240V	277V	347V	480V
S	223	1.94	1.13	0.99	0.85	0.65	0.47

* Electrical data at 25°C (77°F)

Recommended Cree® Outdoor Luminaire Lumen Maintenance Factors (LMF)[1]

Ambient	Input Power Designator	Initial LMF	25K hr Projected[2] LMF	50K hr Projected[2] LMF	75K hr Calculated[3] LMF	100K hr Calculated[3] LMF
5°C (41°F)	S	1.04	0.99	0.94	0.88	0.84
10°C (50°F)	S	1.03	0.98	093	0.88	0.83
15°C (59°F)	S	1.02	0.97	0.92	0.87	0.83
20°C (68°F)	S	1.01	0.96	0.91	0.85	0.82
25°C (77°F)	S	1.00	0.95	0.90	0.85	0.81

[1] Lumen maintenance values at 25°C (77°F) are calculated per TM-21 based on LM-80 data and in-situ luminaire testing
[2] In accordance with IESNA TM-21-11, Projected Values represent interpolated value based on time durations that are within six times (6X) the IESNA LM-80-08 total test duration (in hours) for the device under testing ((DUT) i.e. the packaged LED chip)
[3] In accordance with IESNA TM-21-11, Calculated Values represent time durations that exceed six times (6X) the IESNA LM-80-08 total test duration (in hours) for the device under testing ((DUT) i.e. the packaged LED chip)

US: www.cree.com/lighting T (800) 236-6800 F (262) 504-5415 Canada: www.cree.com/canada T (800) 473-1234 F (800) 890-7507

CREE®

SECTION 10.6.3.2

NOTES:

PARKING LOTS, DRIVEWAYS, WALKWAYS,BIKEWAYS(INCLUDES 5' MARGIN OF GRADE OR LANDSCAPE)@0.1 WATTS PER SF
0.1WATTS/SF x 30,313 SF = 3,031 WATTS

TOTAL = 3,031 WATTS ALLOWED

LIGHTS	WATTS	NUMBER	TOTAL
130W FIXTURES	130	21	2,730

TOTAL = 2,730 WATTS PROPOSED

UCS: WRLD | MS VIEW: vp20 | LMAN: | CTB: MBL Standard

X:\2014\028\lighting\2014-028SITELIGHTING.dwg 6/26/2015 5:34:31 PM EDT

No.	DATE	DESCRIPTION	BY
3	06/26/2015	PER PLANNING OFFICE MEETING 06/23/2015	BMD
2	06/19/2015	AREA CALCULATIONS PER PB OFFICE	BMD
1	6/9/2015	ADD ZONING TABLE PER PLANNING OFFICE	THL

REVISIONS

PROJ. MANAGER: MBL
CHIEF DESIGNER: MBL
REVIEWED BY: DATE

SEAL

SEAL

PREPARED FOR

HAARTZ CORPORATION
87 HAYWARD ROAD

ACTON MASSACHUSETTS

SCALE:
HORZ.: AS SHOWN
VERT.:
DATUM:
HORZ.:
VERT.:

0

GRAPHIC SCALE

MBL

LAND DEVELOPMENT & PERMITTING, CORP.
LAND DEVELOPMENT, TRANSPORTATION AND ENVIRONMENTAL SOLUTIONS
480 TURNPIKE STREET
SOUTH EASTON, MA 02375
P.508.297.2746 F.508.297.2756
EMAIL:info@MBLLandDevelopment.com
WEB: www.MBLLandDevelopment.com

SITE DEVELOPMENT PLANS

SITE LIGHTING DETAILS

87 HAYWARD ROAD

ACTON MASSACHUSETTS

PROJ. No.: 2014-028
DATE: MAY 28, 2015

C-7.1