# *Nagog Pond Water Treatment Plant*
# *Acton, Massachusetts*
# *Notice of Intent*

## *WPA Form 3*
## *DEP Transmittal X268171*

***Prepared For:***
***Town of Concord***
***Public Works Department***
***November 2015***


Environmental Partners GROUP
A partnership for engineering solutions

*Quincy Office:*
1900 Crown Colony Drive, Suite 402, Quincy, MA 02169
TL 617.657.0200 • FX 617-657-0201

*Hyannis Office:*
396 North Street, Hyannis, MA 02601
TL 508.568.5103 • FX 508.568.5125

*Woburn Office:*
18 Commerce Way, Suite 2000, Woburn, MA 01801
TL 781.281.2542 • FX 781.281.2543

**www.envpartners.com**

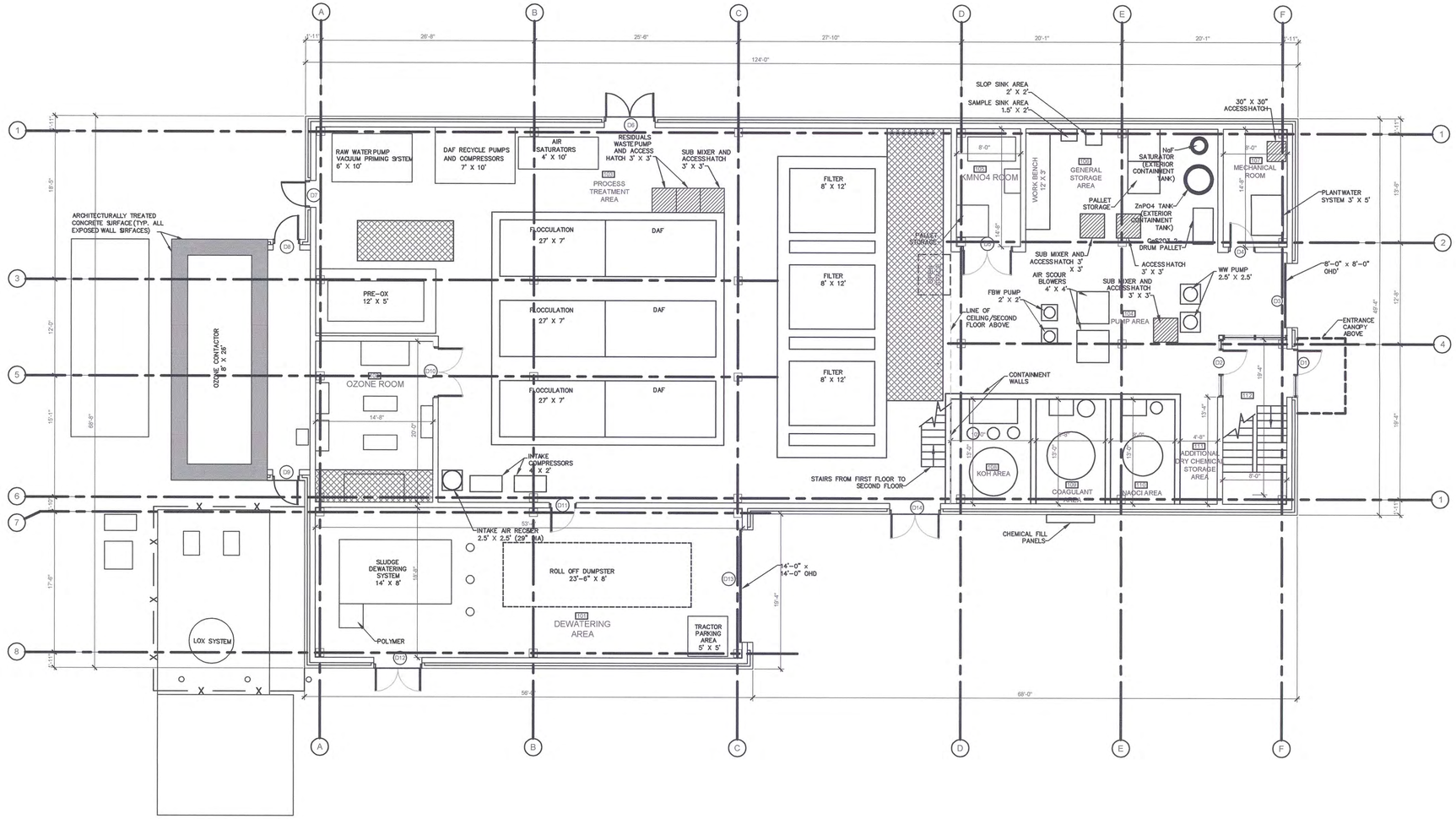


Environmental Partners GROUP
A partnership for engineering solutions.

LIN ASSOCIATES, INC.
CONSULTING ENGINEERS

DiMarinisi & Wolfe
ARCHITECTS • URBAN DESIGNERS
BOSTON, MASSACHUSETTS

| MARK | DATE | DESCRIPTION |
|---|---|---|

| | |
|---|---|
| Scale | 1/8" = 1'-0" |
| Date | NOVEMBER 2015 |
| Job No. | 200-1501 |
| Designed by | AJD |
| Drawn by | TBC |
| Checked by | AJD |
| Approved by | AJD |

THIS LINE IS ONE INCH LONG WHEN PLOTTED AT FULL SCALE ON A 22" X 34" DRAWING

NAGOG POND WATER TREATMENT PLANT

TOWN OF CONCORD, MASSACHUSETTS

FIRST FLOOR PLAN

FOR PERMITTING

Sheet No.

A-1

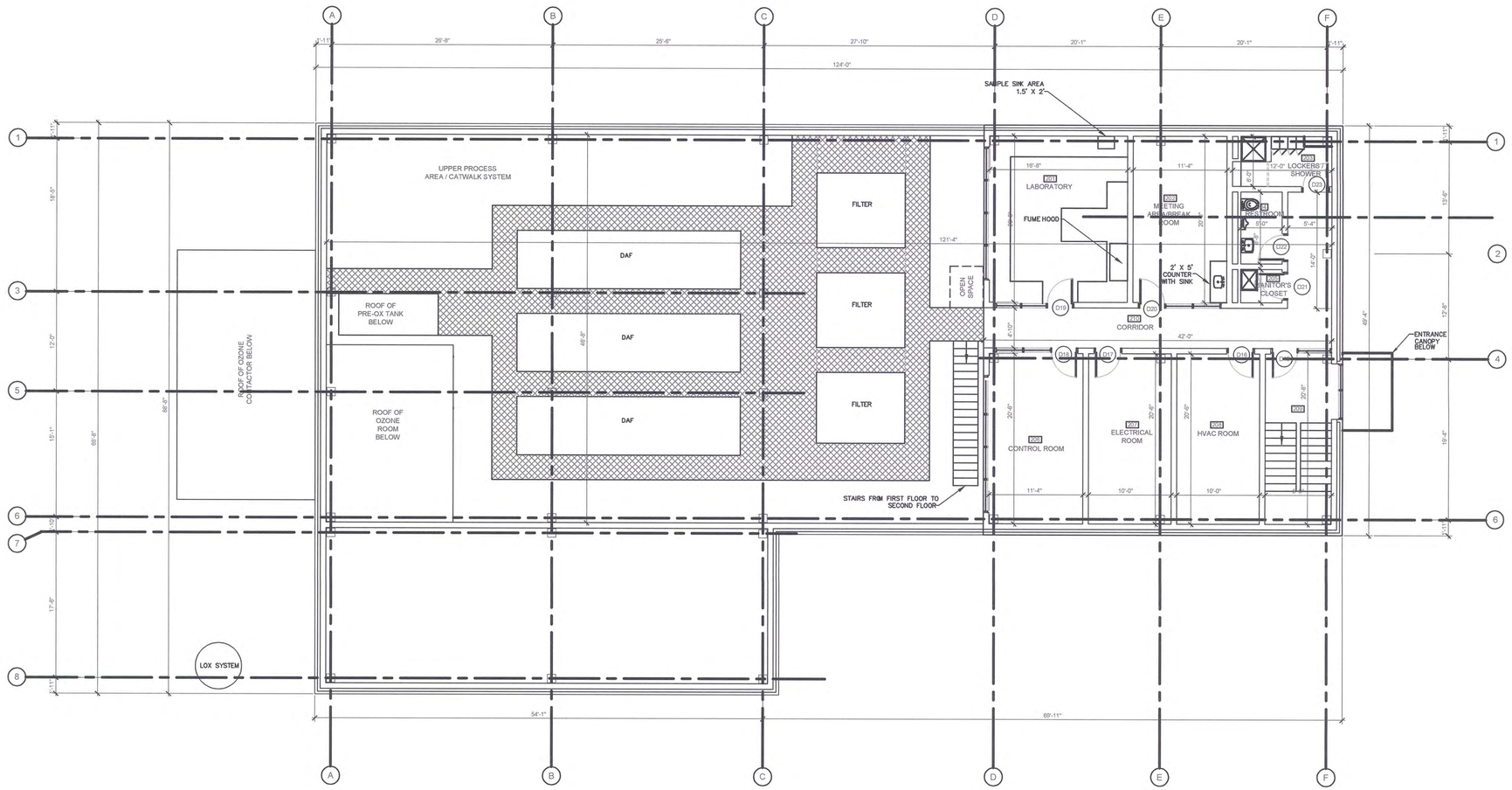


| | | | | |
|---|---|---|---|---|
| | | | Scale | 1/8" = 1'-0" |
| | | | Date | NOVEMBER 2015 |
| | | | Job No. | 200-1501 |
| | | | Designed by | AJD |
| | | | Drawn by | TBC |
| | | | Checked by | AJD |
| MARK | DATE | DESCRIPTION | Approved by | AJD |

THIS LINE IS ONE INCH LONG WHEN PLOTTED AT FULL SCALE ON A 22" X 34" DRAWING

Environmental Partners GROUP
A partnership for engineering solutions.

LIN ASSOCIATES, INC.
CONSULTING ENGINEERS

DiMarinisi & Wolfe
ARCHITECTS • URBAN DESIGNERS
BOSTON, MASSACHUSETTS

NAGOG POND WATER TREATMENT PLANT

TOWN OF CONCORD, MASSACHUSETTS

SECOND FLOOR PLAN

FOR PERMITTING

Sheet No.

A-2

1 EAST ELEVATION (FRONT)

2 SOUTH ELEVATION

3 WEST ELEVATION

4 NORTH ELEVATION

Environmental Partners GROUP
A partnership for engineering solutions.

LIN ASSOCIATES, INC.

DiMarinisi & Wolfe
ARCHITECTS • URBAN DESIGNERS
BOSTON, MASSACHUSETTS

COMMONWEALTH OF MASSACHUSETTS
STEPHEN C. OLSON
CIVIL
No. 39143
REGISTERED PROFESSIONAL ENGINEER

| MARK | DATE | DESCRIPTION |
|---|---|---|
| | | |

| | |
|---|---|
| Scale | 1/8" = 1'-0" |
| Date | NOVEMBER 2015 |
| Job No. | 200-1501 |
| Designed by | AJD |
| Drawn by | TBC |
| Checked by | AJD |
| Approved by | AJD |

THIS LINE IS ONE INCH LONG WHEN PLOTTED AT FULL SCALE ON A 22" X 34" DRAWING

NAGOG POND WATER TREATMENT PLANT

TOWN OF CONCORD, MASSACHUSETTS

EXTERIOR ELEVATIONS

FOR PERMITTING

Sheet No.

A-3

## ROOM / SPACE FINISH SCHEDULE

| ROOM / SPACE NO. | ROOM NAME | BASE | FLOOR | NORTH WALL | WEST WALL | EAST WALL | SOUTH WALL | CEILING | HEIGHT | REMARKS | ROOM / SPACE NO. |
|---|---|---|---|---|---|---|---|---|---|---|---|
| 101 | DEWATERING AREA | —— | CONC/SLR | CMU/PTD | CMU/PTD | CMU/PTD | CMU/PTD | ES/PTD | VARIES | | 101 |
| 102 | OZONE ROOM | —— | CONC/SLR | CMU/PTD | CMU/PTD | CMU/PTD | CMU/PTD | CP/PTD | 10' - 0" | 2-HOUR CONSTRUCTION | 102 |
| 103 | PROCESS TREATMENT AREA | —— | CONC/SLR | CMU/PTD | CMU/PTD | CMU/PTD | CMU/PTD | ES/PTD | VARIES | | 103 |
| 104 | PUMP AREA | —— | CONC/SLR | CMU/PTD | CMU/PTD | CMU/PTD | CMU/PTD | ES/PTD | 10' - 0" | | 104 |
| 105 | KMNO4 ROOM | —— | CONC/CRFF | CMU/PTD | CMU/PTD | CMU/PTD | CMU/PTD | CP/PTD | 10' - 0" | 2-HOUR CONSTRUCTION | 105 |
| 106 | GENERAL STORAGE AREA | —— | CONC/SLR | CMU/PTD | CMU/PTD | CMU/PTD | —— | ES/PTD | 10' - 0" | | 106 |
| 107 | MECHANICAL ROOM | —— | CONC/SLR | CMU/PTD | CMU/PTD | CMU/PTD | CMU/PTD | ES/PTD | 10' - 0" | | 107 |
| 108 | KOH AREA | —— | CONC/CRFF | CONC/CRWF | CONC/CRWF | CONC/CRWF | CONC/CRWF | ES/PTD | 10' - 0" | NOTE: CONC. CONTAINMENT WALLS - 2'-0" (H) | 108 |
| 109 | COAGULANT AREA | —— | CONC/CRFF | CONC/CRWF | CONC/CRWF | CONC/CRWF | CONC/CRWF | ES/PTD | 10' - 0" | NOTE: CONC. CONTAINMENT WALLS - 2'-0" (H) | 109 |
| 110 | NAOCI AREA | —— | CONC/CRFF | CONC/CRWF | CONC/CRWF | CONC/CRWF | CONC/CRWF | ES/PTD | 10' - 0" | NOTE: CONC. CONTAINMENT WALLS - 2'-0" (H) | 110 |
| 111 | ADDITIONAL DRY CHEMICAL STORAGE AREA | —— | CONC/SLR | —— | CONC/PTD | CONC/PTD | CONC/PTD | ES/PTD | 10' - 0" | | 111 |
| 112 | STAIR | RB | SRF | SF | CMU/PTD/SF | CMU/PTD/SF | CMU/PTD | ES/PTD | VARIES | | 112 |
| | | | | | | | | | | | |
| 201 | LABORATORY | RB | SRF | CMU/PTD | CMU/PTD | CMU/PTD | CMU/PTD | MRACT | 10' - 0" | | 201 |
| 202 | MEETING AREA/BREAK ROOM | RB | SRF | CMU/PTD | CMU/PTD | CMU/PTD | CMU/PTD | MRACT | 10' - 0" | | 202 |
| 203 | LOCKERS/SHOWER | RB/CT | SRF/CT | CMU/PTD/CT | CMU/PTD/CT | CMU/PTD/CT | CMU/PTD/CT | MRGWB/PTD | 10' - 0" | | 203 |
| 204 | RESTROOM | CT | CT | CT | CT | CT | CT | MRGWB/PTD | 10' - 0" | | 204 |
| 205 | JANITOR'S CLOSET | CT | CT | CT | CT | CT | CT | MRGWB/PTD | 8' - 0" | | 205 |
| 206 | CONTROL ROOM | RB | SRF | CMU/PTD | CMU/PTD | CMU/PTD | CMU/PTD | MRACT | 10' - 0" | | 206 |
| 207 | ELECTRICAL ROOM | —— | CONC/SLR | CMU/PTD | CMU/PTD | CMU/PTD | CMU/PTD | MRGWB/PTD | 10' - 0" | | 207 |
| 208 | HVAC ROOM | —— | CONC/SLR | CMU/PTD | CMU/PTD | CMU/PTD | CMU/PTD | MRGWB/PTD | 10' - 0" | | 208 |
| 209 | STAIR | RB | SRF | SF | CMU/PTD | CMU/PTD | CMU/PTD | MRGWB/PTD | VARIES | | 209 |
| 210 | CORRIDOR | RB | SRF | CMU/PTD | —— | CMU/PTD | CMU/PTD | MRACT | 10' - 0" | | 210 |

ABBREVIATIONS :
ACMU - ACOUSTIC CONCRETE MASONRY UNIT
CMU - CONCRETE MASONRY UNIT
CONC - CONCRETE
CP - CONCRETE PLANK
CRFF - CHEMICAL RESISTANT FLOOR FINISH
CRWF - CHEMICAL RESISTANT WALL FINISH
CT - CERAMIC TILE
ES - EXPOSED STRUCTURE
GWB - GYPSUM WALL BOARD
MRGWB - MOISTURE RESISTANT GYPSUM WALL BOARD
MRACT - MOISTURE RESISTANT ACOUSTIC TILE
PTD - PAINTED
RB - RUBBER BASE
SF - STOREFRONT
SLR - SEALER
SRF - SHEET RUBBER FLOOR

GENERAL NOTES :
1. ALL EXPOSED STRUCTURAL STEEL SHALL BE PAINTED

# DOOR SCHEDULE

| DOOR OPNG. NO. | FRAME TYPE | M.O. / R.O. W | M.O. / R.O. H | DEPTH | JAMB | JAMB | HEAD | THRESHOLD | MATERIAL | FINISH | COLOR | LEAF TYPE | QTY. | W | H | MATERIAL | THICKNESS | FINISH | COLOR | UL LABEL | HARDWARE | GLAZING | SIGNAGE | REMARKS | DOOR OPNG. NO. |
|---|---|---|---|---|---|---|---|---|---|---|---|---|---|---|---|---|---|---|---|---|---|---|---|---|---|
| D1 | 1 | VARIES | VARIES | 6" | | | | T1 | ALUM | FF | TBS | E | 1 | 3'-0" | 8'-0" | ALUM | 1-3/4" | FF | TBS | —— | | TIG | —— | —— | D1 |
| D2 | 2 | 6'-8" | 10'-0" | 6" | | | | T2 | ALUM | FF | TBS | E | 1 | 3'-0" | 8'-0" | ALUM | 1-3/4" | FF | TBS | —— | | TG | —— | —— | D2 |
| D3 | 3 | 8'-0" | 8'-0" | MS | | | | —— | STL | FF | TBS | F | 1 | 8'-0" | 8'-0" | STL | 2" | FF | TBS | —— | MS | TIG | —— | MOTORIZED INSULATED OHD - 115 SINGLE PHASE | D3 |
| D4 | 4 | 3'-4" | 7'-4" | 5-3/4" | | | | T4 | ALUM | FF | TBS | C | 1 | 3'-0" | 7'-0" | ALUM | 1-3/4" | FF | TBS | —— | | —— | MECHANICAL ROOM | —— | D4 |
| D5 | 5 | 6'-8" | 7'-4" | 5-3/4" | | | | T4 | ALUM | FF | TBS | C | 2 | 3'-0" | 7'-0" | ALUM | 1-3/4" | FF | TBS | 2 HR | | —— | KMNO4 ROOM | 2 HOUR CONSTRUCTION | D5 |
| D6 | 6 | 6'-8" | 10'-8" | 5-3/4" | | | | T1 | ALUM | FF | TBS | A | 1 | 3'-0" | 8'-0" | ALUM | 1-3/4" | FF | TBS | —— | | TIG | —— | INSULATED DOORS | D6 |
| D7 | 4 | 3'-4" | 8'-8" | 5-3/4" | | | | T1 | ALUM | FF | TBS | B | 1 | 3'-0" | 8'-4" | ALUM | 1-3/4" | FF | TBS | —— | | —— | —— | INSULATED DOOR | D7 |
| D8 | 4 | 3'-4" | 8'-8" | 5-3/4" | | | | T1 | ALUM | FF | TBS | C | 1 | 3'-0" | 8'-4" | ALUM | 1-3/4" | FF | TBS | —— | | —— | —— | INSULATED DOOR | D8 |
| D9 | 4 | 3'-4" | 8'-8" | 5-3/4" | | | | T1 | ALUM | FF | TBS | C | 1 | 8'-0" | 8'-4" | ALUM | 1-3/4" | FF | TBS | —— | | —— | —— | INSULATED DOOR | D9 |
| D10 | 5 | 6'-8" | 8'-8" | 5-3/4" | | | | T4 | ALUM | FF | TBS | C | 2 | 3'-0" | 8'-4" | ALUM | 1-3/4" | FF | TBS | 2 HR | | —— | OZONE ROOM | 2 HOUR CONSTRUCTION | D10 |
| D11 | 4 | 3'-4" | 8'-8" | 5-3/4" | | | | T4 | ALUM | FF | TBS | B | 1 | 3'-0" | 8'-4" | ALUM | 1-3/4" | FF | TBS | —— | | —— | DEWATERING | INSULATED DOOR | D11 |
| D12 | 5 | 6'-8" | 8'-8" | 5-3/4" | | | | T4 | ALUM | FF | TBS | C | 2 | 3'-0" | 8'-4" | ALUM | 1-3/4" | FF | TBS | —— | | —— | —— | INSULATED DOOR | D12 |
| D13 | 3 | 14'-0" | 14'-0" | MS | | | | —— | STL | FF | TBS | G | 1 | 14'-0" | 14'-0" | STL | 2" | FF | TBS | —— | MS | TIG | —— | MOTORIZED INSULATED OHD - 115 SINGLE PHASE | D13 |
| D14 | 6 | 6'-8" | 10'-8" | 5-3/4" | | | | T1 | ALUM | FF | TBS | A | 1 | 3'-0" | 8'-0" | ALUM | 1-3/4" | FF | TBS | —— | | TIG | —— | INSULATED DOORS | D14 |
| D15 | 2 | 6'-8" | 10'-0" | 6" | | | | T1 | ALUM | FF | TBS | E | 1 | 3'-0" | 8'-0" | ALUM | 1-3/4" | FF | TBS | —— | | TG | —— | —— | D15 |
| D16 | 4 | 3'-4" | 7'-4" | 5-3/4" | | | | T2 | ALUM | FF | TBS | C | 1 | 3'-0" | 7'-0" | ALUM | 1-3/4" | FF | TBS | —— | | —— | HVAC ROOM | —— | D16 |
| D17 | 4 | 3'-4" | 7'-4" | 5-3/4" | | | | —— | ALUM | FF | TBS | C | 1 | 3'-0" | 7'-0" | ALUM | 1-3/4" | FF | TBS | —— | | —— | ELECTRICAL ROOM | —— | D17 |
| D18 | 4 | 3'-4" | 7'-4" | 5-3/4" | | | | —— | ALUM | FF | TBS | B | 1 | 3'-0" | 7'-0" | ALUM | 1-3/4" | FF | TBS | —— | | TG | CONTROL ROOM | —— | D18 |
| D19 | 4 | 3'-4" | 7'-4" | 5-3/4" | | | | —— | ALUM | FF | TBS | B | 1 | 3'-0" | 7'-0" | ALUM | 1-3/4" | FF | TBS | —— | | TG | LABORATORY | —— | D19 |
| D20 | 4 | 3'-4" | 7'-4" | 5-3/4" | | | | —— | ALUM | FF | TBS | B | 1 | 3'-0" | 7'-0" | ALUM | 1-3/4" | FF | TBS | —— | | TG | BREAK ROOM | —— | D20 |
| D21 | 4 | 3'-4" | 7'-4" | 5-3/4" | | | | T3 | ALUM | FF | TBS | C | 1 | 3'-0" | 7'-0" | ALUM | 1-3/4" | FF | TBS | —— | | —— | JANITOR'S CLOSET | —— | D21 |
| D22 | 4 | 3'-4" | 7'-4" | 5-3/4" | | | | T3 | ALUM | FF | TBS | C | 1 | 3'-0" | 7'-0" | ALUM | 1-3/4" | FF | TBS | —— | | —— | RESTROOM | —— | D22 |
| D23 | 4 | 3'-4" | 7'-4" | 5-3/4" | | | | —— | ALUM | FF | TBS | C | 1 | 3'-0" | 7'-0" | ALUM | 1-3/4" | FF | TBS | —— | | —— | LOCKER ROOM | —— | D23 |

ABBREVIATIONS :
ALUM - ALUMINUM
FF - FACTORY FINISH
MS - MANUFACTURER'S STANDARD
OHD - OVERHEAD DOOR
PTD - PAINTED
STL - STEEL
TBS - TO BE SELECTED
TG - ¼" TEMPERED GLASS
TIG - 1" TEMPERED INSULATED GLASS
WGL - ¼" WIRE GLASS

GENERAL NOTES
1. ALL EXTERIOR AND INTERIOR CMU DOOR WALL OPENINGS TO RECEIVE CMU LINTEL BLOCKS, 8" BEARING AT EACH END OK AS OTHERWISE NOTED ON STRUCTURAL DRAWINGS

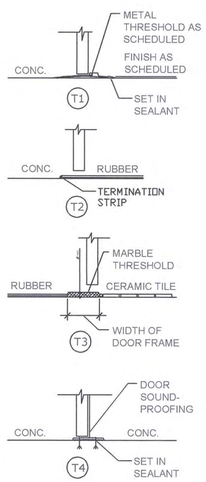


THRESHOLDS:

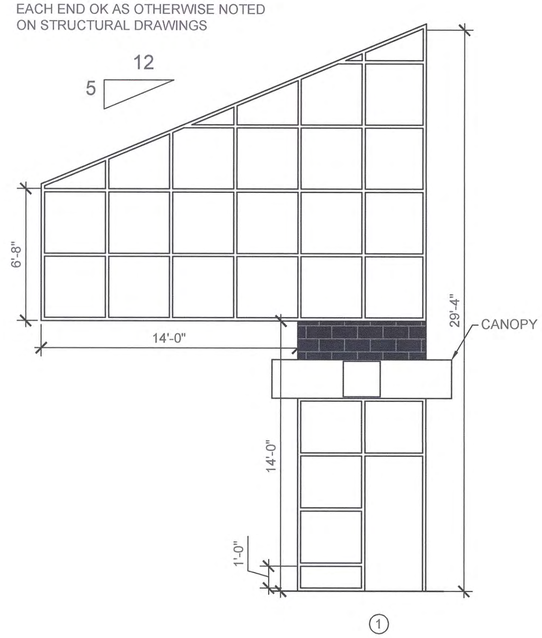


FRAME TYPES:

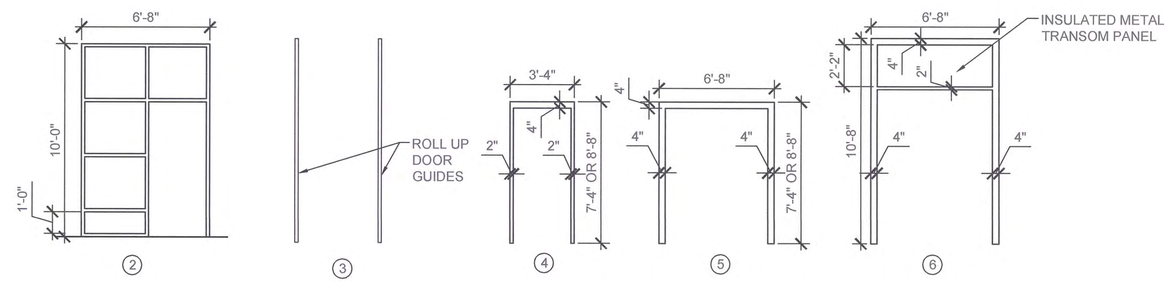


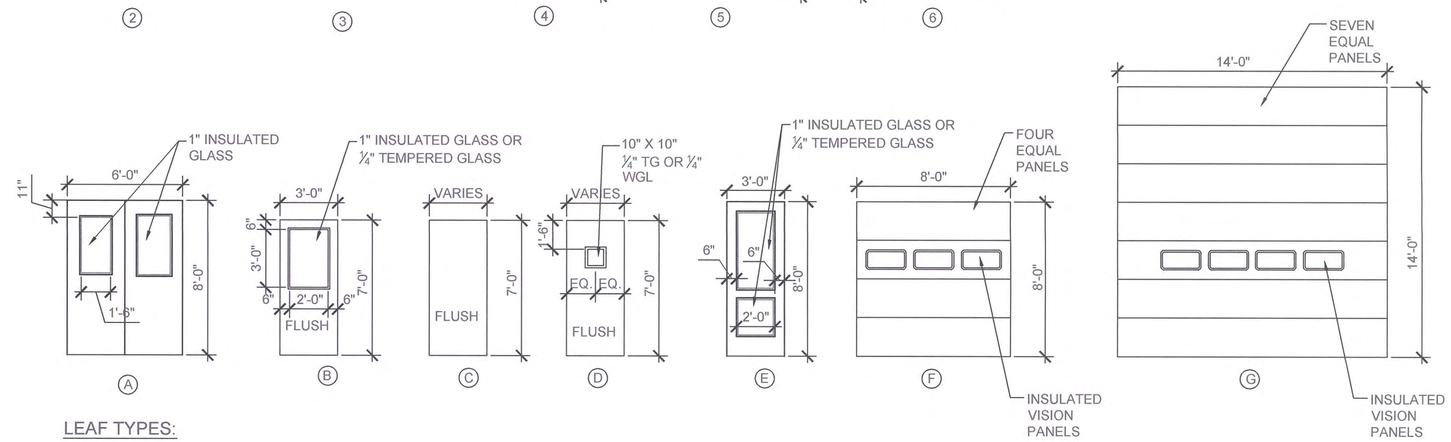


LEAF TYPES:

Environmental Partners GROUP
A partnership for engineering solutions.

LIN ASSOCIATES, INC.

DiMarinisi & Wolfe
ARCHITECTS • URBAN DESIGNERS
BOSTON, MASSACHUSETTS

| MARK | DATE | DESCRIPTION |
|---|---|---|
| | | |

| | |
|---|---|
| Scale | N.T.S. |
| Date | NOVEMBER 2015 |
| Job No. | 200-1501 |
| Designed by | AJD |
| Drawn by | KMW |
| Checked by | AJD |
| Approved by | AJD |

THIS LINE IS ONE INCH LONG WHEN PLOTTED AT FULL SCALE ON A 22" X 34" DRAWING

NAGOG POND WATER TREATMENT PLANT
TOWN OF CONCORD, MASSACHUSETTS
DOOR SCHEDULE

FOR PERMITTING
Sheet No.
A-5

Drawing file: C:\Users\leu\AppData\Local\Microsoft\Windows\Temporary Internet Files\Content.Outlook\773V3O4M\Schedules 11-13-15-d.dwg Plot Date: Nov 17,2015-12:48pm

## MECHANICAL PROCESS LEGEND

### VALVES, COUPLING, & APPURTENANCES

- BUTTERFLY VALVE
- CHECK VALVE
- EXPANSION JOINT
- KOH — CHEMICAL INJECTION LOCATION

### PIPE AND FITTINGS

DOUBLE LINE — SINGLE LINE

- PIPE
- ELBOW (90) — SIDE, UP, DOWN
- ELBOW (45) — SIDE, UP, DOWN
- TEE — SIDE, BRANCH DOWN, BRANCH UP, DOWN
- WYE
- CROSS
- RED (CONC)
- RED (ECC)
- FLANGE
- PIPE END
- PIPE BREAK

PIPE AND FITTING SYMBOLOGY SHOWN ABOVE IS FOR FLANGED DUCTILE IRON PIPE. SYMBOLOGY FOR OTHER PIPING SYSTEMS IS SIMILAR. END CONNECTIONS DENOTE JOINING TECHNOLOGY.

- MECHANICAL JOINT
- WELDED
- SOCKET WELD
- SINGLE LINE (JOINING TECHNOLOGY VARIES)

## LINETYPE LEGEND

- STRUCTURE – AT OR ABOVE GRADE
- STRUCTURE – BELOW GRADE
- PIPING – AT OR ABOVE GRADE
- PIPING – BELOW GRADE

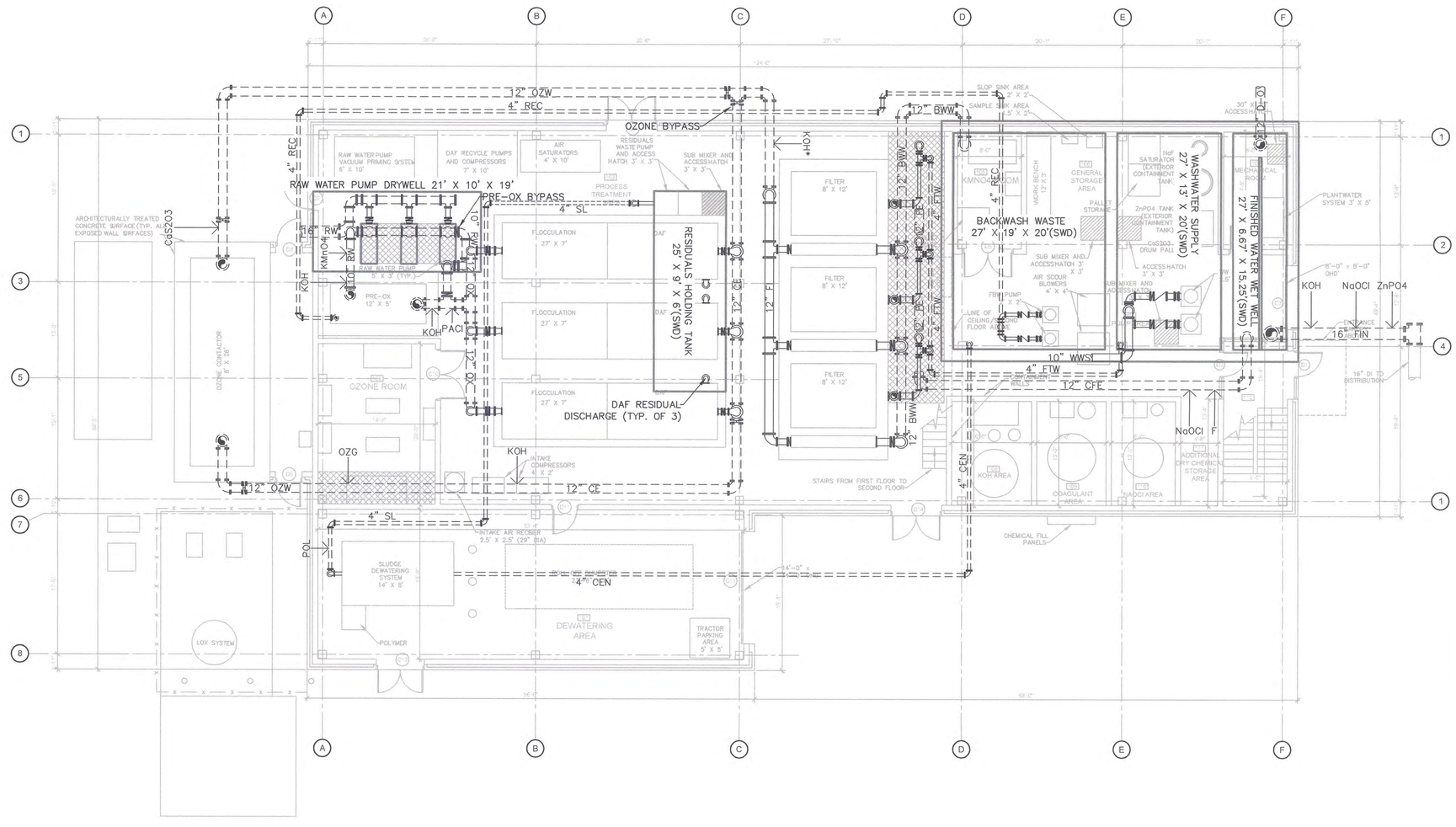


## PROCESS STREAM ABBREVIATIONS

| | |
|---|---|
| AS | AIR SCOUR |
| BWA | BACKWASH AIR |
| BWW | BACKWASH WASTE |
| CaS203 | CALCIUM THIOSULFATE |
| CE | CLARIFIER EFFLUENT |
| CEN | CENTRATE |
| CFE | COMBINED FILTER EFFLUENT |
| D–O | DRAIN, OVERFLOW |
| DAF | DISSOLVED AIR FLOTATION |
| DAFR | DAF RECYCLE |
| DR | DRAIN |
| F | FLUORIDE |
| FE | FILTER EFFLUENT |
| FI | FILTER INFLUENT |
| FTW | FILTER TO WASTE |
| FIN | FINISHED WATER |
| KMnO4 | POTASSIUM PERMANGANATE |
| KOH | POTASSIUM HYDROXIDE |
| LOX | LIQUID OXYGEN |
| NaOCl | SODIUM HYPOCHLORITE |
| OZG | OZONE GAS |
| OZO | OZONE OFF GAS |
| OZW | OZONATED WATER |
| PACl | POLYALUMINUM CHLORIDE |
| POL | POLYMER |
| PRE–OX | PER–OXIDATION |
| PSW | PLANT SERVICE WATER |
| REC | RECYCLE |
| RW | RAW WATER |
| SL | SLUDGE |
| SWD | SIDEWATER DEPTH |
| V | VENT |
| VG | VENT GAS |
| W1 | POTABLE WATER |
| W2 | NON–POTABLE WATER |
| WWS | WASH WATER SUPPLY |
| ZnPO4 | ZINC ORTHOPHOSPATE |

NOTES:

1. *PRE–FILTRATION KOH ONLY USED DURING OZONE SYSTEM BYPASS.

Drawing file: I:\Concord 200\200-1501 Nagog Pond WTP Conceptual Design\01 Conceptual Design\Drawings\CAD\mechanical plan.dwg Plot Date: Nov 16,2015-4:23pm

Environmental Partners GROUP — A partnership for engineering solutions.

LIN ASSOCIATES, INC. — CONSULTING ENGINEERS

DiMarinisi & Wolfe — ARCHITECTS • URBAN DESIGNERS — BOSTON, MASSACHUSETTS

| MARK | DATE | DESCRIPTION |
|---|---|---|
| | | |

| | |
|---|---|
| Scale | 1/8" = 1'-0" |
| Date | NOVEMBER 2015 |
| Job No. | 200-1501 |
| Designed by | DNRP |
| Drawn by | NJR |
| Checked by | DNRP |
| Approved by | SCO |

THIS LINE IS ONE INCH LONG WHEN PLOTTED AT FULL SCALE ON A 22" X 34" DRAWING

NAGOG POND WATER TREATMENT PLANT

TOWN OF CONCORD, MASSACHUSETTS

PROCESS MECHANICAL PIPING PLAN

FOR PERMITTING

Sheet No. M-1

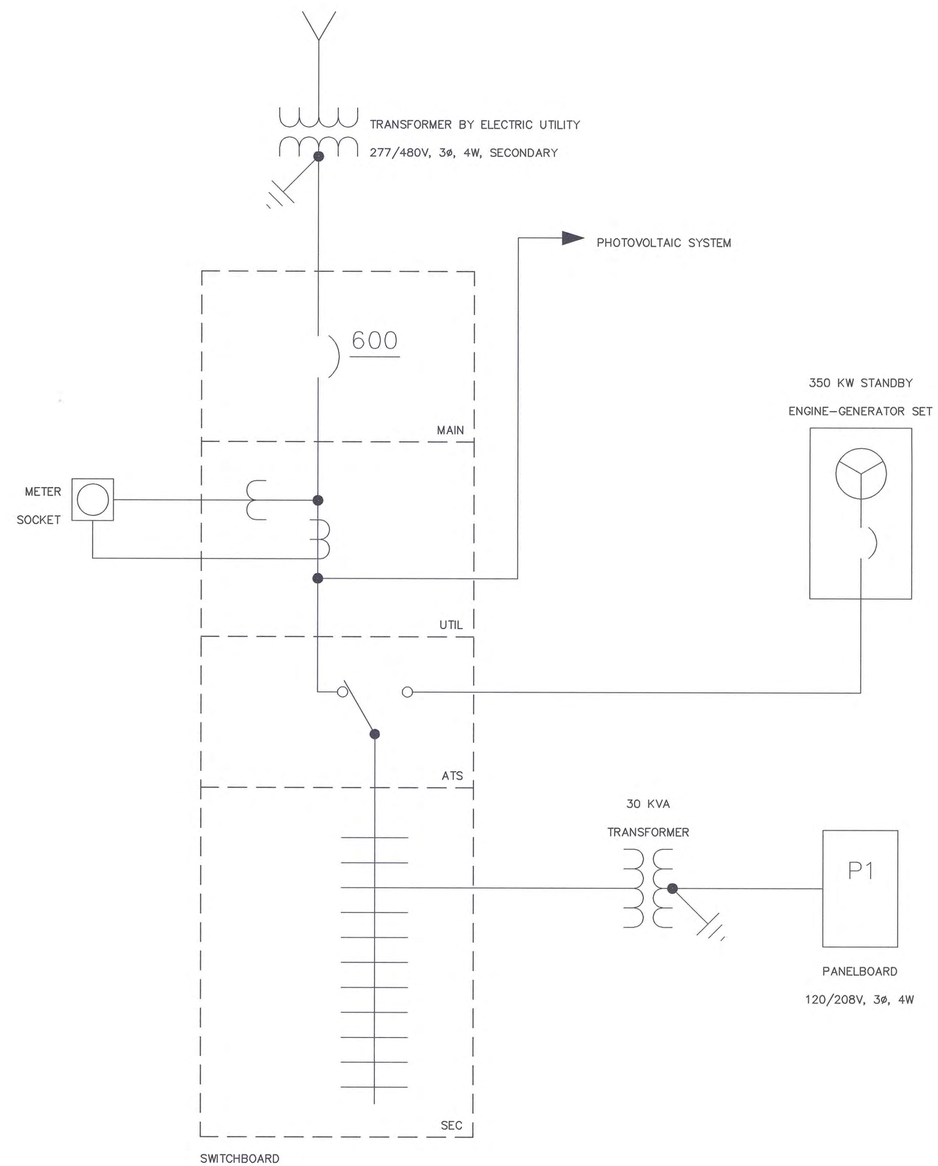


PRELIMINARY SINGLE LINE DIAGRAM

Environmental Partners GROUP
A partnership for engineering solutions.

LIN ASSOCIATES, INC.
CONSULTING ENGINEERS

DiMarinisi & Wolfe
ARCHITECTS • URBAN DESIGNERS
BOSTON, MASSACHUSETTS

| MARK | DATE | DESCRIPTION |
|---|---|---|

| | |
|---|---|
| Scale | AS NOTED |
| Date | NOVEMBER 2015 |
| Job No. | 200-1501 |
| Designed by | EBM, INC |
| Drawn by | EBM, INC |
| Checked by | DNRP |
| Approved by | SCO |

THIS LINE IS ONE INCH LONG WHEN PLOTTED AT FULL SCALE ON A 22" X 34" DRAWING

NAGOG POND WATER TREATMENT PLANT
TOWN OF CONCORD, MASSACHUSETTS

SINGLE LINE DIAGRAM

FOR PERMITTING

Sheet No.
E-1

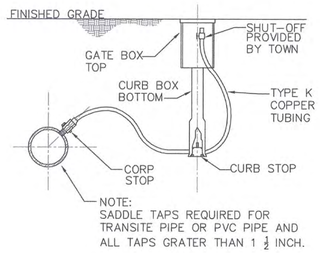


## BLOW OFF

SCALE: N.T.S.

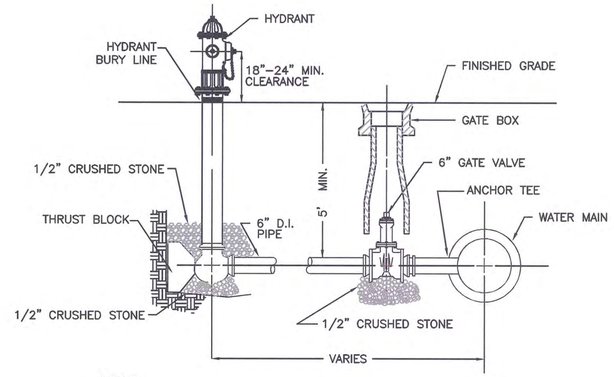


NOTES:

1. ALL HYDRANT, VALVE AND TEE JOINTS TO BE RESTRAINED MECHANICAL JOINTS.
2. DEPTH OF HYDRANT BURY SHALL SUIT INSTALLED DEPTH OF COVER OVER WATERMAIN. INSTALL RISERS AS NECESSARY AT NO ADDITIONAL COST TO THE OWNER.
3. VALVES SHALL OPEN LEFT (COUNTER–CLOCKWISE).

## HYDRANT ASSEMBLY DETAIL

N.T.S.

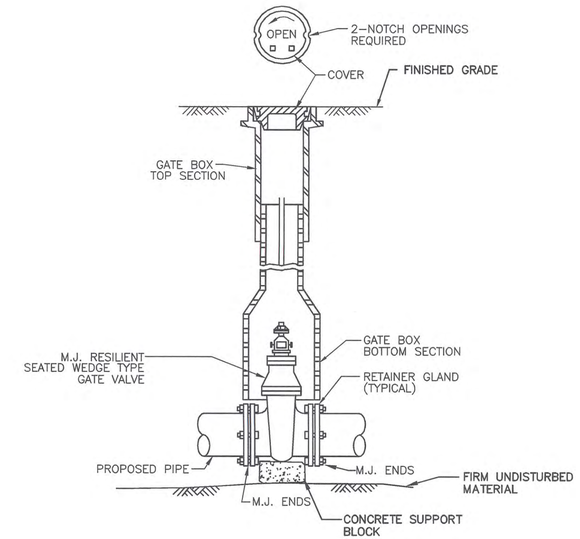


## GATE VALVE AND VALVE BOX DETAIL

N.T.S.

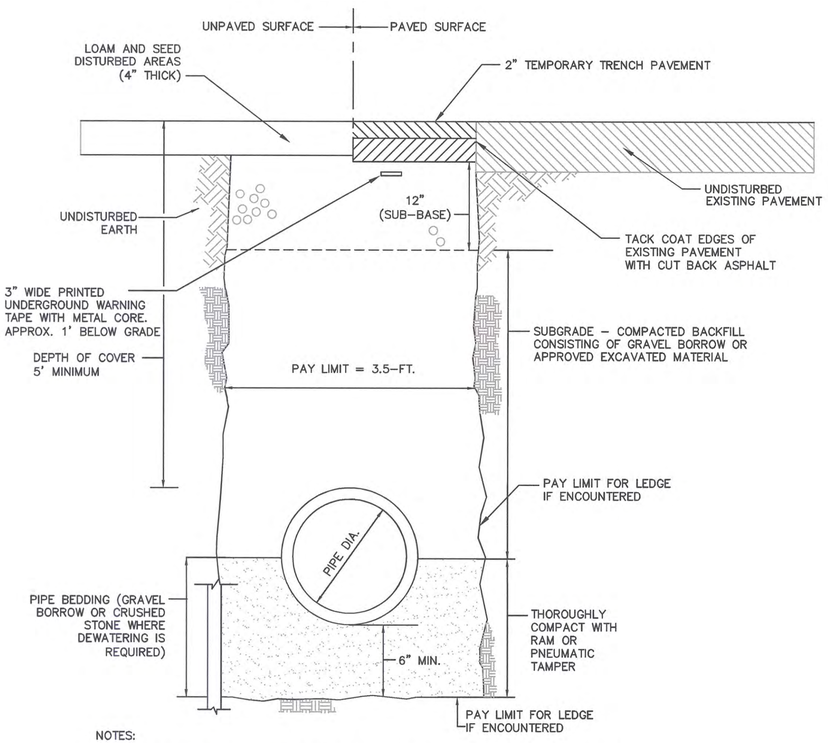


NOTES:

1. ANY GRASS AREAS DISTURBED SHALL BE GRADED, LOAMED TO A DEPTH OF 4 INCHES AND SEEDED, WHERE NO GRASS OCCURS USE 6" PROCESSED GRAVEL

## TYPICAL WATER MAIN TRENCH DETAIL

N.T.S.

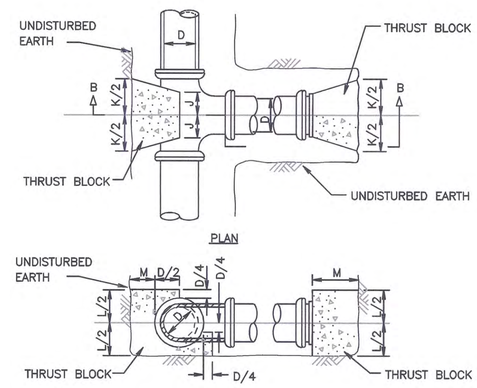


NOTES :

1. ALL CONCRETE SHALL BE 3000 PSI @ 28 DAYS (CLASS 'A' CONCRETE).
2. DIMENSIONS SHOWN ARE MINIMUM AND ARE BASED UPON SOIL PRESSURE OF 1500 PSF AND TOTAL PRESSURE OF 250 PSI. TOTAL PRESSURE IS WORKING PRESSURE PLUS SURGE PRESSURE.
3. THRUST BLOCKS SHALL BEAR AGAINST UNDISTURBED EARTH.

| TABLE OF DIMENSIONS | | | | | | |
|---|---|---|---|---|---|---|
| D (in) | 4 | 6 | 8 | 10 | 12 | 14 |
| J (in) | 6 | 6 | 7 | 9 | 10 | 12 |
| K (in) | 16 | 16 | 20 | 26 | 32 | 36 |
| L (in) | 16 | 16 | 21 | 24 | 29 | 34 |
| M (in) | 11 | 11 | 14 | 16 | 19 | 22 |

## CONCRETE THRUST BLOCK DETAIL AT TEE/PLUG

N.T.S.

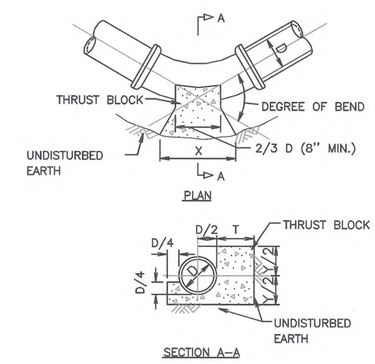


NOTES:

1. ALL CONCRETE SHALL BE 3000 P.S.I. @ 28 DAYS (CLASS "A" CONCRETE)
2. DIMENSIONS SHOWN ARE MINIMUM AND ARE BASED UPON SOIL PRESSURE OF 1500 P.S.F. AND TOTAL PRESSURE OF 250 P.S.I. TOTAL PRESSURE IS WORKING PRESSURE PLUS SURGE PRESSURE.
3. THRUST BLOCKS SHALL BEAR AGAINST UNDISTURBED EARTH.

TABLE OF DIMENSIONS

| DIMENSION | 90° BEND | | | | | | 45° BEND | | | | | | 22 1/2° BEND | | | | | | 11 1/4° BEND | | | | | |
|---|---|---|---|---|---|---|---|---|---|---|---|---|---|---|---|---|---|---|---|---|---|---|---|---|
| D (in.) | 4 | 6 | 8 | 10 | 12 | 14 | 4 | 6 | 8 | 10 | 12 | 14 | 4 | 6 | 8 | 10 | 12 | 14 | 4 | 6 | 8 | 10 | 12 | 14 |
| X (in.) | 35 | 35 | 50 | 56 | 72 | 80 | 24 | 24 | 35 | 45 | 51 | 60 | 28 | 28 | 30 | 32 | 37 | 42 | 12 | 12 | 19 | 21 | 27 | 33 |
| Y (in.) | 20 | 20 | 24 | 32 | 35 | 40 | 16 | 16 | 19 | 21 | 27 | 33 | 13 | 13 | 13 | 16 | 19 | 22 | 8 | 8 | 9 | 12 | 13 | 16 |
| T (in.) | 11 | 11 | 14 | 16 | 19 | 22 | 11 | 11 | 14 | 16 | 19 | 22 | 11 | 11 | 13 | 16 | 19 | 22 | 11 | 11 | 13 | 16 | 19 | 22 |

## CONCRETE THRUST BLOCK DETAIL AT BEND

N.T.S.

Drawing file: I:\Concord 200\200-1501 Nagog Pond WTP Conceptual Design\01 Conceptual Design\Drawings\CAD\Detail Sheets.dwg Plot Date: Nov 16,2015-5:20pm

Environmental Partners GROUP
A partnership for engineering solutions.

LIN ASSOCIATES, INC.
CONSULTING ENGINEERS

DiMarinisi & Wolfe
ARCHITECTS • URBAN DESIGNERS
BOSTON, MASSACHUSETTS

COMMONWEALTH OF MASSACHUSETTS STEPHEN C. OLSON CIVIL No. 39434 REGISTERED PROFESSIONAL ENGINEER 11/18/15

| MARK | DATE | DESCRIPTION |
|---|---|---|

| | |
|---|---|
| Scale | AS SHOWN |
| Date | NOVEMBER 2015 |
| Job No. | 200-1501 |
| Designed by | XXX |
| Drawn by | XXX |
| Checked by | SCO |
| Approved by | SCO |

THIS LINE IS ONE INCH LONG WHEN PLOTTED AT FULL SCALE ON A 22" X 34" DRAWING

NAGOG POND WATER TREATMENT PLANT

TOWN OF CONCORD, MASSACHUSETTS

CIVIL DETAILS I

FOR PERMITTING

Sheet No.

CD-1

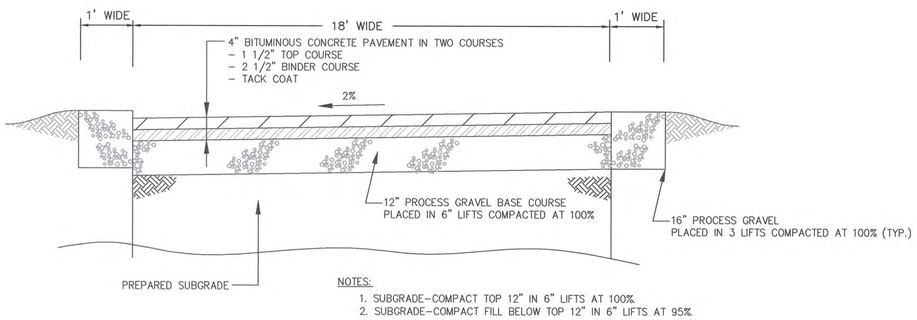


NOTES:
1. SUBGRADE–COMPACT TOP 12" IN 6" LIFTS AT 100%.
2. SUBGRADE–COMPACT FILL BELOW TOP 12" IN 6" LIFTS AT 95%.

## ACCESS ROAD PAVING DETAIL
N.T.S.

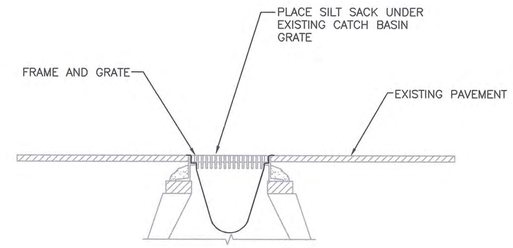


NOTES:
1. SILT SACKS SHALL BE INSPECTED WEEKLY AND ACCUMULATED SILT REMOVED TO ALLOW CATCH BASIN TO FUNCTION PROPERLY.
2. SILT SACK AS MANUFACTURED BY ACF ENVIRONMENTAL (800–448–3636) OR APPROVED EQUAL.

## SEDIMENTATION CONTROL AT CATCH BASINS, SILT SACKS
N.T.S.

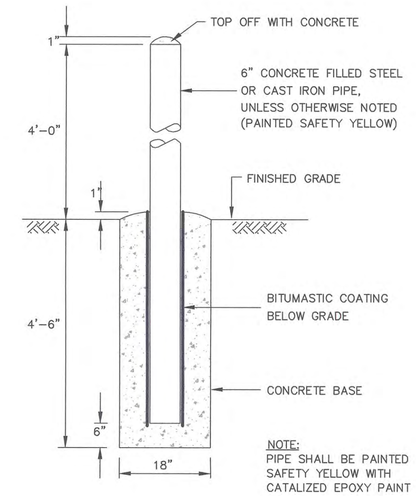


## CONCRETE BOLLARD DETAIL
N.T.S.

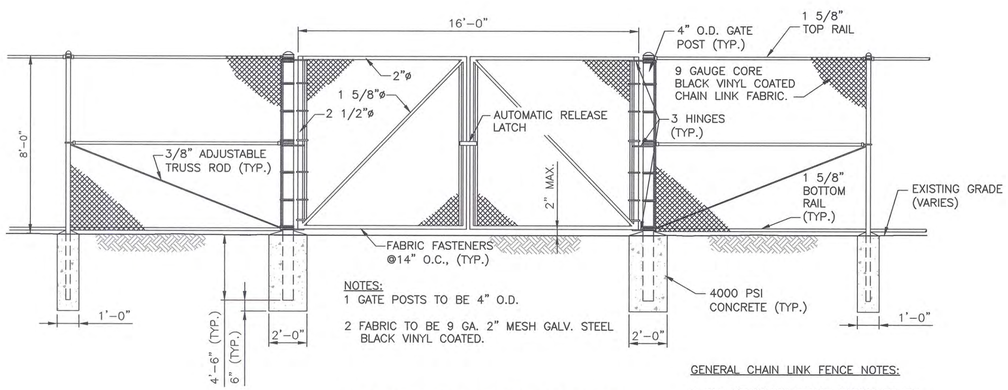


NOTES:
1 GATE POSTS TO BE 4" O.D.
2 FABRIC TO BE 9 GA. 2" MESH GALV. STEEL BLACK VINYL COATED.

## 8' WIDE DOUBLE SWING GATE
N.T.S.

GENERAL CHAIN LINK FENCE NOTES:
1. ALL CHAINLINK FENCE FABRIC TO BE KNUCKLED (TOP AND BOTTOM).
2. ALL CHAIN LINK FENCE POSTS, FABRIC, TIES AND MATERIALS SHALL BE BLACK VINYL COATED.
3. ALL SECTIONS INCLUDE BOTTOM RAIL.
4. BOTTOM RAIL TO BE 6" FROM FINISHED GRADE IN PV AREA AND 2" FROM FINISHED GRADE IN ALL OTHER AREAS.

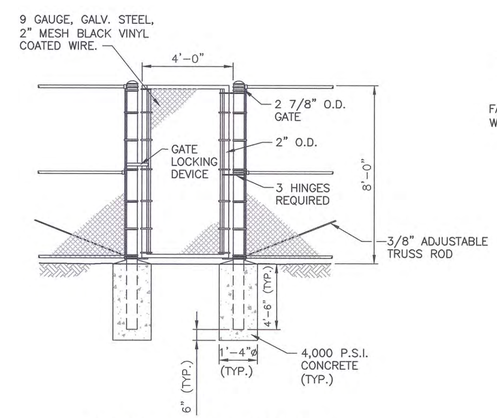


## 4' WIDE PEDESTRIAN GATE
N.T.S.

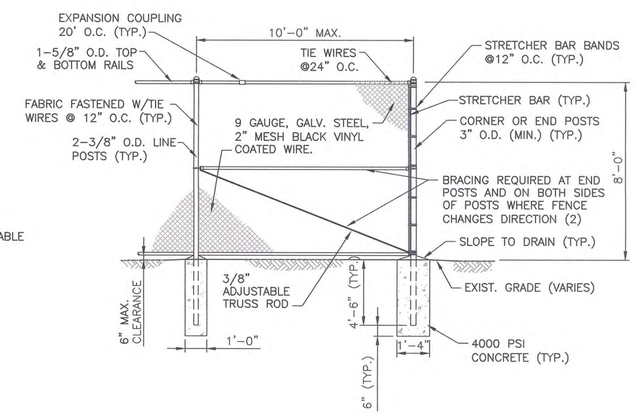


## 8' HIGH FENCE DETAIL
N.T.S.

Drawing file: I:\Concord 200\200-1501 Nagog Pond WTP Conceptual Design\01 Conceptual Design\Drawings\CAD\Detail Sheets.dwg Plot Date: Nov 17 2015-1:54pm

Environmental Partners GROUP
A partnership for engineering solutions.

LIN ASSOCIATES, INC.
CONSULTING ENGINEERS

DiMarinisi & Wolfe
ARCHITECTS • URBAN DESIGNERS
BOSTON, MASSACHUSETTS

COMMONWEALTH OF MASSACHUSETTS
STEPHEN C. OLSON
CIVIL
No. 35143
REGISTERED PROFESSIONAL ENGINEER
11/13/15

| MARK | DATE | DESCRIPTION |
|---|---|---|
| | | |

| | |
|---|---|
| Scale | AS SHOWN |
| Date | NOVEMBER 2015 |
| Job No. | 200-1501 |
| Designed by | XXX |
| Drawn by | XXX |
| Checked by | SCO |
| Approved by | SCO |

THIS LINE IS ONE INCH LONG WHEN PLOTTED AT FULL SCALE ON A 22" X 34" DRAWING

NAGOG POND WATER TREATMENT PLANT

TOWN OF CONCORD, MASSACHUSETTS

CIVIL DETAILS II

FOR PERMITTING

Sheet No.
CD-2

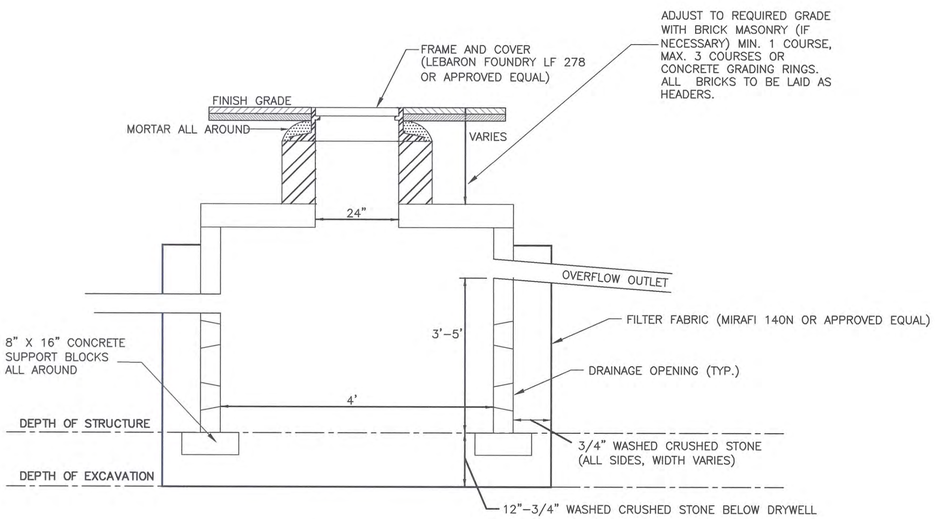


## 4'Ø PRECAST DRYWELL (PROFILE VIEW)

N.T.S.

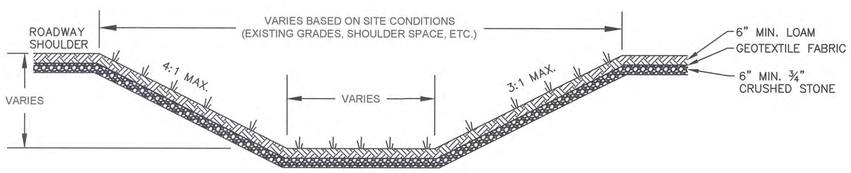


NOTE:
THE GOAL IS TO RETROFIT A VEGETATED SWALE WITHIN THE ROADWAY SHOULDER THAT WILL CONVEY STORMWATER FROM THE HIGH POINT NEAR THE CATCH BASIN/GUTTER INLET TO THE LOW POINT NEAR THE WETLAND AREA.

## VEGETATED BACKUP/OVERFLOW SWALE

N.T.S.

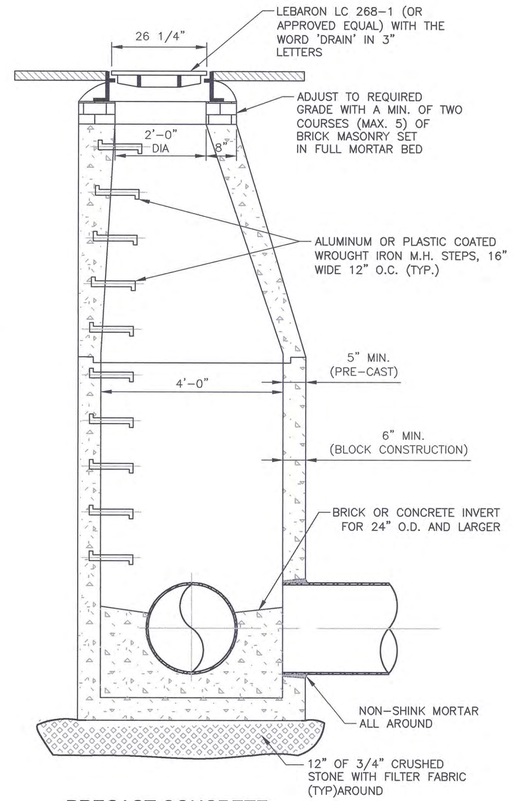


## PRECAST CONCRETE DRAIN MANHOLE

N.T.S.

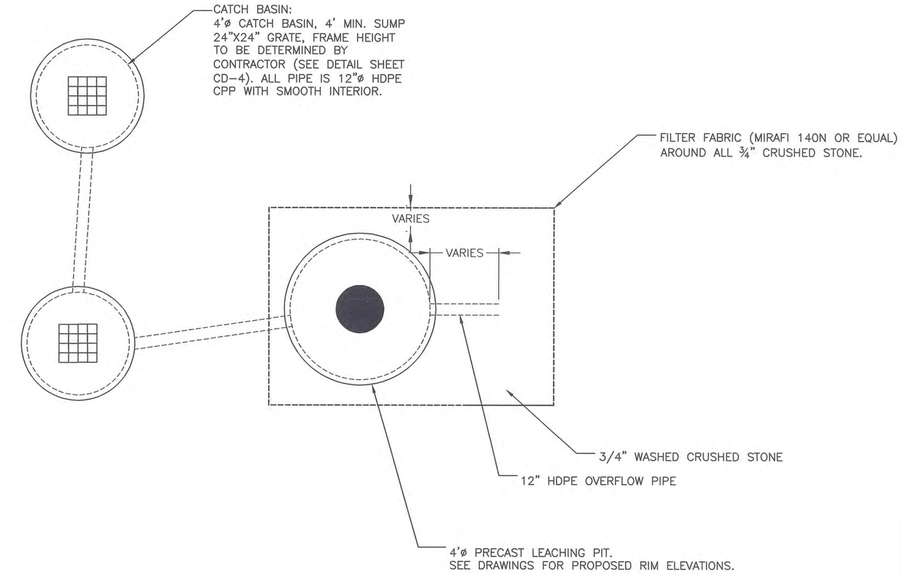


## 4'Ø PRECAST CONCRETE LEACHING PIT (PLAN VIEW)

N.T.S.

LEACHING PIT NOTES:
1. LEACHING PITS SHALL HAVE NO BOTTOM
2. CONCRETE MINIMUM STRENGTH: 4,000 P.S.I. @ 28 DAYS
3. STEEL REINFORCEMENT: ASTM A-615, GRADE 60, 1" MIN. COVER.
4. DESIGN LOADING: AASHTO HS20-44.
5. THE NUMBER OF LEACHING PITS, DEPTH OF ¾" CRUSHED STONE BELOW, AND WIDTH OF ¾" CRUSHED STONE AROUND VARY. SEE DRAWINGS AND LEACHING PIT CHART FOR DETAILS.
6. DETAILS SHOWN ARE GENERAL. REFER TO DRAWINGS FOR DETAILED DESIGN.
7. DUE TO THE LOCATION OF THE EXISTING UTILITIES, GUTTER INLETS (GI) AND CATCH BASIN MANHOLES (CBMH) WILL BE USED IN SOME AREAS, IN LIEU OF CATCH BASINS (CB). SEE DRAWINGS FOR DETAILED DESIGN

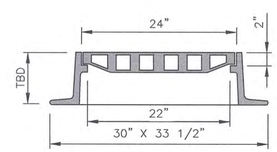


NOTES:
1. CATCH BASIN FRAME SHALL BE ej FRAME 5523, ej FRAME 5524 OR APPROVED EQUAL.
2. CATCH BASIN GRATE SHALL BE ej GRATE 5520,5 OR APPROVED EQUAL.
3. CATCH BASIN DOUBLE FRAMES SHALL BE ej FRAME 5448ZPT OR APPROVED EQUAL.
3. FRAME AND GRATE SHALL BE SET IN FULL BED OF MORTAR ON A MINIMUM OF TWO COURSES OF BRICK.
4. FRAME HEIGHT TO BE DETERMINED BY CONTRACTOR.

## STANDARD CATCH BASIN FRAME AND GRATE

N.T.S.

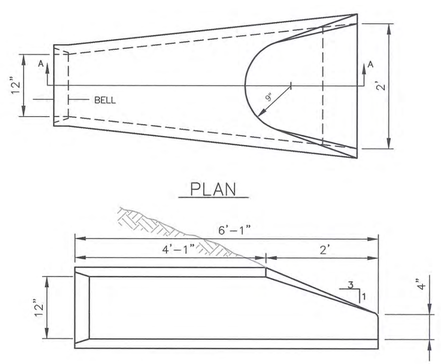


## FLARED END DETAIL

N.T.S.

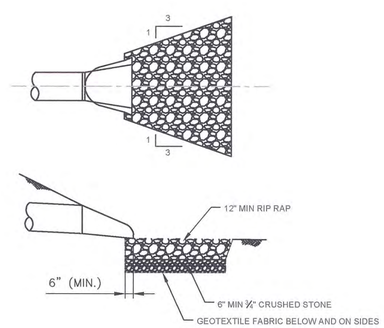


## RIP RAP FOR OVERFLOW DETAIL

N.T.S.

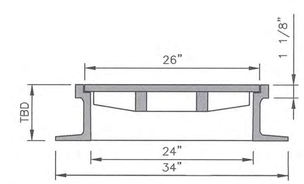


NOTES:
1. FRAME SHALL BE ej FRAME 2114Z OR APPROVED EQUAL.
2. COVER SHALL BE ej COVER 2110A1 OR APPROVED EQUAL.
3. EACH COVER SHALL READ DRAIN IN 3" LETTERING.
4. FRAME AND COVER SHALL BE SET IN FULL BED OF MORTAR.
5. FRAME HEIGHT TO BE DETERMINED BY CONTRACTOR.

## STANDARD DRAIN MANHOLE FRAME AND COVER

N.T.S.

Environmental Partners GROUP
A partnership for engineering solutions.

LIN ASSOCIATES, INC.
CONSULTING ENGINEERS

DiMarinisi & Wolfe
ARCHITECTS • URBAN DESIGNERS
BOSTON, MASSACHUSETTS

| MARK | DATE | DESCRIPTION |
|---|---|---|
| | | |

| | |
|---|---|
| Scale | AS SHOWN |
| Date | NOVEMBER 2015 |
| Job No. | 200-1501 |
| Designed by | XXX |
| Drawn by | XXX |
| Checked by | SCO |
| Approved by | SCO |

THIS LINE IS ONE INCH LONG WHEN PLOTTED AT FULL SCALE ON A 22" X 34" DRAWING

NAGOG POND WATER TREATMENT PLANT

TOWN OF CONCORD, MASSACHUSETTS

CIVIL DETAILS III

FOR PERMITTING

Sheet No.

CD-3

Drawing file: I:\Concord.200\200-1501 Nagog Pond WTP Conceptual Design\01 Conceptual Design\Drawings\CAD\Detail Sheets.dwg Plot Date: Nov 16,2015-5:21pm

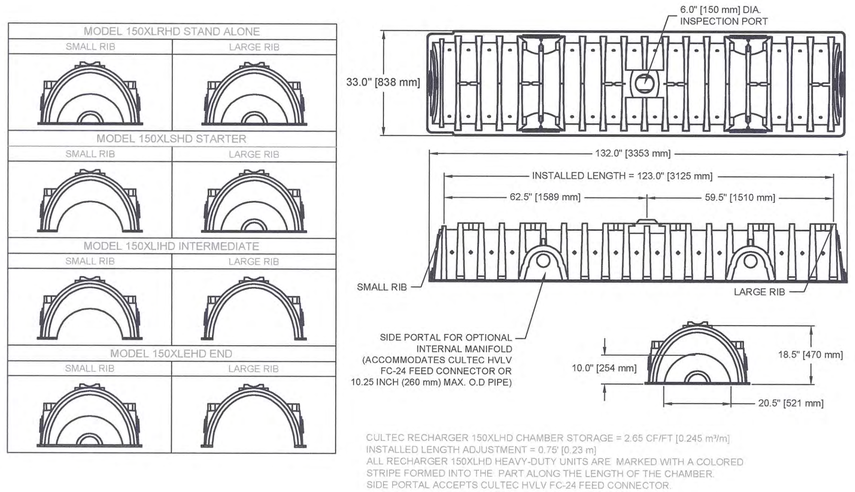


## CULTEC RECHARGER 150XLHD HEAVY DUTY THREE VIEW

N.T.S.

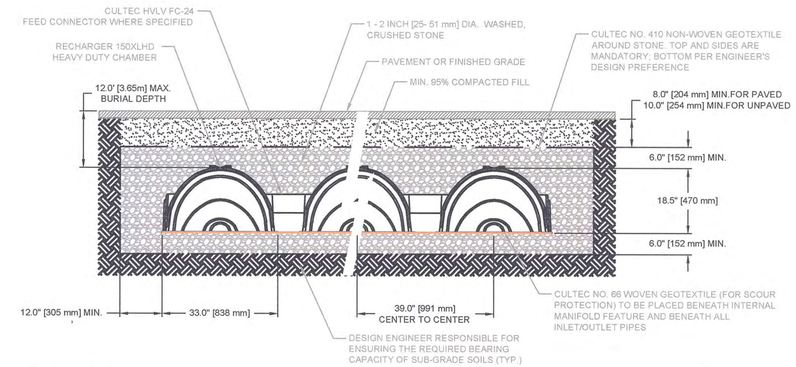


**GENERAL NOTES**

RECHARGER 150XLHD BY CULTEC, INC. OF BROOKFIELD, CT.
STORAGE PROVIDED = 4.89 CF/FT (0.45 m³/m) PER DESIGN UNIT.
REFER TO CULTEC, INC.'S CURRENT RECOMMENDED INSTALLATION GUIDELINES.
MAXIMUM ALLOWED COVER OVER TOP OF UNIT SHALL BE 12 '(3.65m).
THE CHAMBER WILL BE DESIGNED TO WITHSTAND TRAFFIC LOADS WHEN INSTALLED ACCORDING TO CULTEC'S RECOMMENDED INSTALLATION INSTRUCTIONS.

ALL RECHARGER 150XLHD HEAVY DUTY UNITS ARE MARKED WITH A COLORED STRIPE FORMED INTO THE PART ALONG THE LENGTH OF THE CHAMBER.
ALL RECHARGER 150XLHD CHAMBERS MUST BE INSTALLED IN ACCORDANCE WITH ALL APPLICABLE LOCAL, STATE AND FEDERAL REGULATIONS.

## CULTEC RECHARGER 150XLHD HEAVY DUTY TYPICAL CROSS SECTION

N.T.S.

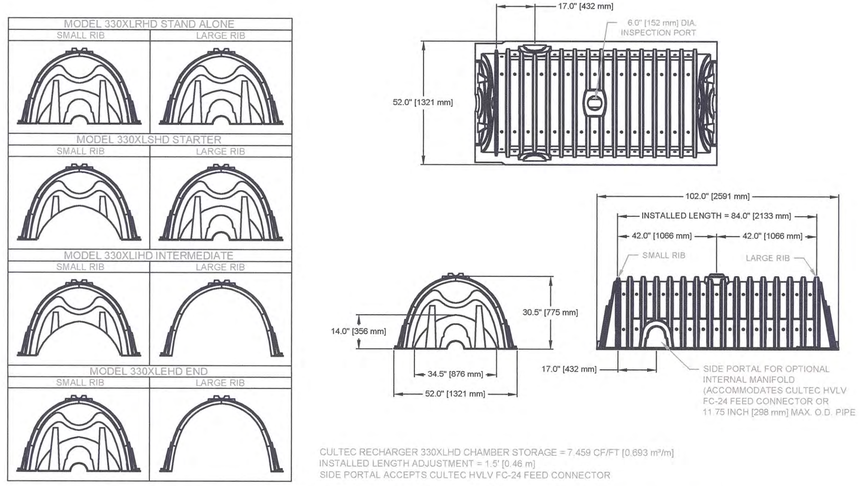


## CULTEC RECHARGER 330XLHD HEAVY DUTY TYPICAL THREE VIEW

N.T.S.

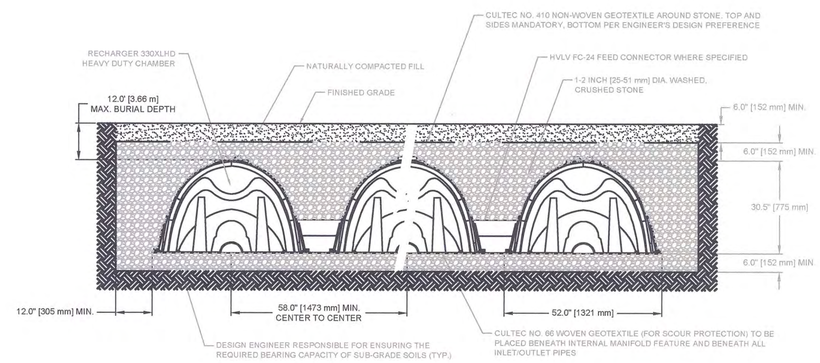


**GENERAL NOTES**

RECHARGER 330XL HD BY CULTEC, INC. OF BROOKFIELD, CT.
STORAGE PROVIDED = 11.32 CF/FT [1.05 m³/m] PER DESIGN UNIT.
REFER TO CULTEC, INC.'S CURRENT RECOMMENDED INSTALLATION GUIDELINES.
THE CHAMBER WILL BE DESIGNED TO WITHSTAND TRAFFIC LOADS WHEN INSTALLED ACCORDING TO CULTEC'S RECOMMENDED INSTALLATION INSTRUCTIONS

ALL RECHARGER 330XL HD HEAVY DUTY UNITS ARE MARKED WITH A COLOR STRIPE FORMED INTO THE PART ALONG THE LENGTH OF THE CHAMBER.
ALL RECHARGER 330XL HD CHAMBERS MUST BE INSTALLED IN ACCORDANCE WITH ALL APPLICABLE LOCAL, STATE AND FEDERAL REGULATIONS

## CULTEC RECHARGER 330XLHD HEAVY DUTY TYPICAL CROSS SECTION

N.T.S.

Drawing file: I:\Concord 200\200-1501 Nagog Pond WTP Conceptual Design\01 Conceptual Design\Drawings\CAD\Detail Sheets.dwg Plot Date: Nov 16,2015-5:22pm

Environmental Partners GROUP
A partnership for engineering solutions.

LIN ASSOCIATES, INC.
CONSULTING ENGINEERS

DiMarinisi & Wolfe
ARCHITECTS • URBAN DESIGNERS
BOSTON, MASSACHUSETTS

COMMONWEALTH OF MASSACHUSETTS STEPHEN C. OLSON CIVIL No. 30146 REGISTERED PROFESSIONAL ENGINEER 11/16/15

| MARK | DATE | DESCRIPTION |
|---|---|---|
| | | |

| | |
|---|---|
| Scale | AS SHOWN |
| Date | NOVEMBER 2015 |
| Job No. | 200-1501 |
| Designed by | XXX |
| Drawn by | XXX |
| Checked by | SCO |
| Approved by | SCO |

THIS LINE IS ONE INCH LONG WHEN PLOTTED AT FULL SCALE ON A 22" X 34" DRAWING

NAGOG POND WATER TREATMENT PLANT
TOWN OF CONCORD, MASSACHUSETTS
CIVIL DETAILS IV

FOR PERMITTING
Sheet No.
CD-4

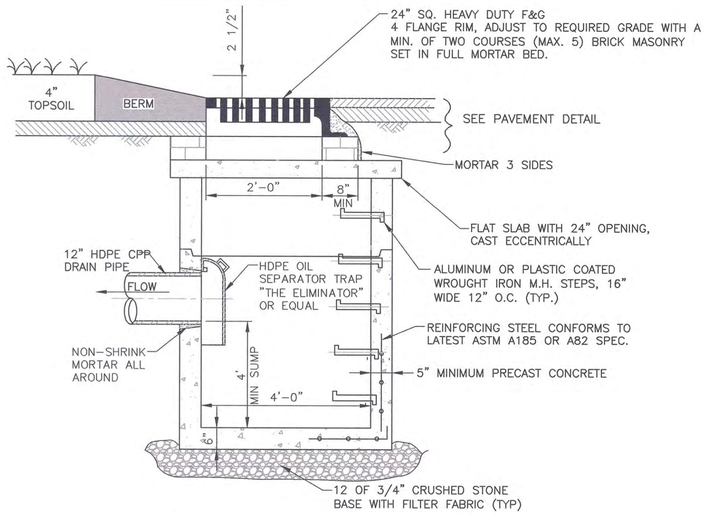


NOTES:
1. MANHOLE DESIGN TO CONFORM TO LATEST ASTM C478 SPEC. FOR "PRECAST REINFORCED CONCRETE MANHOLE SECTIONS."
2. USE SPECIAL 4" F&G WHERE REQUIRED.

## PRECAST CONCRETE CATCH BASIN / CB MANHOLE

N.T.S.

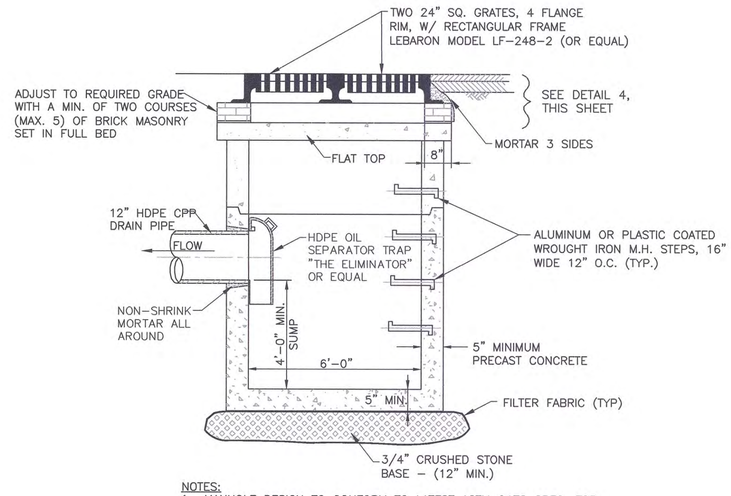


NOTES:
1. MANHOLE DESIGN TO CONFORM TO LATEST ASTM C478 SPEC. FOR "PRECAST REINFORCED CONCRETE MANHOLE SECTIONS."
2. USE SPECIAL 4" F&G WHERE REQUIRED.

## PRECAST CONCRETE DOUBLE CATCH BASIN

N.T.S.

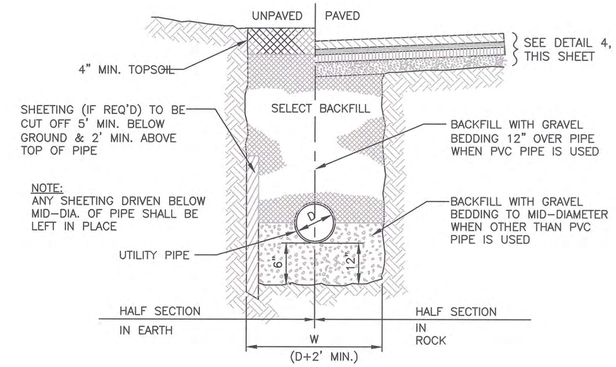


## TYPICAL DRAIN UTILITY TRENCH

N.T.S.

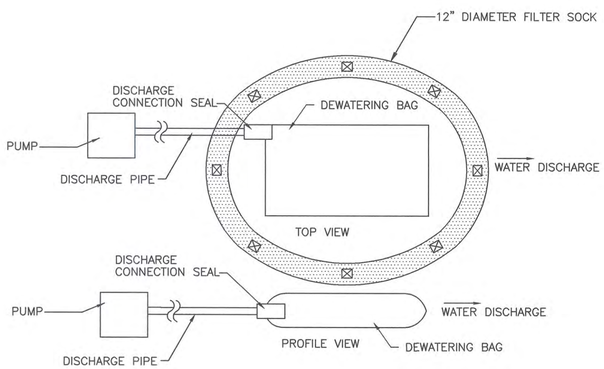


NOTES:

1. DEWATERING BAG SIZE AND QUANTITY SHALL BE AS NEEDED TO ADEQUATELY FILTER ALL PUMP EFFLUENT FROM DEWATERING ACTIVITIES. CONTRACTOR SHALL PROVIDE A REDUNDANT BAG ON SITE AT ALL TIMES.
2. EACH BAG SHALL HANDLE A 2", 3", OR 4" DISCHARGE HOSE.
3. DISCHARGE HOSES CAN BE PLACED ALONG ANY EDGE BY MAKING A SMALL INCISION INTO THE FABRIC, INSERTING THE HOSE, AND THEN CLAMPING THE FABRIC TO THE HOSE VIA WIRE, TIES, CLAMP, ROPE OR SIMILAR TO CREATE A GOOD SEAL.
4. CONTRACTOR SHALL AVOID DISCHARGING MULTIPLE PIPES INTO ONE BAG.

## DEWATERING BAGS

N.T.S.

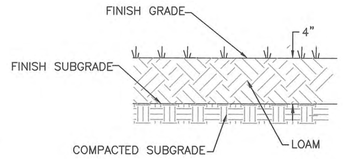


NOTE:

INSTALL CURLEX I EROSION CONTROL BLANKET AS MANUFACTURED BY AMERICAN EXCELSIOR COMPANY (OR APPROVED EQUAL) ON ALL LOAM AND SEEDED SLOPES 3:1 OR STEEPER.

## LOAM AND SEED (DISTURBED AREAS)

N.T.S.

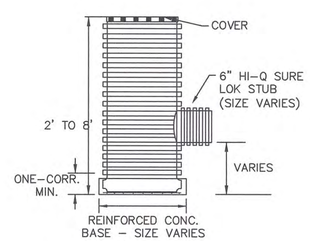


## ROOF DRAIN ACCESS CLEANOUT

N.T.S.

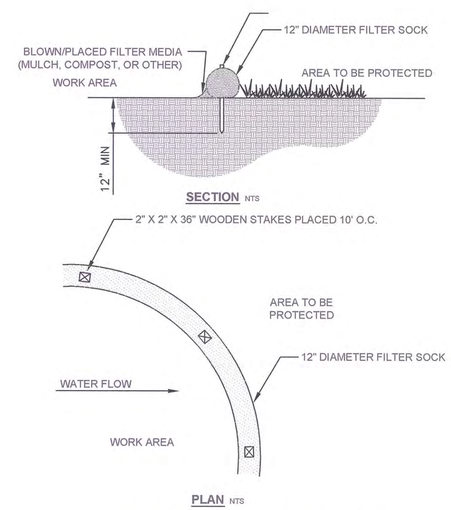


## 12" DIAMETER FILTER SOCK

N.T.S.

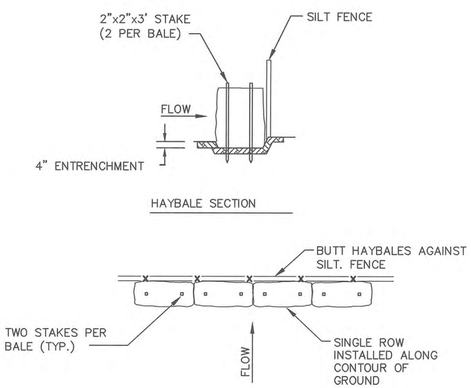


NOTES:

1. BALES SHALL BE PLACED IN A ROW WITH THE ENDS TIGHTLY ABUTTING THE ADJACENT BALES.
2. EACH BALE SHALL BE EMBEDDED IN THE SOIL A MINIMUM OF 4".
3. BALES SHALL BE SECURELY ANCHORED IN PLACE BY STAKES DRIVEN THROUGH THE BALES. THE FIRST WOODEN STAKE IN EACH BALE SHALL BE ANGLED TOWARD THE PREVIOUSLY LAID BALE TO FORCE BALES TOGETHER.
4. INSPECTION SHALL BE FREQUENT AND REPAIR OF REPLACEMENT SHALL BE MADE PROMPTLY AS NEEDED.
5. BALES SHALL BE REMOVED AND REPLACED WHEN THEY BECOME FILLED WITH SEDIMENT AND BLOCK OR IMPEDE STORM FLOW OR DRAINAGE.
6. BALES SHALL BE REMOVED WHEN THE EMBANKMENTS STABILIZE.

## HAY BALES AND SILT FENCE DETAIL

N.T.S.

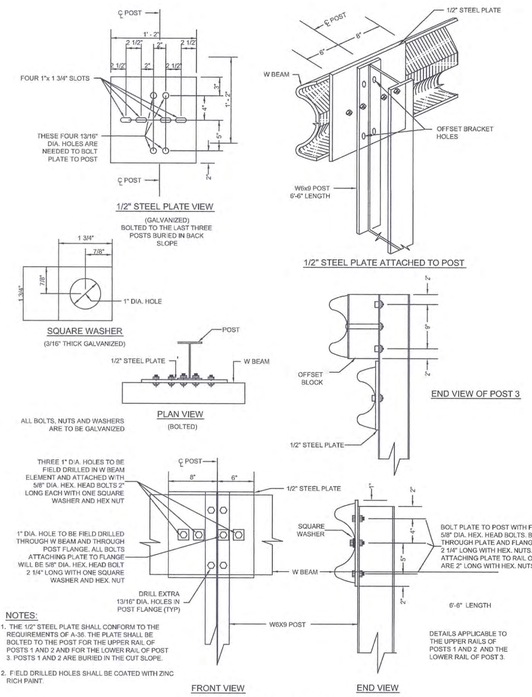


NOTES:

1. THE 1/2" STEEL PLATE SHALL CONFORM TO THE REQUIREMENTS OF A-36. THE PLATE SHALL BE BOLTED TO THE POST FOR THE UPPER RAIL OF POSTS 1 AND 2 AND FOR THE LOWER RAIL OF POST 3. POSTS 1 AND 2 ARE BURIED IN THE CUT SLOPE.
2. F.IELD DRILLED HOLES SHALL BE COATED WITH ZINC RICH PAINT.

## MASSDOT STANDARD GUARDRAIL DETAILS

N.T.S.

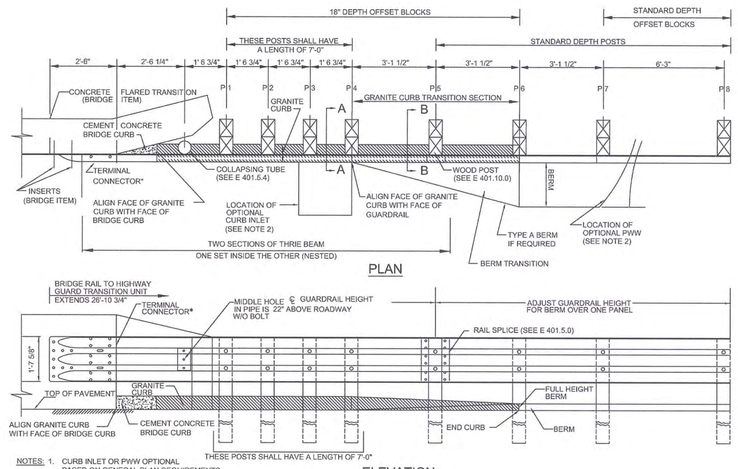


NOTES:

1. CURB INLET OR PWW OPTIONAL BASED ON GENERAL PLAN REQUIREMENTS
2. FOR SECTIONS A-A AND B-B, SEE E 401.5.2
3. THRIE BEAM TO W BEAM TRANSITION RAIL (SEE E401.6.1) IS TYPICALLY PLACED OUTSIDE BRIDGE RAIL TO HIGHWAY GUARD TRANSITION UNIT LENGTH, (26'-10 3/4") AT OR BEYOND POST P8.
4. TRANSITION FROM THRIE BEAM IS ALLOWED FROM P5 TO P7 IF REQUIRED BY SITE CONSTRAINTS. PAYMENT FOR THE TRANSITION ELEMENT IS INCLUDED IN THIS ITEM IN THAT CASE.

*SEE E 401.5.3 FOR TERMINAL CONNECTOR DIMENSIONS AND DETAILS

## MASSDOT STANDARD GUARDRAIL PROFILE VIEW

N.T.S.

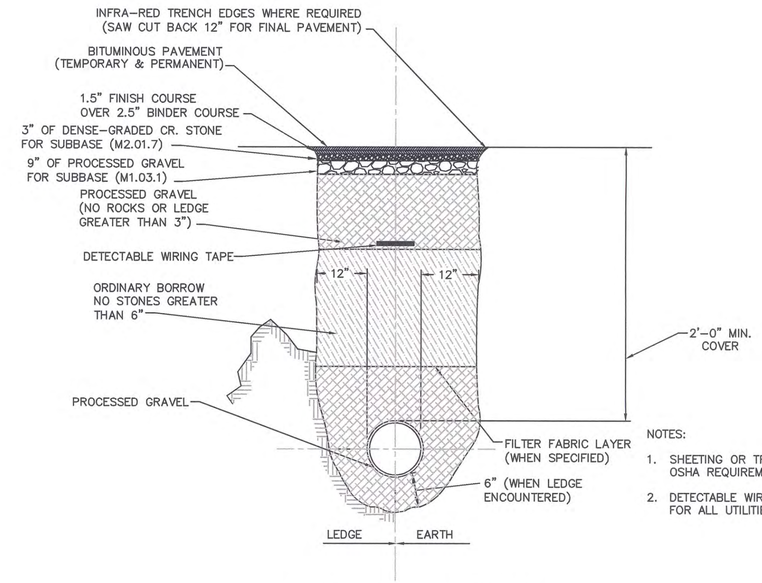


NOTES:

1. SHEETING OR TRENCH BOXES PER OSHA REQUIREMENTS.
2. DETECTABLE WIRING TAPE REQUIRED FOR ALL UTILITIES.

## TYPICAL GAS TRENCH DETAIL

N.T.S.

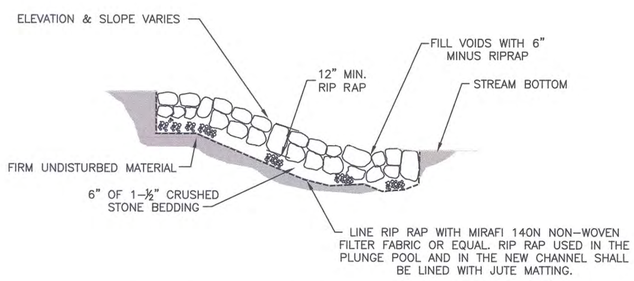


NOTE: RIPRAP SHALL CONFORM TO MASS DOT STANDARD SPECIFICATION M2.02.3.

## RIP RAP DETAIL

N.T.S.

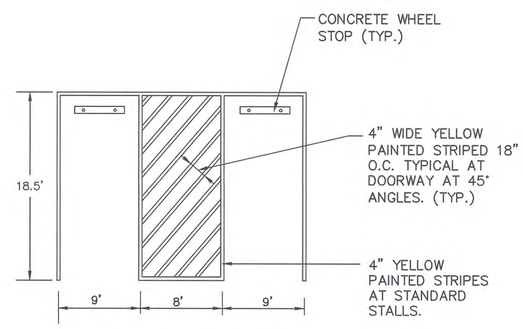


## PARKING SPOT SPACING

N.T.S.

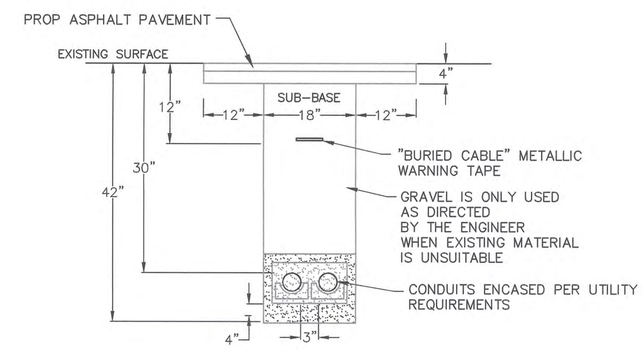


## ELECTRIC/CABLE CONDUIT DETAIL

N.T.S.

Environmental Partners GROUP
A partnership for engineering solutions.

LIN ASSOCIATES, INC.
CONSULTING ENGINEERS

DiMarinisi & Wolfe
ARCHITECTS • URBAN DESIGNERS
BOSTON, MASSACHUSETTS

| MARK | DATE | DESCRIPTION |
|---|---|---|
| | | |

| | |
|---|---|
| Scale | AS SHOWN |
| Date | NOVEMBER 2015 |
| Job No. | 200-1501 |
| Designed by | XXX |
| Drawn by | XXX |
| Checked by | SCO |
| Approved by | SCO |

THIS LINE IS ONE INCH LONG WHEN PLOTTED AT FULL SCALE ON A 22" X 34" DRAWING

NAGOG POND WATER TREATMENT PLANT

TOWN OF CONCORD, MASSACHUSETTS

CIVIL DETAILS VI

FOR PERMITTING

Sheet No.

CD-6

Drawing file: I:\Concord 200\200-1501 Nagog Pond WTP Conceptual Design\01 Conceptual Design\Drawings\CAD\Detail Sheets.dwg Plot Date: Nov 16,2015-5:23pm

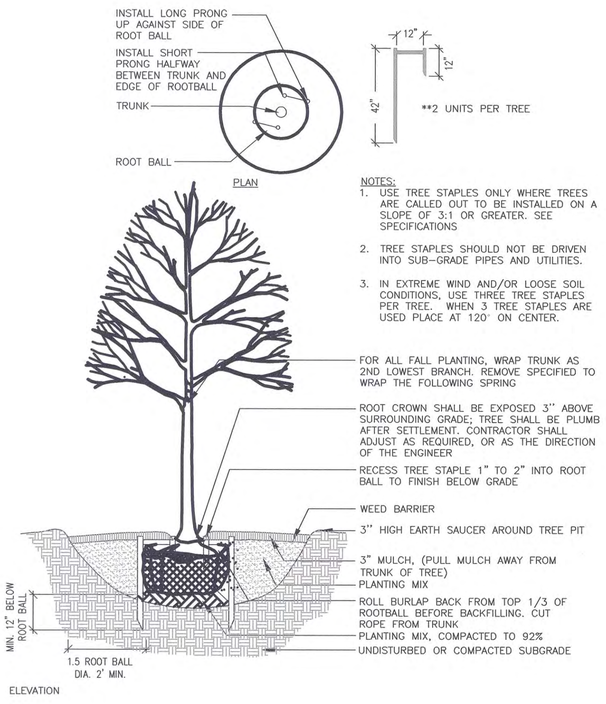


NOTES:
1. USE TREE STAPLES ONLY WHERE TREES ARE CALLED OUT TO BE INSTALLED ON A SLOPE OF 3:1 OR GREATER. SEE SPECIFICATIONS
2. TREE STAPLES SHOULD NOT BE DRIVEN INTO SUB-GRADE PIPES AND UTILITIES.
3. IN EXTREME WIND AND/OR LOOSE SOIL CONDITIONS, USE THREE TREE STAPLES PER TREE. WHEN 3 TREE STAPLES ARE USED PLACE AT 120° ON CENTER.

## TREE STAPLE DETAIL FOR TREES PLANTED ON SLOPE

N.T.S.

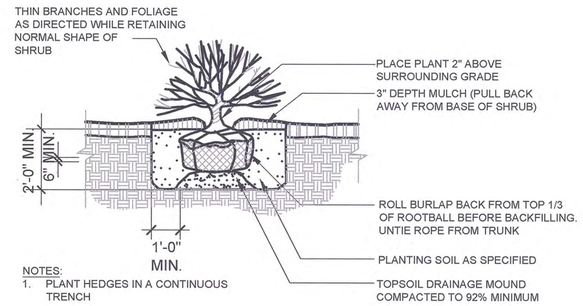


NOTES:
1. PLANT HEDGES IN A CONTINUOUS TRENCH

## SHRUB PLANTING DETAIL

N.T.S.

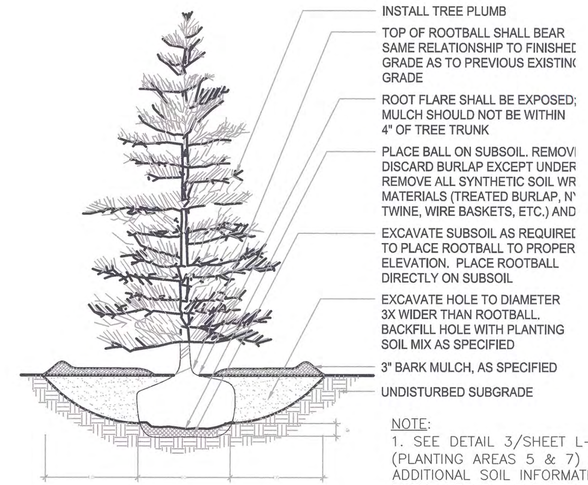


NOTE:
1. SEE DETAIL 3/SHEET L-3 & L-5 (PLANTING AREAS 5 & 7) FOR ADDITIONAL SOIL INFORMATION. IN THESE AREAS, HOLE FOR ROOTBALL SHALL BE INCREASED TO 4 TIMES ROOTBALL WIDTH

## EVERGREEN TREE PLANTING DETAIL

N.T.S.

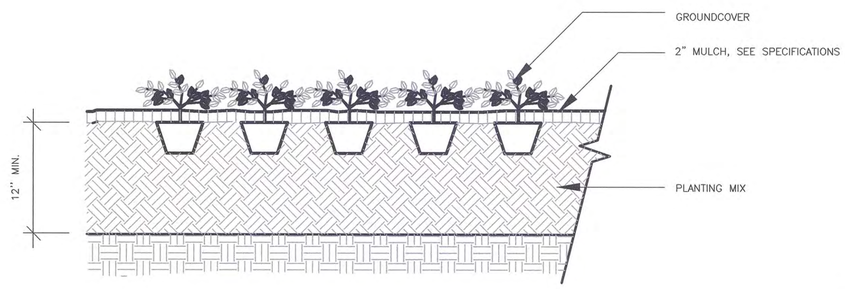


## GROUND COVER/ PERENNIAL PLANTING

N.T.S.

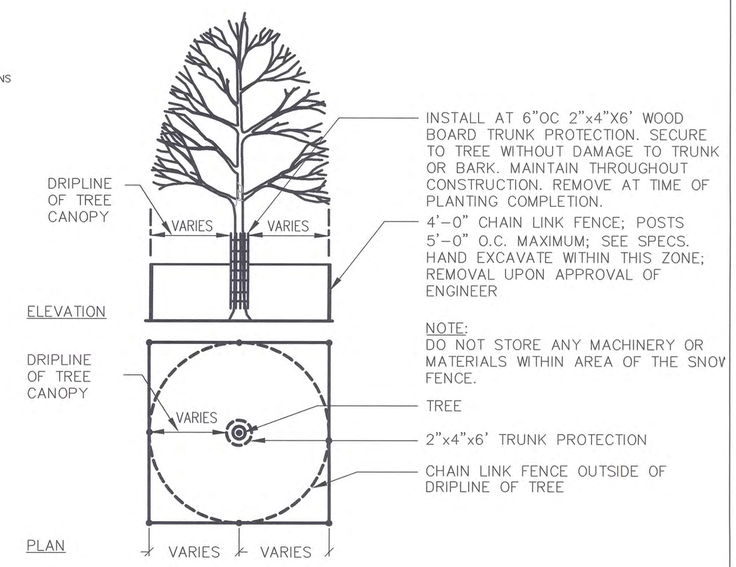


NOTE:
DO NOT STORE ANY MACHINERY OR MATERIALS WITHIN AREA OF THE SNOW FENCE.

## TREE PROTECTION DETAIL

N.T.S.

NOTE:
1. SEE DETAIL 3/SHEET L-3 & L-5 (PLANTING AREAS 5 & 7) FOR ADDITIONAL SOIL INFORMATION. IN THESE AREAS, HOLE FOR ROOTBALL SHALL BE INCREASED TO 4 TIMES ROOTBALL WIDTH

Drawing file: I:\Concord_200\200-1501 Nagog Pond WTP Conceptual Design\01 Conceptual Design\Drawings\CAD\Detail Sheets.dwg Plot Date: Nov 17,2015-1:50pm

Environmental Partners GROUP
A partnership for engineering solutions.

LIN ASSOCIATES, INC.
CONSULTING ENGINEERS

DiMarinisi & Wolfe
ARCHITECTS • URBAN DESIGNERS
BOSTON, MASSACHUSETTS

COMMONWEALTH OF MASSACHUSETTS STEPHEN C. OLSON CIVIL No. 38143 REGISTERED PROFESSIONAL ENGINEER 11/16/15

| MARK | DATE | DESCRIPTION |
|---|---|---|
| | | |

| | |
|---|---|
| Scale | AS SHOWN |
| Date | NOVEMBER 2015 |
| Job No. | 200-1501 |
| Designed by | XXX |
| Drawn by | XXX |
| Checked by | SCO |
| Approved by | SCO |

THIS LINE IS ONE INCH LONG WHEN PLOTTED AT FULL SCALE ON A 22" X 34" DRAWING

NAGOG POND WATER TREATMENT PLANT

TOWN OF CONCORD, MASSACHUSETTS

CIVIL DETAILS VII

FOR PERMITTING

Sheet No.

CD-7