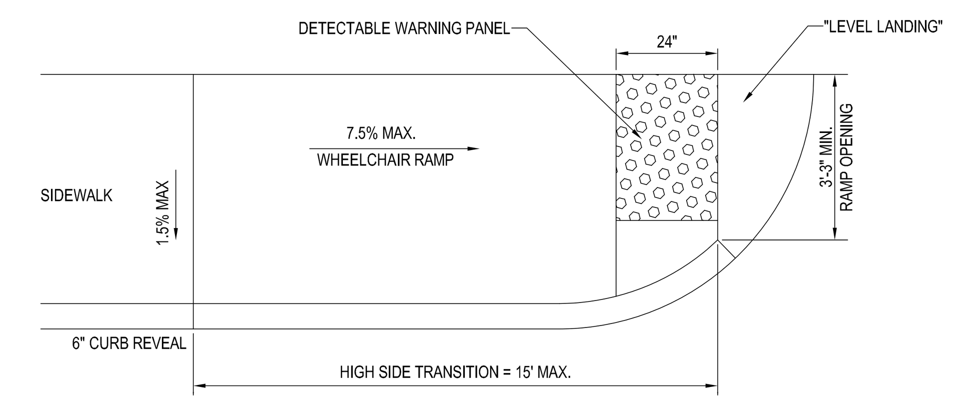

TYPICAL WHEELCHAIR RAMP

N.T.S.

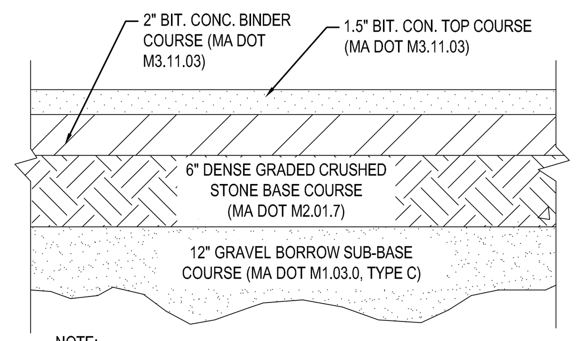

NOTE:
PAVEMENT BASE AND SUBBASE COURSES TO CONFORM TO TOWN OF ACTON REQUIREMENTS

TYPICAL PAVEMENT SECTION

N.T.S.

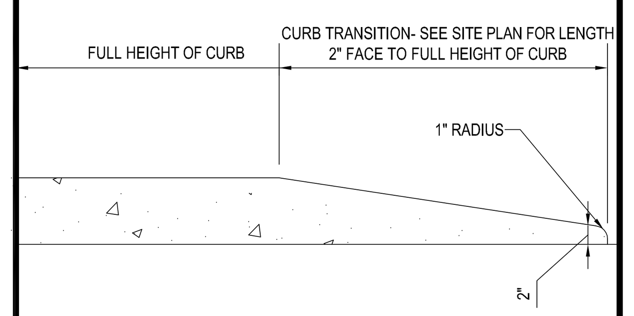

TRANSITION CURB DETAIL

N.T.S.

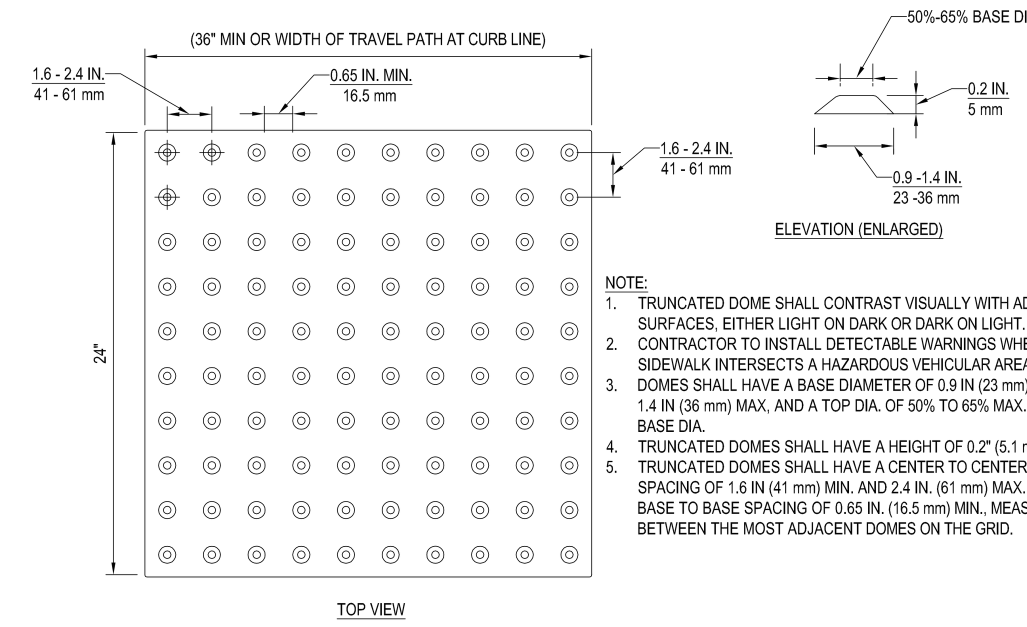

NOTE:
1. TRUNCATED DOME SHALL CONTRAST VISUALLY WITH ADJOINING SURFACES, EITHER LIGHT ON DARK OR DARK ON LIGHT.
2. CONTRACTOR TO INSTALL DETECTABLE WARNINGS WHEN SIDEWALK INTERSECTS A HAZARDOUS VEHICULAR AREA.
3. DOMES SHALL HAVE A BASE DIAMETER OF 0.9 IN (23 mm) MIN. TO 1.4 IN (36 mm) MAX, AND A TOP DIA. OF 50% TO 65% MAX. OF THE BASE DIA.
4. TRUNCATED DOMES SHALL HAVE A HEIGHT OF 0.2" (5.1 mm).
5. TRUNCATED DOMES SHALL HAVE A CENTER TO CENTER SPACING OF 1.6 IN (41 mm) MIN. AND 2.4 IN. (61 mm) MAX. AND A BASE TO BASE SPACING OF 0.65 IN. (16.5 mm) MIN., MEASURED BETWEEN THE MOST ADJACENT DOMES ON THE GRID.

NOTE TO DESIGNER:
IF A WALK CROSSES OR ADJOINS A VEHICULAR WAY WHERE THE WALKING SURFACE AND PAVEMENT ARE NOT SEPERATED BY CURBS, RAILING OR OTHER ELEMENTS, THE BOUNDARY BETWEEN THE AREA SHALL BE DEFINIED BY A CONTINUOUS DETECTABLE WARNING WHICH IS MIN. 36" WIDE (ADA ACCESSIBLE GUIDELINES PRINTED 11-4-06) AND MIN. 24" DEPTH.

TRUNCATED DOME PATTERN

N.T.S.

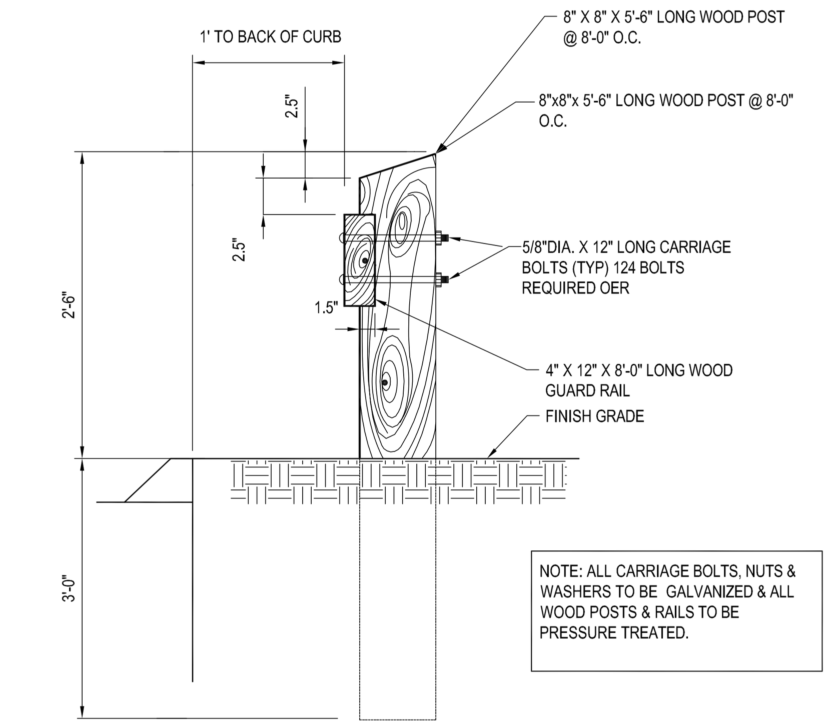

NOTE: ALL CARRIAGE BOLTS, NUTS & WASHERS TO BE GALVANIZED & ALL WOOD POSTS & RAILS TO BE PRESSURE TREATED.

WOOD GUIDERAIL DETAIL

N.T.S.

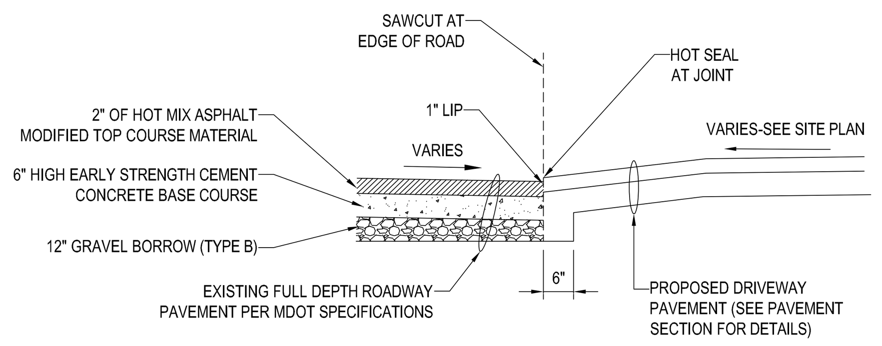

DRIVEWAY CONSTRUCTION DETAIL

N.T.S.

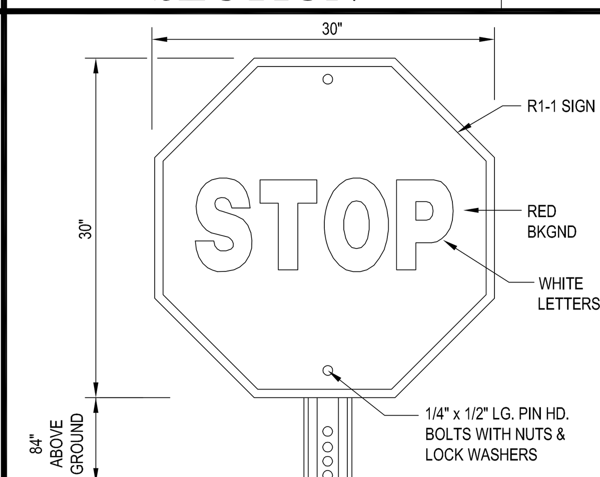

'STOP' SIGN

N.T.S.

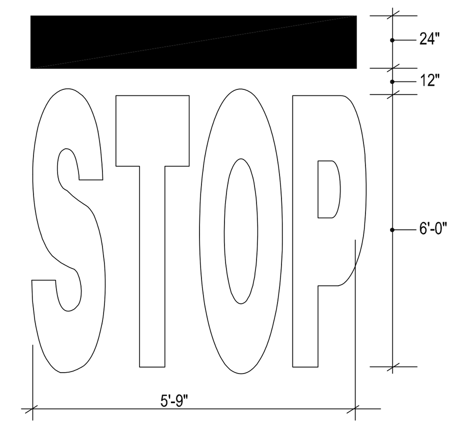

'STOP' BAR DETAIL

N.T.S.

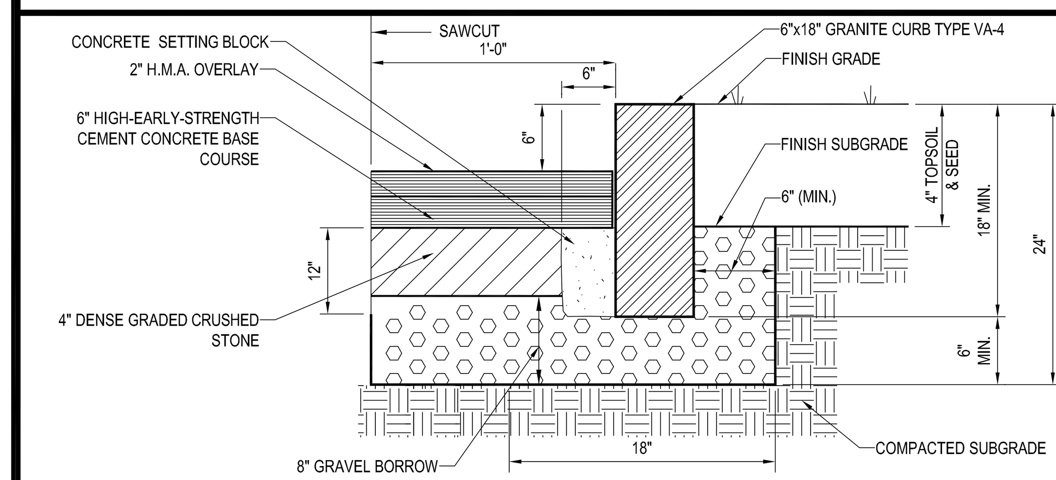

VERTICAL GRANITE CURB DETAIL

N.T.S.

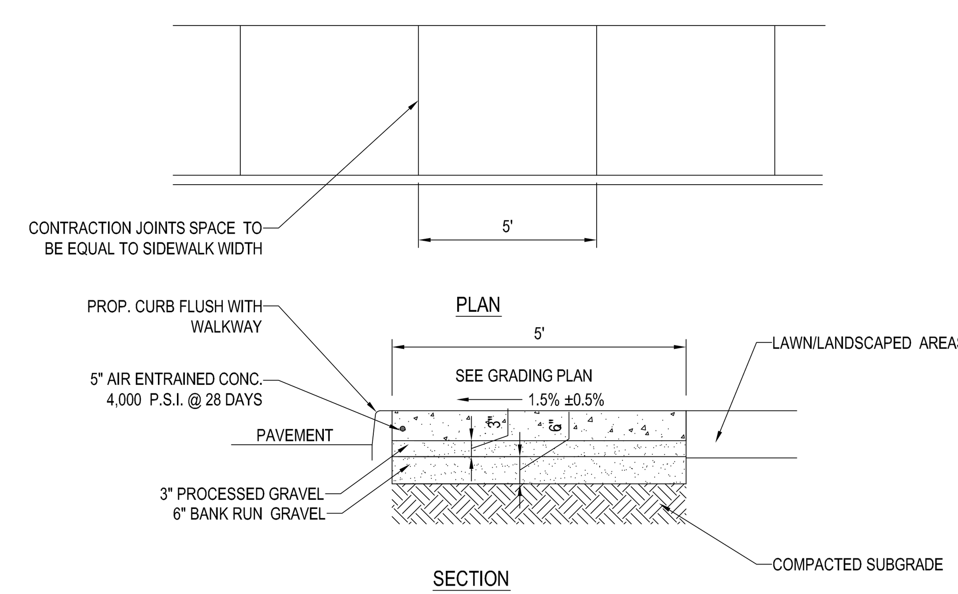

NOTE:
1. PROVIDE 1/2" PREMOLDED BITUMINOUS EXPANSION JOINT AT 20' O.C.
2. ALL JOINTS SEALED PER SPECIFICATIONS.

SIDEWALK DETAIL WITHIN ROW

N.T.S.

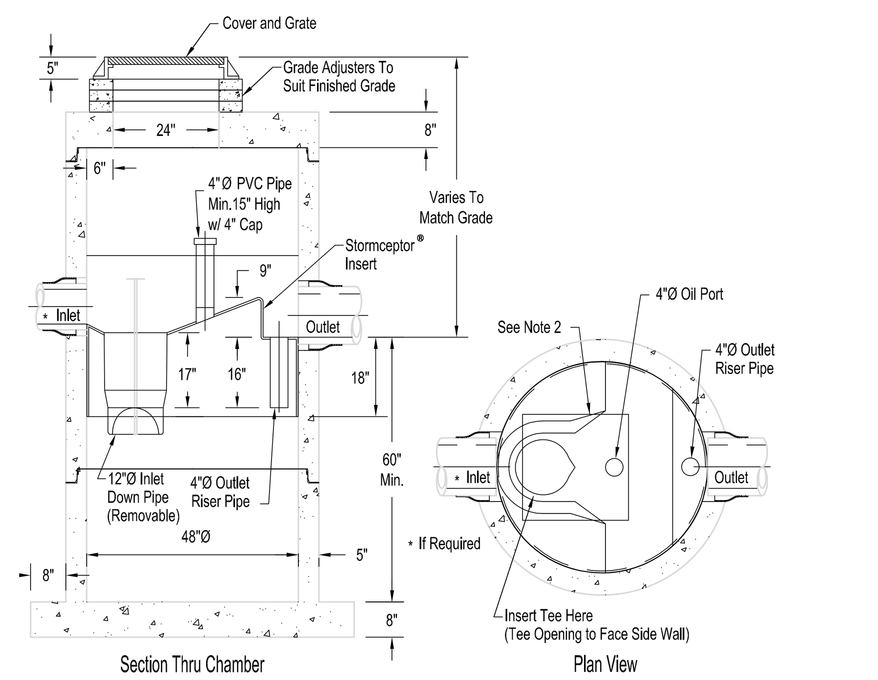

Notes:
1. The Use Of Flexible Connection is Recommended at The Inlet and Outlet Where Applicable.
2. The Cover Should be Positioned Over The Inlet Drop Pipe and The Oil Port.
3. The Stormceptor System is protected by one or more of the following U.S. Patents: #4985148, #5498331, #5725760, #5753115, #5849181, #6068765, #6371690.
4. Contact a Concrete Pipe Division representative for further details not listed on this drawing.

STORMCEPTOR 450i

N.T.S.

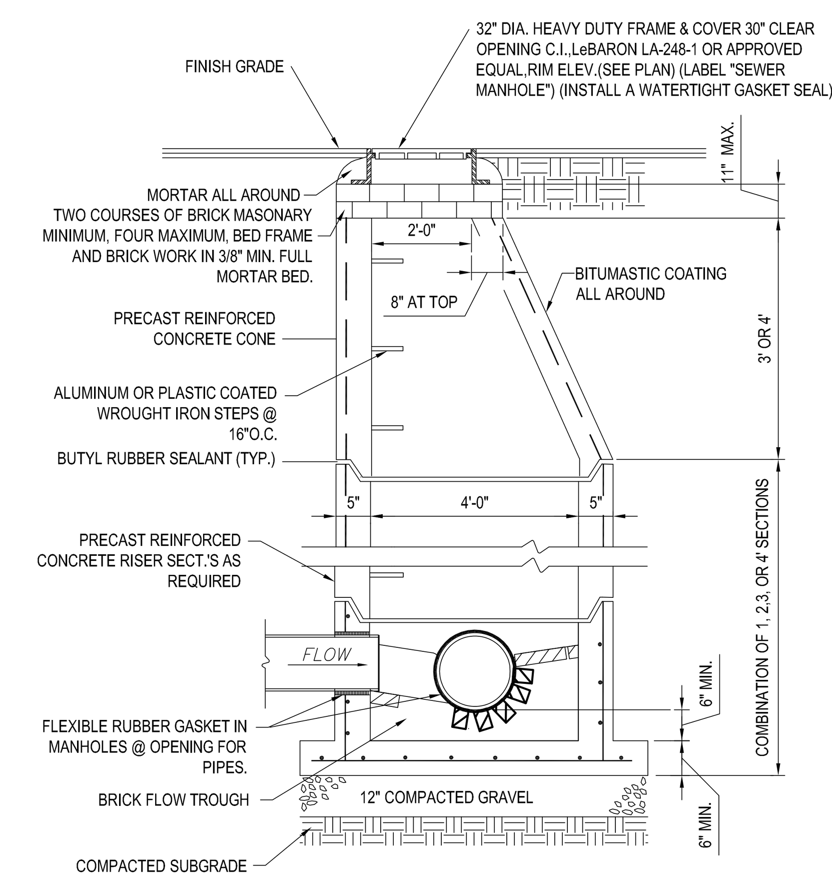

NOTE: ALL STRUCTURES SHALL BE SUITABLE FOR H-20 LOADING AND SHALL MEET THE REQUIREMENTS OF ASTM C478.

TYP. PRECAST CONCRETE SANITARY MANHOLE

N.T.S.

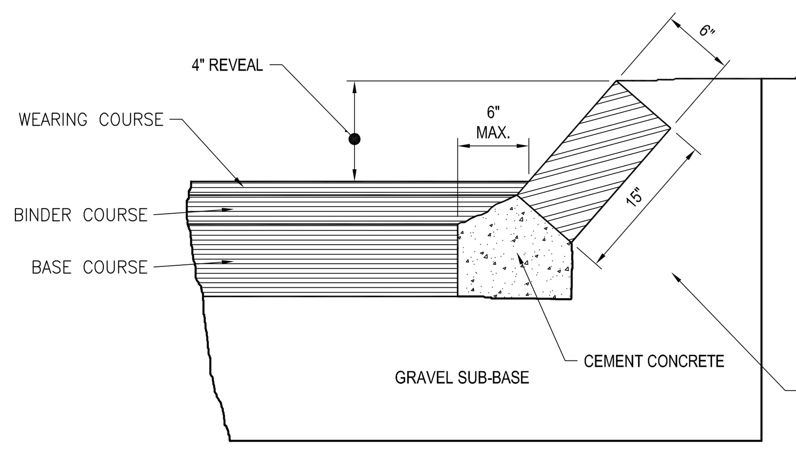

NOTES:

1. ANY CLASS OF CEMENT CONCRETE THAT IS ACCEPTABLE TO THE MA D.P.W. UNDER SECTION M4 OF THE 1973 STANDARD SPECIFICATIONS WILL BE WAIVED OF ALL TEST REQUIREMENTS. BITUMINOUS CONCRETE IS NOT TO BE USED AS A SUBSTITUTE.

2. THE REVEAL IS TO BE 4" UNDER ALL CONDITIONS.

SLOPED GRANITE CURBING

N.T.S.

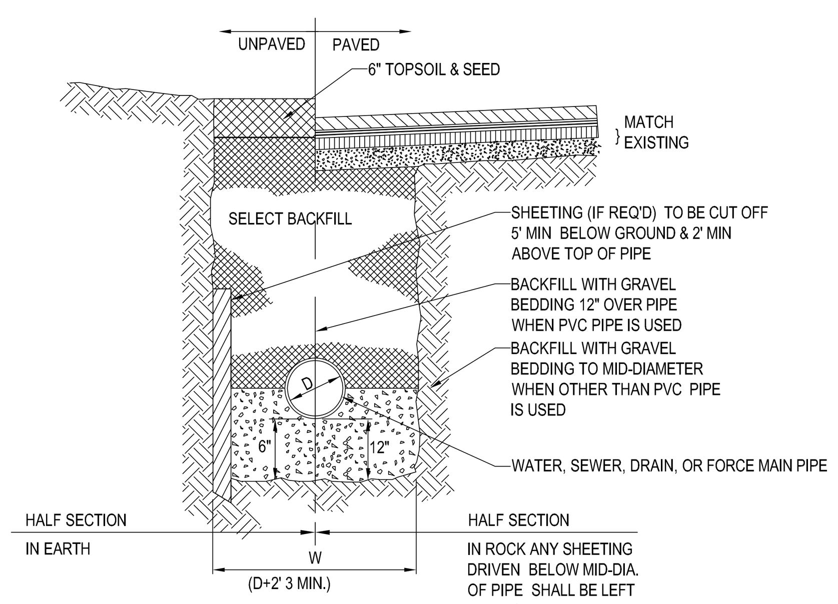

TYPICAL UTILITY TRENCH

N.T.S.

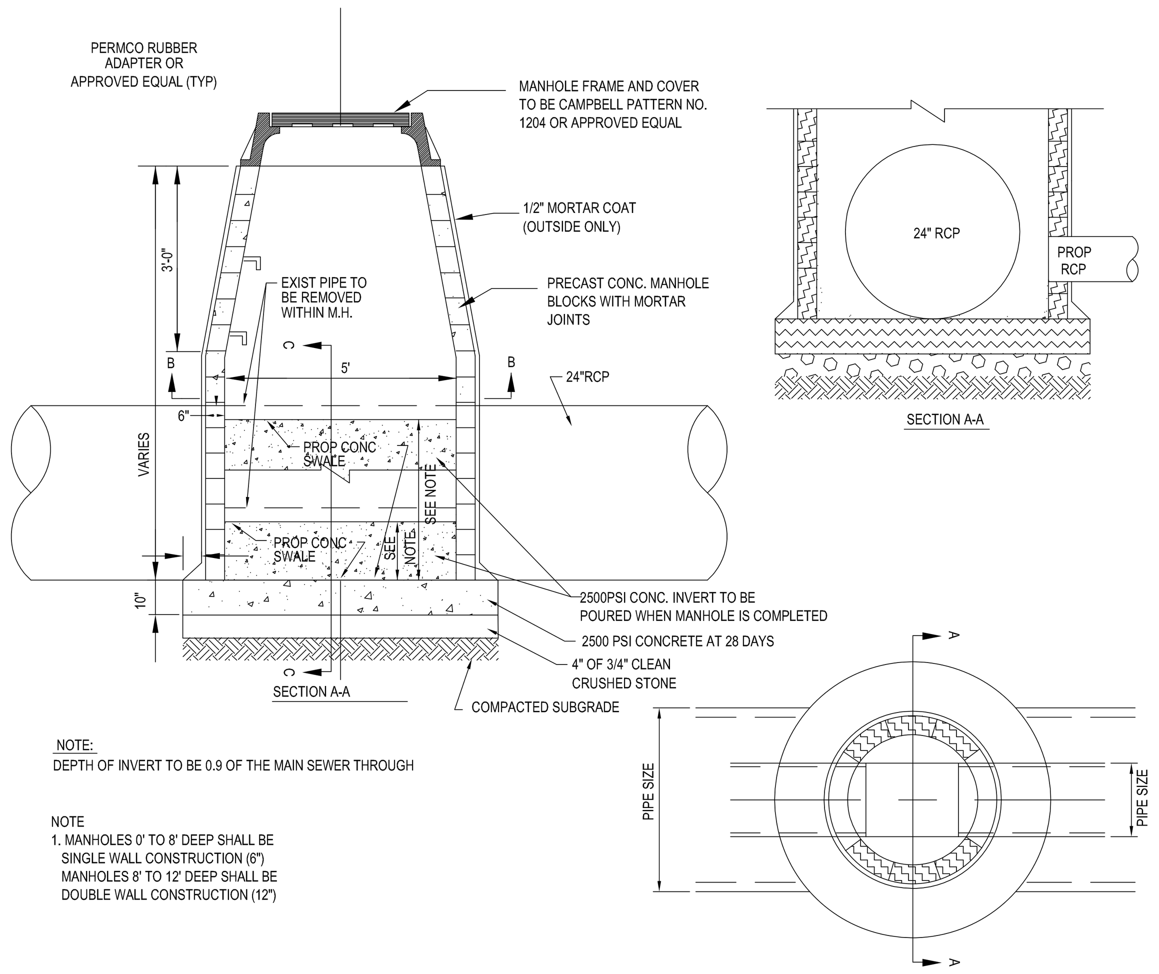

NOTE:
DEPTH OF INVERT TO BE 0.9 OF THE MAIN SEWER THROUGH

NOTE
1. MANHOLES 0' TO 8' DEEP SHALL BE SINGLE WALL CONSTRUCTION (6")
MANHOLES 8' TO 12' DEEP SHALL BE DOUBLE WALL CONSTRUCTION (12")

DOG HOUSE DETAIL

N.T.S.

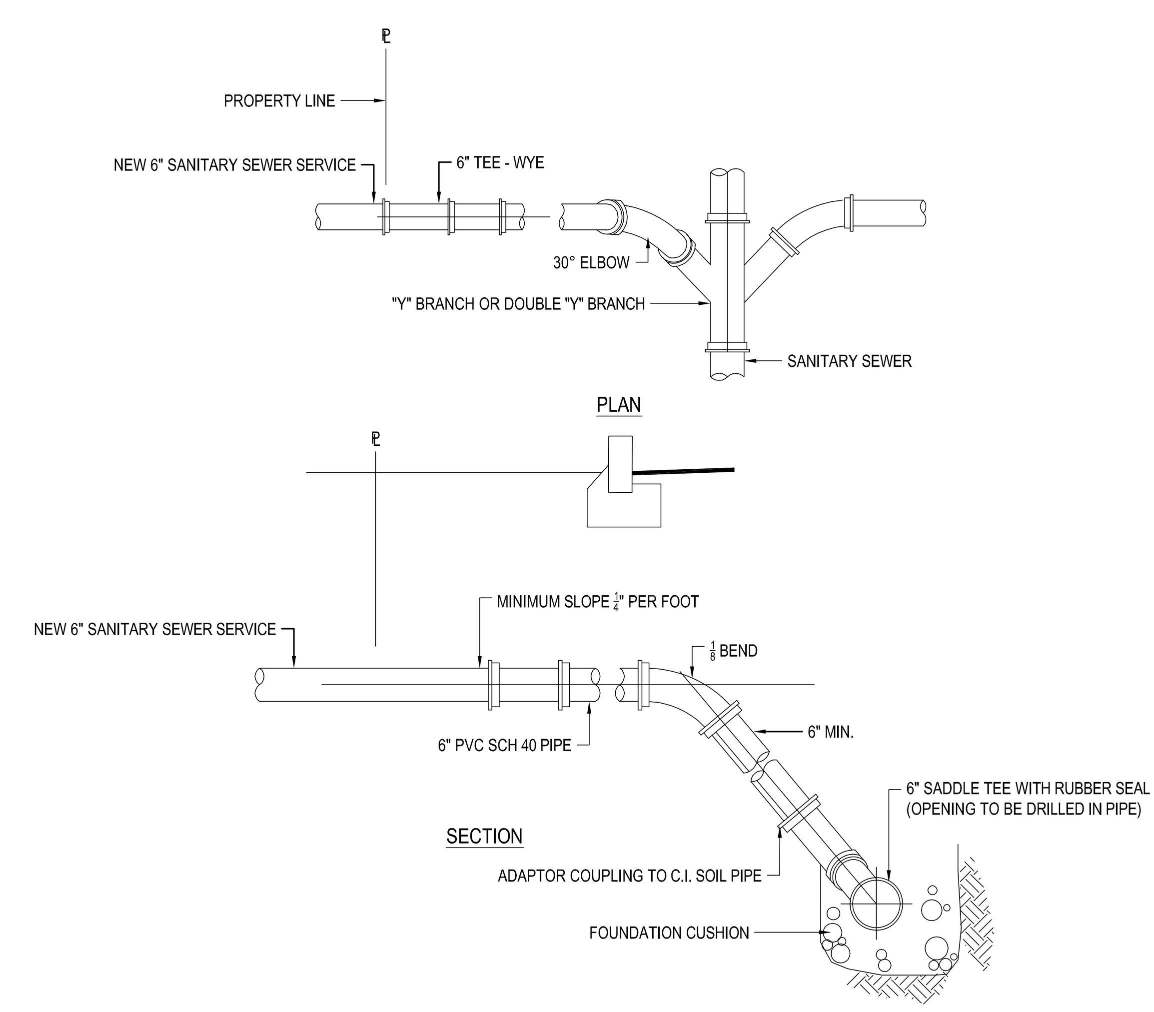

STANDARD (SEWER) CONNECTION

N.T.S.

DATE OF APPROVAL: ____________

DATE OF ENDORSEMENT: ____________

BOHLER ENGINEERING™

SITE CIVIL AND CONSULTING ENGINEERING
LAND SURVEYING · PROGRAM MANAGEMENT · LANDSCAPE ARCHITECTURE
SUSTAINABLE DESIGN · PERMITTING SERVICES · TRANSPORTATION SERVICES

- UPSTATE NEW YORK
- NEW ENGLAND
- BOSTON, MA
- NEW YORK METRO
- NEW YORK, NY
- NEW JERSEY
- PHILADELPHIA, PA
- LEHIGH VALLEY, PA
- SOUTHEASTERN, PA
- REHOBOTH BEACH, DE
- BALTIMORE, MD
- SOUTHERN MARYLAND
- NORTHERN VIRGINIA
- CENTRAL VIRGINIA
- RALEIGH, NC
- CHARLOTTE, NC
- TAMPA, FL
- SOUTH FLORIDA

THE INFORMATION, DESIGN AND CONTENT OF THIS PLAN ARE PROPRIETARY AND SHALL NOT BE COPIED OR USED FOR ANY PURPOSE WITHOUT PRIOR WRITTEN AUTHORIZATION FROM BOHLER ENGINEERING. ONLY APPROVED, SIGNED AND SEALED PLANS SHALL BE UTILIZED FOR CONSTRUCTION PURPOSES.
© BOHLER ENGINEERING, 2015,2016

REVISIONS

REV	DATE	COMMENT	BY
1	03/08/16	REVISED PER NEW SURVEY	CFD
2			
3			
4			
5			
6			
7			
8			
9			
10			
11			
12			
13			
14			
15			

PROJECT No.:	W151042
DRAWN BY:	KBS
CHECKED BY:	RMM/JGS
DATE:	02/22/16
SCALE:	AS NOTED
CAD I.D.:	W151042_DEF_SUB2

PROJECT:

PRELIMINARY PLAN
OF
SOUTHEAST KELLEY'S CORNER LOTS
FOR
394 MASSACHUSETTS AVENUE , LLC

LOCATION OF SITE
MASSACHUSETTS AVENUE
TOWN OF ACTON
MIDDLESEX COUNTY,MA

BOHLER ENGINEERING
352 TURNPIKE ROAD
SOUTHBOROUGH, MA 01772
Phone: (508) 480-9900
Fax: (508) 480-9080
www.BohlerEngineering.com

J.G. SWERLING
PROFESSIONAL ENGINEER
MASSACHUSETTS LICENSE No. 41697
NEW HAMPSHIRE LICENSE No. 14695
MAINE LICENSE No. 13816
CONNECTICUT LICENSE No. 30785
RHODE ISLAND LICENSE No. 11425

SHEET TITLE:
CONSTRUCTION DETAIL SHEET

SHEET NUMBER:
12
OF 13

REV 1 - 03/08/2016

P:\15\W151042\DWG\W151042_def_sub2.dwg , 12-Details, 10/6/2014, 4:26:00 PM, cdesocio, XeroX510-1.pc3, User634, 1:1