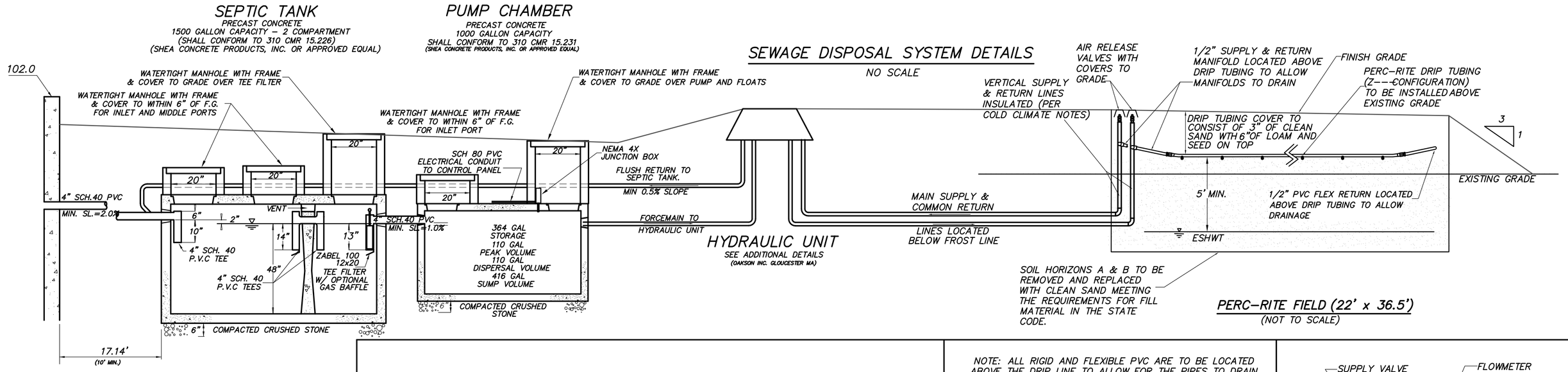

PERC-RITE FIELD (22' x 36.5')
(NOT TO SCALE)

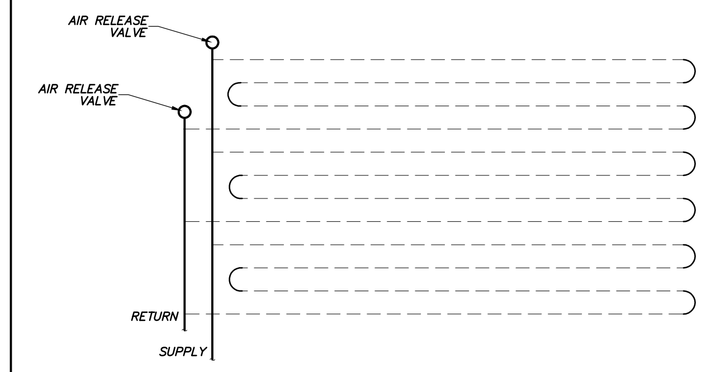

SIDE FEED Z134 ZONE DETAIL
(NOT TO SCALE)

PERC-RITE SIZING CALCULATIONS

SYSTEM SEWAGE FLOW DESIGN CRITERIA	
TYPE OF ESTABLISHMENT :	SINGLE FAMILY DWELLING
FLOW PER UNIT:	110 GPD/BEDROOM
NO. UNITS:	4 BEDROOMS
SYSTEM DESIGN FLOW:	440 GPD
SOIL ABSORBTION SYSTEM (SAS) SIZING CRITERIA	
PERCOLATION RATE:	<2 MPI
SOIL CLASS:	I
EFFLUENT LOADING RATE:	0.74 GPD/S.F.
REQUIRED SAS SIZE:	595 S.F. (TITLE V) 800 S.F. (ACTON)
SOIL ABSORBTION SYSTEM (SAS) AREA PROVIDED	
SAS BED DIMENSIONS:	48' LONG X 31' WIDE
AREA PROVIDED:	1488 S.F.
MIN. LINEAR FEET OF PIPE:	1488 S.F./2 = 744 L.F.
HYDRAULIC LOADING CAPACITY OF SAS:	220 GPD

PERC-RITE LAYOUT CALCULATIONS

SYSTEM LAYOUT DESIGN CRITERIA	
AREA OF SYSTEM:	803 S.F.
LENGTH PARALLEL TO CONTOUR (RUN):	36.5'
NUMBER OF RUNS= BED WIDTH/2:	22'/2 = 12 RUNS
ZONE SELECTION:	Z134

SCHEDULE OF ELEVATIONS

TOC	201.39
BUILDING SEWER INVERT	199.9±
SEPTIC TANK INLET INVERT	197.75
SEPTIC TANK OUTLET INVERT	197.50
PUMP CHAMBER INLET	197.40
PUMP CHAMBER SUMP	193.15
HYDRAULIC UNIT INVERT	200.00

CONTRACTOR SHALL VERIFY EXISTING BUILDING SEWER ELEVATION TO ENSURE MIN 2.0% SLOPE TO SEPTIC TANK

LEACHING SYSTEM DESIGN ELEVATIONS

	EXIST. GRADE	ESHW	INV. DRIP LINE	COVER
COR.1	99.50	196.00	201.00	201.60
COR.2	99.00	196.00	201.00	201.60
COR.3	97.25	196.00	201.00	201.60
COR.4	97.25	196.00	201.00	201.60

EXCAVATION AND REMOVAL OF THE OLD SEPTIC SYSTEM IS REQUIRED FOR THIS DESIGN.

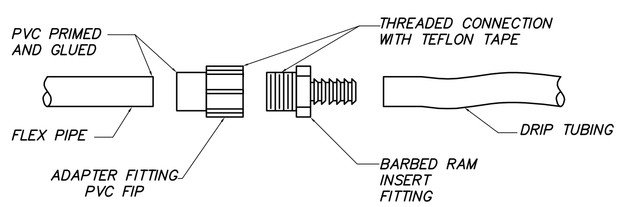

CONNECTING DRIP TUBING TO FLEXIBLE PVC PIPE
(NOT TO SCALE)

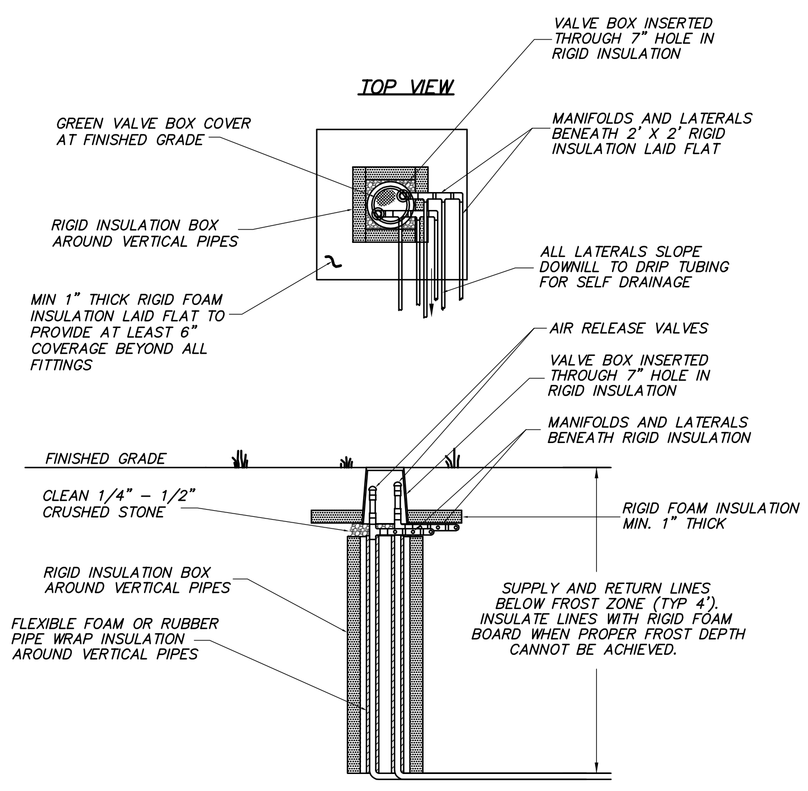

INSULATION DETAILS
(NOT TO SCALE)

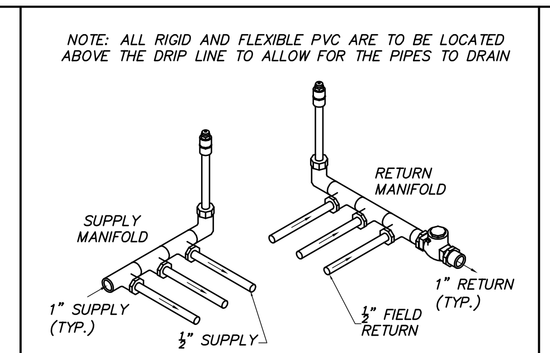

TYPICAL MANIFOLD CONNECTION
(NOT TO SCALE)

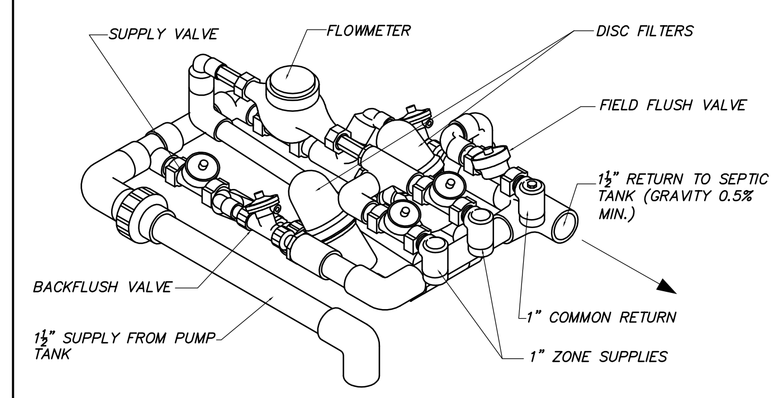

HYDRAULIC UNIT DETAIL
(NOT TO SCALE)

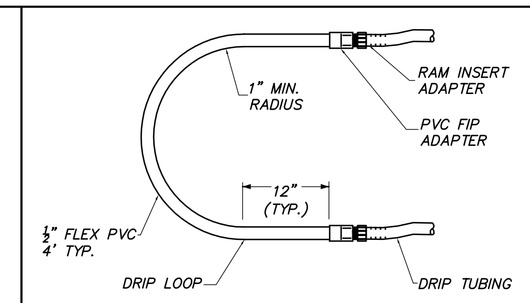

NOTE: ALL DRIP LOOPS ARE TO BE LOCATED 2" ABOVE THE DRIP LINE TO ALLOW THE LOOPS TO DRAIN

TYPICAL DRIP LOOP CONNECTION
(NOT TO SCALE)

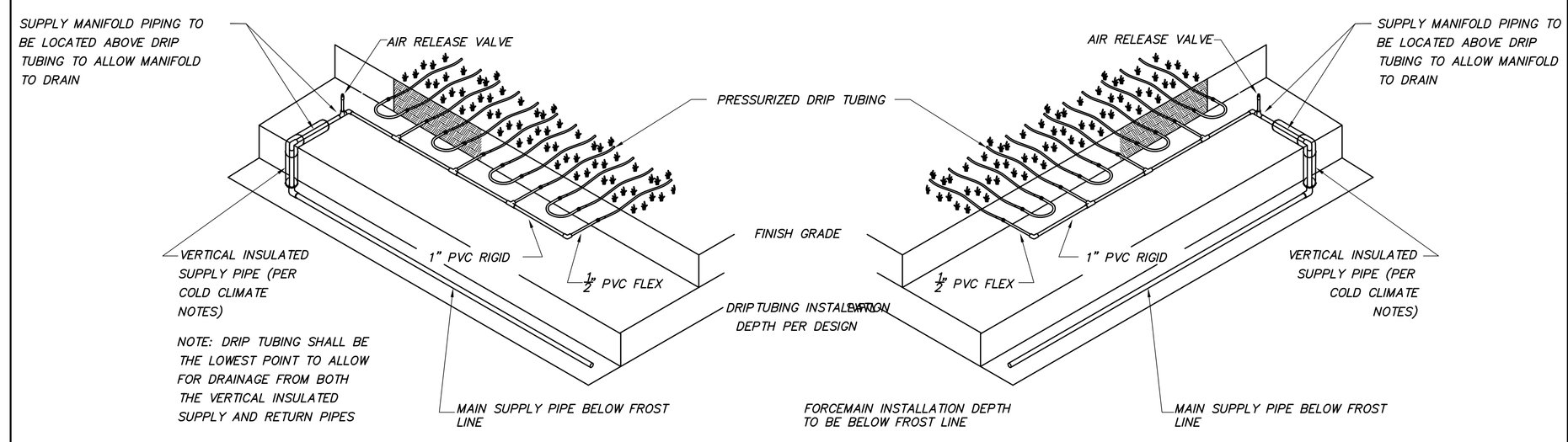

STANDARD DRIP SYSTEM DETAILS (SIDE FEED MANIFOLD)
(NOT TO SCALE)

PUMP INSTALLATION INSTRUCTIONS

1. MEASURE THE DISTANCE FROM THE BOTTOM OF THE PUMP CHAMBER TO 6" DOWN FROM THE TOP OF THE RISER. CUT THE EXTENSION PIPE (BY OTHERS) TO THE LENGTH NECESSARY TO REACH THIS HEIGHT. CUT HALF OF THE PIPE DOWN TO 12" TO 18" AWAY FROM THE TOP OF THE PIPE FOR A PUMP DISCHARGE PIPE AND ATTACH TO RISER (SEE DETAIL A).
2. GLUE THE EXTENSION COUPLING (BY OTHERS) TO THE EXTENSION PIPE AND TO THE COOL GUIDE.
3. FOR RE-USE OF EXISTING CONCRETE PUMP CHAMBERS: GLUE ON THE COOL GUIDE FLAT CAP AND PLACE THE COOL GUIDE FIRMLY IN THE BOTTOM OF THE TANK. ATTACH THE EXTENSION TO THE RISER WITH THE ANCHORS AS SHOWN.
4. FOR USE IN NEW CONCRETE PUMP CHAMBERS: ANCHOR THE FLAT CAP TO THE BOTTOM OF THE TANK TO THE PROPER LOCATION TO HOLD THE COOL GUIDE AND EXTENSION. THE CAP MAY OR MAY NOT BE GLUED TO THE DEVICE. ATTACH THE EXTENSION WITH THE ANCHORS AS SHOWN.
5. PLACE THE PIPE DOPE ON THE COOL GUIDE ADAPTER THREADS AND THREAD THEM INTO THE PUMP DISCHARGE.
6. ATTACH COOLING COLLAR TO ADAPTER WITH SET SCREW PROVIDED.
7. GLUE PIPE INTO FLOW COLLAR AND WITH PUMP ATTACHED, LOWER INTOT HE GUIDE TUBE.
8. ATTACH TO DISCHARGE PIPE, VALVES, AND CONNECT ELECTRICAL AS SPECIFIED.

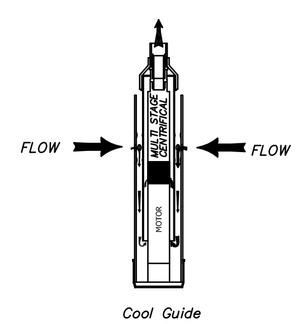

Cool Guide
Patent No. 6,262,689

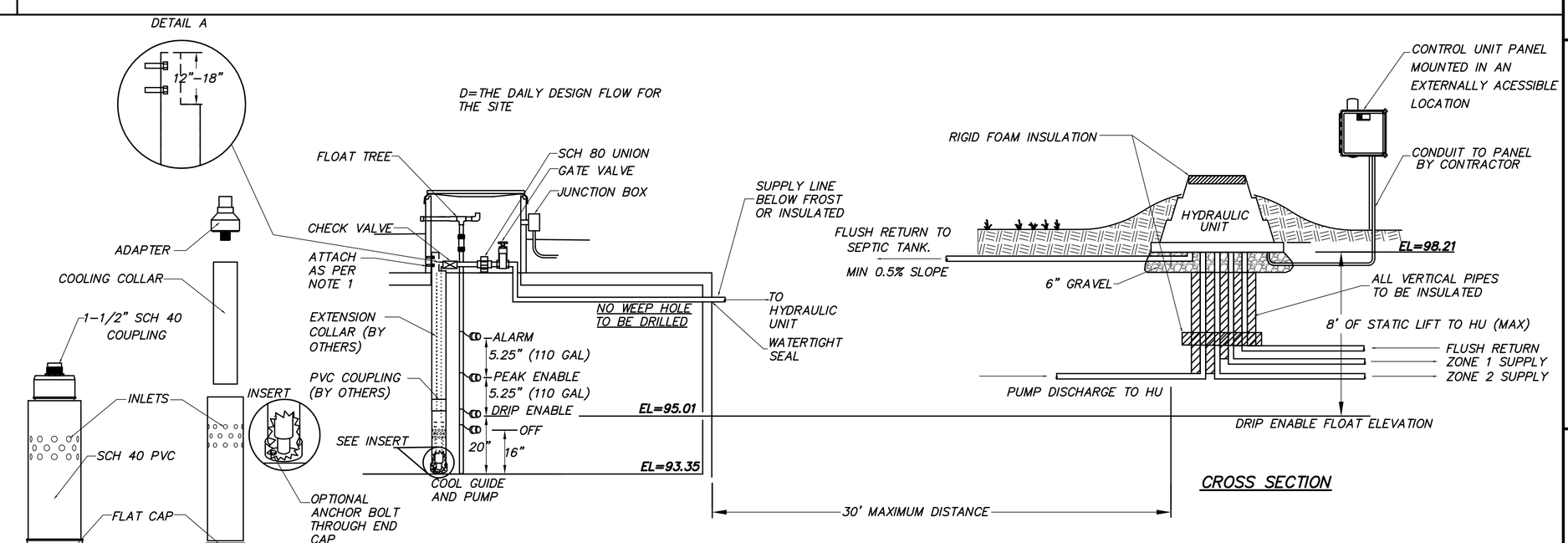

TYPICAL PUMP CHAMBER & HYDRAULIC UNIT DETAIL
(NOT TO SCALE)

CROSS SECTION

#	DATE	REVISION COMMENT

DATE: 3/17/16

COPYRIGHT 2016, MARKEY & RUBIN INC.

COMMONWEALTH OF MASSACHUSETTS JONATHAN L. MARKEY CIVIL No. 46494 REGISTERED PROFESSIONAL ENGINEER 3/17/16

SUBSURFACE SEWAGE DISPOSAL DESIGN DETAIL SHEET

363 ARLINGTON STREET
ACTON, MASSACHUSETTS

CLIENT:

RUSSELL & CHRISTINE DOHERTY
363 ARLINGTON STREET
ACTON, MASSACHUSETTS

Markey & Rubin
CIVIL ENGINEERING
360 MASSACHUSETTS AVE, SUITE 202
ACTON, MASSACHUSETTS 01720
P(978) 264-4600 F(978) 263-0447
www.MarkeyAndRubin.com

D1

SHEET 2 OF 2

JOB# 5151