SITE USE PLANS

HOST: ADDRESS, CITY, STATE ZIP &
0 SOUTH ACTON ROAD (REAR), STOW, MA 01775
XXX.XXX kW DC STC RATED SOLAR ELECTRIC SYSTEM

GENERAL NOTES

1. AS CONTAINED HEREIN, "CONTRACTOR" IS ASSUMED TO BE BORREGO SOLAR SYSTEMS, INC AND "SUBCONTRACTOR" IS BORREGO'S INSTALLATION SUBCONTRACTOR.
2. THESE NOTES SET MINIMUM STANDARDS FOR CONSTRUCTION. THE DRAWINGS GOVERN OVER THESE NOTES TO THE EXTENT SHOWN.
3. ALL WORK SHALL CONFORM TO THE MINIMUM STANDARDS OF THE FOLLOWING: LOCAL BUILDING CODE, LOCAL ELECTRICAL CODE, ANY OTHER REGULATING AGENCIES WHICH HAVE AUTHORITY OVER ANY PORTION OF THE WORK AND THOSE CODES AND STANDARDS LISTED IN THESE DRAWINGS AND IN THE SUBCONTRACTOR AGREEMENT.
4. EXCEPTIONS TO THE CONTRACT DOCUMENTS ARE PERMITTED ONLY WITH THE APPROVAL OF BORREGO.
5. COORDINATE THESE DRAWINGS WITH SPECIFICATIONS AND MANUFACTURER INSTALLATION AND OPERATION MANUALS AND NOTIFY BORREGO OF ANY DISCREPANCIES PRIOR TO BEGINNING WORK.
6. DRAWINGS HAVE BEEN DETAILED IN COMPLIANCE WITH U.L. LISTING REQUIREMENTS AND THE BUILDING CODE FOR THE MATERIALS SPECIFIED. IF AN ALTERNATE OR SUBSTITUTED MATERIAL IS ACCEPTED AS AN EQUAL BY BORREGO, THE SUBCONTRACTOR WILL ASSUME THE RESPONSIBILITY FOR WHATEVER CONSTRUCTION MODIFICATION AND/OR ADDITIONAL COST THAT IS REQUIRED BY REASON OF THIS ACCEPTANCE.
7. PRIOR TO THE COMMENCEMENT OF ANY WORK, EACH TRADE SHALL VERIFY EXISTING CONDITIONS AND NOTIFY BORREGO OF ANY DISCREPANCIES TO THAT WHICH IS SHOWN IN THESE DRAWINGS, INCLUDING BUT NOT LIMITED TO DIMENSIONS OF THE WORK AREA, STRUCTURE, EXISTING ELECTRICAL SERVICE, CONDUIT PATHS, OBSTRUCTIONS, ACCESSIBILITY ISSUES, AND WORKING CLEARANCES. ANY WORK PERFORMED IN CONFLICT WITH THE CONTRACT DOCUMENTS OR ANY CODE REQUIREMENTS SHALL BE CORRECTED BY THE SUBCONTRACTOR AT HIS OWN EXPENSE.
8. SUBCONTRACTOR INITIATED CHANGES SHALL BE SUBMITTED IN WRITING TO BORREGO FOR APPROVAL PRIOR TO MAKING ANY CHANGES. APPROVED CHANGES REQUIRE A DRAWING REVISION TO MAINTAIN CONTROL OVER THE APPROVED DESIGN. DEVIATION FROM THESE PLANS PRIOR TO BORREGO APPROVAL PLACES ALL LIABILITY ON THE SUBCONTRACTOR.
9. UNLESS INDICATED AS EXISTING (E), ALL PROPOSED MATERIALS AND EQUIPMENT ARE NEW.
10. ALL ITEMS TO BE REMOVED AND RELOCATED OR REPLACED SHALL BE HANDLED WITH PROPER CARE AND STORED IN A SAFE PLACE TO PREVENT DAMAGE; OR BE REPLACED AT THE SUBCONTRACTOR'S EXPENSE.
11. ALL EQUIPMENT SHALL BE MOUNTED AS SHOWN. WHERE DETAILS ARE NOT PROVIDED, THE SUBCONTRACTOR SHALL USE DILIGENT EFFORTS TO MOUNT EQUIPMENT SUCH THAT IT WILL BE CLEAN, LEVEL AND SOLID.
12. ALL SURFACES SHALL BE PATCHED AND PAINTED AROUND NEW DEVICES AND EQUIPMENT TO MATCH EXISTING FINISHES.
13. ANY METAL SHAVINGS RESULTING FROM SITE WORK SHALL BE CLEANED FROM ROOF SURFACES, ENCLOSURES AND ANY ADDITIONAL AREAS WHERE OXIDIZED OR CONDUCTIVE METAL SHAVINGS MAY CAUSE RUST, ELECTRICAL SHORT CIRCUITS OR OTHER DAMAGE.
14. NO STRUCTURAL MEMBER SHALL BE DRILLED UNLESS SPECIFICALLY AUTHORIZED BY BORREGO.
15. SUBCONTRACTOR ACKNOWLEDGES THAT THE SYSTEM AS INDICATED ON THE PLANS REQUIRES ALL COMPONENTS TO BE INSTALLED TO PROPERLY RESIST WIND LOADS, SUCH AS BALLAST, WIND DEFLECTORS, ETC. IT IS THE RESPONSIBILITY OF THE SUBCONTRACTOR TO PROVIDE TEMPORARY MEANS TO RESIST WIND LOADS FOR ALL COMPONENTS NOT YET INSTALLED DURING AND AFTER REGULAR WORKING HOURS. THIS MAY INCLUDE TEMPORARY TIE DOWNS, COVERING, BALLAST OR ANY OTHER MEANS. DAMAGE TO ANY INSTALLED SYSTEM COMPONENT OR THE EXISTING FACILITY AS A RESULT OF THE UNFINISHED CONDITION NOT ADEQUATELY RESISTING WIND SHALL BE THE RESPONSIBILITY OF THE SUBCONTRACTOR TO REPAIR OR REPLACE AT THE SUBCONTRACTOR'S COST.
16. TREES MAY GROW DURING THE LIFE OF THE SYSTEM AND IMPACT THE PRODUCTION.

V.7

APPLICABLE CODES AND STANDARDS

2014 MASSACHUSETTS ELECTRICAL CODE 527 CMR12.00
MASSACHUSETTS BUILDING CODE 8TH EDITION
UL–1703 – SOLAR MODULES
UL–1741 – INVERTERS, COMBINER BOXES
UL–2703 – RACKING MOUNTING SYSTEMS AND CLAMPING DEVICES FOR PV MODULES

PROJECT SCOPE

THIS PROJECT CONSISTS OF THE INSTALLATION OF SOLAR MODULES, PER THE SYSTEM DESCRIPTION, BELOW. THE MODULES WILL BE INSTALLED ON A GROUND MOUNTED RACKING SYSTEM. THE MODULES WILL BE WIRED IN SERIES STRINGS TO COMBINER BOXES, WHERE THEY WILL BE WIRED IN PARALLEL. THE OUTPUT OF THE COMBINER BOXES WILL BE CONNECTED IN PARALLEL TO THE INVERTERS, WHICH CONVERT THE PHOTOVOLTAIC OUTPUT POWER FROM DC TO AC. THE SOLAR ELECTRIC SYSTEM WILL BE INTERCONNECTED WITH THE EXISTING SITE ELECTRICAL SYSTEM IN ACCORDANCE WITH THE APPLICABLE ELECTRIC CODE AND UTILITY REQUIREMENTS.

SYSTEM DESCRIPTION

SYSTEM SIZE (DC STC)	XXX.XXX KW	SYSTEM SIZE (AC)	YYY.YYY KW
MODULES	(XXX) BRAND MODEL	CEC RATING	XXX.X W
MODULES PER STRING	XX	# OF STRINGS	XX
RACKING	BRAND MODEL	TILT ANGLE	TILT°
INVERTER(S)	(X) BRAND MODEL	CEC EFFICIENCY	XX.X %
	(2) SUNGROW SG36KU–V11		98%
AZIMUTH	XXX° (SOUTH = 180°)		

PROJECT DIRECTORY

OWNER
TBD

HOST
HOST NAME
CONTACT NAME
(XXX) XXX–XXXX
350 GREAT ROAD
STOW, MA 01775

AUTHORITY HAVING JURISDICTION
AHJ NAME
(978)897–2193
AHJ STREET ADDRESS
CITY, STATE ZIP

UTILITY
UTILITY

PROJECT MANAGER
FIRM: BORREGO SOLAR
CONTACT: JOE BUSCH
PHONE: (978)–513–2637

CIVIL ENGINEER
FIRM: BORREGO SOLAR
CONTACT: DAVID ALBRECHT, P.E.
PHONE: (978)–513–2621

STRUCTURAL ENGINEER
FIRM: BORREGO SOLAR SYSTEMS, INC.
CONTACT: DAVID DUTIL, P.E, LEED AP
PHONE: (978)–513–2623

ELECTRICAL ENGINEER
FIRM: BORREGO SOLAR
CONTACT: PAT RETELLE
PHONE: (978)–610–2864

DESIGN ENGINEER
FIRM: BORREGO SOLAR
CONTACT: KATLYN LAWVER
PHONE: (978)–221–3107

LOCATION MAP

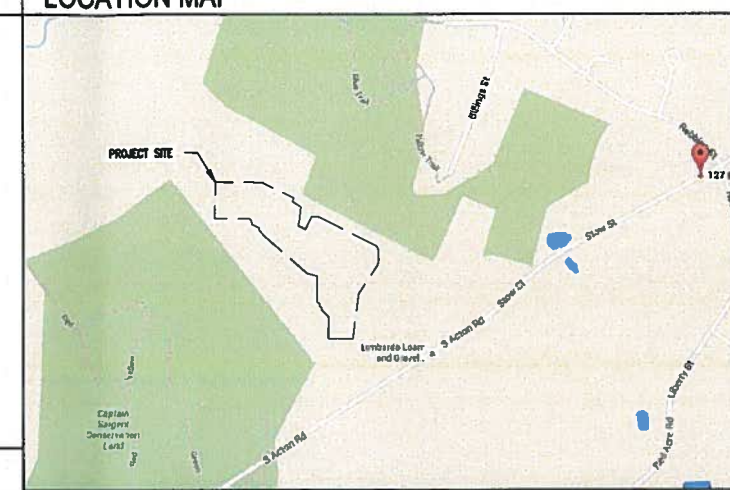

AERIAL VIEW

GENERAL ABBREVIATIONS

(E)	EXISTING	NS	NORTH–SOUTH
AHJ	AUTHORITY HAVING JURISDICTION	NTS	NOT TO SCALE
AL	ALUMINUM	OAE	OR APPROVED EQUAL
APPROX	APPROXIMATE	OC	ON CENTER
ARY	ARRAY	OD	OUTSIDE DIAMETER
BLDG	BUILDING	OFCI	OWNER FURNISHED CONTRACTOR INSTALLED
BSS	BORREGO SOLAR SYSTEM		
CL	CENTERLINE	PV	PHOTOVOLTAIC
DAS	DATA ACQUISITION SYSTEM	PVC	POLY VINYL CHLORIDE
DIA	DIAMETER	SCH	SCHEDULE
DO	DITTO	SS	STAINLESS STEEL
EW	EAST–WEST	SSS	SOLAR SUPPORT STRUCTURE
FBO	FURNISHED BY OTHERS	STC	STANDARD TEST CONDITIONS
FF	FORWARD FACING	TBD	TO BE DETERMINED
GALV	GALVANIZED	TP	TAMPER PROOF
HDG	HOT DIP GALVANIZED	TYP	TYPICAL
HVAC	HEATING VENTILATION AND AIR CONDITIONING	UON	UNLESS OTHERWISE NOTED
		VIF	VERIFY IN FIELD
ID	INSIDE DIAMETER	WP	WEATHER PROOF
MFR	MANUFACTURER		
MOD	SOLAR MODULE		

REV 1.0

Sheet List Table

Sheet Number	Sheet Title
T–1	TITLE PAGE
C–0.0	CIVIL NOTES
C–1.0	EXISTING CONDITIONS PLAN
C–1.1	LEASE–OVERLAY DISTRICTS PLAN
C–2.0	TREE CLEARING PLAN
C–3.0	LAYOUT AND MATERIALS PLAN
C–4.0	GRADING AND EROSION CONTROL PLAN
C–5.0	CIVIL DETAILS
C–5.1	CIVIL DETAILS
E–0.0	ELECTRICAL SINGLE LINE DIAGRAM

ACTON ZONING SUMMARY TABLE

Zoning District:		R-2 (RESIDENTIAL 2)	R-2 (RESIDENTIAL 2)
		Required	Provided
Minimimum Lot Size:		20,000 s.f.	235,726 sq.ft. (5.4 acres)
Minimum Lot Frontage:		150 ft	138 ft
Yard Dimensions	Front :	30	374 ft
	Side :	10	29.5
	Rear :	10	337 ft
Maximum Height:		36 ft	N/A

STOW ZONING SUMMARY TABLE

Zoning District:		RESIDENTIAL	RESIDENTIAL
		Required	Provided
Minimimum Lot Size:		65,340 sq.ft.	859,470 sq.ft. (20.64 acres)
Minimum Lot Frontage:		200 ft	878 ft
Yard Dimensions	Front :	30 ft	130 ft
	Side :	50 ft	170 ft
	Rear :	40 ft	137.5 ft
Minimum Open Space in percent:		10%	N/A

RECEIVED
APR 11 2016
ACTON CONSERVATION COMMISSION

THIS DOCUMENT IS PROVIDED BY BORREGO SOLAR SYSTEMS INC. TO FACILITATE THE SALE AND INSTALLATION OF A SOLAR POWER SYSTEM FROM BORREGO SOLAR SYSTEMS. REPRODUCTION, RELEASE OR UTILIZATION FOR ANY OTHER PURPOSE, WITHOUT PRIOR WRITTEN CONSENT IS STRICTLY PROHIBITED.

BORREGO SOLAR
55 TECHNOLOGY DRIVE, SUITE 102
LOWELL, MA 01851
PHONE: (855) 698-6273
FAX: (855) 843-5776
WWW.BORREGOSOLAR.COM

NOT FOR CONSTRUCTION

COMMONWEALTH OF MASSACHUSETTS
DAVID M. ALBRECHT
CIVIL
NO. 37313
4-11-16

SITE USE PLANS
2798.82 kW SOLAR ENERGY SYSTEM
0 SOUTH ACTON ROAD REAR STOW, MA 01775
127 STOW STREET ACTON, MA 01720

PROJECT NUMBER:
XXX–XXXX

REV	DATE	DRAWN	CHECKED	RELEASE LEVEL
1	2/29/16	FR	DA	SUBMISSIONS TO ACTON/STOW
2	3/10/16	DA	DA	RESUBMIT TO STOW CONCOM
3	4/04/16	DA	DA	RESUBMIT TO STOW PLANNING BOARD
	4/08/16	DA	DA	ACTON CONCOM MODIFICATIONS

SCALES STATED ON DRAWINGS ARE VALID ONLY WHEN PLOTTED ARCH D 24" X 36"

T-1
TITLE PAGE

C:\Users\adbrecht\Box Sync\Salesforce\Projects\127 Stow Street - Acton\Design\Working Set\127_Stow-SUP-04-07-16_DA_In_Progress

GENERAL CIVIL NOTES

GENERAL NOTES
1. AS CONTAINED HEREIN, "CONTRACTOR" IS ASSUMED TO BE BORREGO SOLAR SYSTEMS, INC. , "SUBCONTRACTOR" IS BORREGO'S INSTALLATION SUBCONTRACTORS (INCLUDING SITE WORK SUBCONTRACTOR) AND CIVIL ENGINEER OF RECORD (CEOR) IS BORREGO'S IN-HOUSE CIVIL ENGINEER.
2. EXISTING CONDITIONS SURVEY INFORMATION WAS PREPARED BY DOUCET SURVEYING, INC., NEWMARKET, NH. SURVEY IS BASED ON GEOGRAPHIC INFORMATION SYSTEMS DATA LAYERS SUPPLIED BY THE COMMONWEALTH OF MASSACHUSETTS AS WELL AS INFORMATION GATHERED FROM GOOGLE EARTH. LIDAR TOPOGRAPHY BASED ON NAD 1983.
3. WETLANDS DELINEATED BY NEW ENGLAND ENVIRONMENTAL ON JULY 20, 2015. DELINEATION SURVEYED BY GPS.
4. THE SUBCONTRACTORS SHALL VERIFY ALL EXISTING CONDITIONS IN THE FIELD AND REPORT ANY DISCREPANCIES BETWEEN PLANS AND ACTUAL CONDITIONS TO THE OWNER'S REPRESENTATIVE PRIOR TO STARTING WORK.
5. THE TOWN OF STOW AND ACTON APPROVALS SHALL BE KEPT ON SITE AT ALL TIMES.
6. THE CONTRACTOR SHALL ALLOW TOWN OF STOW AND ACTON OFFICIALS ON SITE DURING CONSTRUCTION HOURS ONLY AND AS LONG AS ALL SAFETY MEASURES ARE IN PLACE.
7. HAZARDOUS MATERIALS LISTED IN THE STOW ZONING BYLAWS ARE FORBIDDEN ON THIS SITE.
8. THE LOCATIONS OF UNDERGROUND UTILITIES SHOWN ON THIS PLAN ARE BASED ON THE SURVEY REFERENCED ABOVE. THE CONTRACTOR SHALL CONTACT DIGSAFE AND THE PROPER LOCAL AUTHORITIES OR RESPECTIVE UTILITY COMPANIES TO CONFIRM THE LOCATION OF ALL EXISTING UTILITIES BEFORE COMMENCING WORK. ANY DAMAGE DUE TO FAILURE OF THE CONTRACTOR TO CONTACT THE PROPER AUTHORITIES SHALL BE BORNE BY THE CONTRACTOR.
9. SUBCONTRACTOR(s) SHALL THOROUGHLY FAMILIARIZE THEMSELVES WITH ALL CONSTRUCTION DOCUMENTS, SPECIFICATIONS, AND SITE CONDITIONS PRIOR TO BIDDING AND PRIOR TO CONSTRUCTION.
10. ANY DISCREPANCIES BETWEEN DRAWINGS, SPECIFICATIONS, AND SITE CONDITIONS SHALL BE REPORTED IMMEDIATELY TO THE CONTRACTOR/CEOR FOR CLARIFICATION AND RESOLUTION PRIOR TO BIDDING OR CONSTRUCTION.
11. CONTRACTOR PARKING AREA(S) SHALL BE AS DESIGNATED ON THESE PLANS UNLESS OTHER AREAS APPROVED BY BORREGO SOLAR SITE SUPERINTENDENT. PARKING AREAS SHALL BE CONSTRUCTED USING A MINIMUM OF 6-INCHES OF GRAVEL 6-INCH MINUS) AND SURROUNDED BY AN ORANGE SNOW FENCE. POST-CONSTRUCTION THE PARKING AREA(S) SHALL BE RESTORED TO PRE-CONSTRUCTION CONDITIONS, INCLUDING, BUT NOT LIMITED TO REGARDING, LOAMING AND SEEDING. IN NO CASE SHALL PARKING AREAS, LAYDOWN AREAS, CONSTRUCTION TRAILERS, AND PORTABLE TOILETS BE LOCATED WITHIN A WETLAND RESOURCE AREA OR WITHIN THE 100-FOOT BUFFER ZONE.
12. UPON THE COMPLETION OF THE PROJECT, THE CONTRACTOR SHALL SUBMIT A RECORD PLAN PREPARED BY A PROFESSIONAL LAND SURVEYOR TO THE TOWNS OF ACTON/STOW.

SITE PREPARATION NOTES
1. THE LIMIT OF WORK SHALL BE MARKED OUT IN THE FIELD PRIOR TO THE START OF CONSTRUCTION OR SITE CLEARING.
2. NO WORK IS ALLOWED ON APN MAP R31 LOTS 4 AND 5 AT ANY TIME, EXCEPT FOR WHAT IS SHOWN ON THESE PLANS.
3. AREAS DESIGNATED FOR CLEARING SHALL BE CLEARED, GRUBBED AND STRIPPED OF TOPSOIL. TOPSOIL SHALL BE STOCKPILED. ALL TREES, VEGETATION, ROOTS AND OTHER UNACCEPTABLE MATERIAL SHALL BE REMOVED. THESE ARE THE ONLY AREAS TO BE STRIPPED OF TOPSOIL.
4. THE SUBCONTRACTOR(S) IS/ARE RESPONSIBLE FOR ANY DAMAGE TO EXISTING CONDITIONS TO REMAIN THAT ARE DUE TO SUBCONTRACTOR(S) OPERATIONS.
5. ITEMS TO BE REMOVED THAT ARE NOT STOCKPILED FOR LATER REUSE ON THE PROJECT OR DELIVERED TO THE OWNER SHALL BE LEGALLY DISPOSED OF OFF SITE BY THE SUBCONTRACTOR(S).
6. NO DEBRIS, JUNK, RUBBISH OR OTHER NON-BIODEGRADEABLE WASTE MATERIALS SHALL BE BURIED ON SITE OR LEFT ON ANY LOT OR PUBLIC STREET. REMOVAL OF SHALL BE REQUIRED PRIOR TO ANY RELEASE OF THE BUILDING PERMIT CERTIFICATE OF COMPLETION. BURIAL OF BIO-DEGRADEABLE MATERIALS ON THE SITE SHALL BE SUBJECT TO THE TOWN OF STOW BOARD OF HEALTH. THE BURIAL LOCATION AND DESCRIPTION OF BURIED MATERIALS SHALL BE NOTED ON THE RECORD PLANS.
7. THE SUBCONTRACTOR(S) SHALL BE RESPONSIBLE FOR COORDINATING THEIR EFFORTS WITH ALL TRADES.
8. SHALL COORDINATE ALL ADJUSTMENT OR ABANDONMENT OF UTILITIES WITH THE RESPECTIVE UTILITY COMPANY.
9. THE SUBCONTRACTOR(S) SHALL MAINTAIN OR ADJUST TO NEW FINISH GRADE AS NECESSARY ALL UTILITY AND SITE STRUCTURES SUCH AS LIGHT POLES, SIGN POLES, MAN HOLES, CATCH BASINS HAND HOLES, WATER AND GAS GATES, HYDRANTS, ETC., FROM MAINTAINED UTILITY AND SITE SYSTEMS UNLESS OTHERWISE NOTED OR DIRECTED BY THE CONTRACTOR/CEOR.
10. TEMPORARY CONSTRUCTION HAUL ROADS (IF REQUIRED) SHALL BE EXCAVATED AND THE SUB-BASE COMPACTED TO 95% SPMDD. THE USE OF SEPARATION FABRICS MAY BE USED TO FACILITATE FUTURE REMOVAL AND RECOVERY OF GRANULAR MATERIALS. HAUL ROAD SHALL HAVE AT LEAST 9" OF 6-INCH MINUS STONE AND SHALL BE MAINTAINED DURING CONSTRUCTION.

EROSION AND SEDIMENT CONTROL MEASURES
1. EROSION CONTROL SHALL BE PROVIDED IN ACCORDANCE WITH THE SEQUENCE OF CONSTRUCTION DESCRIBED ON THIS SHEET. A COPY OF THE APPROVED EROSION AND SEDIMENT CONTROL PLAN SHALL BE MAINTAINED ON THE SITE.
2. ALL EROSION AND SEDIMENTATION CONTROL MEASURES SHALL BE INSTALLED PRIOR TO ANY SITE EXCAVATION OR DISTURBANCE AND SHALL BE MAINTAINED THROUGHOUT THE CONSTRUCTION PROCESS. THE SMALLEST PRACTICAL AREA OF LAND SHALL BE EXPOSED AT ANY ONE TIME.
3. STRAW BALE BARRIERS AND SILTATION FENCES ARE TO BE MAINTAINED AND CLEANED UNTIL ALL SLOPES HAVE BEEN STABILIZED.
4. SEDIMENT BARRIERS SHALL BE INSPECTED AND APPROVED BY THE TOWNS OF ACTON AND STOW (IN THEIR JURISDICTIONS) AND THE CONTRACTOR/CEOR BEFORE CONSTRUCTION CAN START.
5. STRAW BALES AND MULCH SHALL BE MOWINGS OF ACCEPTABLE HERBACEOUS GROWTH, FREE OF NOXIOUS WEEDS OR WOODY STEMS, AND SHALL BE DRY WHEN INSTALLED.
6. THE UNDERSIDE OF STRAW BALES SHOULD BE KEPT IN CLOSE CONTACT (TRENCHED IN 3-INCHES MINIMUM) WITH THE EARTH AND RESET AS NECESSARY.
7. DISTURBED AREAS SHALL BE BLANKETED OR SEEDED AND MULCHED AS SOON AS PRACTICAL AFTER CONSTRUCTION ACTIVITIES IN THAT AREA HAVE CONCLUDED. ALL ERODABLE/BARE AREAS SHALL BE BLANKETED OR SEEDED AND MULCHED WITHIN 7 DAYS WITH TEMPORARY EROSION CONTROL SEEDING.
8. STABILIZE SLOPES GREATER THAN 3:1 (HORIZONTAL:VERTICAL) WITH SEED, SECURED GEOTEXTILE FABRIC, SPRAYED COMPOST BLANKET, OR RIP-RAP AS REQUIRED TO PREVENT EROSION DURING CONSTRUCTION.
9. SEDIMENT BARRIERS SHALL BE CONSTRUCTED AROUND ALL SOIL STOCKPILE AREAS.
10. CLEAN OUT DRAINAGE FEATURES AND STRUCTURES AFTER COMPLETION OF CONSTRUCTION.
11. SEDIMENT COLLECTED DURING CONSTRUCTION BY THE VARIOUS TEMPORARY EROSION CONTROL SYSTEMS SHALL BE DISPOSED OF ON THE SITE ON A REGULAR BASIS. SEDIMENT SHALL BE REMOVED FROM EROSION CONTROL SYSTEMS WHEN THE HEIGHT OF THE SEDIMENT EXCEEDS ONE-HALF OF THE HEIGHT OF THE SEDIMENT CONTROL MEASURE.
12. THE BOTTOM OF SEDIMENTATION BASINS (IF ANY) SHALL BE PERIODICALLY CLEANED PER THE DIRECTION OF THE CONTRACTOR/CEOR. THE SUBCONTRACTOR(S) SHALL DISPOSE OF SEDIMENT PROPERLY.
13. AFTER ALL DISTURBED AREAS HAVE BEEN STABILIZED, THE SUBCONTRACTOR(S) SHALL REMOVE ALL TEMPORARY EROSION CONTROL MEASURES AT THE CONTRACTOR/CEOR DIRECTION.
14. AFTER THE REMOVAL OF TEMPORARY EROSION CONTROL MEASURES, THE SUBCONTRACTOR(S) SHALL GRADE AND SEED AREA OF TEMPORARY EROSION CONTROL MEASURE.
15. DAMAGED OR DETERIORATED ITEMS WILL BE REPAIRED IMMEDIATELY AFTER IDENTIFICATION OR AS DIRECTED BY THE CONTRACTOR/CEOR.
16. THE CONTRACTOR'S SITE SUPERINTENDENT WILL IS RESPONSIBLE FOR DAILY INSPECTIONS, MAINTENANCE, AND REPAIR ACTIVITIES. THE CONTRACTOR SHALL INSPECT EROSION CONTROL MEASURES EVERY SEVEN (7) CALENDAR DAYS OR ONCE EVERY FOURTEEN (14) DAYS AND WITHIN 24 HOURS OF ANY STORM EXCEEDING 1/2 INCH PRECIPITATION. DAMAGED AND INEFFECTIVE EROSION CONTROL MEASURES SHALL BE REPAIRED OR REPLACED WITHIN 48 HOURS.
17. PIPE OUTLETS (IF ANY) SHALL BE STABILIZED WITH STONE.
18. TEMPORARY SEEDING SHALL BE AT A RATE OF 45 LBS PER ACRE. ERODABLE AREAS OUTSIDE AND DOWN SLOPE FROM THE CONSTRUCTION LIMITS SHALL BE SIMILARLY SEEDED. REFER TO REVEGETATION PLAN FOR SEEDING SPECIFICATIONS.
19. WATER PUMPED OR OTHERWISE DISCHARGED FROM THE SITE DURING CONSTRUCTION DEWATERING SHALL BE FILTERED. DEWATERING PLAN SHALL BE SUBMITTED FOR APPROVAL BY THE CEOR.
20. WHEN TEMPORARY DRAINAGE IS ESTABLISHED, EROSION/SEDIMENTATION CONTROL MEASURES MAY BE REQUIRED BY CONTRACTOR/CEOR.
21. GRAVEL ROADS, ACCESS DRIVES, PARKING AREAS OF SUFFICIENT WIDTH AND LENGTH, AND VEHICLE WASH DOWN FACILITIES, SHALL BE PROVIDED TO PREVENT SOIL FROM BEING TRACKED ONTO PUBLIC OR PRIVATE ROADWAYS. ANY SOIL REACHING A PUBLIC OR PRIVATE ROADWAY SHALL BE REMOVED BEFORE THE END OF EACH WORKDAY AND AS NEEDED.
22. NECESSARY MEASURES SHALL BE TAKEN TO CONTAIN ANY FUEL OR POLLUTION RUNOFF. LEAKING EQUIPMENT OR SUPPLIES SHALL BE IMMEDIATELY REPAIRED OR REMOVED FROM THE SITE.
23. THE COST OF REPAIRING OR REMOVING SEDIMENT FROM EROSION CONTROL SYSTEMS SHALL BE INCLUDED IN THE CONTRACT UNIT PRICE FOR THE APPLICABLE EROSION CONTROL ITEM.
24. ALL EROSION CONTROL MEASURES SHALL BE KEPT OPERATIONAL AND MAINTAINED CONTINUOUSLY THROUGHOUT THE PERIOD OF LAND DISTURBANCE UNTIL PERMANENT SEDIMENT AND EROSION CONTROL MEASURES ARE OPERATIONAL. CONTRACTOR SHALL PROVIDE TO THE CONSERVATION COMMISSION MEASURES (EROSION AND SEDIMENTATON CONTROL) FOR WORK DURING WINTER CONDITIONS.
25. CONTRACTOR SHALL SPRAY WATER FROM A WATER TRUCK ON DRY AND WINDY DAYS TO PREVENT DUST FROM FORMING.
26. EROSION CONTROL MEASURES AS SHOWN ON THESE DRAWINGS IS INTENDED TO CONVEY MINIMUM REQUIREMENTS. THE CONTRACTOR SHALL IMPLEMENT ADDITIONAL MEASURES AS NECESSARY TO PREVENT SOIL EROSION AND TO COMPLY WITH THE PROJECT'S STORMWATER POLLUTION PREVENTION PLAN.
27. SOILS ON SLOPES THAT ARE 3:1 OR STEEPER SHOULD BE ROUGHENED PER THE EPA'S NPDES SOIL ROUGHENING FACT SHEET IF THEY ARE TO BE SEEDED WITHIN 2 WEEKS OF DISTURBANCE. IF NOT, EROSION CONTROL BLANKETS SHOULD BE INSTALLED ON THESE SLOPES.

LAYOUT AND MATERIAL NOTES
1. THE FOLLOWING LAYOUT CRITERIA SHALL CONTROL UNLESS OTHERWISE NOTED ON THE PLAN:
   a. ALL TIES TO PROPERTY LINES ARE PERPENDICULAR TO THE PROPERTY LINE UNLESS OTHERWISE NOTED.
   b. ALL DIMENSIONS TO RACKING SHALL BE TO TOP OF SOLAR PANEL OR LEADING EDGE.
   c. DISTANCES AND DIMENSIONS ARE IN DECIMAL FEET
2. SCREENED IMAGES SHOW EXISTING CONDITIONS. WHERE EXISTING CONDITIONS LIE UNDER OR ARE IMPINGED UPON BY PROPOSED BUILDINGS AND/OR SITE ELEMENTS, THE EXISTING CONDITION WILL BE REMOVED, ABANDONED AND/OR CAPPED OR DEMOLISHED AS REQUIRED. AMBIGUITIES IN THE PLANS SHALL BE CLARIFIED BY THE CEOR OR SITE SUPERINTENDENT.
3. THE CONTRACTOR SHALL HAVE ELECTRICAL TRENCHES AND RACKING STAKED OUT BY A LICENSED LAND SURVEYOR PRIOR TO ANY INSTALLATION OF RACKING OR TRENCHES.
4. EXCESS TRENCH MATERIAL SHALL BE PLACED ON THE SIDES OF THE TRENCH AND PLACED AT OR NEAR THE SAME LOCATION AS WHERE EXCAVATED. TOPSOIL REMOVED SHALL BE PLACED ON TOP AND LIGHTLY COMPACTED.

GRADING AND UTILITY NOTES
1. HAULING OF EARTH TO OR FROM THE SITE IS RESTRICTED TO BETWEEN THE HOURS OF 9 a.m. AND 4 p.m. ON WEEKDAYS.
2. PRIOR TO THE START OF ANY EXCAVATION FOR THE PROJECT, BOTH ON AND OFF THE SITE, THE CONTRACTOR SHALL NOTIFY DIGSAFE AND BE PROVIDED WITH A DIGSAFE NUMBER INDICATING THAT ALL EXISTING UTILITIES HAVE BEEN LOCATED AND MARKED.
3. THE LOCATIONS OF EXISTING UNDERGROUND UTILITIES ARE SHOWN IN AN APPROXIMATE WAY ONLY AND HAVE NOT BEEN INDEPENDENTLY VERIFIED BY THE CONTRACOTR. THE SUBCONTRACTOR(S) SHALL DETERMINE THE EXACT LOCATION OF ALL EXISTING UTILITIES BEFORE COMMENCING WORK, AND AGREES TO BE FULLY RESPONSIBLE FOR ANY AND ALL DAMAGES WHICH MAY BE OCCASIONED BY THE CONTRACTOR'S FAILURE TO EXACTLY LOCATE AND PRESERVE ALL UNDERGROUND UTILITIES.
4. WHERE AN EXISTING UTILITY IS FOUND TO CONFLICT WITH THE PROPOSED WORK, THE LOCATION, ELEVATION, AND SIZE OF THE UTILITY SHALL BE ACCURATELY DETERMINED WITHOUT DELAY BY THE SUBCONTRACTOR(S), AND THE INFORMATION FURNISHED TO THE CONTRACTOR/CEOR FOR RESOLUTION OF THE CONFLICT.
5. UTILITY-OWNED EQUIPMENT ON ELECTRIC POLES TO BE INSTALLED WILL CONSIST OF A LOAD-BREAK DISCONNECT, RECLOSER, AND METERING EQUIPMENT. UTILITY SHALL OVERSEE THE PERMITTING OF THE EQUIPMENT. SEE PLANS FOR DETAILS OF INSTALLATION AND LAYOUT OF UTILITY-OWNED POLES.
6. THE CONTRACTOR SHALL MAKE ALL ARRANGEMENTS FOR THE ALTERATION AND ADJUSTMENT OF ALL GAS, ELECTRIC, TELEPHONE, AND ANY OTHER PRIVATE UTILITIES BY THE UTILITY COMPANIES.
7. AREAS OUTSIDE THE LIMITS OF PROPOSED WORK DISTURBED BY THE SUBCONTRACTOR(S) OPERATIONS SHALL BE RESTORED BY THE SUBCONTRACTOR(S) TO THEIR ORIGINAL CONDITION, AT THE SUBCONTRACTOR(S) EXPENSE.
8. THE LOCATION, SIZE, DEPTH, AND SPECIFICATIONS FOR CONSTRUCTION OF PRIVATE UTILITY SERVICES SHALL BE INSTALLED ACCORDING TO THE REQUIREMENTS PROVIDED BY, AND APPROVED BY, THE RESPECTIVE ELECTRIC UTILITY COMPANY. THE CONTRACTOR SHALL COORDINATE THE INSTALLATION OF THE UTILITY CONNECTIONS WITH THE RESPECTIVE COMPANIES PRIOR TO ANY UTILITY CONSTRUCTION.
9. WHERE PROPOSED GRADES MEET EXISTING GRADES, SUBCONTRACTOR(S) SHALL BLEND GRADES TO PROVIDE A SMOOTH TRANSITION BETWEEN EXISTING AND NEW WORK. PONDING AT TRANSITION AREAS WILL NOT BE ALLOWED.
10. SUBCONTRACTOR(S) SHALL MAINTAIN POSITIVE DRAINAGE AWAY FROM ALL STRUCTURES.
11. MAXIMUM SLOPES SHALL NOT EXCEED 10:1 ALONG GRAVEL ROADS AND WITHIN FENCED SOLAR ARRAY AREAS, AND 3:1 IN ALL OTHER DISTURBED AREAS, UNLESS OTHERWISE NOTED.
12. SUBCONTRACTOR(S) SHALL VERIFY EXISTING GRADES AND NOTIFY THE CONTRACTOR/CEOR OF ANY DISCREPANCIES.

PLANTING NOTES
1. CONTRACTOR SHALL BEGIN MAINTENANCE IMMEDIATELY AFTER PLANTING AND WILL CONTINUE UNTIL FINAL WRITTEN ACCEPTANCE OF PLANT MATERIAL.
2. CONTRACTOR SHALL MAINTAIN POSITIVE DRAINAGE AWAY FROM ALL BUILDING FOUNDATIONS AND STRUCTURES.
3. MAXIMUM SLOPE WITHIN DISTURBED AREAS SHALL NOT EXCEED 3:1, UNLESS OTHERWISE NOTED.
4. THE LANDSCAPE CONTRACTOR SHALL SUPPLY ALL PLANT MATERIALS IN QUANTITIES SUFFICIENT TO COMPLETE ALL PLANTINGS SHOWN ON THE DRAWINGS.
5. ALL MATERIALS SHALL CONFORM TO THE GUIDELINES ESTABLISHED BY THE AMERICAN NURSERY AND LANDSCAPE ASSOCIATION.
6. ALL PLANTS SHALL BEAR THE SAME RELATIONSHIP TO FINISH GRADE AS TO ORIGINAL GRADES BEFORE DIGGING.
7. ALL PLANTS TO BE BALLED IN BURLAP OR CONTAINERIZED.
8. ALL AREAS PLANTED WITH EVERGREEN TREES SHALL BE COVERED WITH A MINIMUM 3" OF MULCH. MULCH FOR PLANTED AREAS TO BE AGED PINE BARK: PARTIALLY DECOMPOSED, DARK BROWN IN COLOR AND FREE OF WOOD CHIPS THICKER THAN 1/4 INCH.
9. THE LANDSCAPE CONTRACTOR SHALL GUARANTEE ALL PLANT MATERIALS FOR ONE (1) FULL YEAR FROM DATE OF ACCEPTANCE.
10. ALL PLANT MATERIALS ARE SUBJECT TO THE APPROVAL OF THE CONTRACTOR/CEOR, AT THE NURSERY, AND AT THE SITE.
11. THE CONTRACTOR SHALL COLLECT A MINIMUM OF ONE SOIL SAMPLE PER ACRE FOR TOPSOIL ANALYSIS. SOIL SAMPLES LOCATIONS SHALL BE EVENLY DISTRIBUTED WITHIN THE LIMIT OF WORK, AND EACH SAMPLE SHALL BE TESTED SEPARATELY. THE SOIL ANALYSES SHALL BE PERFORMED BY A QUALIFIED SOIL-TESTING LABORATORY. THE ANALYSIS REPORT SHALL INCLUDE RECOMMENDED QUANTITIES OF NITROGEN, PHOSPHORUS, AND POTASH NUTRIENTS AND SOIL AMENDMENTS TO BE ADDED TO PRODUCE SATISFACTORY TOPSOIL FOR LAWN GROWTH. TOPSOIL FOR AREAS SEEDED SHALL HAVE THE FOLLOWING MINIMUM CHARACTERISTICS:

   DEPTH = 3" MIN. /PH = 5.5 TO 7 / ORGANIC MATTER = 3.5% MINIMUM

   SAND = 40-70% / SILT = 20-40% / CLAY = 5-20%

   TOPSOIL ANALYSIS REPORTS THAT DO NOT MEET THESE MINIMUM REQUIREMENTS SHALL BE SUBMITTED TO THE OWNER REPRESENTATIVE FOR REVIEW.

CONSTRUCTION SEQUENCE:
1. INSTALL EROSION CONTROL MEASURES (SILT FENCE/FILTER SOCKS) ALONG EX. ROAD AND UTILITY INTERCONNECTION ROUTE.
2. ACTON/STOW TO REVIEW EROSION CONTROL MEASURES
3. CLEAR TREES AND REMOVE/GRIND STUMPS AND CONSTRUCT WOOD STRAND BERMS ON 50 % OF SITE.
4. CONSTRUCT ACCESS ROAD INTO SITE.
5. GRADE 50% OF SITE CLEARED/GRUBBED
6. PLACE BFM (BONDED FIBER MATRIX) OR HYDROSEED AND MULCH WITH HAY (4 TONS/ACRE) ON 50% DISTURBED AREA.
7. COMMENCE INSTALLATION OF RACKING SCREWS/PILES.
8. COMMENCE ITEMS 3-6 ABOVE ON REMAINING 50% OF THE SITE.
9. INSTALL RACKING/MODULES
10. EXCAVATE ELECTRICAL TRENCH, UTILITY POLES, ETC.
11. INSTALL ELECTRICAL EQUIPMENT AREAS.
12. INSTALL FENCING
13. HYDROSEED DISTURBED AREAS AS NEEDED
14. DRESS UP GRAVEL ROAD

ABBREVIATIONS

BC	BOTTOM OF CURB
BVW	BORDERING VEGETATED WETLANDS
CB	CATCH BASIN
CLF	CHAIN LINK FENCE
DIP	DUCTILE IRON PIPE
DMH	DRAIN MANHOLE
ECB	EROSION CONTROL BARRIER
FES	FLARED END SECTION
FH	FIRE HYDRANT
FOC	FACE OF CURB
GG	GAS GATE
HW	HEADWALL
ILSF	ISOLATED LANDS SUBJECT TO FLOODING
ISW	ISOLATED WETLANDS (FEDERAL JURISDICTION)
LA	LANDSCAPED AREA
LOW	LIMIT OF WORK
NTS	NOT TO SCALE
OCS	OUTLET CONTROL STRUCTURE
PCC	PRECAST CONCRETE CURB
RCP	REINFORCED CONCRETE PIPE
SLC	STREET LIGHT CIRCUIT
SMH	SEWER MANHOLE
TC	TOP OF CURB
TEL	TELEPHONE CABLE
VGC	VERTICAL GRANITE CURB
WG	WATER GATE

REV 1.0

LEGEND

SOLAR MODULES
ROAD (GRAVEL)
FENCE LINE
PROPERTY LINE
FLOW DIRECTION
BANK LINE/FLAG
WETLAND LINE/FLAG
(E) MAJOR CONTOUR
(E) MINOR CONTOUR
PROPOSED MAJOR CONTOUR
PROPOSED MINOR CONTOUR
100' WETLAND BUFFER ZONE
200' RIVERFRONT AREA
100-YEAR FLOOD LINE
WATER RESOURCE OVERLAY DISTRICT
EDGE OF WATER
TREELINE
STONE WALL
SILT FENCE
LIMIT OF WORK
DRAIN PIPE
ELECTRICAL TRENCH
OVERHEAD ELECTRIC
SEWER LINE
WATER LINE
GAS MAIN

	OMITTED MODULE		ASSESSORS MAP-LOT
	SPARE MODULE	CB/DH	CONCRETE BOUNDDRILL/HOLE
	NON-ACTIVE MODULE	DH	DRILLHOLE
SB/DH	STONE BOUND DRILL/HOLE	FND	FOUND
N/F	NOW OR FORMERLY	CMP	CORRUGATED METAL PIPE
IP	IRON PIPE	BIT CONC	BITUMINOUS CONCRETE
		RET WALL	RETAINING WALL

THIS DOCUMENT IS PROVIDED BY BORREGO SOLAR SYSTEMS INC. TO FACILITATE THE SALE AND INSTALLATION OF A SOLAR POWER SYSTEM FROM BORREGO SOLAR SYSTEMS. REPRODUCTION, RELEASE OR UTILIZATION FOR ANY OTHER PURPOSE, WITHOUT PRIOR WRITTEN CONSENT IS STRICTLY PROHIBITED.

BORREGO SOLAR
55 TECHNOLOGY DRIVE, SUITE 102
LOWELL, MA 01851
PHONE: (888) 898-6273
FAX: (888) 843-6778
WWW.BORREGOSOLAR.COM

NOT FOR CONSTRUCTION

COMMONWEALTH OF MASSACHUSETTS
DAVID M. ALBRECHT
CIVIL
NO 37310
REGISTERED PROFESSIONAL ENGINEER
4-4-16

SITE USE PLANS
2798.82 kW SOLAR ENERGY SYSTEM
0 SOUTH ACTON ROAD REAR STOW, MA 01775
127 STOW STREET ACTON, MA 01720

PROJECT NUMBER:
XXX-XXXX

REV	DATE	DRAWN	CHECKED	RELEASE LEVEL
	2/29/16	FR	DA	SUBMISSIONS TO ACTON/STOW
1	3/10/16	DA	DA	RESUBMIT TO STOW CONCOM
2	4/04/16	DA	DA	RESUBMIT TO STOW PLANNING BOARD
3	4/08/16	DA	DA	ACTON CONCOM MODIFICATIONS

SCALES STATED ON DRAWINGS ARE VALID ONLY WHEN PLOTTED ARCH D 24" X 36"

C-0.0
CIVIL NOTES

C:\Users\dalbrecht\Box Sync\Salesforce\Projects\127 Stow Street - Acton\Design\Working Set\127_Stow-SUP-04-07-16_DA_In_Progress

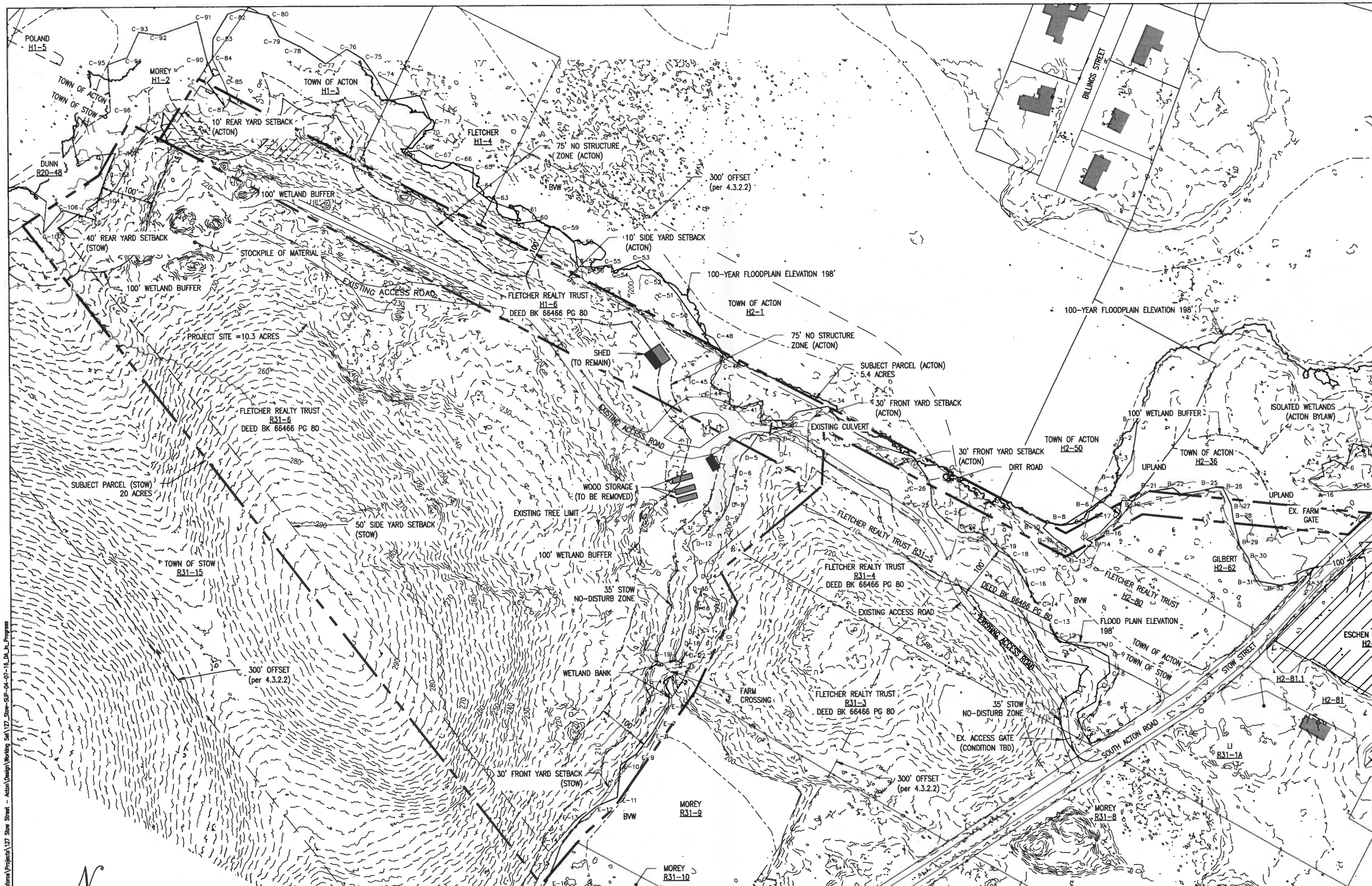

EXISTING CONDITIONS PLAN

SCALE: 1"=80'

0 80' 160'

THIS DOCUMENT IS PROVIDED BY BORREGO SOLAR SYSTEMS INC. TO FACILITATE THE SALE AND INSTALLATION OF A SOLAR POWER SYSTEM FROM BORREGO SOLAR SYSTEMS. REPRODUCTION, RELEASE, OR UTILIZATION FOR ANY OTHER PURPOSE, WITHOUT PRIOR WRITTEN CONSENT IS STRICTLY PROHIBITED.

BORREGO SOLAR
55 TECHNOLOGY DRIVE, SUITE 102
LOWELL, MA 01851
PHONE: (888) 886-8273
FAX: (888) 843-6778
WWW.BORREGOSOLAR.COM

NOT FOR CONSTRUCTION

DAVID M. ALBRECHT
CIVIL
NO. 37313
COMMONWEALTH OF MASSACHUSETTS
4-4-16

SITE USE PLANS
2798.82 kW SOLAR ENERGY SYSTEM
0 SOUTH ACTON ROAD REAR STOW, MA 01775
127 STOW STREET ACTON, MA 01720

PROJECT NUMBER:
XXX-XXXX

REV	DATE	DRAWN	CHECKED	RELEASE LEVEL
	2/29/16	FR	DA	SUBMISSIONS TO ACTON/STOW
1	3/10/16	DA	DA	RESUBMIT TO STOW CONCOM
2	4/04/16	DA	DA	RESUBMIT TO STOW PLANNING BOARD
3	4/08/16	DA	DA	ACTON CONCOM MODIFICATIONS

SCALES STATED ON DRAWINGS ARE VALID ONLY WHEN PLOTTED ARCH D 24" X 36"

C-1.0
EXISTING CONDITIONS PLAN

C:\Users\dalbrecht\Box Sync\Salesforce\Projects\127 Stow Street - Acton\Design\Working Set\127_Stow-SUP-04-07-16_DA_In_Progress

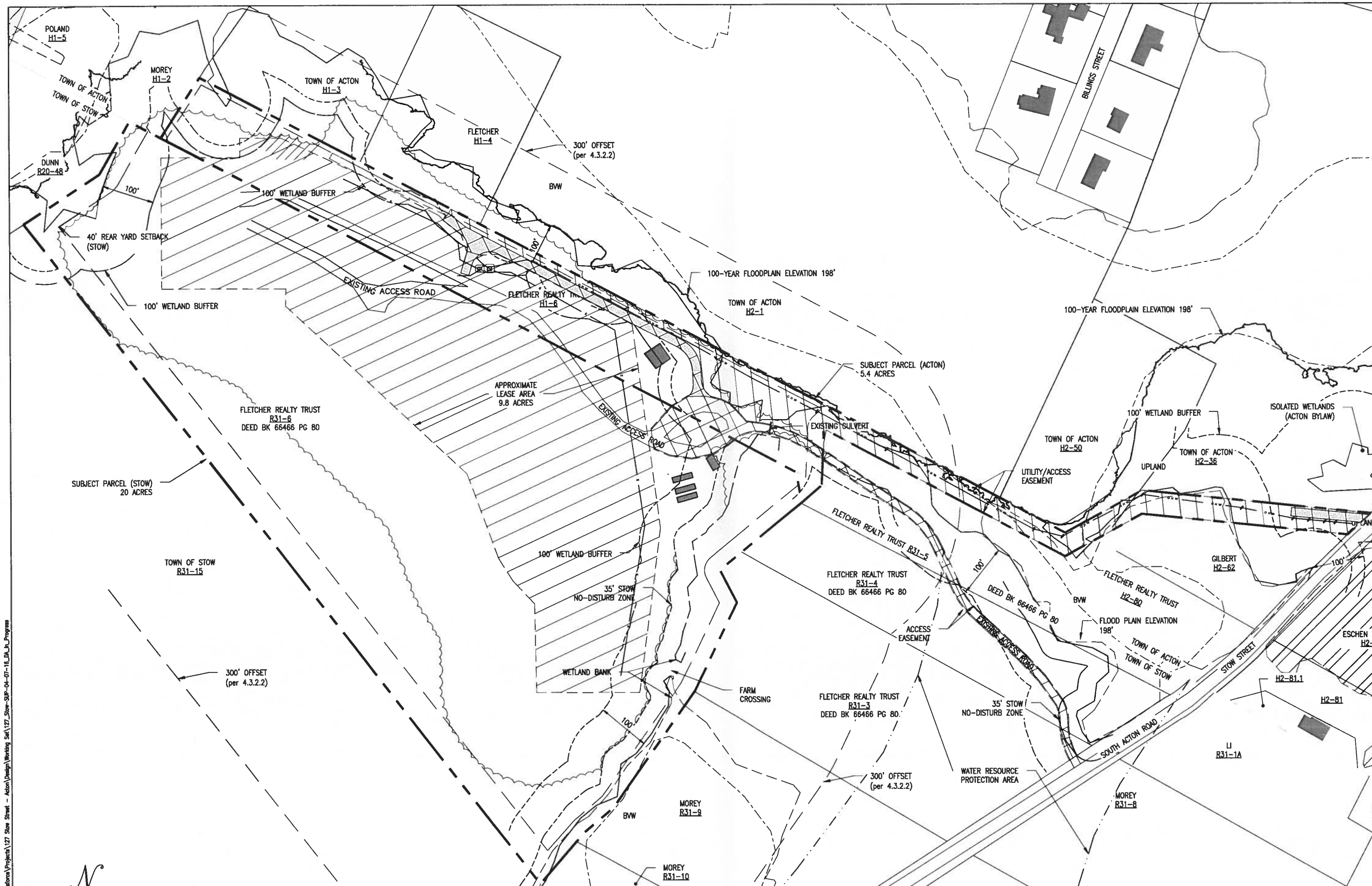

LEASE-OVERLAY DISTRICTS PLAN

SCALE: 1"=80'

0 80' 160'

THIS DOCUMENT IS PROVIDED BY BORREGO SOLAR SYSTEMS INC. TO FACILITATE THE SALE AND INSTALLATION OF A SOLAR POWER SYSTEM FROM BORREGO SOLAR SYSTEMS. REPRODUCTION, RELEASE OR UTILIZATION FOR ANY OTHER PURPOSE, WITHOUT PRIOR WRITTEN CONSENT IS STRICTLY PROHIBITED.

BORREGO SOLAR
55 TECHNOLOGY DRIVE, SUITE 102
LOWELL, MA 01851
PHONE: (866) 698-6273
FAX: (866) 843-6776
WWW.BORREGOSOLAR.COM

NOT FOR CONSTRUCTION

COMMONWEALTH OF MASSACHUSETTS
DAVID M. ALBRECHT
No. 37313
REGISTERED PROFESSIONAL ENGINEER
4-4-16

SITE USE PLANS
2798.82 kW SOLAR ENERGY SYSTEM
0 SOUTH ACTON ROAD REAR STOW, MA 01775
127 STOW STREET ACTON, MA 01720

PROJECT NUMBER:
XXX-XXXX

REV	DATE	DRAWN	CHECKED	RELEASE LEVEL
	2/29/16	FR	DA	SUBMISSIONS TO ACTON/STOW
1	3/10/16	DA	DA	RESUBMIT TO STOW CONCOM
2	4/04/16	DA	DA	RESUBMIT TO STOW PLANNING BOARD
3	4/08/16	DA	DA	ACTON CONCOM MODIFICATIONS

SCALES STATED ON DRAWINGS ARE VALID ONLY WHEN PLOTTED ARCH D 24" X 36"

C-1.1
LEASE-OVERLAY DISTRICTS PLAN

C:\Users\dalbrecht\Box Sync\Salesforce\Projects\127 Stow Street - Acton\Design\Working Set\127_Stow-SUP-04-07-16_DA_In_Progress

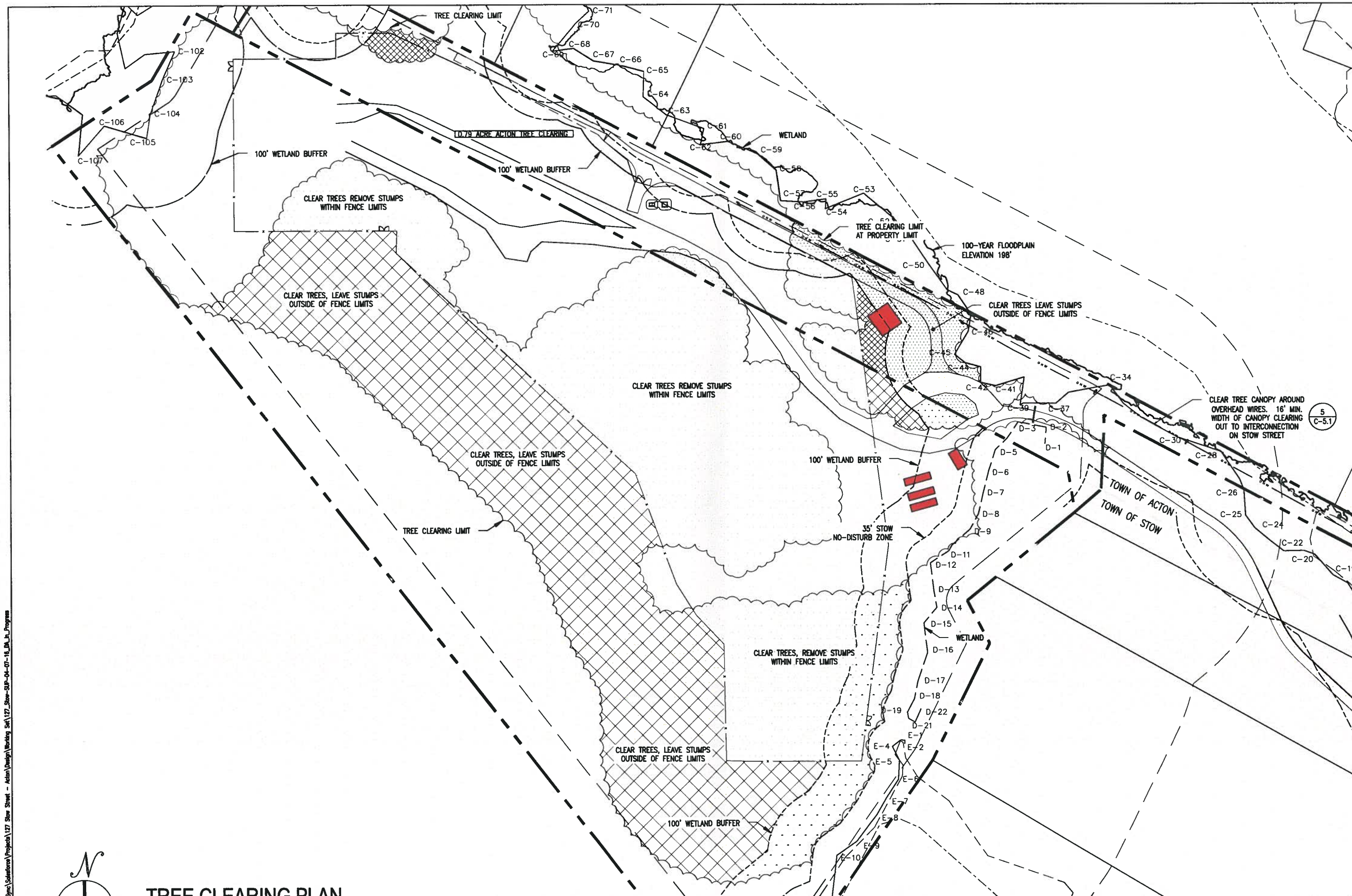

TREE CLEARING PLAN

SCALE: 1"=60'

0 60' 120'

THIS DOCUMENT IS PROVIDED BY BORREGO SOLAR SYSTEMS INC. TO FACILITATE THE SALE AND INSTALLATION OF A SOLAR POWER SYSTEM FROM BORREGO SOLAR SYSTEMS. REPRODUCTION, RELEASE OR UTILIZATION FOR ANY OTHER PURPOSE, WITHOUT PRIOR WRITTEN CONSENT IS STRICTLY PROHIBITED.

BORREGO SOLAR
55 TECHNOLOGY DRIVE, SUITE 102
LOWELL, MA 01851
PHONE: (888) 896-6273
FAX: (888) 843-6778
WWW.BORREGOSOLAR.COM

NOT FOR CONSTRUCTION

COMMONWEALTH OF MASSACHUSETTS
DAVIDM ALBRECHT
CIVIL
No. 37313
PROFESSIONAL ENGINEER
4-4-16

SITE USE PLANS
2798.82 kW SOLAR ENERGY SYSTEM
0 SOUTH ACTON ROAD REAR STOW, MA 01775
127 STOW STREET ACTON, MA 01720

PROJECT NUMBER:
XXX-XXXX

REV	DATE	DRAWN	CHECKED	RELEASE LEVEL
	2/29/16	FR	DA	SUBMISSIONS TO ACTON/STOW
1	3/10/16	DA	DA	RESUBMIT TO STOW CONCOM
2	4/04/16	DA	DA	RESUBMIT TO STOW PLANNING BOARD

SCALES STATED ON DRAWINGS ARE VALID ONLY WHEN PLOTTED ARCH D 24" X 36"

C-2.0
TREE CLEARING PLAN

C:\Users\dalbrecht\Box Sync\Solarforce\Projects\127 Stow Street - Acton\Design\Working Set\127_Stow-SUP-04-07-16_DA_In_Progress

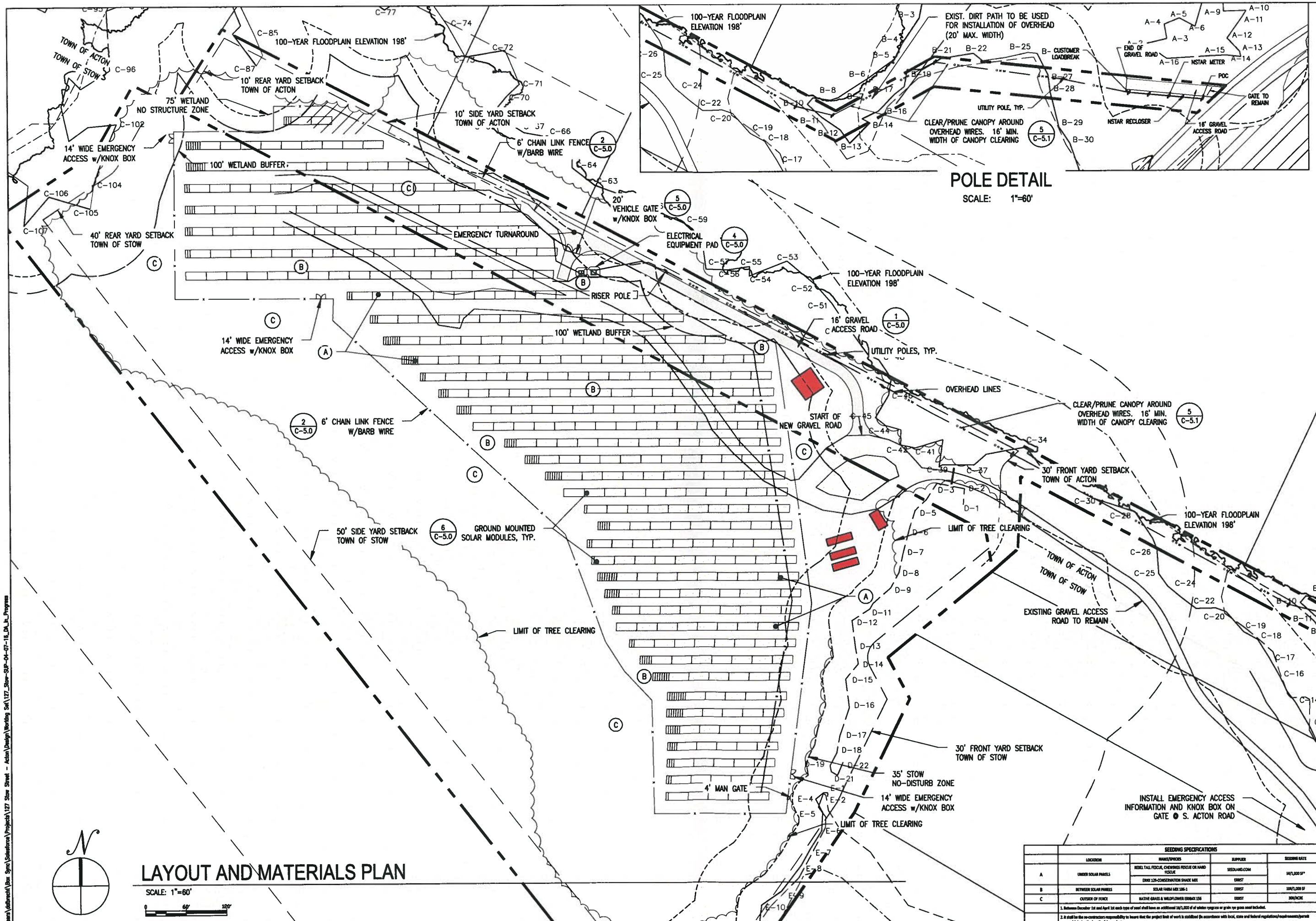

	SEEDING SPECIFICATIONS			
	LOCATION	NAME/SPECIES	SUPPLIER	SEEDING RATE
A	UNDER SOLAR PANELS	REBEL TALL FESCUE, CHEWINGS FESCUE OR HARD FESCUE	SEEDLAND.COM	50/1,000 SF*
		ERRX 129-CONSERVATION SHADE MIX	ERRST	
B	BETWEEN SOLAR PANELS	SOLAR FARM MIX 186-1	ERRST	100/1,000 SF
C	OUTSIDE OF FENCE	NATIVE GRASS & WILDFLOWER ERRMIX 156	ERRST	300/ACRE

1. Between December 1st and April 1st each type of seed shall have an additional 10/1,000 sf of winter ryegrass or grain rye grass seed included.

2. It shall be the no-contractors responsibility to insure that the project limit of work is stabilized (in accordance with local, state and federal regulations/requirements/permit approvals) during the length of the project.

THIS DOCUMENT IS PROVIDED BY BORREGO SOLAR SYSTEMS INC. TO FACILITATE THE SALE AND INSTALLATION OF A SOLAR POWER SYSTEM FROM BORREGO SOLAR SYSTEMS. REPRODUCTION, RELEASE OR UTILIZATION FOR ANY OTHER PURPOSE, WITHOUT PRIOR WRITTEN CONSENT IS STRICTLY PROHIBITED.

BORREGO SOLAR
55 TECHNOLOGY DRIVE, SUITE 102
LOWELL, MA 01851
PHONE: (888) 888-6273
FAX: (888) 843-6778
WWW.BORREGOSOLAR.COM

NOT FOR CONSTRUCTION

DAVID M. ALBRECHT
CIVIL
NO. 37210
COMMONWEALTH OF MASSACHUSETTS
REGISTERED PROFESSIONAL ENGINEER
4-4-16

SITE USE PLANS
2798.82 kW SOLAR ENERGY SYSTEM
0 SOUTH ACTON ROAD REAR STOW, MA 01775
127 STOW STREET ACTON, MA 01720

PROJECT NUMBER: XXX-XXXX

REV	DATE	DRAWN	CHECKED	RELEASE LEVEL
	2/29/16	FR	DA	SUBMISSIONS TO ACTON/STOW
1	3/10/16	DA	DA	RESUBMIT TO STOW CONCOM
2	4/04/16	DA	DA	RESUBMIT TO STOW PLANNING BOARD
3	4/08/16	DA	DA	ACTON CONCOM MODIFICATIONS

SCALES STATED ON DRAWINGS ARE VALID ONLY WHEN PLOTTED ARCH D 24" X 36"

C-3.0
LAYOUT AND MATERIALS PLAN

C:\Users\dalbrecht\Box Sync\Solarforce\Projects\127 Stow Street - Acton\Design\Working Set\127_Stow-SUP-04-07-16_DA_In_Progress

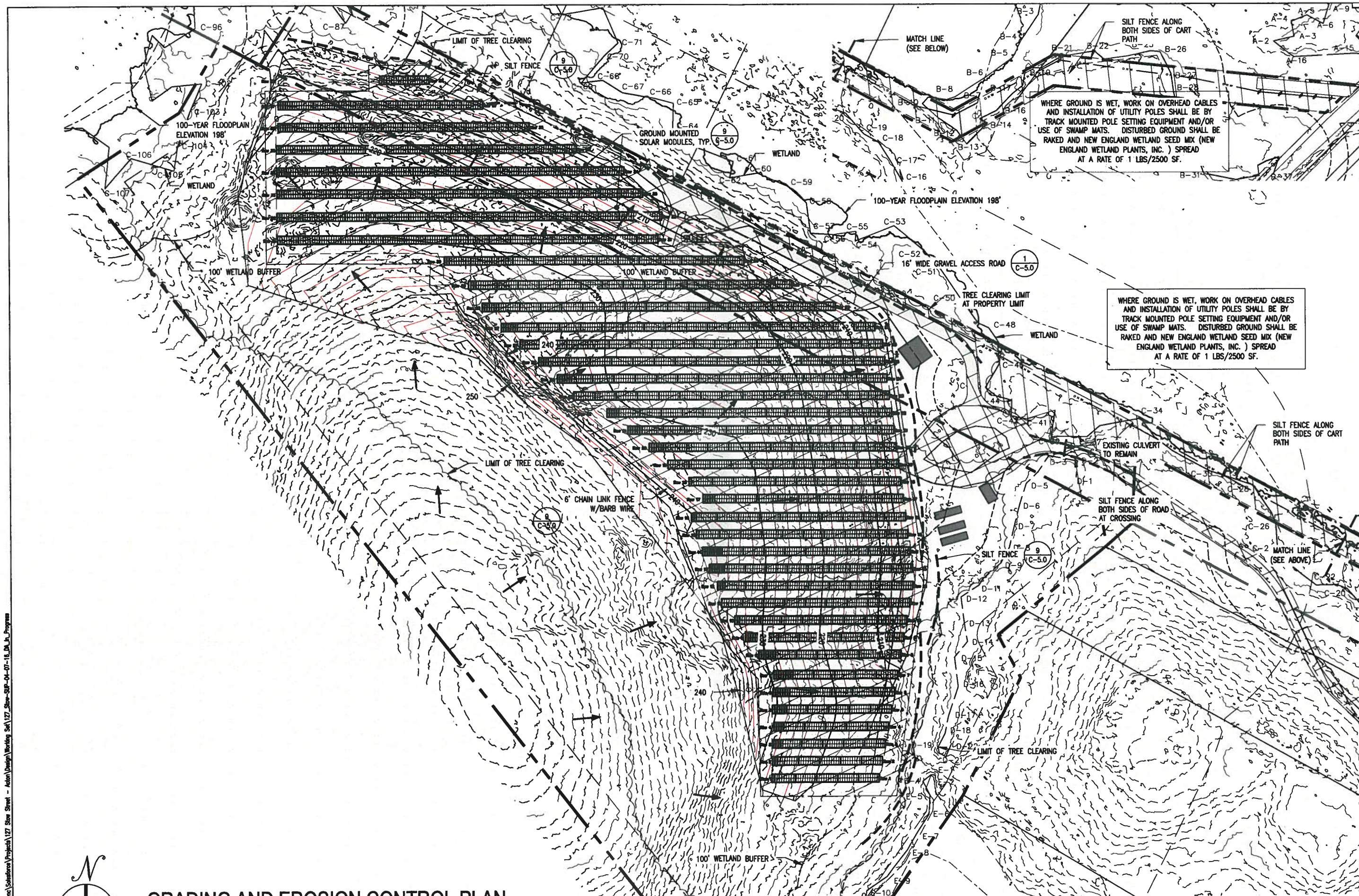

GRADING AND EROSION CONTROL PLAN

SCALE: 1"=60'

0 60' 120'

THIS DOCUMENT IS PROVIDED BY BORREGO SOLAR SYSTEMS INC. TO FACILITATE THE SALE AND INSTALLATION OF A SOLAR POWER SYSTEM FROM BORREGO SOLAR SYSTEMS. REPRODUCTION, RELEASE OR UTILIZATION FOR ANY OTHER PURPOSE, WITHOUT PRIOR WRITTEN CONSENT IS STRICTLY PROHIBITED.

BORREGO SOLAR
55 TECHNOLOGY DRIVE, SUITE 102
LOWELL, MA 01851
PHONE: (888) 898-6273
FAX: (888) 843-8728
WWW.BORREGOSOLAR.COM

NOT FOR CONSTRUCTION

COMMONWEALTH OF MASSACHUSETTS
DAVID M. ALBRECHT
CIVIL
NO. 37510
4-4-16

SITE USE PLANS
2798.82 kW SOLAR ENERGY SYSTEM
0 SOUTH ACTON ROAD REAR STOW, MA 01775
127 STOW STREET ACTON, MA 01720

PROJECT NUMBER: XXX-XXXX

REV	DATE	DRAWN	CHECKED	RELEASE LEVEL
	2/29/16	FR	DA	SUBMISSIONS TO ACTON/STOW
1	3/10/16	DA	DA	RESUBMIT TO STOW CONCOM
2	4/04/16	DA	DA	RESUBMIT TO STOW PLANNING BOARD
3	4/08/16	DA	DA	ACTON CONCOM MODIFICATIONS

SCALES STATED ON DRAWINGS ARE VALID ONLY WHEN PLOTTED ARCH D 24" X 36"

C-4.0

GRADING AND EROSION CONTROL PLAN

C:\Users\dalbrecht\Box Sync\Solaforce\Projects\127 Stow Street - Acton\Design\Working Set\127_Stow-SUP-04-07-16_DA_In_Progress

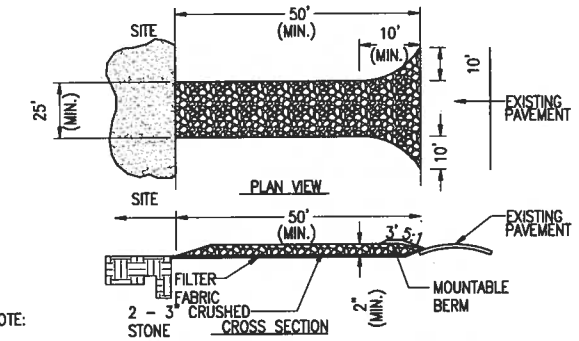

NOTE:

1. ENTRANCE WIDTH SHALL BE A TWENTY-FIVE (25) FOOT MINIMUM, BUT NOT LESS THAN THE FULL WIDTH AT POINTS WHERE INGRESS OR EGRESS OCCURS.
2. THE ENTRANCE SHALL BE MAINTAINED IN A CONDITION WHICH SHALL PREVENT TRACKING OR FLOWING OF SEDIMENT ONTO PUBLIC RIGHTS-OF-WAY. THIS MAY REQUIRE PERIODIC TOP DRESSING WITH ADDITIONAL STONE AS CONDITIONS DEMAND AND REPAIR OR CLEANOUT OF ANY MEASURES USED TO TRAP SEDIMENT. ALL SEDIMENT SPILLED, DROPPED, WASHED OR TRACKED ONTO PUBLIC RIGHTS-OF-WAY MUST BE REMOVED IMMEDIATELY. BERM SHALL BE PERMITTED. PERIODIC INSPECTION AND MAINTENANCE SHALL BE PROVIDED AS NEEDED.

7 STABILIZED CONSTRUCTION ENTRANCE

SCALE: N.T.S.

XD_CIVIL_TEMPORARY CONSTRUCTION_STABILIZED CONSTRUCTION ENTRANCE.DWG 2014-1-6

NOTES:

1. REMOVE TOP SOIL AND ORGANIC MATERIAL FULL DEPTH WITHIN PAD BEARING AREA.
2. GRAVEL SUB-GRADE SHALL BE WELL GRADED GRAVEL SUITABLE FOR BEARING AND SHALL BE COMPACTED WITH A HEAVY VIBRATORY COMPACTOR (INSTALLED IN 8" MAX. LIFTS FOR ANY NEW GRAVEL FILL).
3. REFER TO "STRUCTURAL NOTES" FOR ADDITIONAL INFORMATION.

EPOXY ANCHOR EMBED	
ϕ ANCHOR	MIN EMBED
3/8"	3-1/2"
1/2"	4-1/4"
5/8"	5"

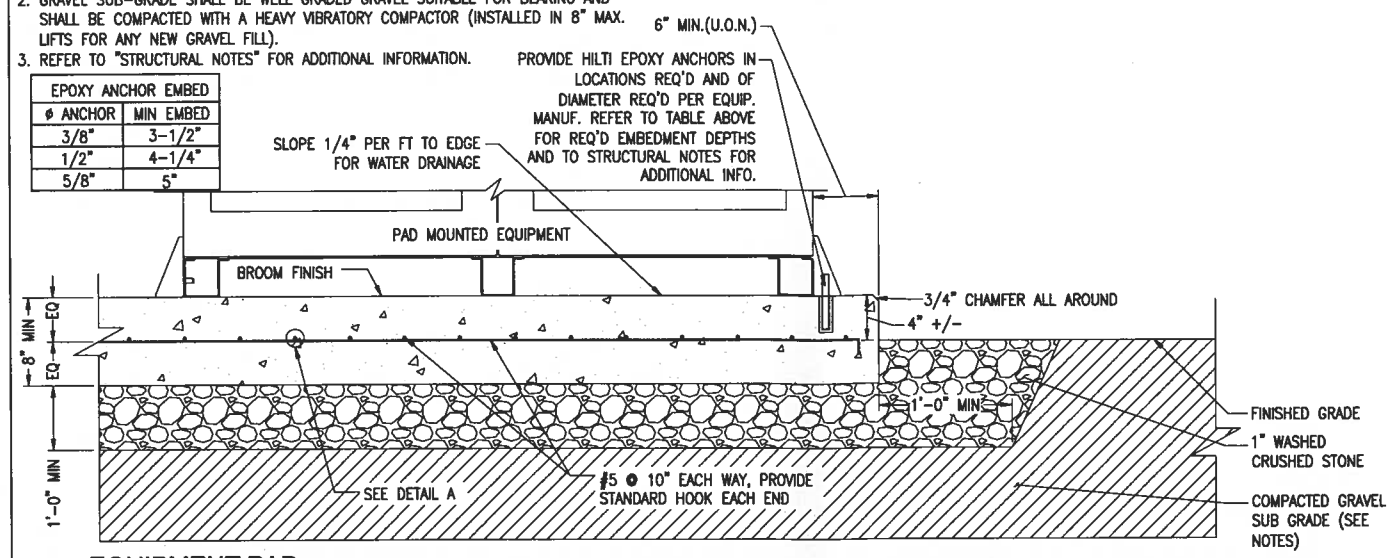

4 EQUIPMENT PAD

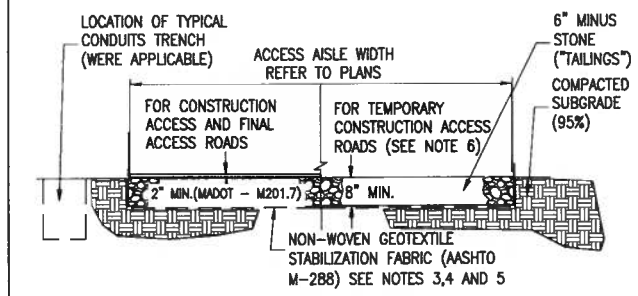

NOTES:

1. SUBCONTRACTOR SHALL EXCAVATE TO SUITABLE MATERIAL FOR SUBGRADE.
2. SUBCONTRACTOR SHALL COMPACT SUBGRADE TO PROVIDE SUITABLE SURFACE TO PLACE ROAD.
3. GEOTEXTILE FABRIC SHALL MEET THE FOLLOWING REQUIREMENTS:
   - TENSILE STRENGTH: 150 LB MIN.
   - ELONGATION: 50%
   - CBR PUNCTURE: 400 LB MIN.
   - MINIMUM WATER FLOW RATE: 120 GPM / FT^2
4. SUBCONTRACTOR SHALL FOLLOW GEOTEXTILE FABRIC MANUFACTURER INSTALLATION PROCEDURES.
5. WHERE OVERLAPPING OF GEOTEXTILE FABRIC IS REQUIRED, SUBCONTRACTOR SHALL OVERLAP A MINIMUM OF 24".
6. SUBCONTRACTOR SHALL REMOVE TEMPORARY CONSTRUCTION ACCESS ROADS, AND RESTORE TO PRE-CONSTRUCTION CONDITIONS TO THE SATISFACTION OF THE CEOR AND THE GOVERNING AGENCIES.

1 GRAVEL ACCESS ROAD

SCALE: NTS

XD_CIVIL_GRAVEL ACCESS RD.DWG 2014-1-6

THIS DOCUMENT IS PROVIDED BY BORREGO SOLAR SYSTEMS INC. TO FACILITATE THE SALE AND INSTALLATION OF A SOLAR POWER SYSTEM FROM BORREGO SOLAR SYSTEMS. REPRODUCTION, RELEASE OR UTILIZATION FOR ANY OTHER PURPOSE, WITHOUT PRIOR WRITTEN CONSENT IS STRICTLY PROHIBITED.

BORREGO SOLAR
55 TECHNOLOGY DRIVE, SUITE 102
LOWELL, MA 01851
PHONE: (855) 698-6273
FAX: (866) 843-8778
WWW.BORREGOSOLAR.COM

NOT FOR CONSTRUCTION

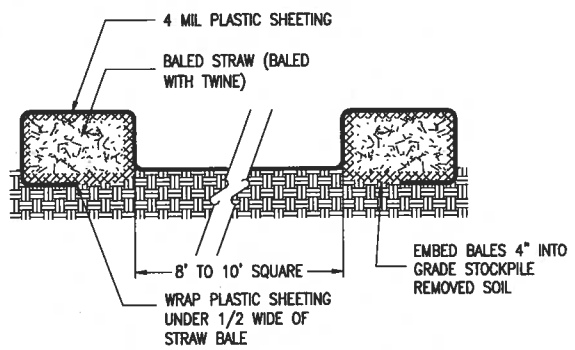

NOTE: PLASTIC SHEETING SHOULD BE FREE OF TEARS OR HOLES. AFTER BASIN IS USED, WASHWATER FROM WASHOUT BASIN SHOULD BE ALLOWED TO EVAPORATE OR BE VACUUMED OUT. REMOVE REMAINING HARDENED SOLIDS. REPLACE PLASTIC SHEETING AND STRAWBALES AS REQUIRED.

8 CONCRETE WASHOUT BASINS

SCALE: NTS

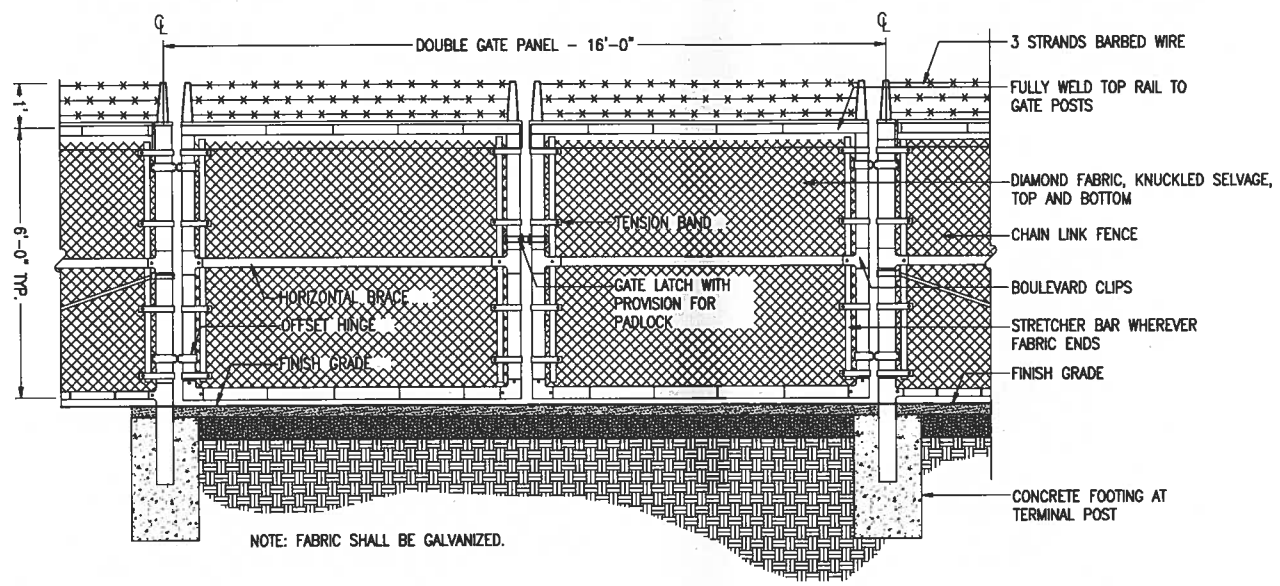

NOTE: FABRIC SHALL BE GALVANIZED.

5 VEHICLE GATE

SCALE: NTS

2014-1-6

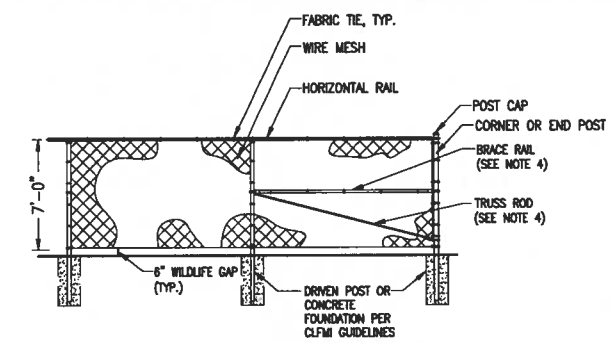

NOTES:

1. THE FENCE SHALL MEET OR EXCEED THE CHAIN LINK FENCE MANUFACTURER INSTITUTE (CLFMI) GUIDELINES AND RELATED FEDERAL SPECIFICATIONS FOR SECURITY CHAIN LINK FENCE MATERIALS AND INSTALLATION.
2. ALL FENCE MATERIAL AND COMPONENTS SHALL BE GALVANIZED, UNLESS OTHERWISE NOTED.
3. THIS DETAIL NOT APPLICABLE FOR PRIVACY FENCE OR FENCE WITH SLATS.
4. ADJUSTABLE TRUSS ROD AND BRACE RAIL AT CORNER OR END POSTS ONLY, IF REQUIRED BY CLFMI GUIDELINES.

2 CHAIN LINK FENCING DETAIL

SCALE: NTS

XD_CIVIL_FENCE_7'_CHAIN_LINK_WILDLIFE_GAP.DWG REV.02-03-2015

DAVID M. ALBRECHT CIVIL No. 37313 COMMONWEALTH OF MASSACHUSETTS

SITE USE PLANS
2798.82 kW SOLAR ENERGY SYSTEM
0 SOUTH ACTON ROAD REAR STOW, MA 01775
127 STOW STREET ACTON, MA 01720

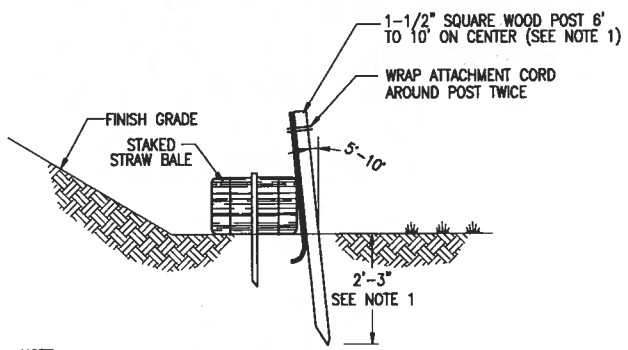

NOTE:

1. DEPTH MAY VARY WITH TRIBUTARY AREA: 2 FT. FOR 100 SF/LF FENCE; 3 FT. FOR 500 SF/LF FENCE, UNLESS POST IS TO BE SET IN PEAT THEN 3 FT. OR DEPTH POSSIBLE BY PUSHING BY HAND SHALL BE REQUIRED.

9 STRAW BALE SILT FENCE

SCALE: NTS

XD_CIVIL_EROSION_STRAW BALE SILT FENCE 2014-6-2

NOTE: THE "RBI" RACKING AND DRIVEN PILE FOUNDATIONS ARE DESIGNED BY RBI , AND WILL BE A SUBMITTAL TO BORREGO. THE INFORMATION SHOWN HERE IS FOR GENERAL REFERENCE ONLY.

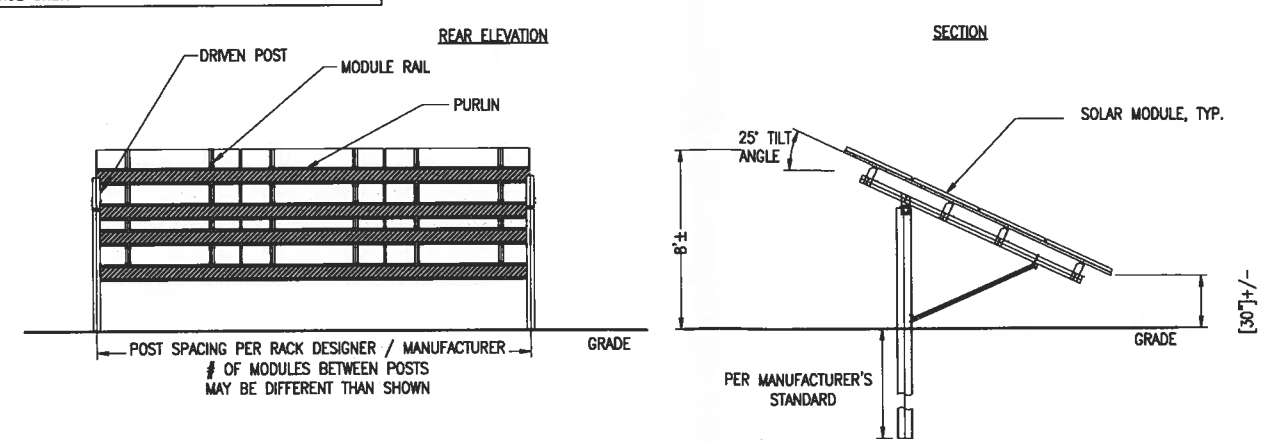

6 RACK SECTION & REAR ELEVATION_4X SINGLE POST

RBI - GM - 1

SCALE: NTS

XD_STRUC_RBI_GM-1_RACK SECTION REAR ELEVATION_4X SINGLE POST 2014-6-5

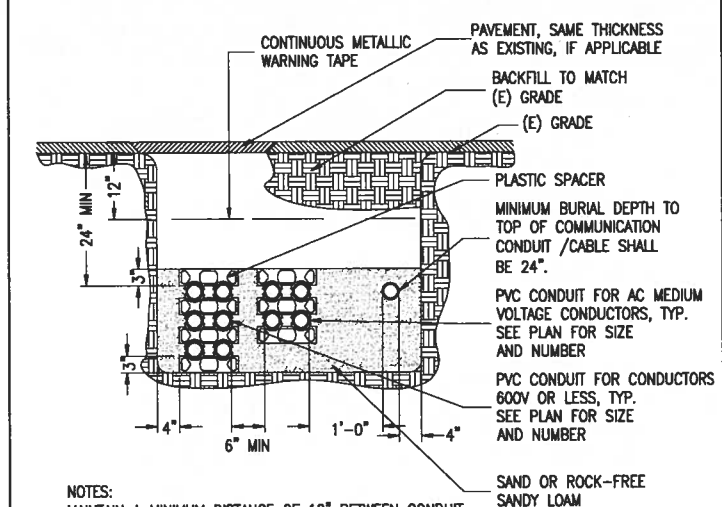

NOTES:
MAINTAIN A MINIMUM DISTANCE OF 12" BETWEEN CONDUIT WITH COMMUNICATION WIRING AND ANY CONDUIT WITH ELECTRIC POWER CONDUCTORS.

3 TYPICAL TRENCH

SCALE: NTS

2014-1-6

PROJECT NUMBER: XXX-XXXX

REV	DATE	DRAWN	CHECKED	RELEASE LEVEL
	2/29/16	FR	DA	SUBMISSIONS TO ACTON/STOW
1	3/10/16	DA	DA	RESUBMIT TO STOW CONCOM
2	4/04/16	DA	DA	RESUBMIT TO STOW PLANNING BOARD
3	4/08/16	DA	DA	ACTON CONCOM MODIFICATIONS

SCALES STATED ON DRAWINGS ARE VALID ONLY WHEN PLOTTED ARCH D 24" X 36"

C-5.0
CIVIL DETAILS

C:\Users\albrecht\Box Sync\Salesforce\Projects\127 Stow Street - Acton\Design\Working Set\127_Stow-SUP-04-07-16_DA_In_Progress

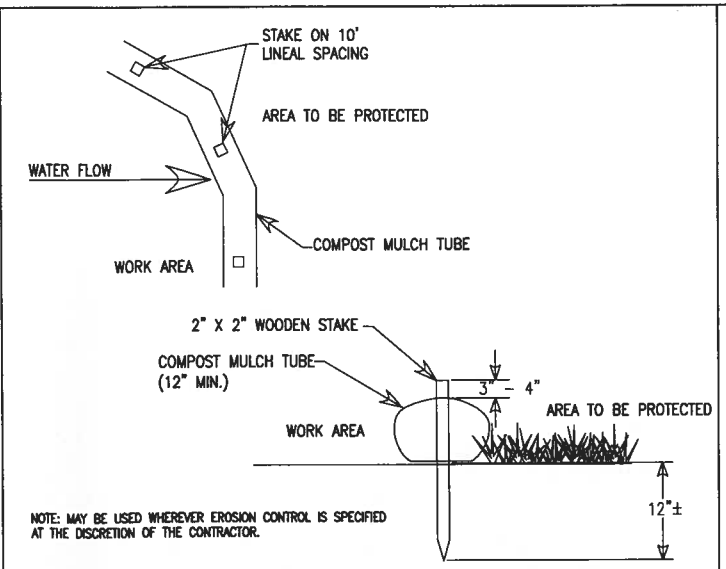

NOTE: MAY BE USED WHEREVER EROSION CONTROL IS SPECIFIED AT THE DISCRETION OF THE CONTRACTOR.

3 FILTREXX FILTER SOCK

SCALE: NTS

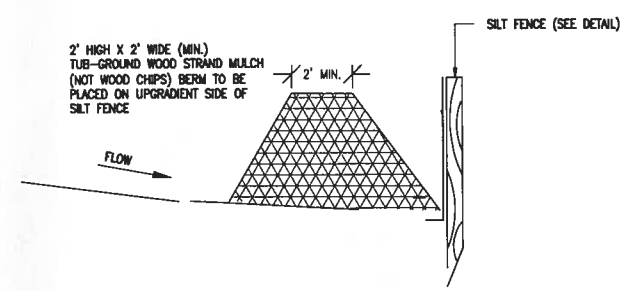

TO BE USED WHERE SHOWN ON PLAN, AT MINIMUM, MAY BE ADDED IN OTHER LOCATIONS WHERE DEEMED APPROPRIATE.

4 WOOD CHIP BERM

SCALE: NTS

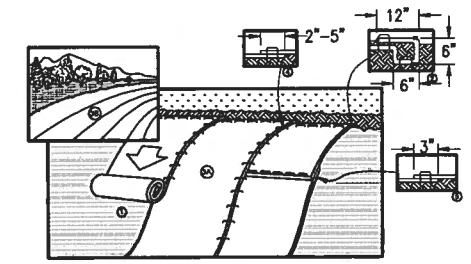

1. PREPARE SOIL BEFORE INSTALLING ROLLED EROSION CONTROL PRODUCTS (RECP's), INCLUDING ANY NECESSARY APPLICATION OF LIME, FERTILIZER, AND SEED.
2. BEGIN AT THE TOP OF THE SLOPE BY ANCHORING THE RECP's IN A 6" (15 CM) DEEP X 6" (15 CM) WIDE TRENCH WITH APPROXIMATELY 12" (30cm) OF RECP's EXTENDED BEYOND THE UP-SLOPE PORTION OF THE TRENCH. ANCHOR THE RECP's WITH A ROW OF STAPLES/STAKES APPROXIMATELY 12" (30 CM) APART IN THE BOTTOM OF THE TRENCH. BACKFILL AND COMPACT THE TRENCH AFTER STAPLING. APPLY SEED TO COMPACTED SOIL AND FOLD REMAINING 12" (30 CM) PORTION OF RECP's BACK OVER SEED AND COMPACTED SOIL. SECURE RECP's OVER COMPACTED SOIL WITH A ROW OF STAPLES/STAKES SPACED APPROXIMATELY 12" (30 CM) APART ACROSS THE WIDTH OF THE RECP's.
3. ROLL THE RECP's (A.) DOWN OR (B.) HORIZONTALLY ACROSS THE SLOPE. RECP's WILL UNROLL WITH APPROPRIATE SIDE AGAINST THE SOIL SURFACE. ALL RECP's MUST BE SECURELY FASTENED TO SOIL SURFACE BY PLACING STAPLES/STAKES IN APPROPRIATE LOCATIONS AS SHOWN IN THE STAPLE PATTERN GUIDE. WHEN USING THE DOT SYSTEM™, STAPLES/STAKES SHOULD BE PLACED THROUGH EACH OF THE COLORED DOTS CORRESPONDING TO THE APPROPRIATE STAPLE PATTERN.
4. THE EDGES OF PARALLEL RECP's MUST BE STAPLED WITH APPROXIMATELY 2" – 5" (5 CM – 12.5 CM) OVERLAP DEPENDING ON RECP's TYPE.
5. CONSECUTIVE RECP's SPLICED DOWN THE SLOPE MUST BE PLACED END OVER END (SHINGLE STYLE) WITH AN APPROXIMATE 3" (7.5 CM) OVERLAP. STAPLE THROUGH OVERLAPPED AREA, APPROXIMATELY 12" (30 CM) APART ACROSS ENTIRE RECP's WIDTH.

NOTE:
*IN LOOSE SOIL CONDITIONS, THE USE OF STAPLE OR STAKE LENGTHS GREATER THAN 6" (15 CM) MAY BE NECESSARY TO PROPERLY SECURE THE RECP's.

1 EROSION CONTROL BLANKET

SCALE: N.T.S.

XD_CIVIL_EROSION_EROSION CONTROL BLANKET 2014-6-2

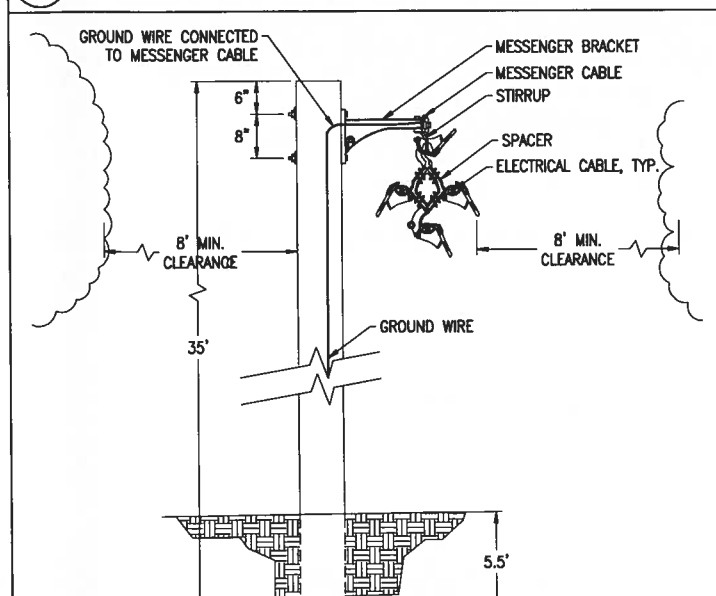

5 UTILITY POLE CLEARANCES

BRACKET WITH SPACER

SCALE: N.T.S

XD_ELEC_TYPICAL TANGENT CONSTRUCTION 01-18-16

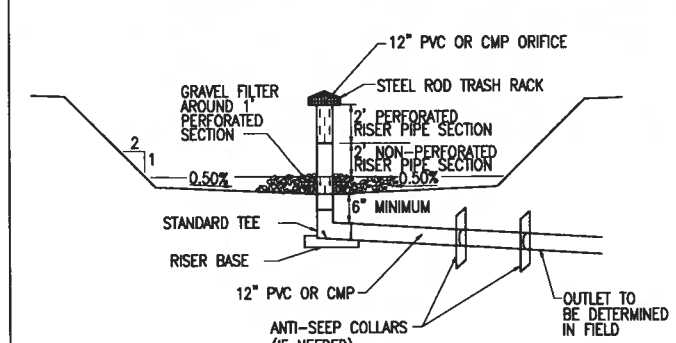

2 TEMPORARY SEDIMENTATION BASIN

SCALE: NTS

XD_CIVIL_EROSION_TEMPORARY SEDIMENTATION BASIN 2014-6-2

THIS DOCUMENT IS PROVIDED BY BORREGO SOLAR SYSTEMS INC. TO FACILITATE THE SALE AND INSTALLATION OF A SOLAR POWER SYSTEM FROM BORREGO SOLAR SYSTEMS. REPRODUCTION, RELEASE OR UTILIZATION FOR ANY OTHER PURPOSE, WITHOUT PRIOR WRITTEN CONSENT IS STRICTLY PROHIBITED.

BORREGO SOLAR
55 TECHNOLOGY DRIVE, SUITE 102
LOWELL, MA 01851
PHONE: (888) 898-9273
FAX: (888) 843-6778
WWW.BORREGOSOLAR.COM

NOT FOR CONSTRUCTION

COMMONWEALTH OF MASSACHUSETTS
DAVID M. ALBRECHT
CIVIL
No. 37320
PROFESSIONAL ENGINEER
4-4-16

SITE USE PLANS
2798.82 KW SOLAR ENERGY SYSTEM
0 SOUTH ACTON ROAD REAR STOW, MA 01775
127 STOW STREET ACTON, MA 01720

PROJECT NUMBER: XXX–XXXX

REV	DATE	DRAWN	CHECKED	RELEASE LEVEL
1	2/29/16	FR	DA	SUBMISSIONS TO ACTON/STOW
2	3/10/16	DA	DA	RESUBMIT TO STOW CONCOM
3	4/04/16	DA	DA	RESUBMIT TO STOW PLANNING BOARD
	4/08/16	DA	DA	ACTON CONCOM MODIFICATIONS

SCALES STATED ON DRAWINGS ARE VALID ONLY WHEN PLOTTED ARCH D 24" X 36"

C-5.1
CIVIL DETAILS

C:\Users\dalbrecht\Box Sync\Salesforce\Projects\127 Stow Street - Acton\Design\Working Set\127_Stow-SUP-04-07-16_DA_In_Progress

ELECTRICAL EQUIPMENT SCHEDULE

REF. #	QTY.	DESCRIPTION	FURNISHED BY
1	XXX	BRAND MODEL MODULE	BORREGO
2A	X	BRAND MODEL	BORREGO
2B	2	SUNGROW SG36KU	BORREGO
3	2	2000A SWITCHBOARD, 480V, 3PH, NEMA 3R, 3W, (16) 100A 3P BREAKERS, (1) 60A 3P BREAKER, 25KAIC MIN, 1600A MAIN BREAKER	BORREGO
4	1	2000kVA TRANSFORMER, 13.8kV DELTA PRIMARY, 480V UNGROUNDED WYE SECONDARY (WITH +/- 5% PRIMARY TAPS), 3 PHASE, IMPEDANCE 5.9%, ELBOW SURGE ARRESTORS INCLUDED	BORREGO
5	1	POLE MOUNTED RECLOSER SWITCH WITH INTEGRATED SEL-651R MULTIFUNCTION RELAYING. PT'S AND CT'S WITH 24VDC SUPPLY AND 8 HOUR BATTERY BACK-UP	BORREGO
6	1	17 kV MAX, 600A, LOAD BREAK DISCONNECT SWITCH, POLE MOUNTED, GANG OPERATED, LOCKABLE	SUB-CONTRACTOR
7	3	POLE TOP SURGE ARRESTER, COOPER VARISTER TYPE EVOLUTION, DISTRIBUTION CLASS, MOV ARRESTER RATING 12kV, 10.2kV MCOV	SUB-CONTRACTOR

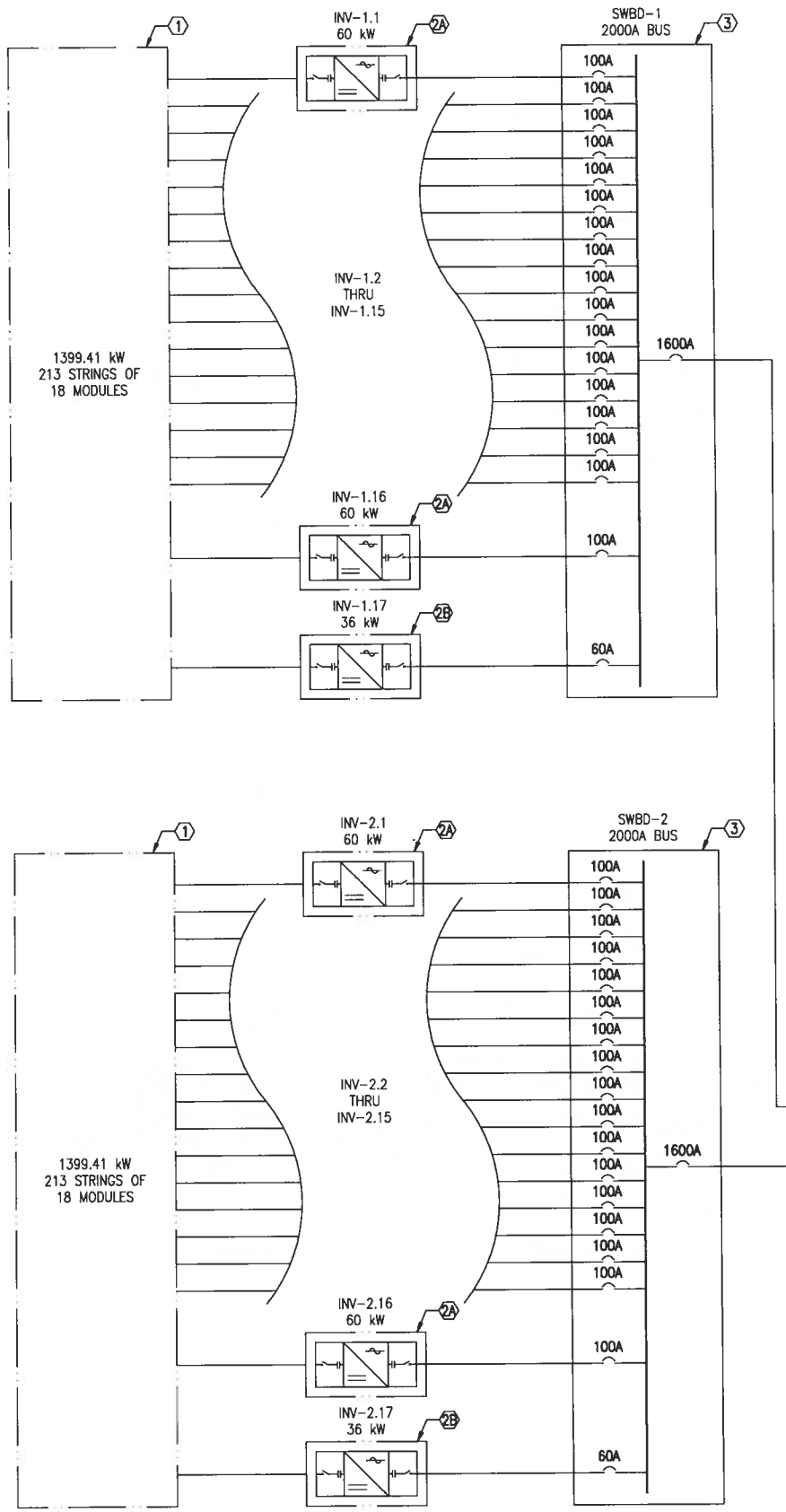

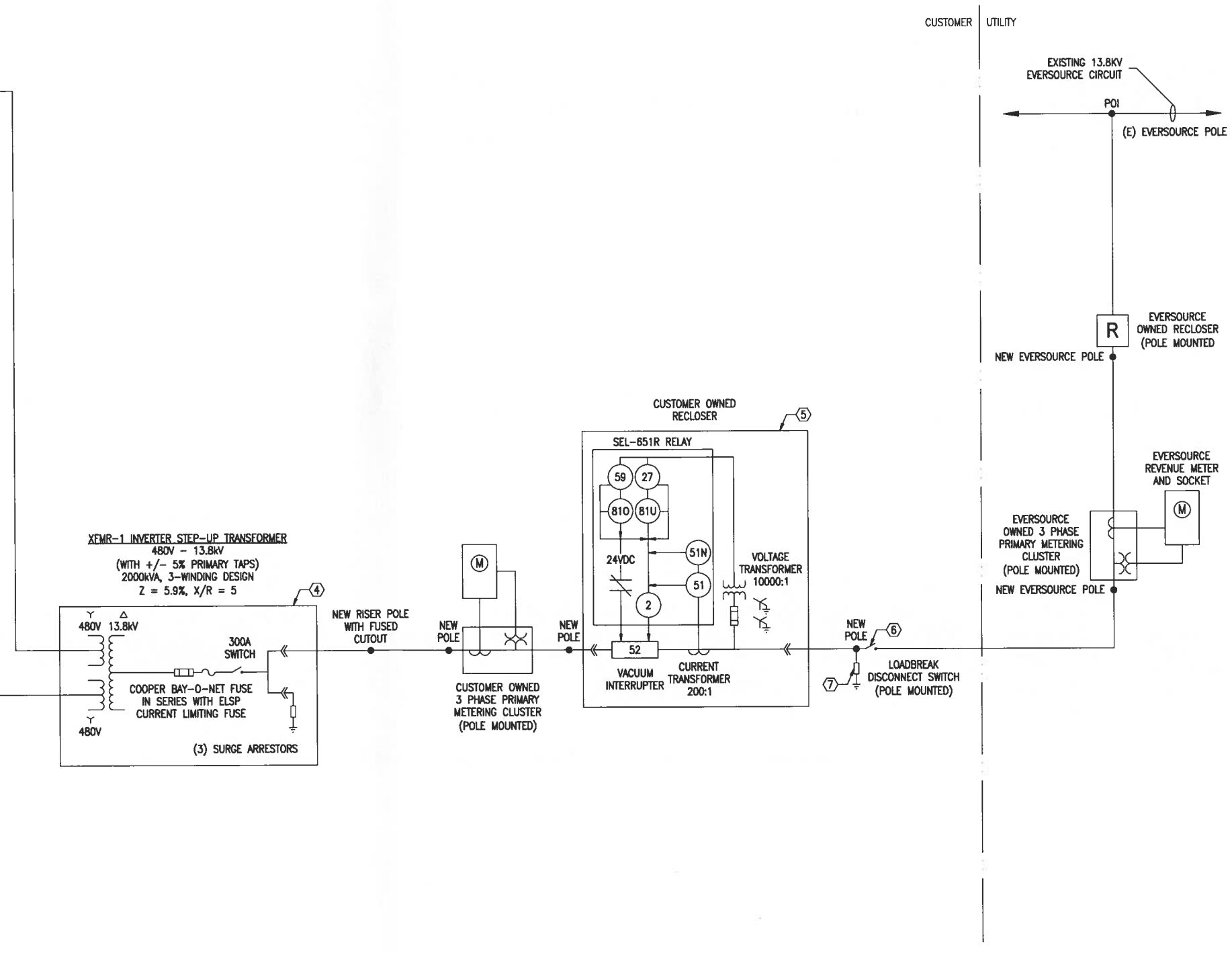

ELECTRICAL SINGLE LINE DIAGRAM

SCALE: NTS

THIS DOCUMENT IS PROVIDED BY BORREGO SOLAR SYSTEMS INC. TO FACILITATE THE SALE AND INSTALLATION OF A SOLAR POWER SYSTEM FROM BORREGO SOLAR SYSTEMS. REPRODUCTION, RELEASE OR UTILIZATION FOR ANY OTHER PURPOSE, WITHOUT PRIOR WRITTEN CONSENT IS STRICTLY PROHIBITED.

BORREGO SOLAR
55 TECHNOLOGY DRIVE, SUITE 102
LOWELL, MA 01851
PHONE: (888) 896-6273
FAX: (888) 943-6778
WWW.BORREGOSOLAR.COM

NOT FOR CONSTRUCTION

COMMONWEALTH OF MASSACHUSETTS
DAVID M. AUBRECHT
CIVIL
NO 37372
4-4-16

SITE USE PLANS
2798.82 kW SOLAR ENERGY SYSTEM
0 SOUTH ACTON ROAD REAR, STOW, MA 01775
127 STOW STREET ACTON, MA 01720

PROJECT NUMBER:
XXX-XXXX

REV	DATE	DRAWN	CHECKED	RELEASE LEVEL
	2/29/16	FR	DA	SUBMISSIONS TO ACTON/STOW
1	3/10/16	DA	DA	RESUBMIT TO STOW CONCOM
2	4/04/16	DA	DA	RESUBMIT TO STOW PLANNING BOARD
3	4/08/16	DA	DA	ACTON CONCOM MODIFICATIONS

SCALES STATED ON DRAWINGS ARE VALID ONLY WHEN PLOTTED ARCH D 24" X 36"

E-0.0
ELECTRICAL SINGLE LINE DIAGRAM

C:\Users\aubrecht\Box Sync\Salesforce\Projects\127 Stow Street - Acton\Design\Working Set\127_Stow-SLP-04-07-16_DA_In_Progress