# SITE PLAN
FOR
# 429 GREAT ROAD
## ACTON, MASSACHUSETTS
APRIL 22, 2016

PLAN INDEX


| | |
|---|---|
| SHEET 1 | COVER SHEET |
| SHEET 2 | EXISTING CONDITIONS PLAN |
| SHEET 3 | GRADING AND DRAINAGE PLAN |
| SHEET 4 | LAYOUT PLAN |
| SHEET 5–6 | CONSTRUCTION DETAILS |


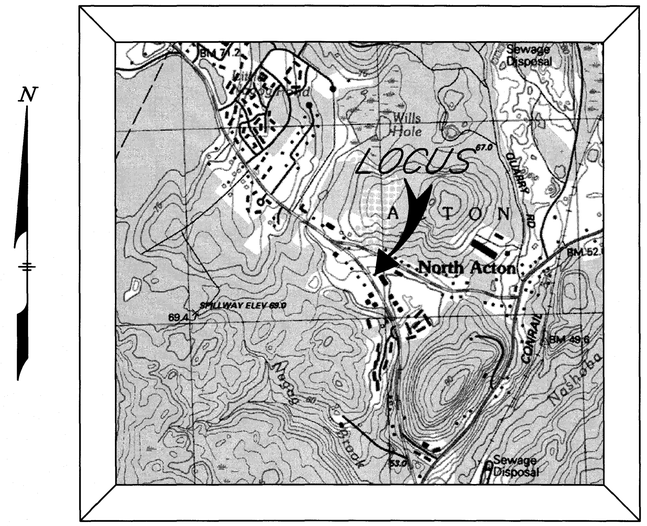


LOCUS MAP
SCALE: 1"=1200'

RECORD OWNERS:

COUNTRY PROPERTIES, LLC
6 PROCTOR STREET
ACTON, MA 01720

APPLICANT:

COUNTRY PROPERTIES, LLC
6 PROCTOR STREET
ACTON, MA 01720

ZONING DISTRICT:

LIMITED BUSINESS
GROUNDWATER PROTECTION DISTRICT ZONE 3 AND 4

REFERENCE:

MIDDLESEX REGISTRY OF DEEDS
SOUTH DISTRICT
DEED BOOK 60540, PAGE 404
TOWN ATLAS MAP C–5, PARCEL 67

COMMONWEALTH OF MASSACHUSETTS
GEORGE DIMAKARAKOS
CIVIL
No. 41281
REGISTERED PROFESSIONAL ENGINEER

ENGINEER/SURVEYOR

STAMSKI AND MCNARY, INC.
1000 MAIN STREET
ACTON, MASSACHUSETTS 01720
(978) 263–8585

COMMONWEALTH OF MASSACHUSETTS
JOSEPH MARCH
# 36364
PROFESSIONAL LAND SURVEYOR

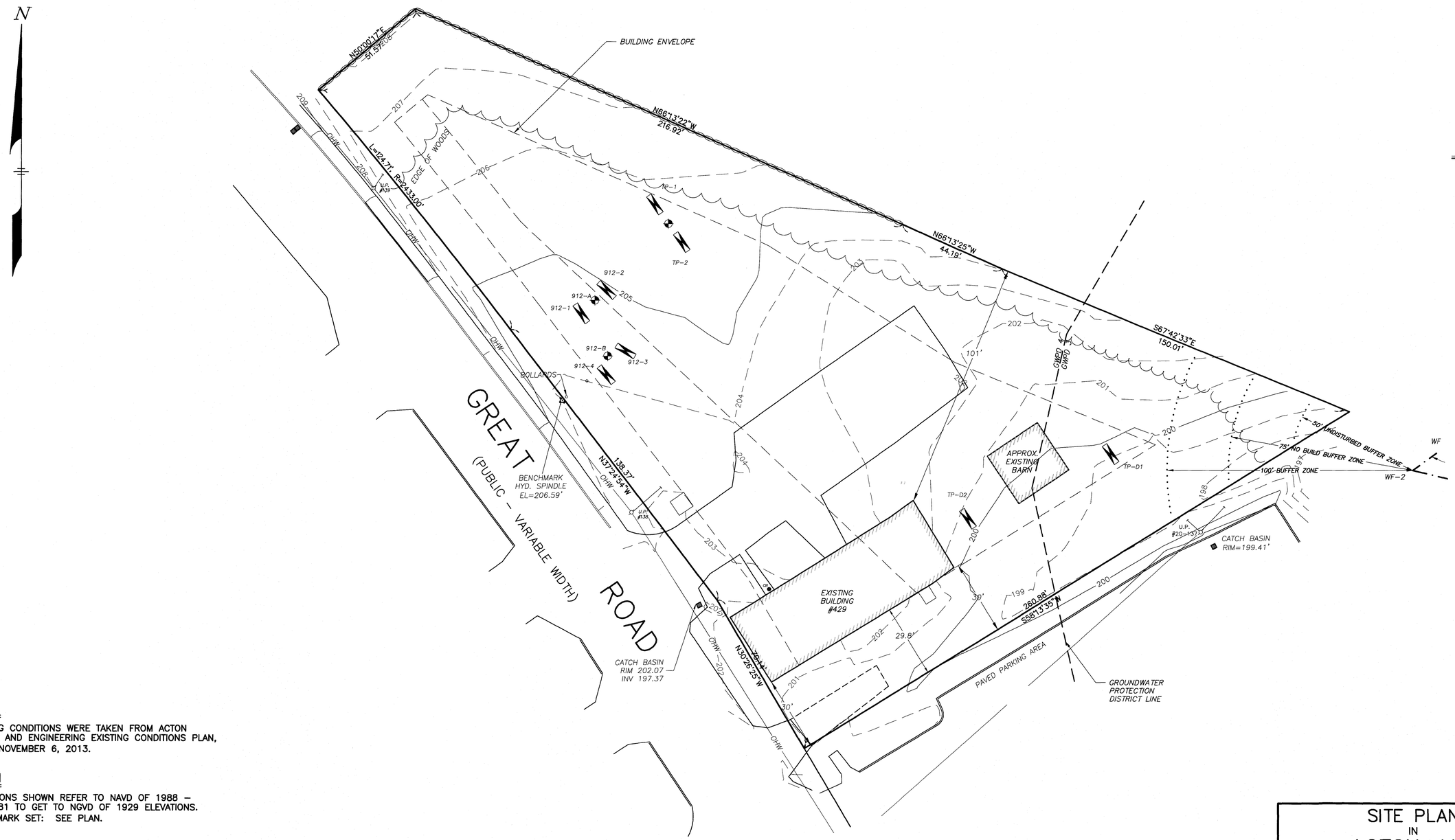


## LEGEND:

- N/F — NOW OR FORMERLY
- OHW — OVERHEAD WIRES
- TREE
- TREE LINE
- UP — UTILITY POLE
- GG — GAS GATE
- G — GAS SERVICE (BURIED)
- WG — WATER GATE
- W — WATER SERVICE (BURIED)
- DMH — DRAIN MANHOLE
- D — SUB-SURFACE DRAIN LINE
- 99 — EXISTING CONTOUR
- 95 — EXISTING CONTOUR
- LIGHTPOLE
- WETLAND FLAG
- 134.5 — SPOT ELEVATION
- STONE WALL
- EDGE OF PAVEMENT

## NOTE

EXISTING CONDITIONS WERE TAKEN FROM ACTON SURVEY AND ENGINEERING EXISTING CONDITIONS PLAN, DATED NOVEMBER 6, 2013.

## DATUM

ELEVATIONS SHOWN REFER TO NAVD OF 1988 – ADD 0.81 TO GET TO NGVD OF 1929 ELEVATIONS.
BENCHMARK SET: SEE PLAN.

## UTILITY NOTE:

ALL UNDERGROUND UTILITIES SHOWN HERE WERE COMPILED ACCORDING TO AVAILABLE RECORD PLANS FROM VARIOUS UTILITY COMPANIES AND PUBLIC AGENCIES AND ARE APPROXIMATE ONLY. ACTUAL LOCATIONS MUST BE DETERMINED IN THE FIELD BEFORE DESIGNING, EXCAVATING, BLASTING, INSTALLING, BACKFILLING, GRADING, PAVEMENT RESTORATION OR REPAIRING. ALL UTILITY COMPANIES, PUBLIC AND PRIVATE, MUST BE CONTACTED INCLUDING THOSE IN CONTROL OF UTILITIES NOT SHOWN ON THIS PLAN. SEE CHAPTER 370, ACTS OF 1963 MASS. WE ASSUME NO RESPONSIBILITY FOR DAMAGES INCURRED AS A RESULT OF UTILITIES OMITTED OR INACCURATELY SHOWN. BEFORE PLANNING FUTURE CONNECTIONS THE APPROPRIATE PUBLIC UTILITY ENGINEERING DEPARTMENT MUST BE CONSULTED. DIG SAFE TELEPHONE No. 1–888–344–7233.

# SITE PLAN
IN
# ACTON, MA.

## EXISTING CONDITIONS PLAN

FOR: COUNTRY PROPERTIES, LLC
SCALE: 1"=20' APRIL 22, 2016

COMMONWEALTH OF MASSACHUSETTS
GEORGE DIMAKARAKOS
CIVIL
No. 41281
REGISTERED PROFESSIONAL ENGINEER

STAMSKI AND McNARY, INC.
1000 MAIN STREET ACTON, MASS.
*ENGINEERING – PLANNING – SURVEYING*

0 10 20 40 60 80

SM–5369 (5369 SITE 4.dwg) SHEET 2 OF 6

COMMONWEALTH OF MASSACHUSETTS
JOSEPH MARCH
# 36384
PROFESSIONAL LAND SURVEYOR

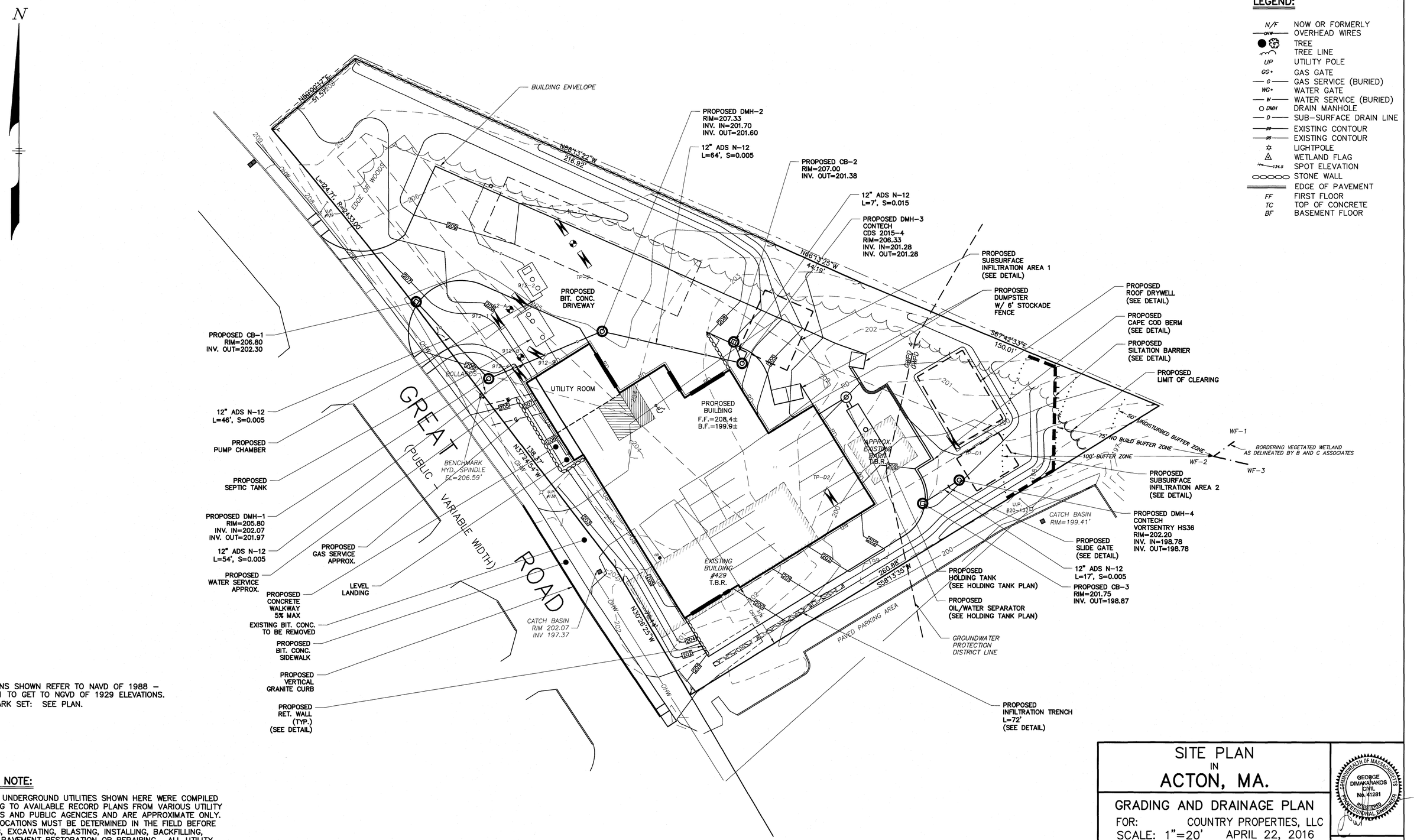


## LEGEND:

| | |
|---|---|
| N/F | NOW OR FORMERLY |
| —OHW— | OVERHEAD WIRES |
| | TREE |
| | TREE LINE |
| UP | UTILITY POLE |
| GG• | GAS GATE |
| —G— | GAS SERVICE (BURIED) |
| WG• | WATER GATE |
| —W— | WATER SERVICE (BURIED) |
| ○ DMH | DRAIN MANHOLE |
| —D— | SUB-SURFACE DRAIN LINE |
| —99— | EXISTING CONTOUR |
| —95— | EXISTING CONTOUR |
| ☆ | LIGHTPOLE |
| △ | WETLAND FLAG |
| 134.5 | SPOT ELEVATION |
| ○○○○○ | STONE WALL |
| | EDGE OF PAVEMENT |
| FF | FIRST FLOOR |
| TC | TOP OF CONCRETE |
| BF | BASEMENT FLOOR |

## DATUM

ELEVATIONS SHOWN REFER TO NAVD OF 1988 – ADD 0.81 TO GET TO NGVD OF 1929 ELEVATIONS.
BENCHMARK SET: SEE PLAN.

## UTILITY NOTE:

ALL UNDERGROUND UTILITIES SHOWN HERE WERE COMPILED ACCORDING TO AVAILABLE RECORD PLANS FROM VARIOUS UTILITY COMPANIES AND PUBLIC AGENCIES AND ARE APPROXIMATE ONLY. ACTUAL LOCATIONS MUST BE DETERMINED IN THE FIELD BEFORE DESIGNING, EXCAVATING, BLASTING, INSTALLING, BACKFILLING, GRADING, PAVEMENT RESTORATION OR REPAIRING. ALL UTILITY COMPANIES, PUBLIC AND PRIVATE, MUST BE CONTACTED INCLUDING THOSE IN CONTROL OF UTILITIES NOT SHOWN ON THIS PLAN. SEE CHAPTER 370, ACTS OF 1963 MASS. WE ASSUME NO RESPONSIBILITY FOR DAMAGES INCURRED AS A RESULT OF UTILITIES OMITTED OR INACCURATELY SHOWN. BEFORE PLANNING FUTURE CONNECTIONS THE APPROPRIATE PUBLIC UTILITY ENGINEERING DEPARTMENT MUST BE CONSULTED. DIG SAFE TELEPHONE No. 1-888-344-7233.

# SITE PLAN
IN
# ACTON, MA.

## GRADING AND DRAINAGE PLAN

FOR: COUNTRY PROPERTIES, LLC
SCALE: 1"=20' APRIL 22, 2016

STAMSKI AND McNARY, INC.
1000 MAIN STREET ACTON, MASS.
*ENGINEERING – PLANNING – SURVEYING*

0 10 20 40 60 80

SM-5369 (5369 SITE 4.dwg) SHEET 3 OF 6

COMMONWEALTH OF MASSACHUSETTS
GEORGE DIMAKARAKOS
CIVIL
No. 41281
REGISTERED PROFESSIONAL ENGINEER

COMMONWEALTH OF MASSACHUSETTS
JOSEPH MARCH
# 36384
PROFESSIONAL LAND SURVEYOR

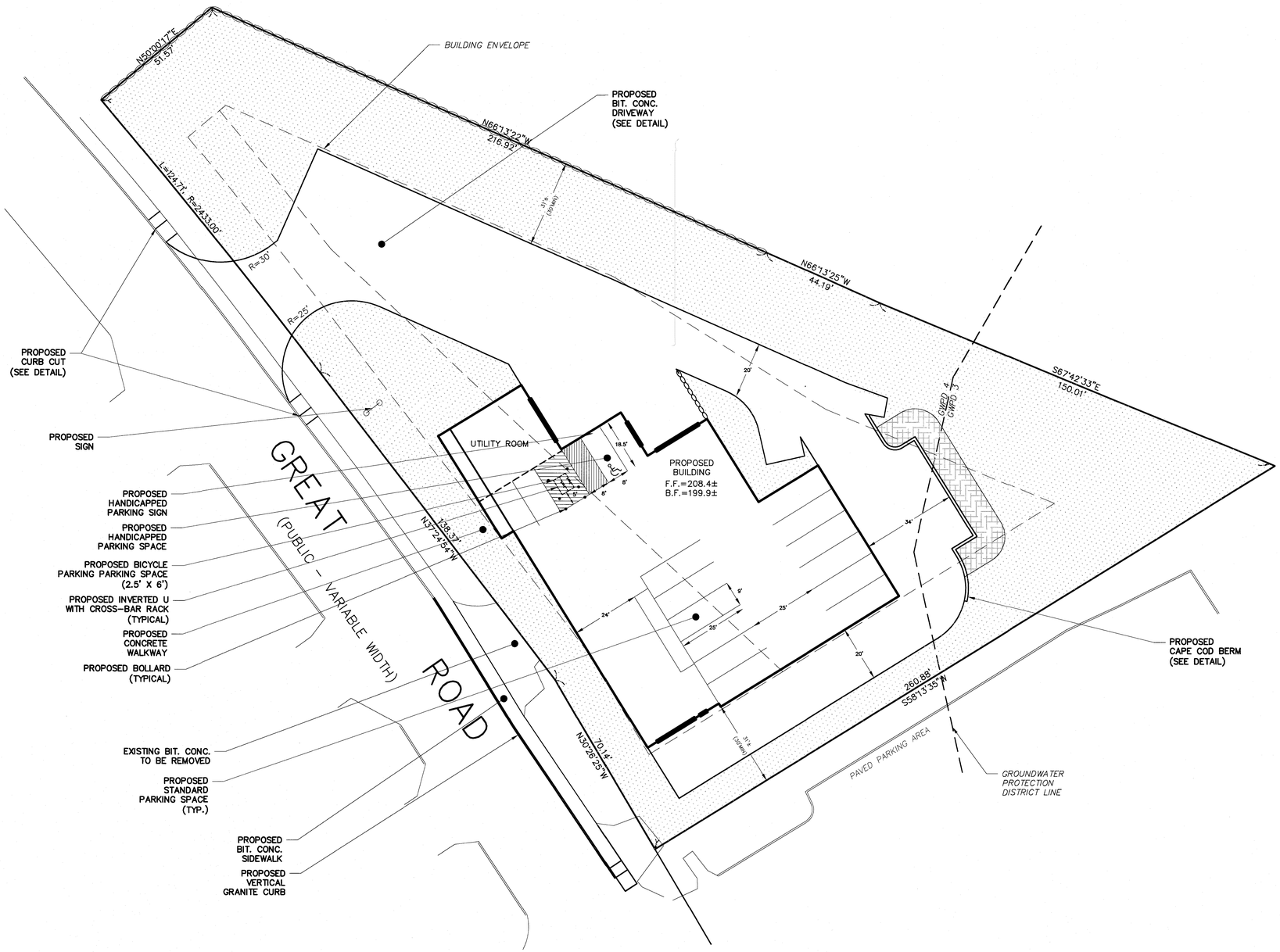


## LEGEND:

| | |
|---|---|
| N/F | NOW OR FORMERLY |
| OHW | OVERHEAD WIRES |
| | TREE |
| | TREE LINE |
| UP | UTILITY POLE |
| GG• | GAS GATE |
| G | GAS SERVICE (BURIED) |
| WG• | WATER GATE |
| W | WATER SERVICE (BURIED) |
| DMH | DRAIN MANHOLE |
| D | SUB-SURFACE DRAIN LINE |
| 99 | EXISTING CONTOUR |
| 95 | EXISTING CONTOUR |
| | LIGHTPOLE |
| | WETLAND FLAG |
| 99X9 | SPOT ELEVATION |
| | STONE WALL |
| | EDGE OF PAVEMENT |
| | PERIMETER LANDSCAPING |
| | OPEN SPACE |

## LAND USE DATA

**ZONING REQUIREMENTS**

ZONING DISTRICT: LIMITED BUSINESS (LB)

| | REQUIRED: | PROVIDED: |
|---|---|---|
| MIN LOT AREA: | 20,000 SF | 50,747 SF |
| MIN LOT FRONTAGE: | 200 FT | 333.2 FT |
| MIN LOT WIDTH: | 50 FT | >> 50 FT |
| MIN FRONT YARD: | 75 FT | 15.3 FT* |
| MIN SIDE & REAR YARD: | 30 FT | 31 FT |
| MIN OPEN SPACE: | 50% (25,374 SF) | 50.4% (25,581) |

MIN OPEN SPACE: LOT AREA IN ZONE 3: 7,599 SF

| | | |
|---|---|---|
| GWPD ZONE 3: | 50% (3,800 SF) | 90% (6,815) |

*VARIANCE GRANTED BY ZBA

**FLOOR AREA REQUIREMENTS**

| | |
|---|---|
| LOT AREA = | 50,747 SF |
| DEVELOPABLE SITE AREA (DSA) = | 50,747 SF |
| MAX NET FLOOR AREA ALLOWED : 0.2 x 50,747 = | 10,149 SF |
| PROPOSED NET FLOOR AREA = | 8,856 SF |
| PROPOSED NET FLOOR AREA RATIO = | 0.175 |

**PARKING REQUIREMENTS:**
(FROM SECTION 5.4.6.2)

MAXIMUM # PARKING SPACES:
1 SPACE / 3,000 SF OF DSA X 50,747 SF = 16 SPACES

(FROM SECTION 6.3.1)

RETAIL USE :
1 SPACE / 300 SF OF NFA x 600 SF = 2 SPACES
VEHICLE SERVICE STATION :
2 SPACES + 3 SPACES / BAY 3 X 4 BAYS= 14 SPACES

NUMBER OF SPACES REQ'D = 16 SPACES
NUMBER OF SPACES PROVIDED = 16 SPACES
STANDARD SIZE = 15 AND HANDICAPPED SPACE(S) = 1

**SEWAGE FLOW:**
600 SF RETAIL X 50 GPD/1000 SF = 30 GPD (RETAIL)
4 SERVICE BAYS X 150 GOD/BAY = 600 GPD (SERVICE
TOTAL = 630 GPD (1,999 GPD PROVIDED)

# SITE PLAN IN ACTON, MA.

## LAYOUT PLAN

FOR: COUNTRY PROPERTIES, LLC
SCALE: 1"=20' APRIL 22, 2016


STAMSKI AND McNARY, INC.
1000 MAIN STREET ACTON, MASS.
ENGINEERING - PLANNING - SURVEYING


0 10 20 40 60 80

SM-5369 (5369 SITE 4.dwg) SHEET 4 OF 6

COMMONWEALTH OF MASSACHUSETTS GEORGE DIMAKARAKOS CIVIL No. 41281 REGISTERED PROFESSIONAL ENGINEER

COMMONWEALTH OF MASSACHUSETTS JOSEPH MARCH # 36384 PROFESSIONAL LAND SURVEYOR

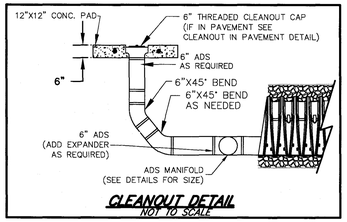


**CLEANOUT DETAIL**
NOT TO SCALE

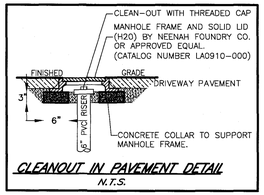


**CLEANOUT IN PAVEMENT DETAIL**
N.T.S.

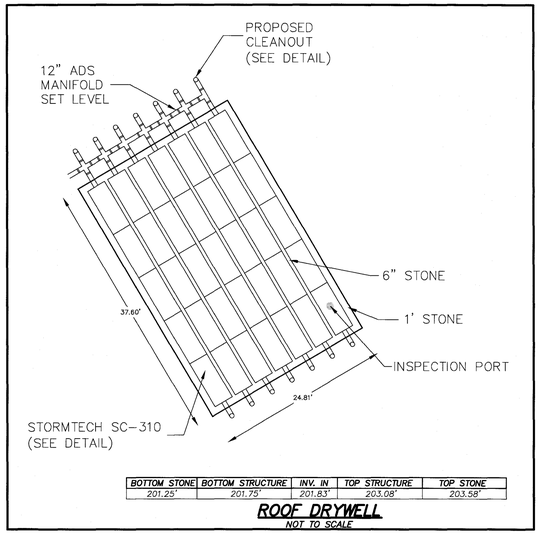


| BOTTOM STONE | BOTTOM STRUCTURE | INV. IN | TOP STRUCTURE | TOP STONE |
|---|---|---|---|---|
| 201.25' | 201.75' | 201.83' | 203.08' | 203.58' |

**ROOF DRYWELL**
NOT TO SCALE

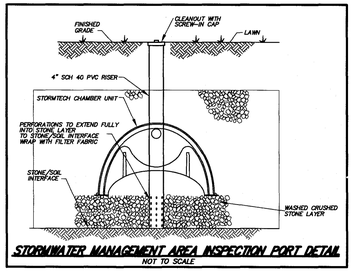


**STORMWATER MANAGEMENT AREA INSPECTION PORT DETAIL**
NOT TO SCALE

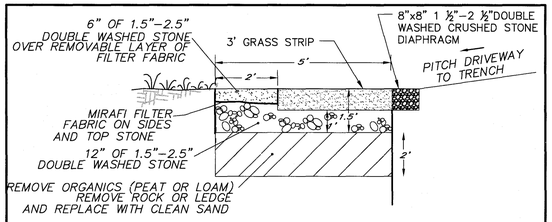


**INFILTRATION TRENCH 1 DETAIL**
NOT TO SCALE
FILE: Infiltration Trench Detail.dwg

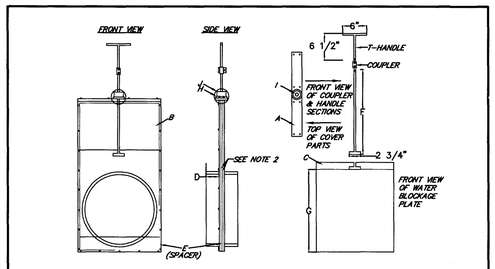


| | A | B | C | D | E | F | G | H | I | J |
|---|---|---|---|---|---|---|---|---|---|---|
| 10" | 3" X 13 1/4" | 13" X 22 1/2" | 13 3/4" X 11 3/4" | 3 5/8" | 16" | 11 3/4" | 1/2" PVC SLEEVE | 1/2" PVC COUPLER | 2" PVC DIM X |
| 12" | 3" X 16 1/4" | 16" X 22 1/2" | 16 1/4" X 13 1/4" | 3 5/8" | 16" | 13 1/4" | | | 1 1/2" PVC DIM X |
| 15" | 3" X 19" | 19" X 22 1/2" | 19 1/4" X 16 1/4" | 3 5/8" | 18 1/4" | 16 1/4" | | | |
| 18" | 3" X 22" | 22 1/4" X 22 3/4" | 19 7/8" X 22" | 3 5/8" | 22" | 20" | | | |

*ALL PVC MATERIAL IS T-5 THICK.
**STUBS ARE SDR 35 PVC MALE.

NOTES:
1. PROPOSED AGRI DRAIN SLIDE GATE VALVE TO BE INSTALLED IN DMH 1 AND 4 IN ACCORDANCE WITH MANUFACTURER'S SPECIFICATIONS. CONTACT AGRI DRAIN AT1-800-232-4742.
2. FLEXIBLE RUBBER SEALS AROUND OPENINGS ON BOTH FRONT AND BACK COVER, CREATE A WATER TIGHT SEAL AGAINST THE SLIDING WATER BLOCKAGE PLATE.
3. SLIDE GATE VALVE TO BE ATTACHED TO 12" ADS DRAIN PIPE WITH A FLEX COUPLER AS MANUFACTURED BY TERNICO. PH. 1-800-321-1283.

**SLIDE GATE DETAIL**
N.T.S.

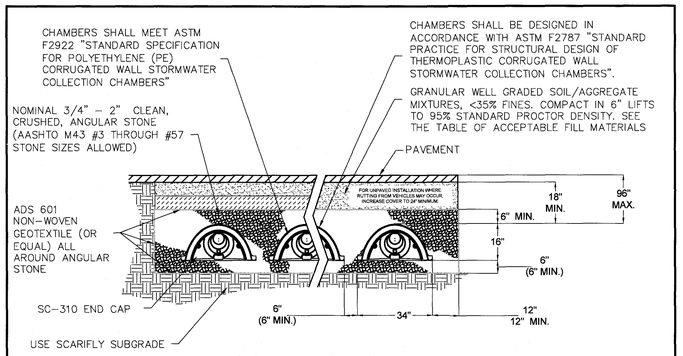


THE INSTALLED CHAMBER SYSTEM SHALL PROVIDE THE LOAD FACTORS SPECIFIED IN THE AASHTO LFRD BRIDGE DESIGN SPECIFICATIONS SECTION 12.12 FOR EARTH AND LIVE LOADS WITH CONSIDERATION FOR IMPACT AND MULTIPLE VEHICLE PRESENCES.

**STORMTECH SC 310**
NOT TO SCALE

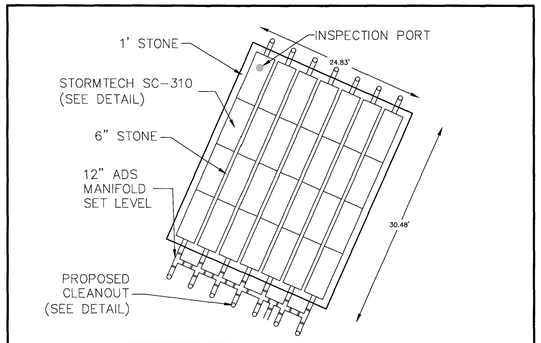


| BOTTOM STONE | BOTTOM STRUCTURE | INV. IN | TOP STRUCTURE | TOP STONE |
|---|---|---|---|---|
| 200.50' | 201.00' | 201.08' | 202.33' | 202.83' |

**SUBSURFACE INFILTRATION AREA 1**
NOT TO SCALE

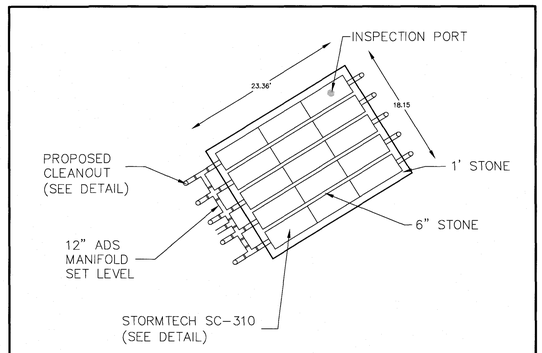


| BOTTOM STONE | BOTTOM STRUCTURE | INV. IN | TOP STRUCTURE | TOP STONE |
|---|---|---|---|---|
| 198.00' | 198.50' | 198.58' | 199.83' | 200.33' |

**SUBSURFACE INFILTRATION AREA 2**
NOT TO SCALE

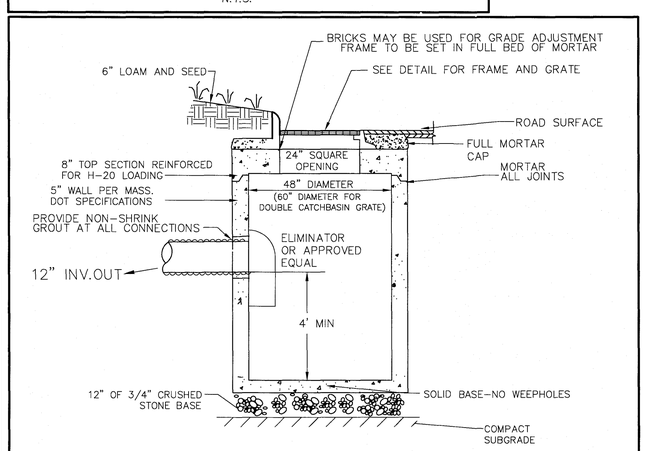


**PRECAST CATCH BASIN DETAIL**
NOT TO SCALE

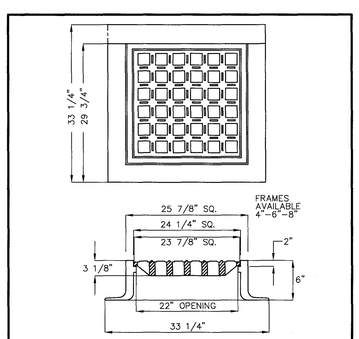


FULLY MACHINED AND INTERCHANGABLE FRAMES AND COVERS.
HIGH QUALITY MATERIALS AND WORKMANSHIP.
COAL TAR EPOXY PAINTED.
NO ROCK COVERS.
H-20 LOADING RATE
WEIGHT OF GRATE 215 LBS.
FRAME - 4 FLANGES - NO. 295 -- 3 FLANGES NO. 265
LEBARON LF-248-2 OR EQUAL

**CATCH BASIN FRAME AND GRATE MASS. STD. DETAIL**
NOT TO SCALE

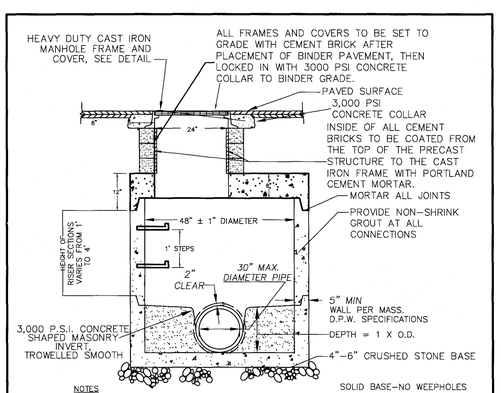


NOTES
1. MANHOLE TO CONFORM TO MASS. D.P.W. STANDARD 202.4.0.
2. FACE OF PIPE FLUSH OR NOT TO PROJECT MORE THAN 4" FROM FACE OF WALL ALONG CENTERLINE OF PIPE.

**PRECAST CONCRETE DRAIN MANHOLE DETAIL**
NOT TO SCALE

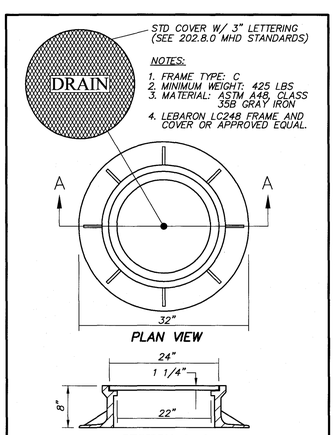


NOTES:
1. FRAME TYPE: C
2. MINIMUM WEIGHT: 425 LBS
3. MATERIAL: ASTM A48, CLASS 35B GRAY IRON
4. LEBARON LC248 FRAME AND COVER OR APPROVED EQUAL.

**MANHOLE FRAME AND COVER**
NOT TO SCALE

# SITE PLAN IN ACTON, MA.

## CONSTRUCTION DETAILS

FOR: COUNTRY PROPERTIES, LLC
SCALE: 1"=20' APRIL 22, 2016


STAMSKI AND McNARY, INC.
1000 MAIN STREET ACTON, MASS.
ENGINEERING - PLANNING - SURVEYING


0 10 20 40 60 80

SM-5369 (5369 SITE 4.dwg) SHEET 5 OF 6

COMMONWEALTH OF MASSACHUSETTS GEORGE DIMAKARAKOS CIVIL No. 41281 REGISTERED PROFESSIONAL ENGINEER

COMMONWEALTH OF MASSACHUSETTS JOSEPH MARCH #36384 PROFESSIONAL LAND SURVEYOR

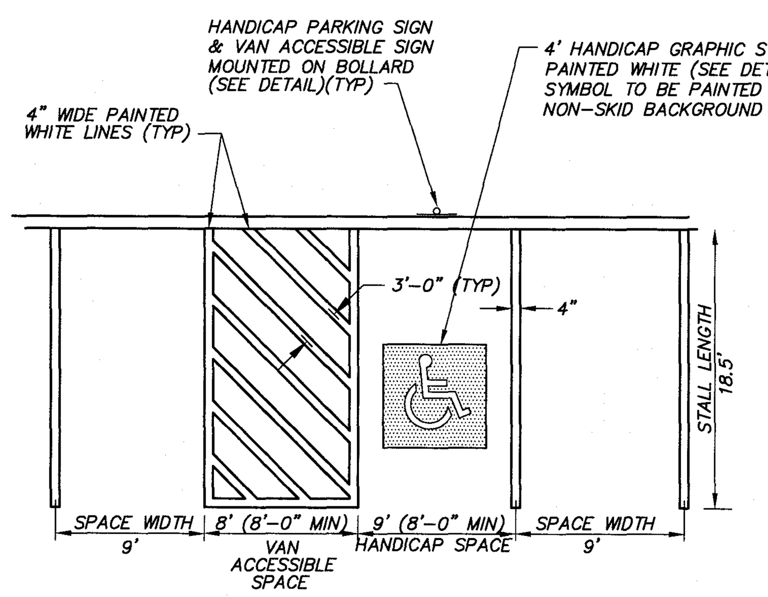


## STALL STRIPING
NOT TO SCALE

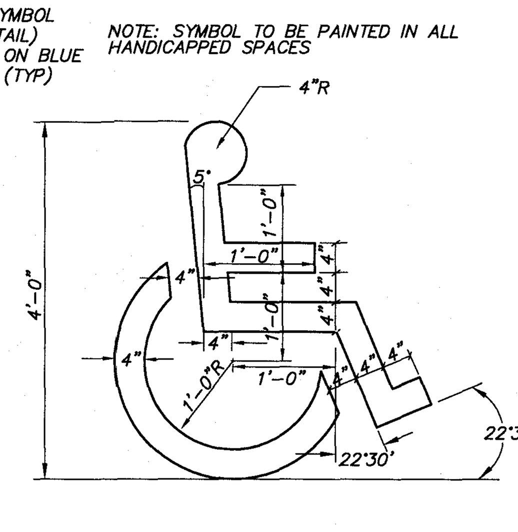


## PAINTED HANDICAP SYMBOL
NOT TO SCALE

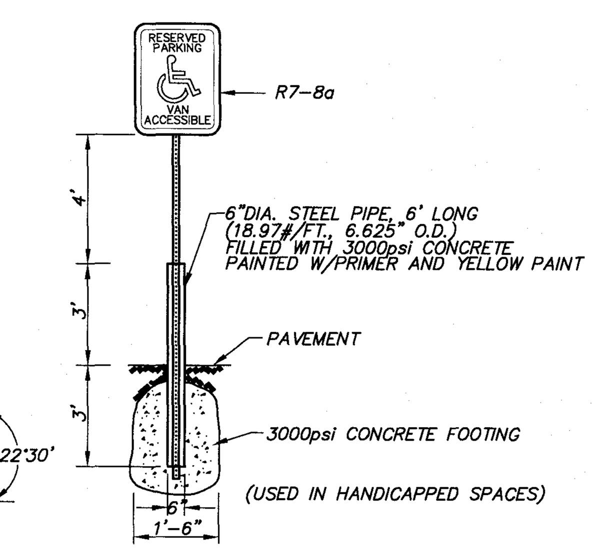


## HANDICAP SIGN AND BOLLARD
NOT TO SCALE

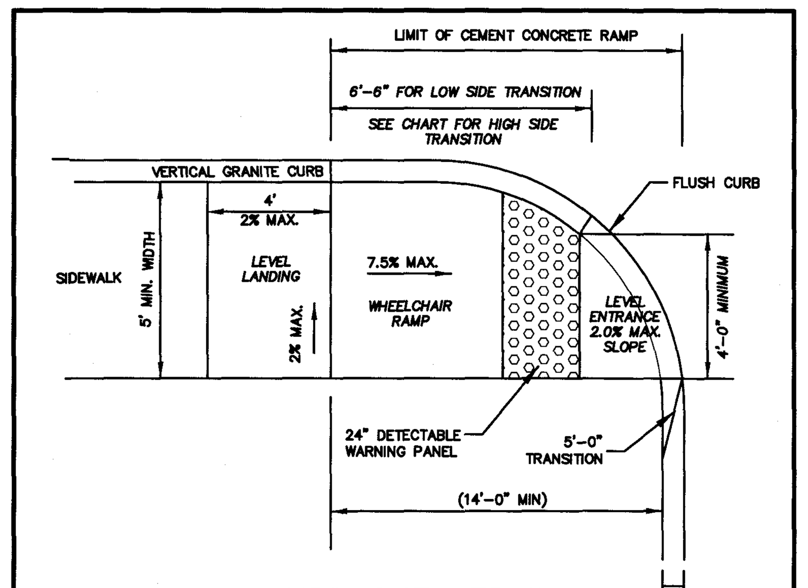


## CURB CUT DETAIL
NOT TO SCALE

(E 107.6.0R)

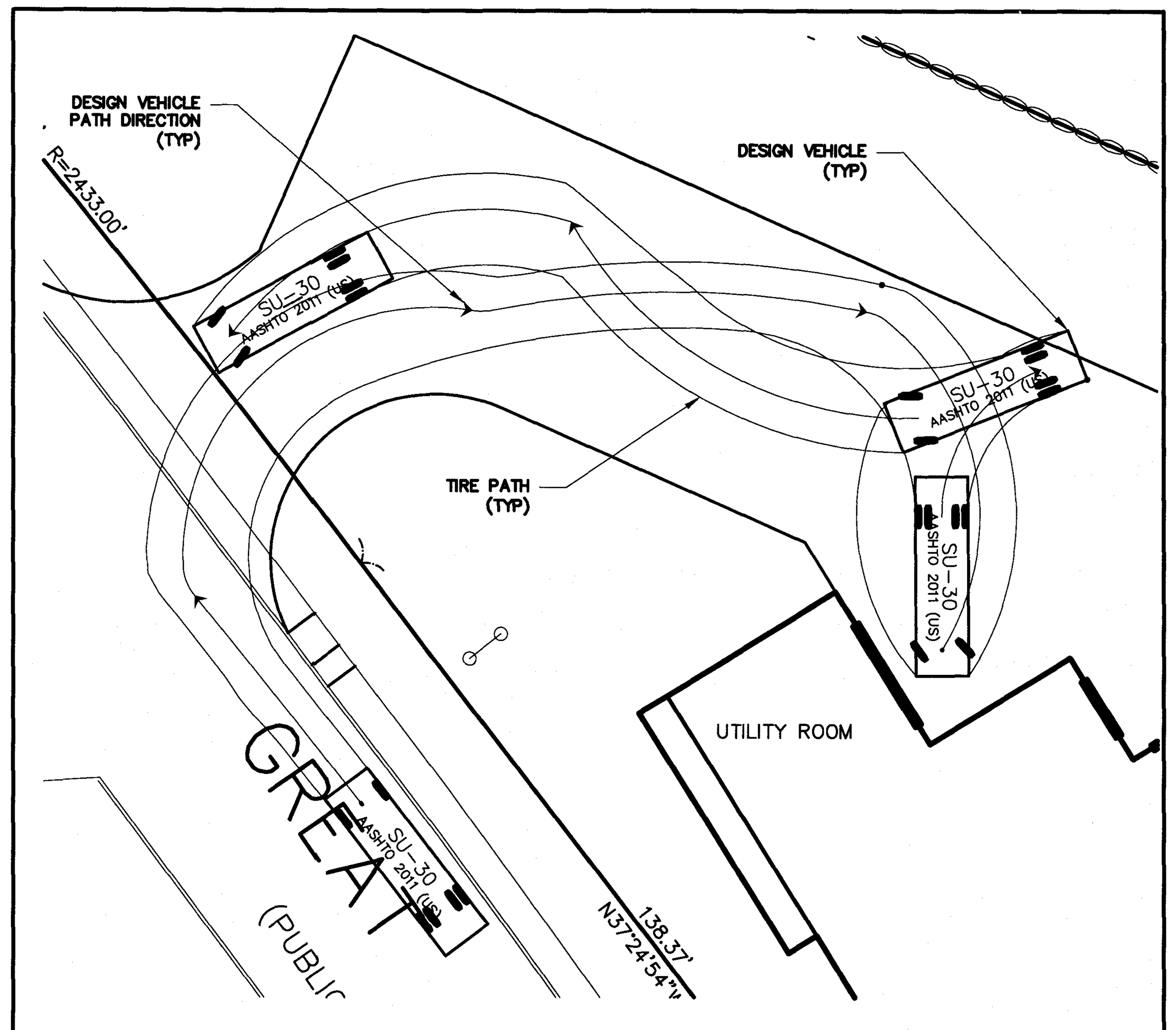


## SU-30 DESIGN VEHICLE MANEUVERING DETAIL
SCALE: 1"=20'

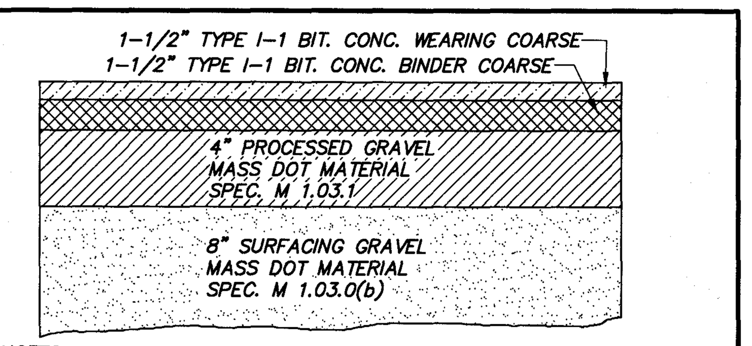


NOTES
1. ALL GRAVEL IS TO BE COMPACTED TO 95% MAX. DRY DENSITY.
2. AREA UNDER GRAVEL BASE COURSE TO BE FREE OF ORGANIC MATERIAL, TRASH, ECT. FILL WHERE REQUIRED SHALL CONFORM TO MASS. DOT 1.03.c. 6" MAX. STONE
3. GRAVEL SHALL EXTEND 6" BEYOND ALL EDGE OF PAVEMENT LOCATIONS MATERIAL, TRASH, ECT. FILL WHERE REQUIRED SHALL CONFORM TO MASS. DOT 1.03.c. 6" MAX. STONE

## PAVEMENT DETAIL
NOT TO SCALE

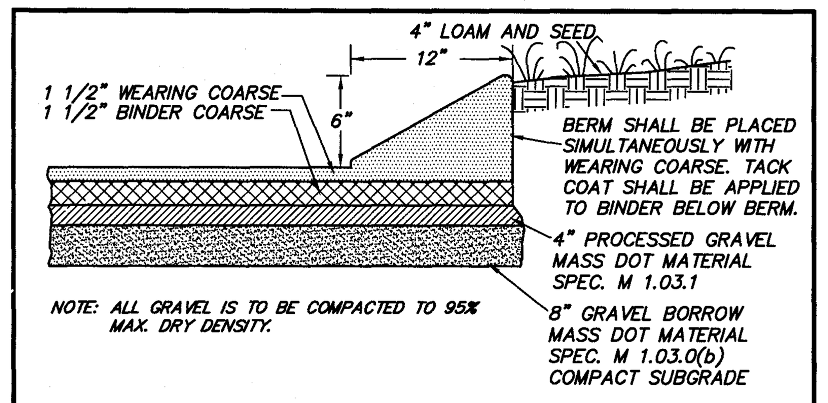


NOTE: ALL GRAVEL IS TO BE COMPACTED TO 95% MAX. DRY DENSITY.

## CAPE COD BERM DETAIL
NOT TO SCALE

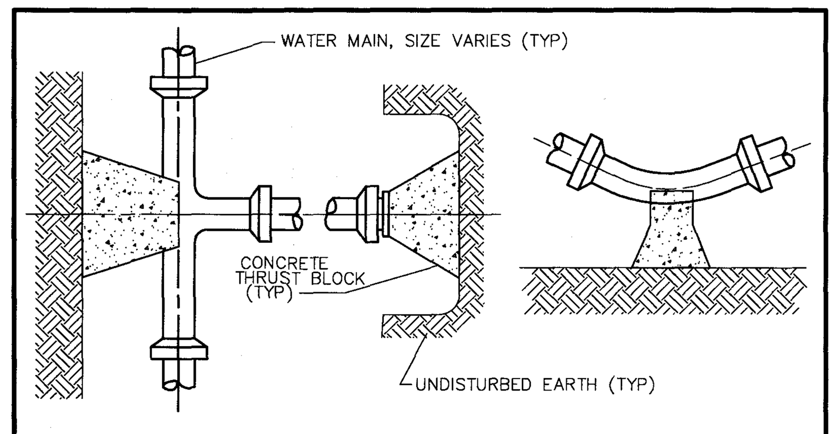


## TYPICAL THRUST BLOCK DETAIL
NOT TO SCALE

## GENERAL NOTES

1. ALL UNDERGROUND UTILITIES SHOWN HEREON WERE COMPILED ACCORDING TO AVAILABLE RECORD PLANS FROM VARIOUS UTILITY COMPANIES AND PUBLIC AGENCIES AND ARE APPROXIMATE ONLY. ACTUAL LOCATIONS MUST BE DETERMINED IN THE FIELD BEFORE EXCAVATING, BLASTING, INSTALLING, BACKFILLING, GRADING, PAVEMENT RESTORATION OR REPAIRING. ALL UTILITY COMPANIES, PUBLIC AND PRIVATE, MUST BE CONTACTED INCLUDING THOSE IN CONTROL OF UTILITIES NOT SHOWN ON THIS PLAN. SEE CHAPTER 370, ACTS OF 1963 MASS. WE ASSUME NO RESPONSIBILITY FOR DAMAGE INCURRED AS A RESULT OF UTILITIES OMITTED OR INACCURATELY SHOWN. BEFORE PLANNING FUTURE CONNECTIONS, THE APPROPRIATE PUBLIC UTILITY ENGINEERING DEPARTMENT MUST BE CONSULTED. DIG-SAFE TELE. NO. (888) 344-7233.
2. UNLESS OTHERWISE SPECIFIED ON THESE PLANS, ALL CONSTRUCTION METHODS AND MATERIALS SHALL COMPLY WITH SPECIFICATIONS OUTLINED IN THE ACTON ZONING BYLAW AND THE ACTON RULES AND REGULATIONS FOR SITE PLAN SPECIAL PERMITS.
3. ALL LIMITS OF WORK SHALL BE LOCATED IN THE FIELD PRIOR TO CONSTRUCTION OR SITE CLEARING.
4. ALL WATER PIPES, HYDRANTS, GATE VALVES AND OTHER APPURTENANCES SHALL BE INSTALLED IN ACCORDANCE WITH THE CONCORD WATER SUPPLY DISTRICT REQUIREMENTS.
5. ALL STUMPS AND OTHER CONSTRUCTION DEBRIS SHALL BE PROPERLY REMOVED ANY FILL MATERIAL USED SHALL BE FREE OF HAZARDOUS MATERIALS OR WASTE.
6. ALL DRAIN PIPES SHALL BE ADS N-12 UNLESS OTHERWISE SHOWN.
7. TRANSPORTATION OF FILL, EARTH, OR CONSTRUCTION DEBRIS TO OR FROM THE SITE SHALL BE RESTRICTED TO DAYTIME HOURS (9 AM TO 4 PM) MONDAY THROUGH FRIDAY.
8. CONSTRUCTION SHALL BE IN ACCORDANCE WITH 521 CMR – ARCHITECTURAL ACCESS BOARD REGULATIONS. ALL PROPOSED SIDEWALKS SHALL HAVE A MAX. CROSS SLOPE OF 2%. THE PROPOSED HANDICAP PARKING STALLS AND ADJACENT AREAS SHALL HAVE A MAX. SLOPE OF 2% IN ALL DIRECTIONS.
9. IT IS ANTICIPATED THE EXISTING SEPTIC TANKS, SOIL ABSORPTION SYSTEM, AND WATER LINE WILL BE ENCOUNTERED DURING CONSTRUCTION. THE EXISTING ONSITE SOIL ABSORPTION SYSTEM AND ASSOCIATED TANKS SHALL BE ABANDONED PURSUANT TO 310CMR 15.354 ABANDONMENT OF SYSTEMS OR REMOVED FROM SITE.
10. TURNING RADII HAS BEEN DESIGNED TO ACCOMMODATE A SU-30 VEHICLE.
11. ANY FILL MATERIAL USED SHALL BE FREE OF HAZARDOUS MATERIALS OR WASTE.
12. THE DEVELOPER IS RESPONSIBLE FOR CLEAN UP OF ANY SAND, DIRT OR DEBRIS WHICH ERODES FROM THE SITE ONTO GREAT ROAD AND TO REMOVE SILT OR DEBRIS THAT ENTERS ANY EXISTING DRAINAGE SYSTEM INCLUDING, BUT NOT LIMITED TO, CATCH BASIN SUMPS, PIPE LINES, MANHOLES, AND DITCHES IMMEDIATELY UPON DISCOVERY.
13. SIGNAGE LOCATION AND PERMIT SUBJECT TO TOWN APPROVAL.

## DRAINAGE SYSTEM OPERATION AND MAINTENANCE PLAN

1. BMP OWNER: COUNTRY PROPERTIES, LLC
6 PROCTOR STREET
ACTON, MA 01720

2. PARTIES RESPONSIBLE FOR MAINTENANCE: SAME AS ABOVE

3. SCHEDULE FOR INSPECTION AND MAINTENANCE:

DEEP SUMP AND HOODED CATCH BASIN:
THE DEEP SUMPS FOR THE CATCH BASINS SHALL BE INSPECTED AND CLEANED QUARTERLY. THE CATCH BASINS HAVE A FOUR FOOT DEEP SUMP AND THE WATER LEVEL IS MAINTAINED BY THE DISCHARGE PIPE AT FOUR FEET. THE DISCHARGE PIPE IS HIDDEN FROM VIEW BY A HOODED OUTLET.

THE DEPTH OF THE SEDIMENT IN THE BASIN SHALL NOT EXCEED A DEPTH OF 18 INCHES AS DETERMINED BY PROBING WITH A STICK. IF THE STICK HITS THE BOTTOM WITHIN 30 INCHES OF THE WATER LEVEL, MORE THAN 18 INCHES OF SEDIMENT HAS ACCUMULATED AND MUST BE REMOVED. LICENSED PERSONS SHOULD REMOVE AND DISPOSE OF THE CONTENTS OF THE SUMP IN ACCORDANCE WITH APPLICABLE REGULATIONS.

VORTSENTRY/CDS 2015-4 UNITS
INSPECTION AND MAINTENANCE OF THE UNITS CAN BE PERFORMED FROM THE SURFACE, WITHOUT ENTRY INTO THE UNITS. PERFORM MAINTENANCE A MINIMUM OF TWICE PER YEAR. THE UNITS SHOULD BE CLEANED ONCE THE SEDIMENT HAS REACHED A DEPTH OF TWO FEET IN THE CHAMBER. PERFORM FREQUENT INSPECTIONS DURING THE FIRST YEAR OF INSTALLATION TO ACCURATELY ESTABLISH THE MAINTENANCE SCHEDULE. REMOVE OIL AND SEDIMENT THROUGH THE MANHOLE COVER WITH THE USE OF A VACCUUM TRUCK. DISPOSAL FROM THE UNITS ARE SIMILAR TO THAT OF ANY CONTECH AREA MARKETING MANAGER PRIOR TO DISPOSING THE SEPARATOR CONTENTS.

INFILTRATION TRENCH:
INFILTRATION TRENCH SHALL BE INSPECTED ANNUALLY. THE FILTER FABRIC SHALL BE INSPECTED FOR EXCESSIVE SEDIMENT BUILD UP. IF APPRECIABLE AMOUNTS OF SEDIMENT ARE OBSERVED THE TOP LAYER OF STONE SHALL BE MOVED ASIDE AND THE FILTER FABRIC CLEANED OR REPLACED. THE TOP LAYER OF STONE SHALL THEN BE WASHED AND PLACED OVER THE FILTER FABRIC.

SUBSURFACE RECHARGE AREAS:
THE INFILTRATION BED CLEANOUTS SHALL BE OPENED AND INSPECTED ANNUALLY. IF THE WATER LEVEL IS MORE THAN 24 INCHES ABOVE THE BOTTOM OF STONE ELEVATION, THE CHAMBERS SHALL BE FLUSHED WITH A PRESSURE HOSE, AND IF AFTER 24 HOURS THE WATER LEVEL HAS NOT DROPPED, THE INFILTRATION BED MAY HAVE TO BE REPLACED. (NOTE: THE RELATIVE ELEVATIONS OF CLEANOUT RIMS AND THE BOTTOM OF STONE SHALL BE TAKEN FROM THE SITE PLAN AS-BUILT. THIS INSPECTION SHULD NOT BE DONE WITHIN 72 HOURS OF A RAIN EVENT.)

SLIDE GATES:
SLIDE GATES FUNCTION TO PREVENT THE FLOW OF WATER IN THE EVENT OF A SPILL OF HAZARDOUS MATERIALS. THE NORMAL OPERATING POSITION IS OPEN. SLIDE GATES ARE TO BE CLOSED IN THE EVENT OF A SPILL. 1 SLIDE GATE IS LOCATED ON THE SITE.

EMERGENCY CONTACTS:
IN THE EVENT OF A HAZARDOUS MATERIALS SPILL ON THE SITE THE FOLLOWING PARTIES SHALL BE CONTACTED: FIRE DEPARTMENT: PH: 978-264-9645

RECORDS:
THE OWNER SHALL MAINTAIN AN INSPECTION LOG OF ALL ELEMENTS OF THE STORM WATER MANAGEMENT PLAN. THE OWNER SHALL MAINTAIN A MAINTENANCE LOG DOCUMENTING THE INSPECTION AND MAINTENANCE OF THE DRAINAGE STRUCTURES UNDER HIS CONTROL. A COPY OF THE EROSION CONTROL AND STORM WATER MAINTENANCE PLAN AND INSPECTION LOGS SHALL BE KEPT ONSITE AT ALL TIMES.

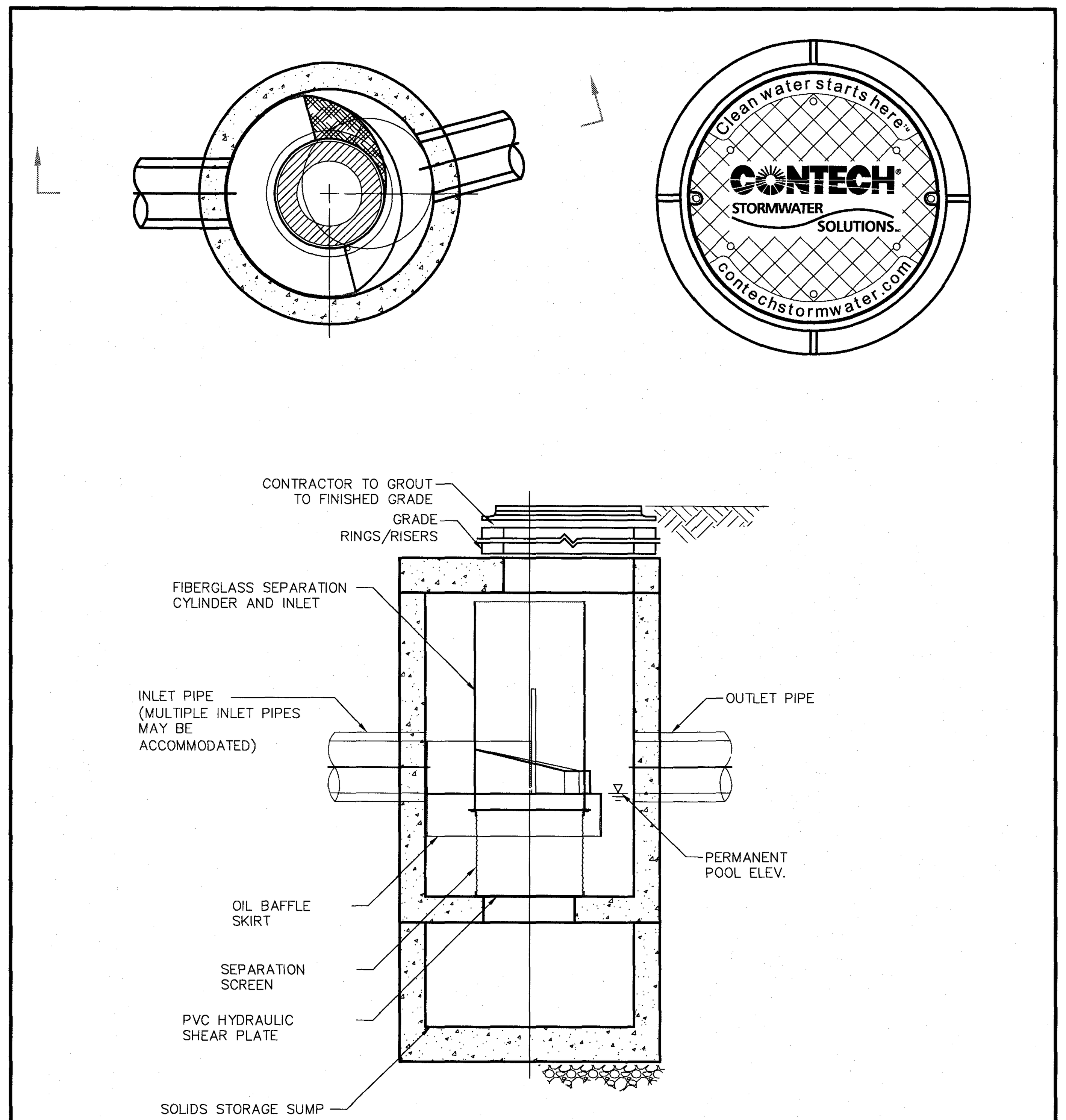


## CONTECH CDS 2015-4 MANHOLE DETAIL

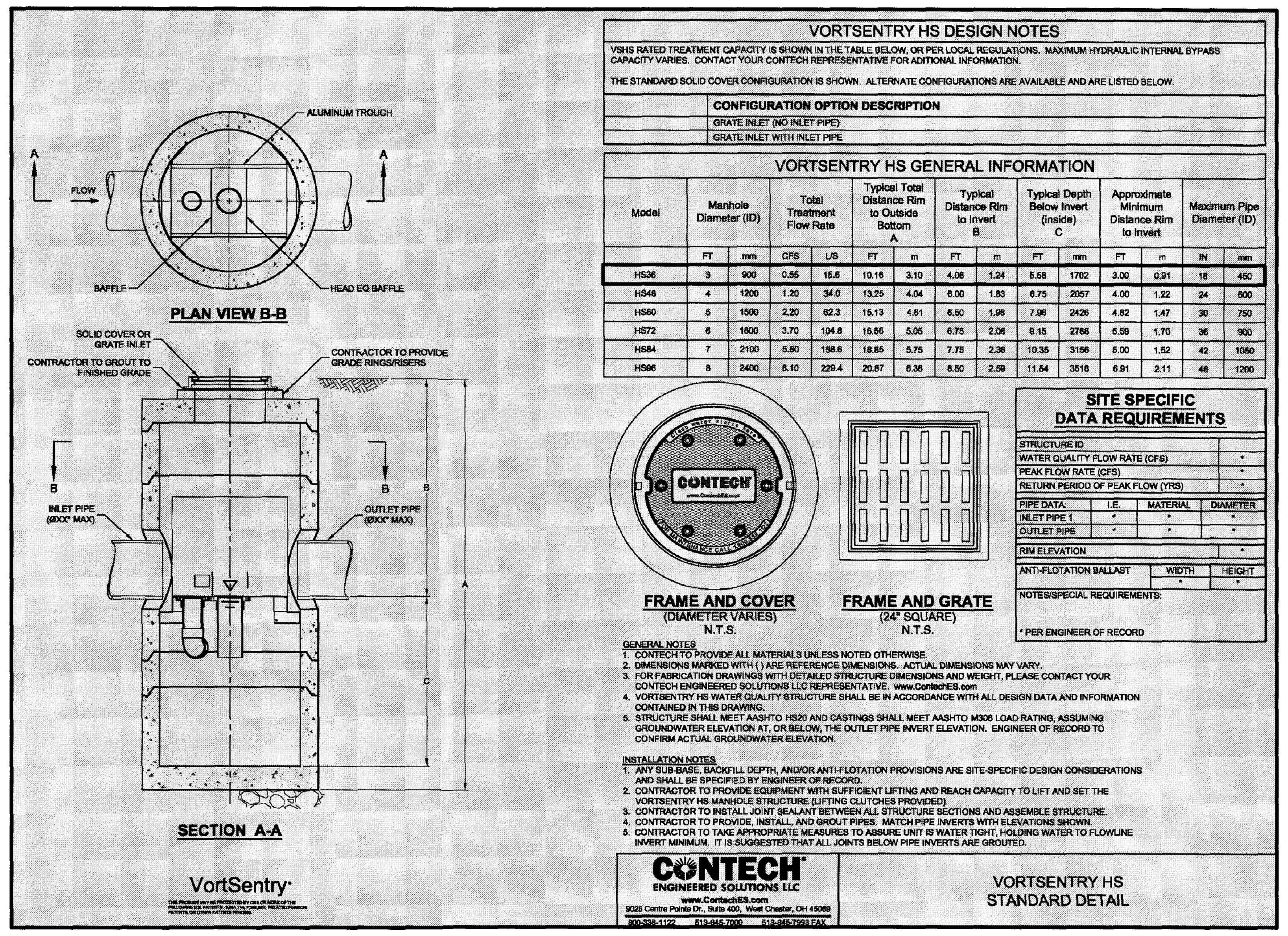


VORTSENTRY HS DESIGN NOTES

VSHS RATED TREATMENT CAPACITY IS SHOWN IN THE TABLE BELOW, OR PER LOCAL REGULATIONS. MAXIMUM HYDRAULIC INTERNAL BYPASS CAPACITY VARIES. CONTACT YOUR CONTECH REPRESENTATIVE FOR ADITIONAL INFORMATION.

THE STANDARD SOLID COVER CONFIGURATION IS SHOWN. ALTERNATE CONFIGURATIONS ARE AVAILABLE AND ARE LISTED BELOW.

| | CONFIGURATION OPTION DESCRIPTION |
|---|---|
| | GRATE INLET (NO INLET PIPE) |
| | GRATE INLET WITH INLET PIPE |

VORTSENTRY HS GENERAL INFORMATION

| Model | Manhole Diameter (ID) | | Total Treatment Flow Rate | | Typical Total Distance Rim to Outside Bottom A | | Typical Distance Rim to Invert B | | Typical Depth Below Invert (inside) C | | Approximate Minimum Distance Rim to Invert | | Maximum Pipe Diameter (ID) | |
|---|---|---|---|---|---|---|---|---|---|---|---|---|---|---|
| | FT | mm | CFS | L/S | FT | m | FT | m | FT | mm | FT | m | IN | mm |
| HS36 | 3 | 900 | 0.55 | 15.6 | 10.16 | 3.10 | 4.08 | 1.24 | 5.58 | 1702 | 3.00 | 0.91 | 18 | 450 |
| HS48 | 4 | 1200 | 1.20 | 34.0 | 13.25 | 4.04 | 6.00 | 1.83 | 6.75 | 2057 | 4.00 | 1.22 | 24 | 600 |
| HS60 | 5 | 1500 | 2.20 | 62.3 | 15.13 | 4.61 | 6.50 | 1.98 | 7.96 | 2426 | 4.82 | 1.47 | 30 | 750 |
| HS72 | 6 | 1800 | 3.70 | 104.8 | 16.56 | 5.05 | 6.75 | 2.06 | 9.15 | 2788 | 5.59 | 1.70 | 36 | 900 |
| HS84 | 7 | 2100 | 5.60 | 158.6 | 18.85 | 5.75 | 7.75 | 2.36 | 10.35 | 3155 | 5.00 | 1.52 | 42 | 1050 |
| HS96 | 8 | 2400 | 8.10 | 229.4 | 20.87 | 6.36 | 8.50 | 2.59 | 11.54 | 3518 | 6.91 | 2.11 | 48 | 1200 |

FRAME AND COVER
(DIAMETER VARIES)
N.T.S.

FRAME AND GRATE
(24" SQUARE)
N.T.S.

SITE SPECIFIC DATA REQUIREMENTS

| | | | |
|---|---|---|---|
| STRUCTURE ID | | | |
| WATER QUALITY FLOW RATE (CFS) | | | * |
| PEAK FLOW RATE (CFS) | | | * |
| RETURN PERIOD OF PEAK FLOW (YRS) | | | * |
| PIPE DATA: | I.E. | MATERIAL | DIAMETER |
| INLET PIPE 1 | * | * | * |
| OUTLET PIPE | * | * | * |
| RIM ELEVATION | | | * |
| ANTI-FLOTATION BALLAST | | WIDTH | HEIGHT |
| | | * | * |
| NOTES/SPECIAL REQUIREMENTS: | | | |
| * PER ENGINEER OF RECORD | | | |

GENERAL NOTES
1. CONTECH TO PROVIDE ALL MATERIALS UNLESS NOTED OTHERWISE.
2. DIMENSIONS MARKED WITH ( ) ARE REFERENCE DIMENSIONS. ACTUAL DIMENSIONS MAY VARY.
3. FOR FABRICATION DRAWINGS WITH DETAILED STRUCTURE DIMENSIONS AND WEIGHT, PLEASE CONTACT YOUR CONTECH ENGINEERED SOLUTIONS LLC REPRESENTATIVE. www.ContechES.com
4. VORTSENTRY HS WATER QUALITY STRUCTURE SHALL BE IN ACCORDANCE WITH ALL DESIGN DATA AND INFORMATION CONTAINED IN THIS DRAWING.
5. STRUCTURE SHALL MEET AASHTO HS20 AND CASTINGS SHALL MEET AASHTO M306 LOAD RATING, ASSUMING GROUNDWATER ELEVATION AT, OR BELOW, THE OUTLET PIPE INVERT ELEVATION. ENGINEER OF RECORD TO CONFIRM ACTUAL GROUNDWATER ELEVATION.

INSTALLATION NOTES
1. ANY SUB-BASE, BACKFILL DEPTH, AND/OR ANTI-FLOTATION PROVISIONS ARE SITE-SPECIFIC DESIGN CONSIDERATIONS AND SHALL BE SPECIFIED BY ENGINEER OF RECORD.
2. CONTRACTOR TO PROVIDE EQUIPMENT WITH SUFFICIENT LIFTING AND REACH CAPACITY TO LIFT AND SET THE VORTSENTRY HS MANHOLE STRUCTURE (LIFTING CLUTCHES PROVIDED).
3. CONTRACTOR TO INSTALL JOINT SEALANT BETWEEN ALL STRUCTURE SECTIONS AND ASSEMBLE STRUCTURE.
4. CONTRACTOR TO PROVIDE, INSTALL, AND GROUT PIPES. MATCH PIPE INVERTS WITH ELEVATIONS SHOWN.
5. CONTRACTOR TO TAKE APPROPRIATE MEASURES TO ASSURE UNIT IS WATER TIGHT, HOLDING WATER TO FLOWLINE INVERT MINIMUM. IT IS SUGGESTED THAT ALL JOINTS BELOW PIPE INVERTS ARE GROUTED.

CONTECH ENGINEERED SOLUTIONS LLC
www.ContechES.com
9025 Centre Pointe Dr., Suite 400, West Chester, OH 45069
800-338-1122 513-645-7000 513-645-7993 FAX

VORTSENTRY HS STANDARD DETAIL

# SITE PLAN
IN
# ACTON, MA.

## CONSTRUCTION DETAILS
FOR: COUNTRY PROPERTIES, LLC
SCALE: 1"=20' APRIL 22, 2016

STAMSKI AND McNARY, INC.
1000 MAIN STREET ACTON, MASS.
*ENGINEERING – PLANNING – SURVEYING*
0 10 20 40 60 80
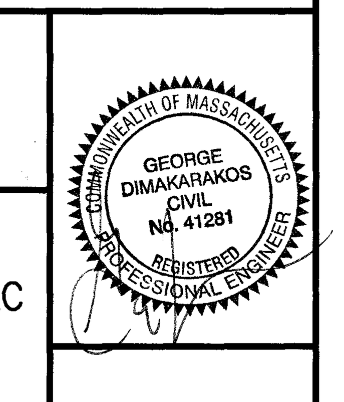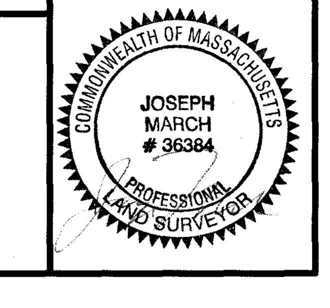
SM-5369 (5369 SITE 4.dwg) SHEET 6 OF 6