NOTES:

1. HDPE JOISTS ARE TO BE CONTRACTOR DESIGNED AND ARE NOT SHOWN IN ABUTMENT PLAN VIEW FOR CLARITY.

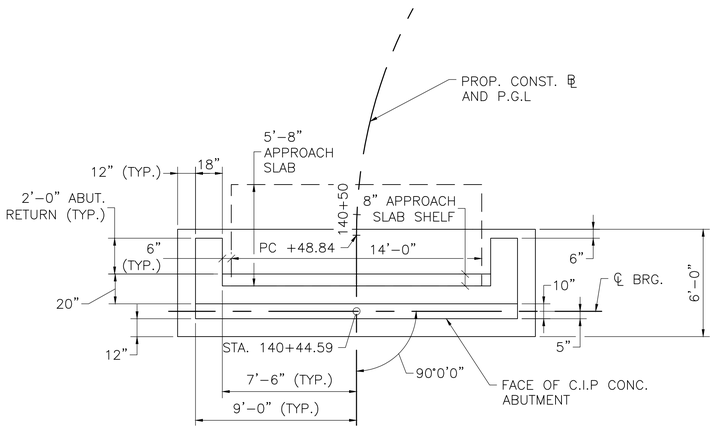

ABUTMENT 4 – PLAN VIEW

SCALE: 1/4" = 1'-0"

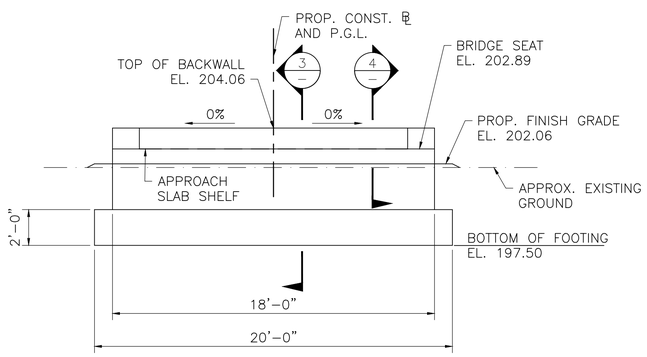

ABUTMENT 4 – ELEVATION

SCALE: 1/4" = 1'-0"

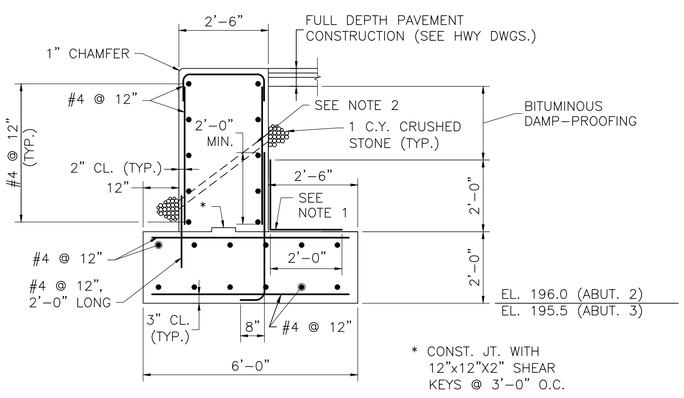

SECTION 5

SCALE: 1/2" = 1'-0"

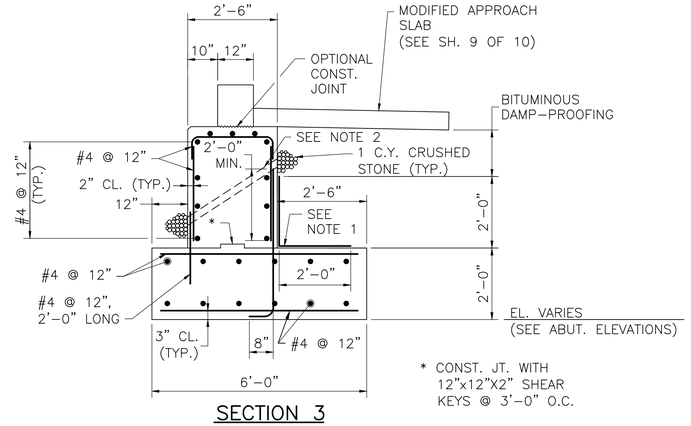

SECTION 3

SCALE: 1/2" = 1'-0"

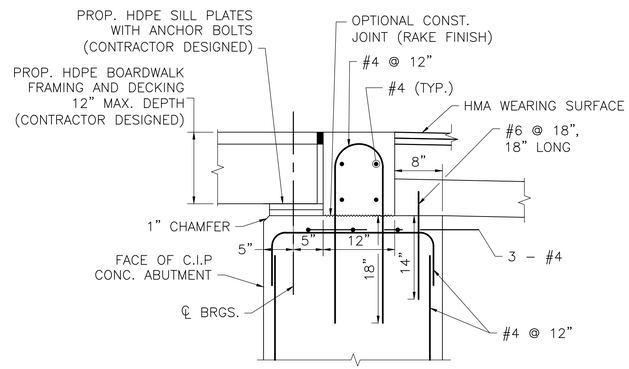

SECTION 4

SCALE: 1" = 1'-0"

DETAILS AT ABUTMENT NOTES:

1. ALL REINFORCEMENT SHOWN IN THIS DETAIL SHALL BE EPOXY COATED.
2. ALL BACKWALL CONCRETE ABOVE THE OPTIONAL CONSTRUCTION JOINT LOCATED AT THE BRIDGE SEAT SHALL BE 4000 PSI, $\frac{3}{4}$ IN, 610 CEMENT CONCRETE. THE CONSTRUCTION JOINT SHALL BE GIVEN A RAKE FINISH WITH A $\frac{1}{4}$" MINIMUM AMPLITUDE.
3. TOP OF BACKWALL SHALL BE TROWELLED SMOOTH PARALLEL TO THE PROFILE GRADE.
4. THE DECK JOINT SHALL CONFORM TO ADA/AAB REQUIREMENTS.

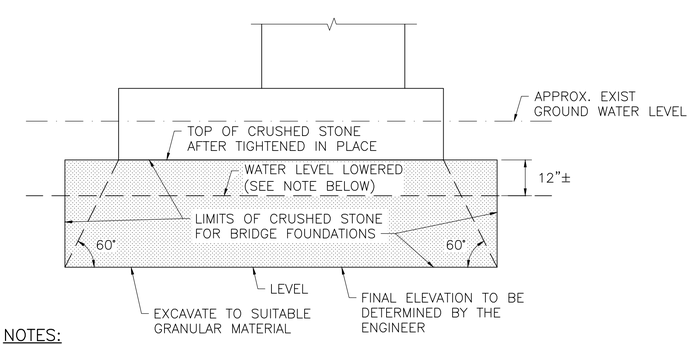

NOTES:

1. LOWER WATER LEVEL AS MUCH AS POSSIBLE WITHOUT DISTURBING THE GRANULAR SOIL (SIDES AND BOTTOM) AND TIGHTEN THE CRUSHED STONE IN PLACE (SEE STANDARD SPECIFICATIONS).
2. SAME TREATMENT IS TO BE USED AT ENDS OF WALLS AND ABUTMENTS.

LIMITS OF CRUSHED STONE FOR BRIDGE FOUNDATIONS

SCALE: 1/2" = 1'-0"

MAYNARD & ACTON
ASSABET RIVER RAIL TRAIL

STATE	FED. AID PROJ. NO.	SHEET NO.	TOTAL SHEETS
MA	CMAQ/STP-TE-002S(836)	151	230
PROJECT FILE NO. 604531			

ABUTMENT PLAN, ELEVATION & SECTIONS

ABUTMENT NOTES:

1. MEMBRANE WATERPROOFING AND 8"x16"x2", 4000 PSI, $\frac{3}{4}$ IN, 610 CEMENT CONCRETE BLOCKS LAID IN MORTAR OR OTHER WATERPROOFING PROTECTIVE COURSE, MIN. 2" THICK AS SPECIFIED IN MHD STANDARD SPECIFICATIONS.
2. 4" ø WEEP HOLES 10'-0" O.C. (JUST ABOVE PROTECTIVE COURSE). PROVIDE 1 CUBIC YARD OF CRUSHED STONE AT EACH END OF WEEP HOLE.
3. ABUTMENT STEM AND BACKWALL CONCRETE SHALL BE 4000 PSI, $\frac{3}{4}$ IN, 610 CEMENT CONCRETE. ABUTMENT FOOTING CONCRETE SHALL BE 4000 PSI, $1\frac{1}{2}$ IN, 565 CEMENT CONCRETE.
4. THE FACTORED BEARING PRESSURE = 1.77 KSF AS PER AASHTO LRFD BRIDGE DESIGN SPECIFICATIONS STRENGTH I LOAD COMBINATION.

   ABUTMENTS 1, 2 & 3:
   FACTORED BEARING RESISTANCE = 8.80 KSF. FACTORED BEARING RESISTANCE IS THE PRODUCT OF THE NOMINAL BEARING RESISTANCE AND A RESISTANCE FACTOR OF 0.45.

   ABUTMENT 4:
   FACTORED BEARING RESISTANCE = 8.30 KSF. FACTORED BEARING RESISTANCE IS THE PRODUCT OF THE NOMINAL BEARING RESISTANCE AND A RESISTANCE FACTOR OF 0.45.

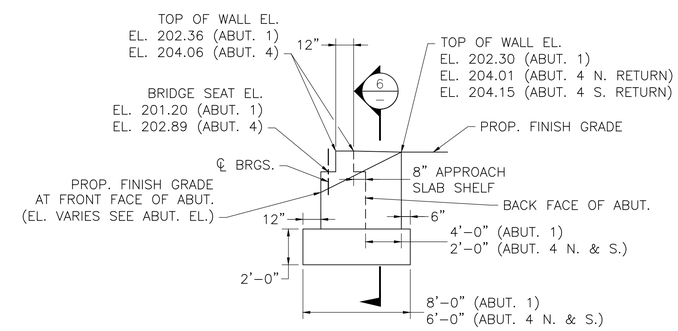

TYPICAL ABUTMENT RETURN – ELEVATION

SCALE: 1/4" = 1'-0"

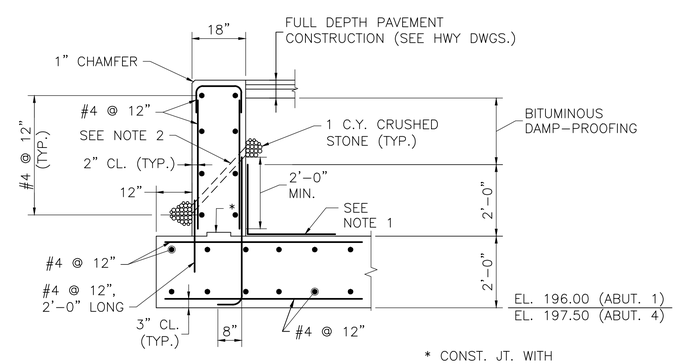

SECTION 6

SCALE: 1/2" = 1'-0"

DATE	DESCRIPTION
SEPT. 19, 2015	ISSUED FOR CONSTRUCTION
USE ONLY PRINTS OF LATEST DATE	

604531_(A02034)BR7_8.DWG Plotted on 8-Oct-2015 1:54 PM
Final Structural Submittal (SF) 19-September-2015

MAYNARD & ACTON
ASSABET RIVER RAIL TRAIL

STATE	FED. AID PROJ. NO.	SHEET NO.	TOTAL SHEETS
MA	CMAQ/STP-TE-002S(836)	200	230
PROJECT FILE NO.	604531		

CROSS SECTIONS

HOR. SCALE IN FEET
4 0 4 8
4 0 4 8
VER. SCALE IN FEET

118+00

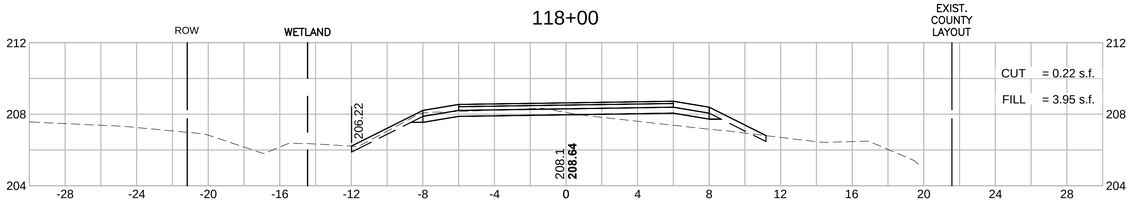

117+50

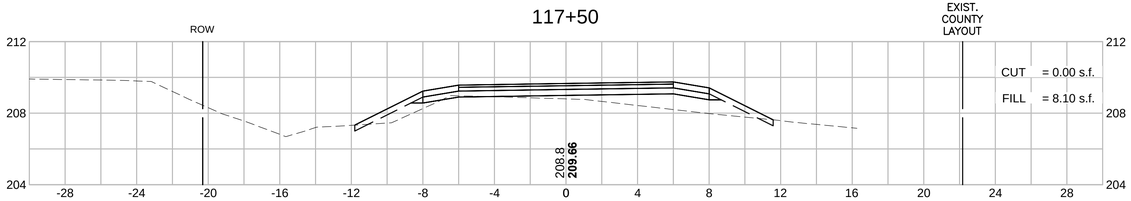

117+00

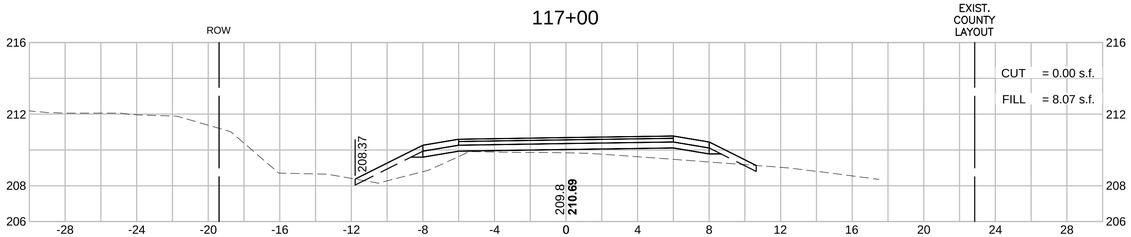

116+50

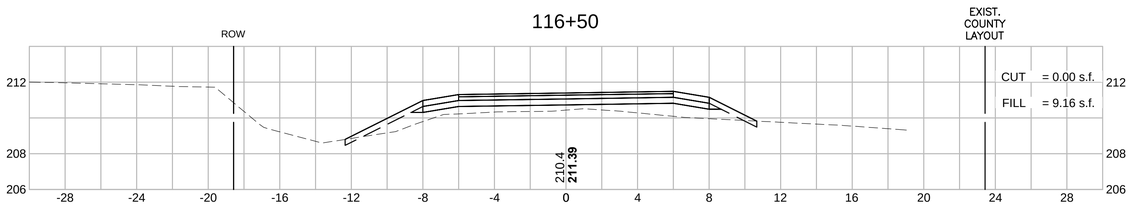

UP
+80
16' R

116+00

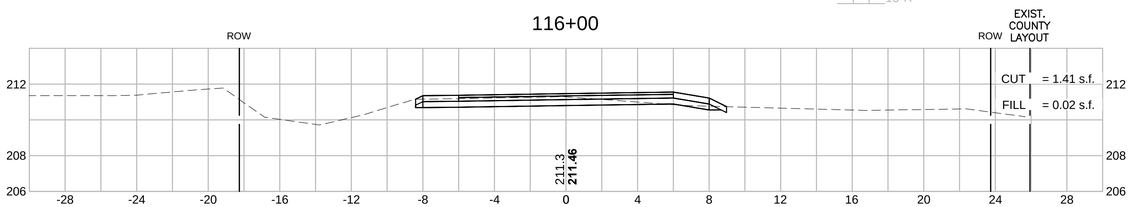

120+00

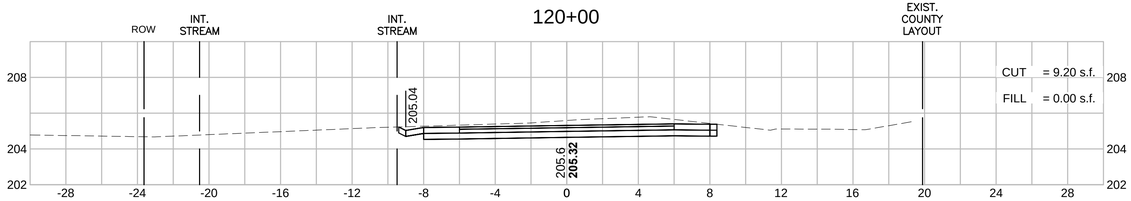

119+50

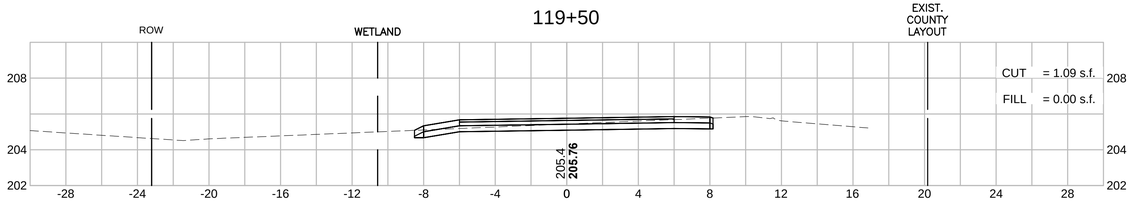

119+00

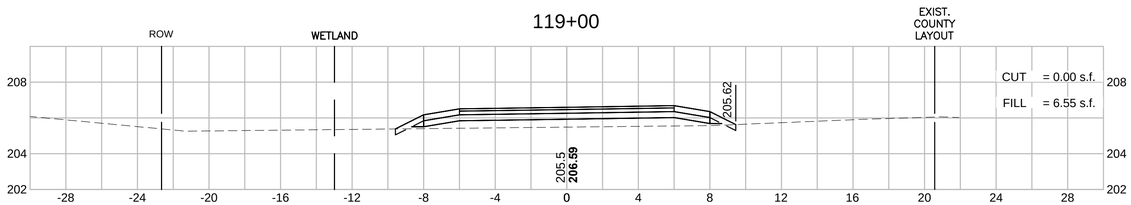

118+50

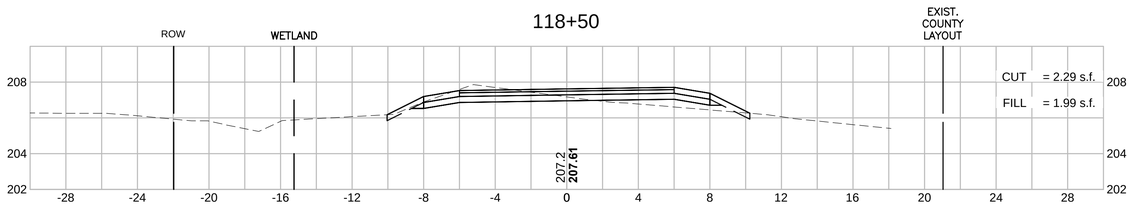

604531_HD(XS).DWG Plotted on 8-Oct-2015 2:26 PM

MAYNARD & ACTON
ASSABET RIVER RAIL TRAIL

STATE	FED. AID PROJ. NO.	SHEET NO.	TOTAL SHEETS
MA	CMAQ/STP-TE-002S(836)	199	230
PROJECT FILE NO.	604531		

CROSS SECTIONS

HOR. SCALE IN FEET
4 0 4 8
4 0 4 8
VER. SCALE IN FEET

UP
+36
20' L

113+50

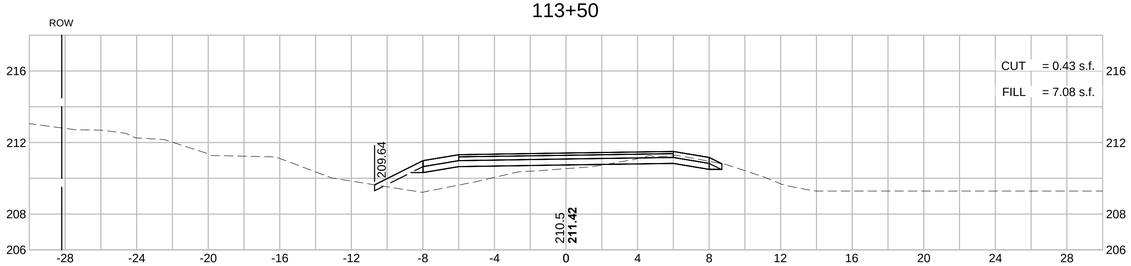

115+50

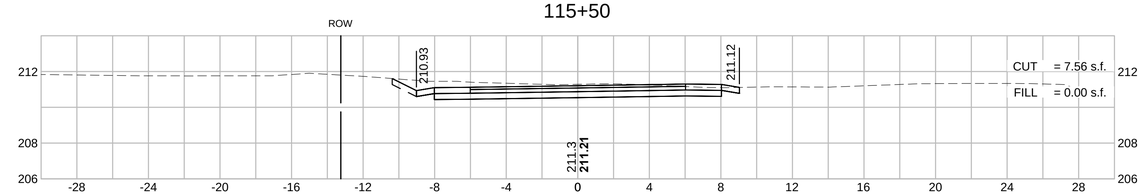

113+00

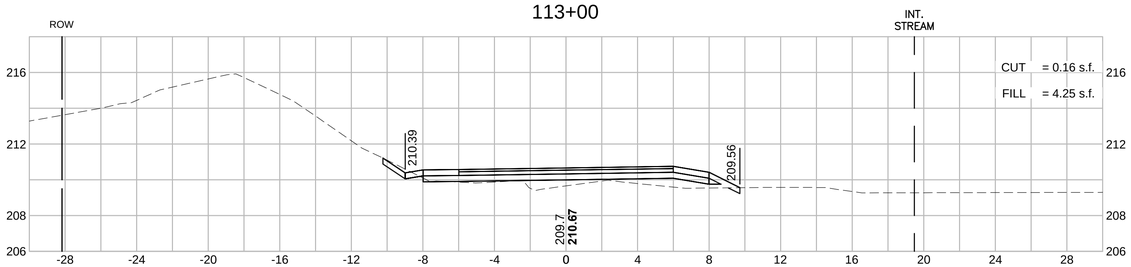

115+00

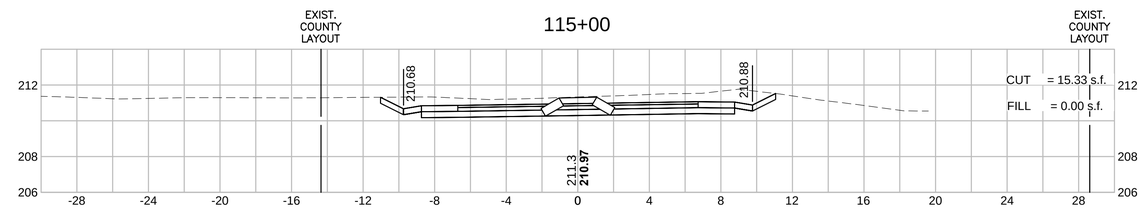

112+50

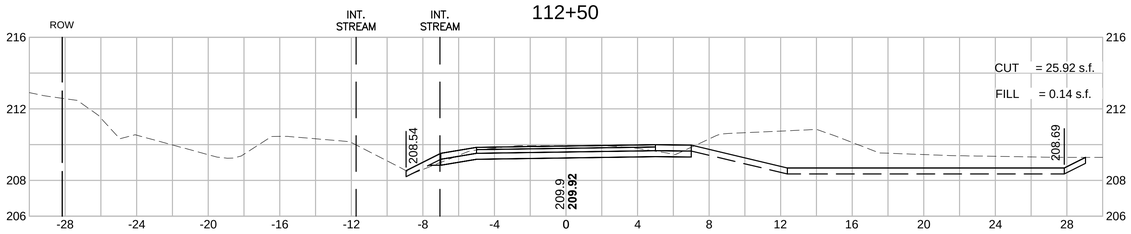

114+50

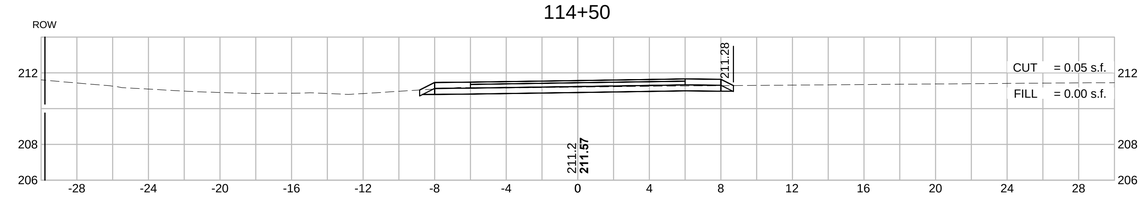

112+00

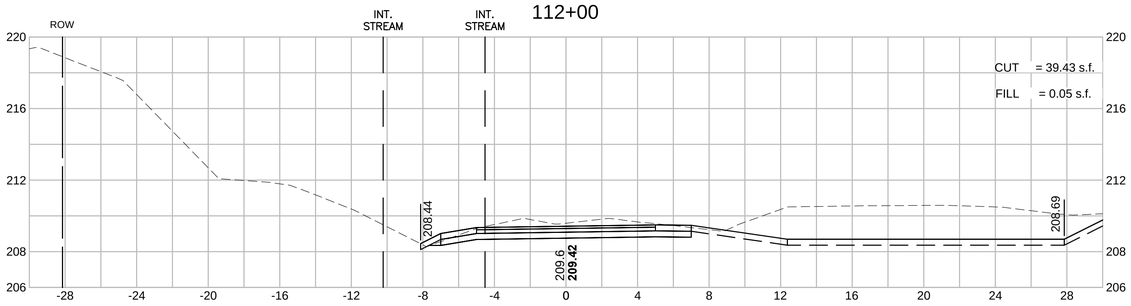

114+00

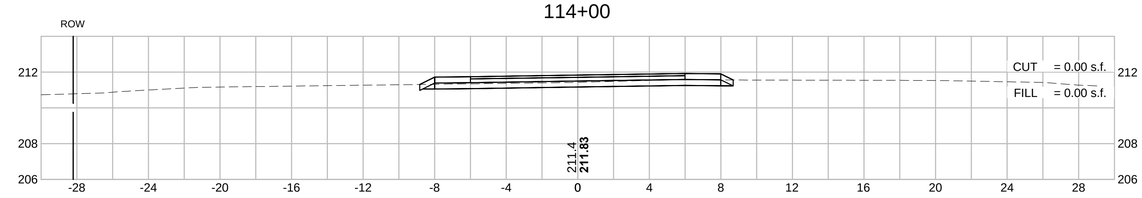

604531_HD(XS).DWG Plotted on 8-Oct-2015 2:25 PM

HOR. SCALE IN FEET
4 0 4 8
4 0 4 8
VER. SCALE IN FEET

MAYNARD & ACTON
ASSABET RIVER RAIL TRAIL

STATE	FED. AID PROJ. NO.	SHEET NO.	TOTAL SHEETS
MA	CMAQ/STP-TE-002S(836)	198	230
PROJECT FILE NO.	604531		

CROSS SECTIONS

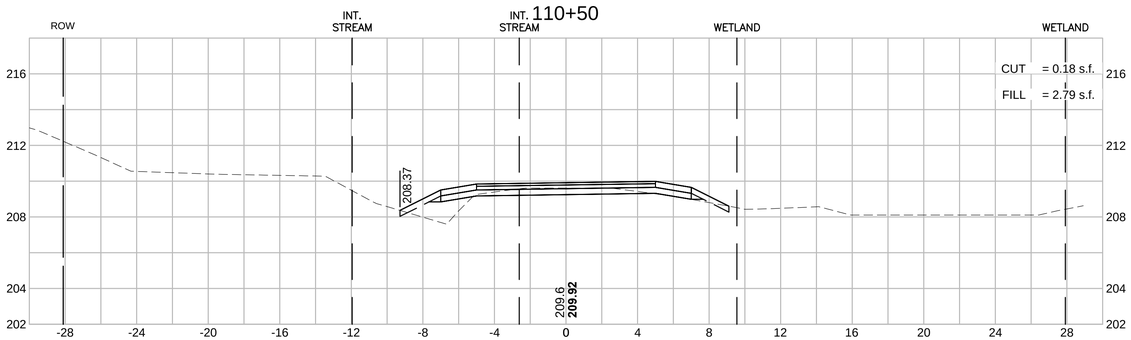

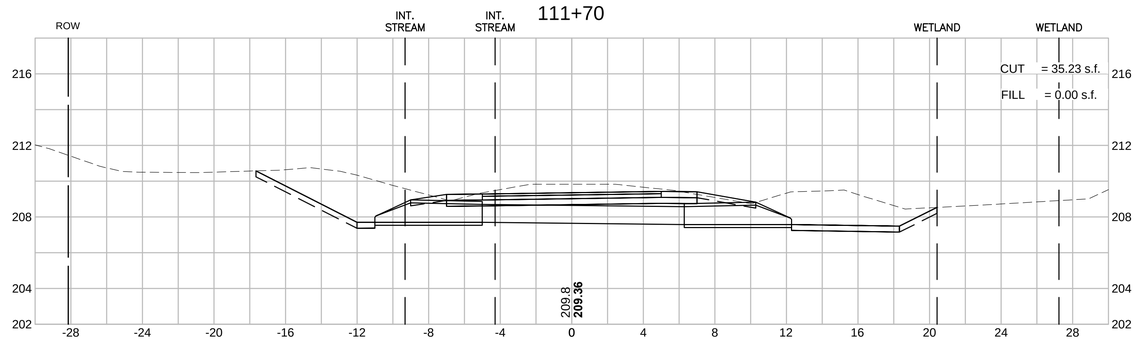

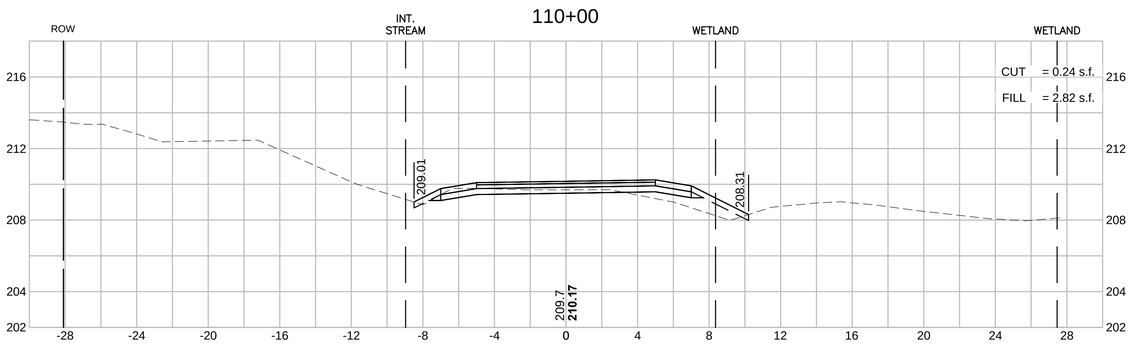

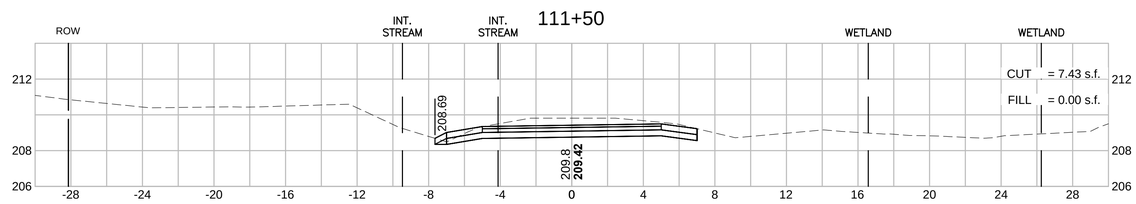

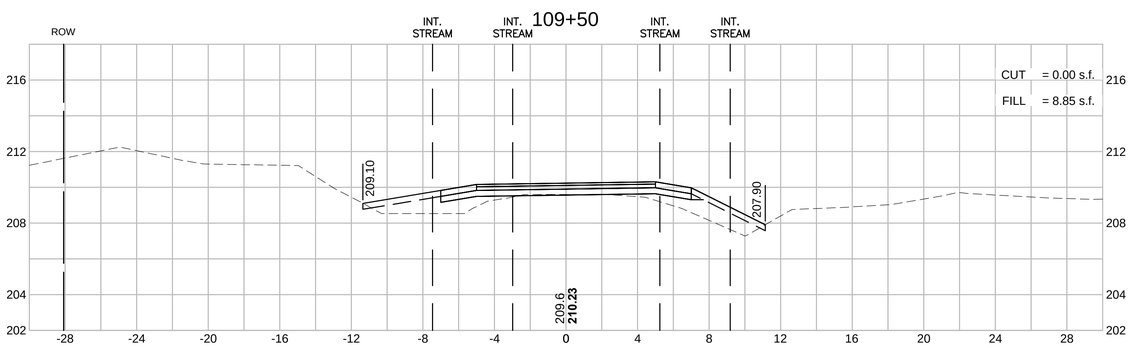

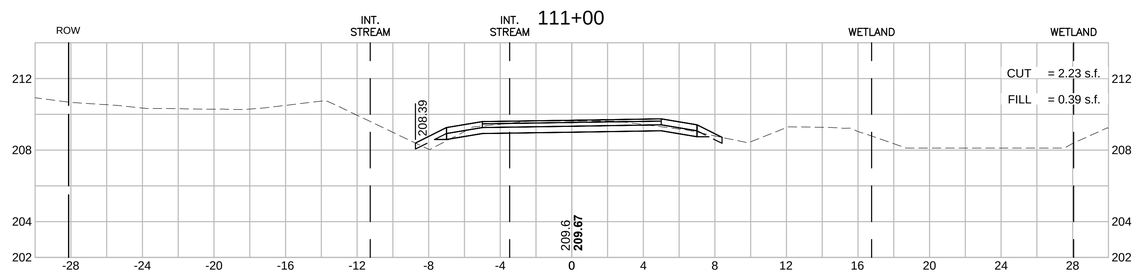

604531_HD(XS).DWG Plotted on 8-Oct-2015 2:24 PM

HOR. SCALE IN FEET
4 0 4 8
4 0 4 8
VER. SCALE IN FEET

MAYNARD & ACTON
ASSABET RIVER RAIL TRAIL

STATE	FED. AID PROJ. NO.	SHEET NO.	TOTAL SHEETS
MA	CMAQ/STP-TE-002S(836)	197	230
PROJECT FILE NO.	604531		

CROSS SECTIONS

604531_HD(XS).DWG Plotted on 8-Oct-2015 2:24 PM

107+50

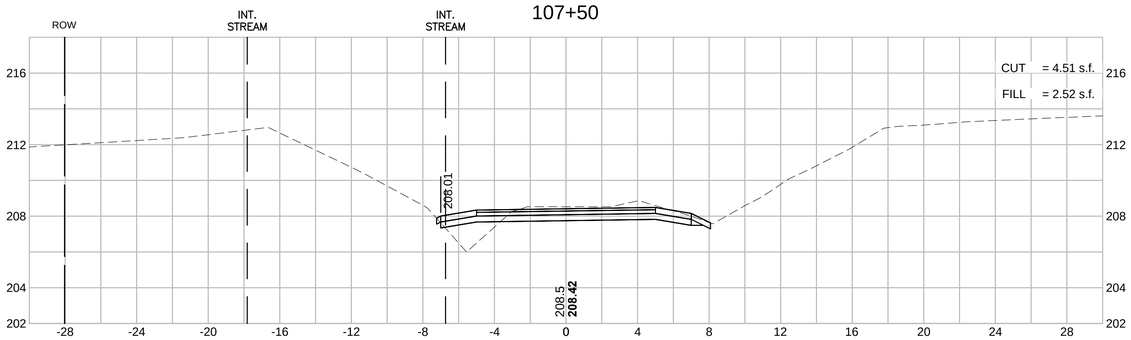

109+00

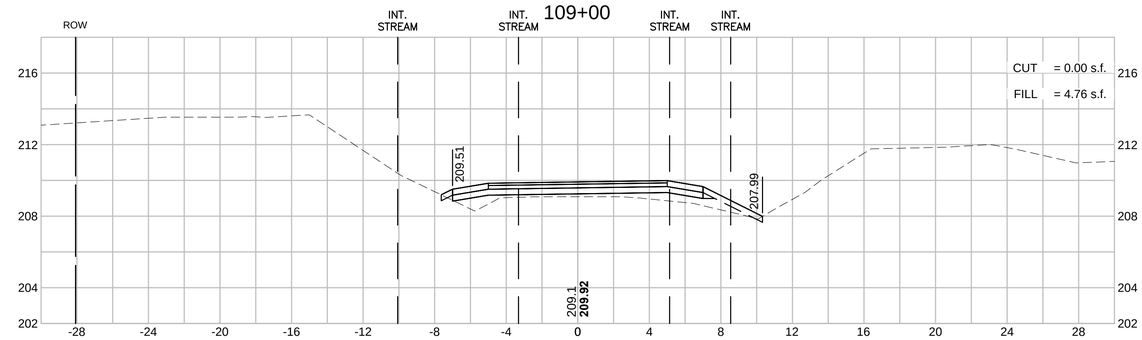

107+00

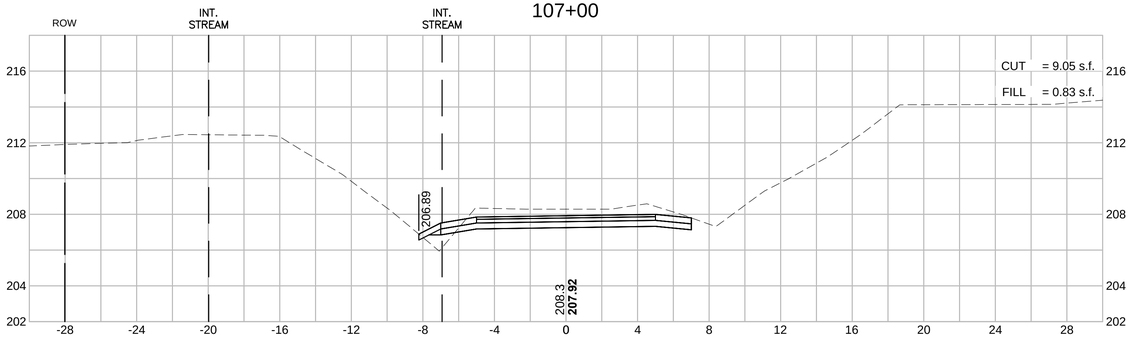

108+50

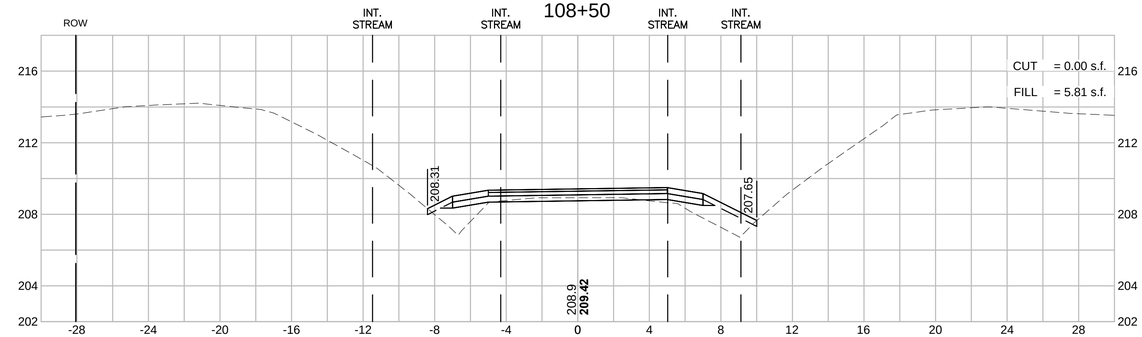

106+50

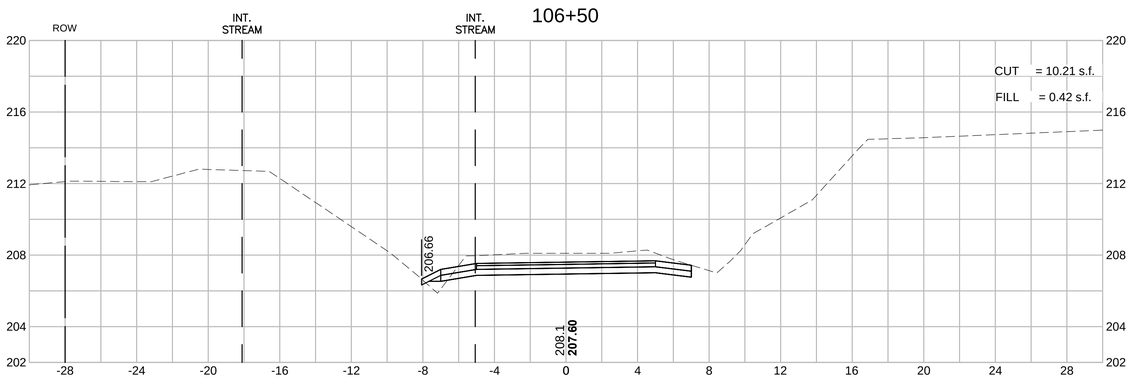

108+00

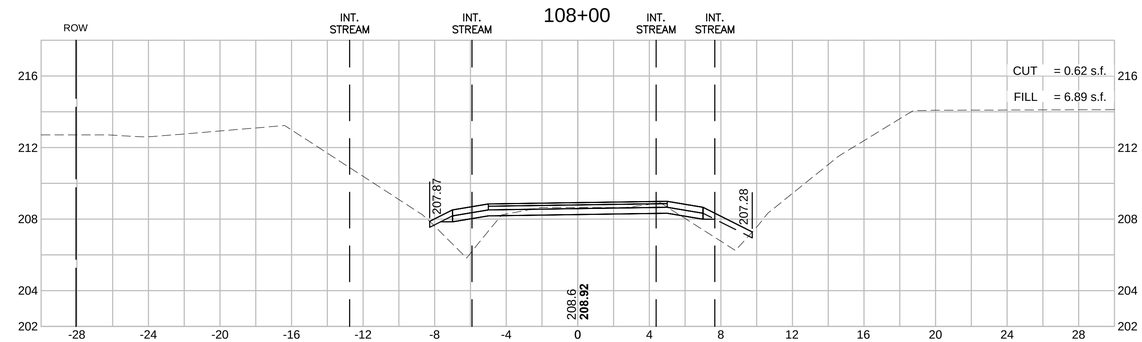

MAYNARD & ACTON
ASSABET RIVER RAIL TRAIL

STATE	FED. AID PROJ. NO.	SHEET NO.	TOTAL SHEETS
MA	CMAQ/STP-TE-002S(836)	196	230
PROJECT FILE NO.	604531		

CROSS SECTIONS

HOR. SCALE IN FEET
4 0 4 8
4 0 4 8
VER. SCALE IN FEET

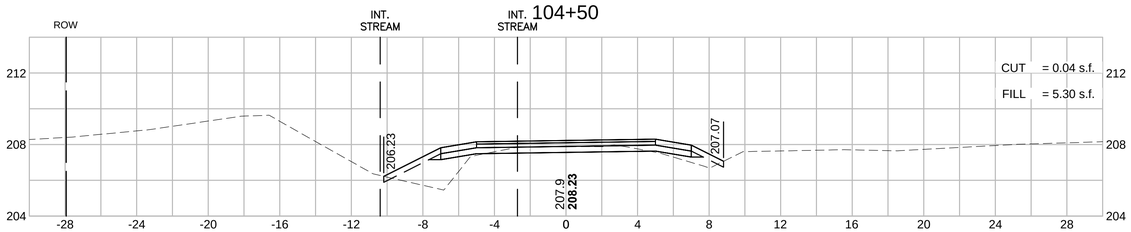

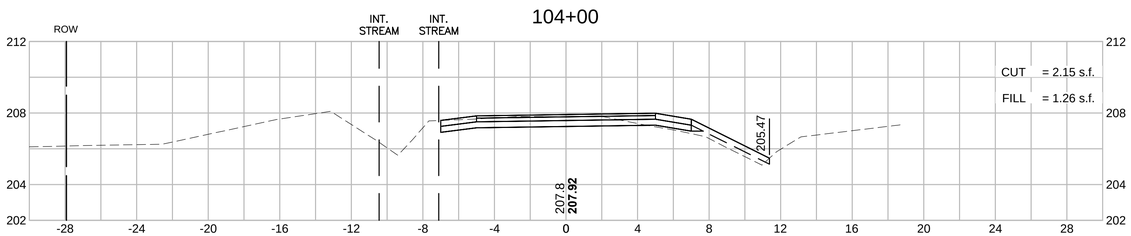

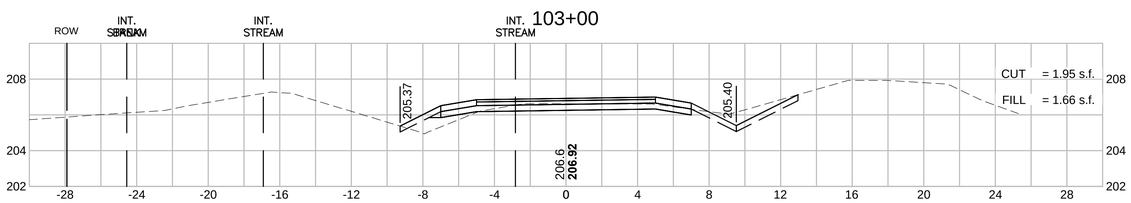

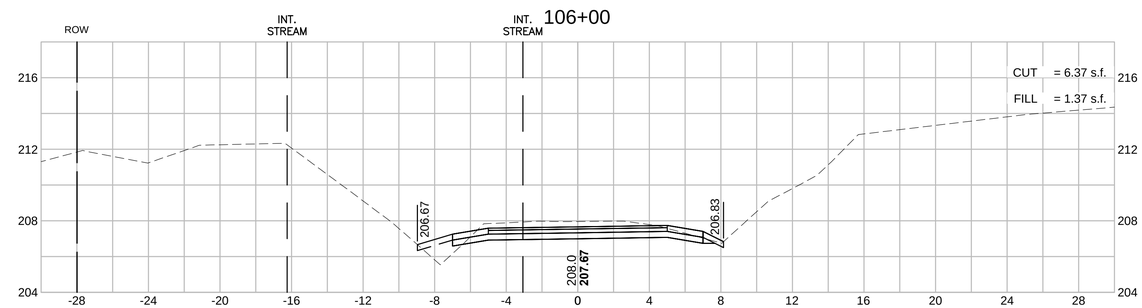

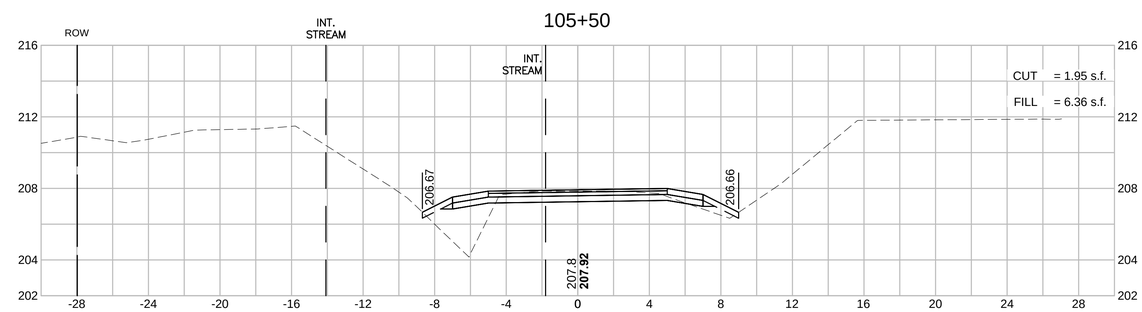

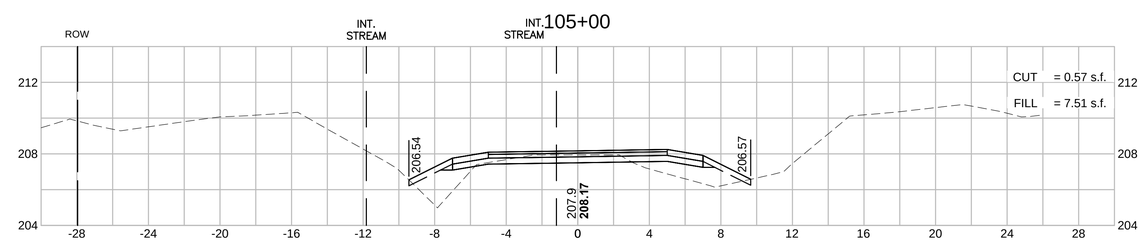

604531_HD(XS).DWG Plotted on 8-Oct-2015 2:23 PM

MAYNARD & ACTON
ASSABET RIVER RAIL TRAIL

STATE	FED. AID PROJ. NO.	SHEET NO.	TOTAL SHEETS
MA	CMAQ/STP-TE-002S(836)	195	230
PROJECT FILE NO.	604531		

CROSS SECTIONS

HOR. SCALE IN FEET
4 0 4 8
4 0 4 8
VER. SCALE IN FEET

100+80

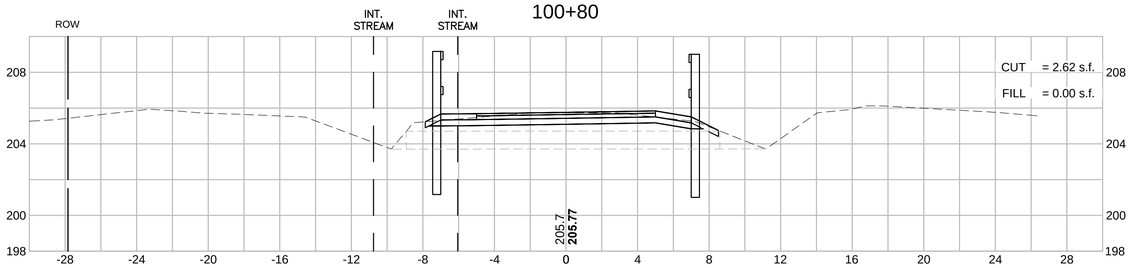

102+50

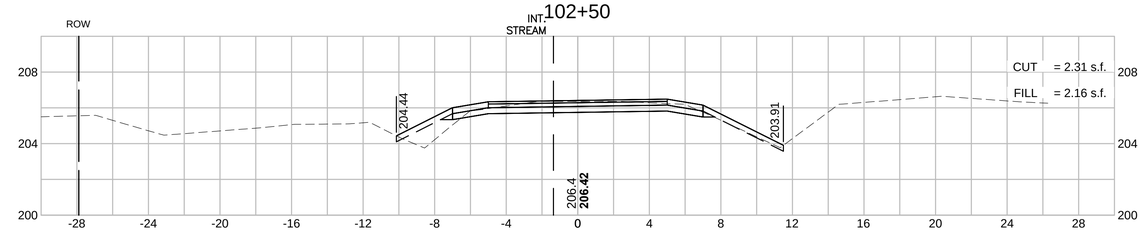

100+50

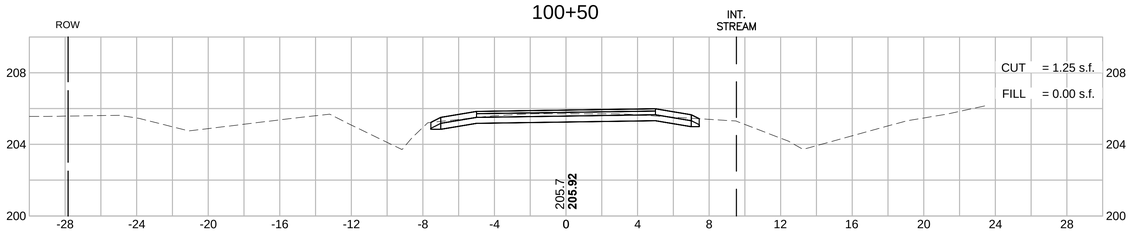

102+00

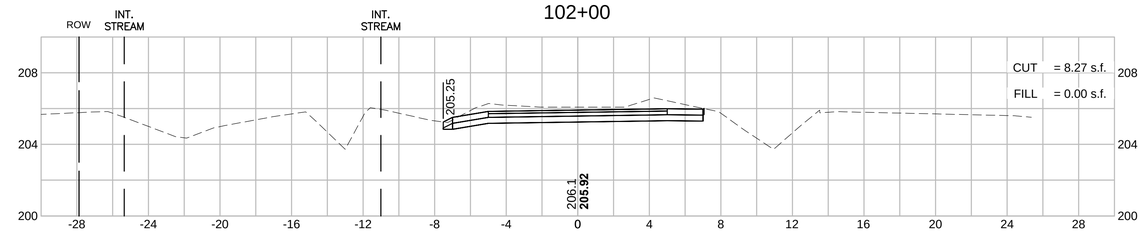

100+00

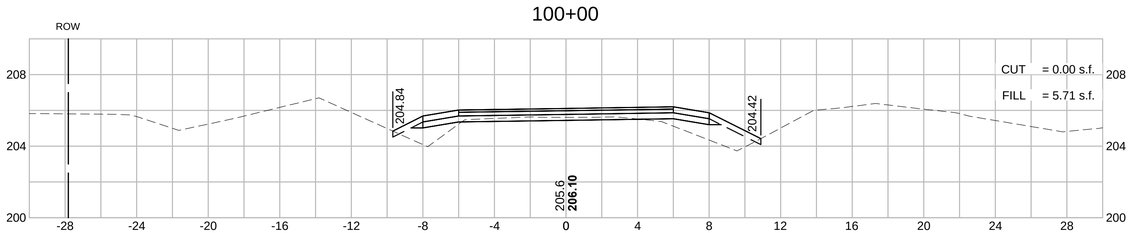

101+50

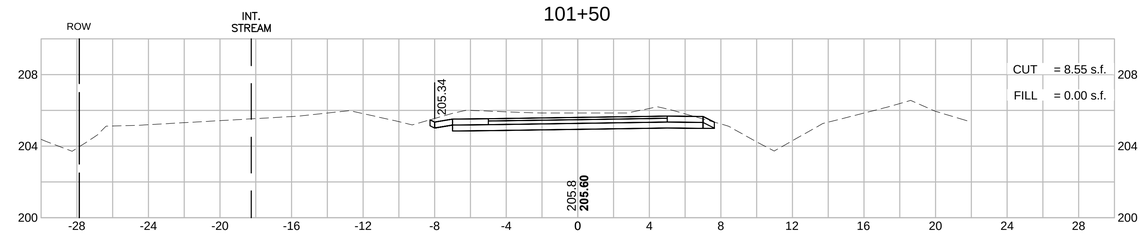

99+50

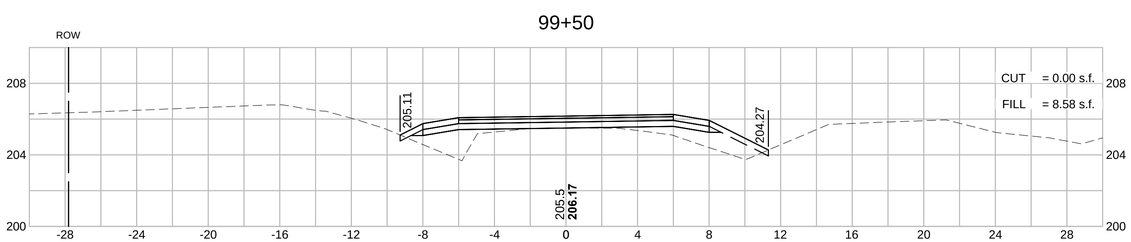

101+00

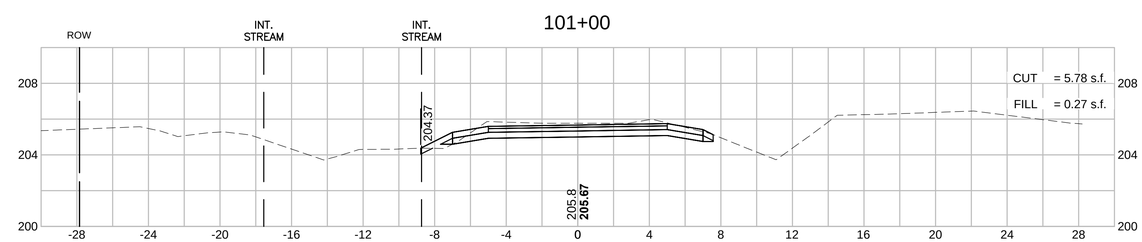

604531_HD(XS).DWG Plotted on 8-Oct-2015 2:23 PM

MAYNARD & ACTON
ASSABET RIVER RAIL TRAIL

HOR. SCALE IN FEET
4 0 4 8
4 0 4 8
VER. SCALE IN FEET

STATE	FED. AID PROJ. NO.	SHEET NO.	TOTAL SHEETS
MA	CMAQ/STP-TE-002S(836)	194	230
PROJECT FILE NO.	604531		

CROSS SECTIONS

97+15

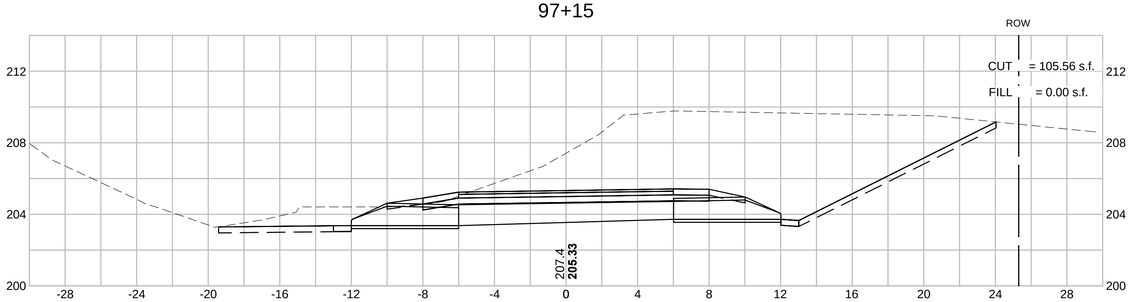

99+00

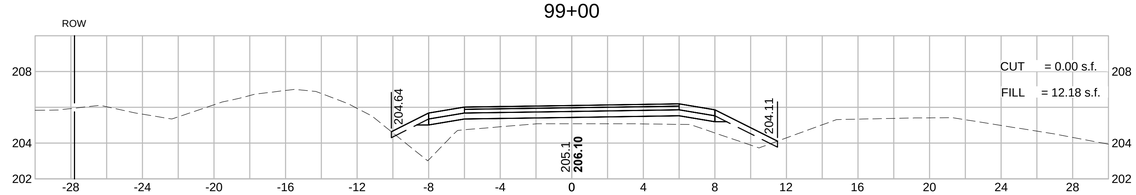

97+00

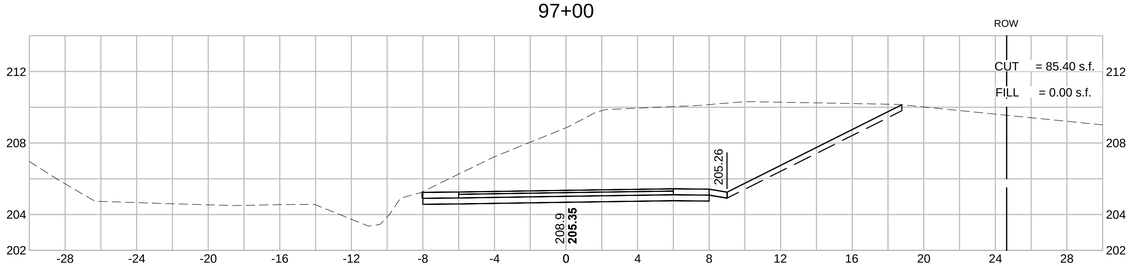

98+50

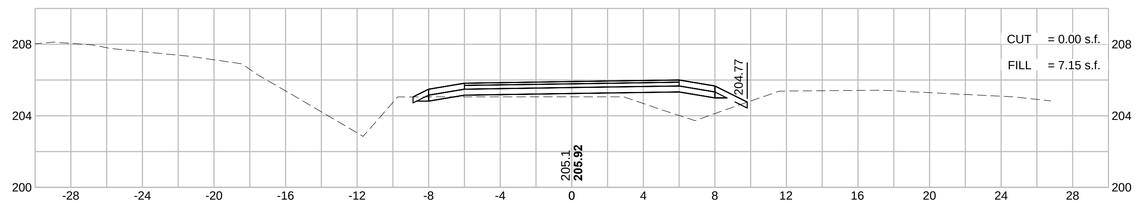

96+50

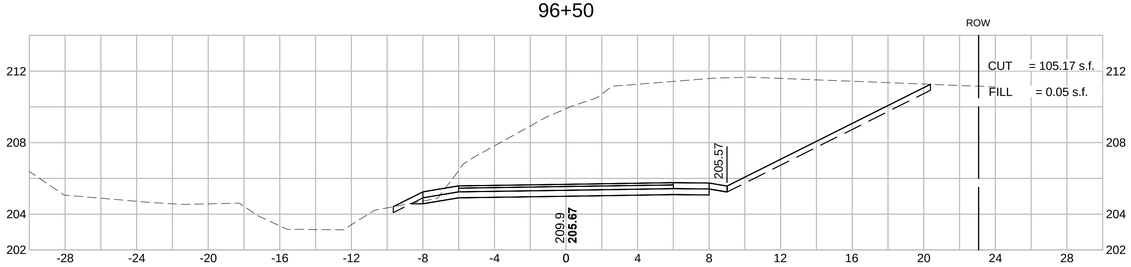

98+00

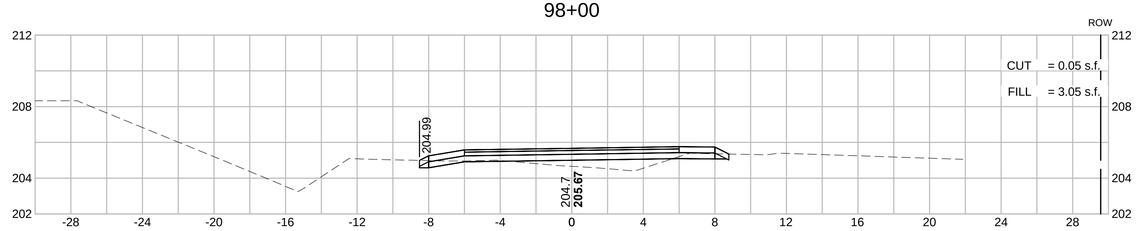

96+00

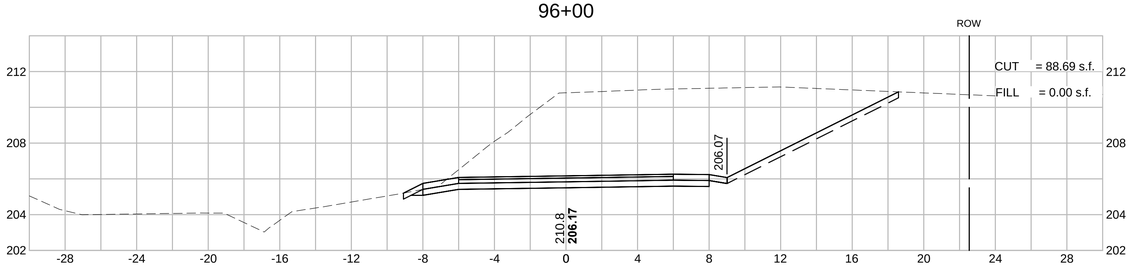

97+50

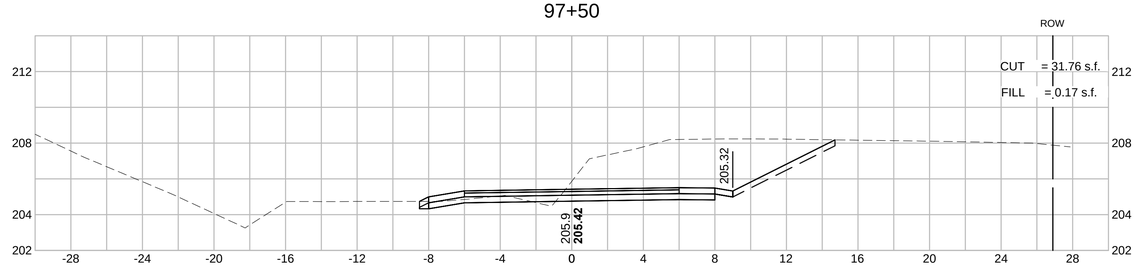

604531_HD(XS).DWG Plotted on 8-Oct-2015 2:22 PM

MAYNARD & ACTON
ASSABET RIVER RAIL TRAIL

HOR. SCALE IN FEET
4 0 4 8
4 0 4 8
VER. SCALE IN FEET

STATE	FED. AID PROJ. NO.	SHEET NO.	TOTAL SHEETS
MA	CMAQ/STP-TE-002S(836)	193	230
PROJECT FILE NO.	604531		

CROSS SECTIONS

94+00

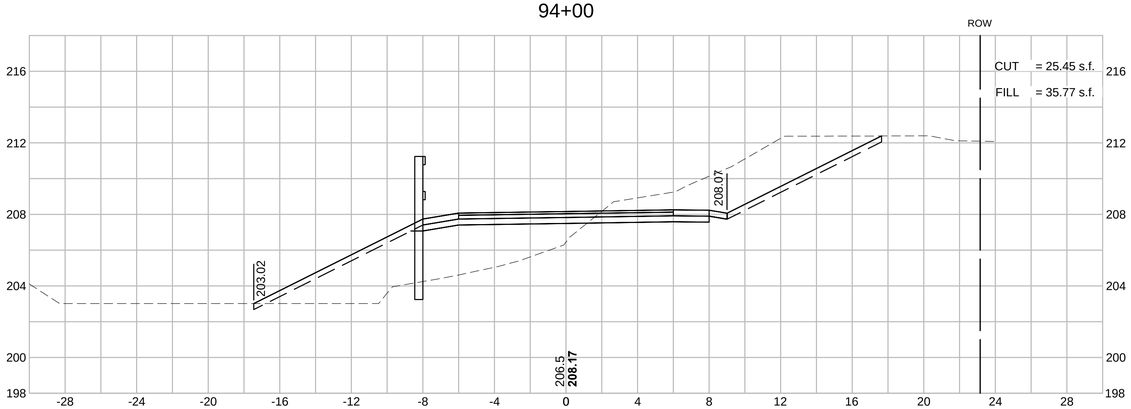

95+50

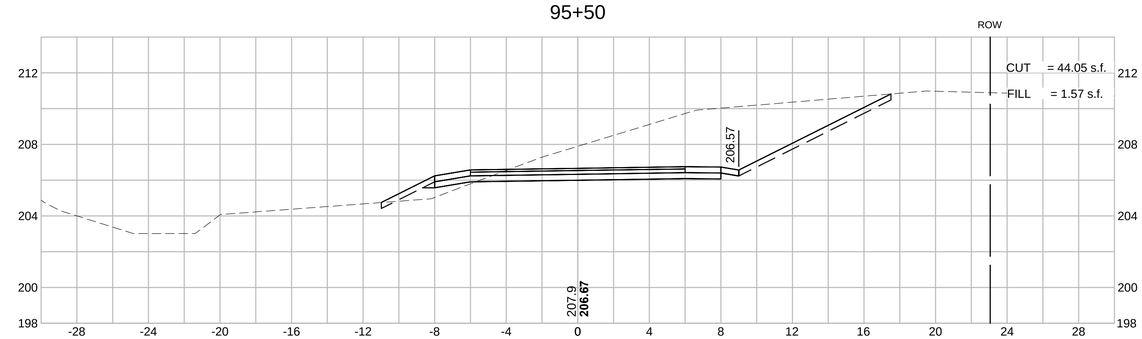

93+50

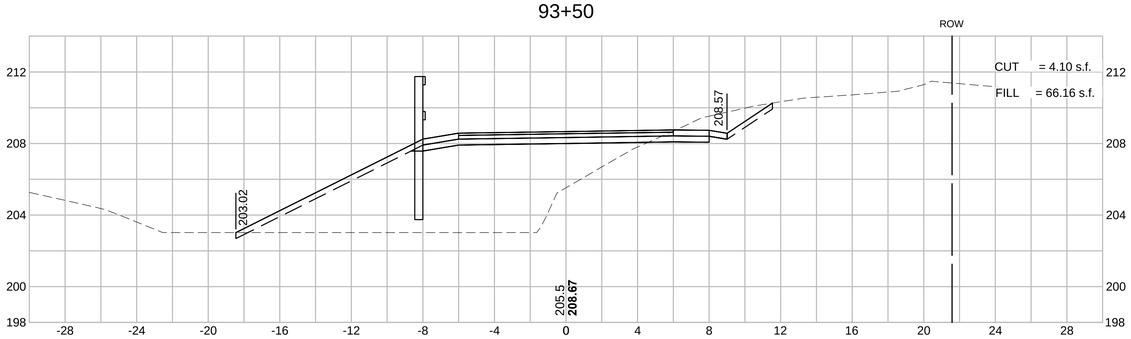

95+00

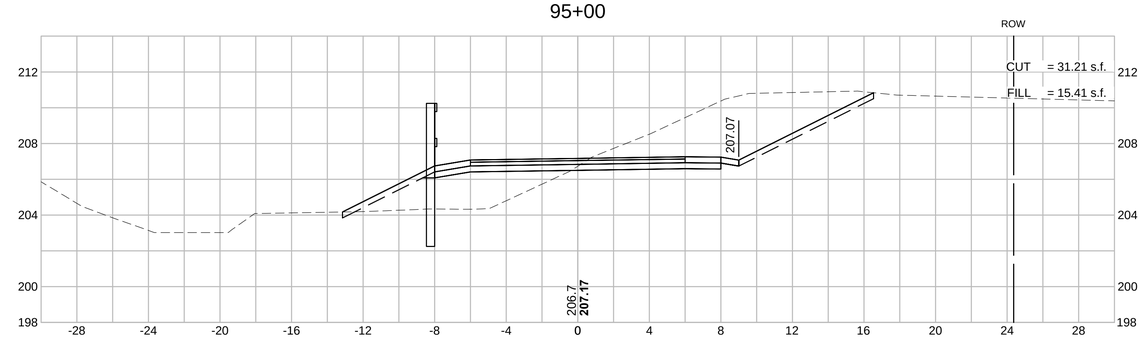

93+00

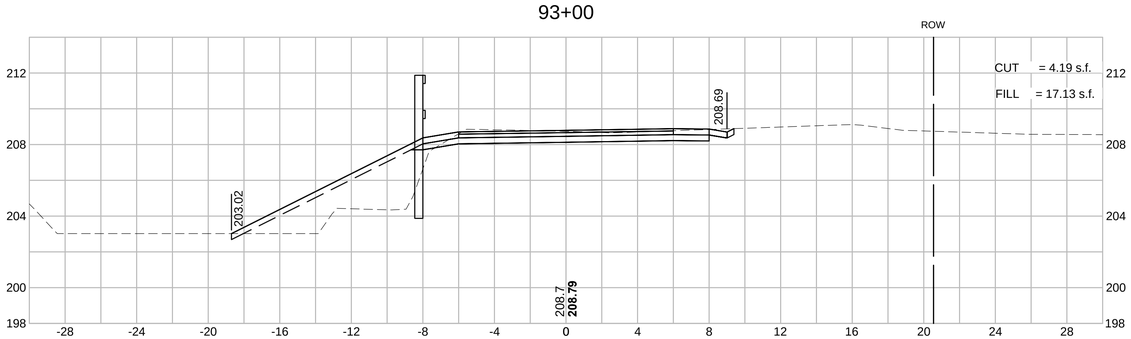

94+50

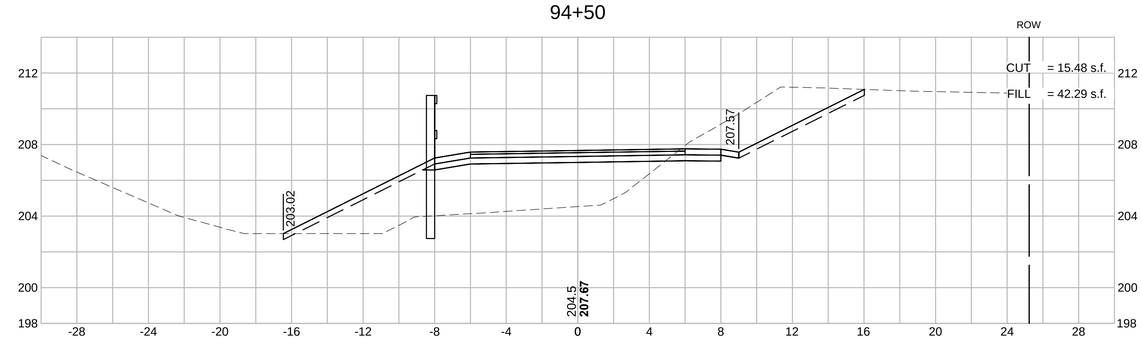

604531_HD(XS).DWG Plotted on 8-Oct-2015 2:21 PM

HOR. SCALE IN FEET
4 0 4 8
4 0 4 8
VER. SCALE IN FEET

MAYNARD & ACTON
ASSABET RIVER RAIL TRAIL

STATE	FED. AID PROJ. NO.	SHEET NO.	TOTAL SHEETS
MA	CMAQ/STP-TE-002S(836)	192	230
PROJECT FILE NO.	604531		

CROSS SECTIONS

604531_HD(XS).DWG Plotted on 8-Oct-2015 2:21 PM

92+50

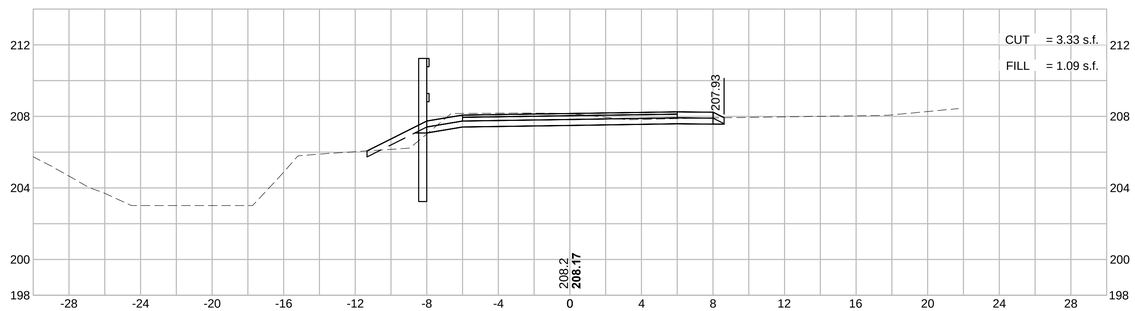

92+00

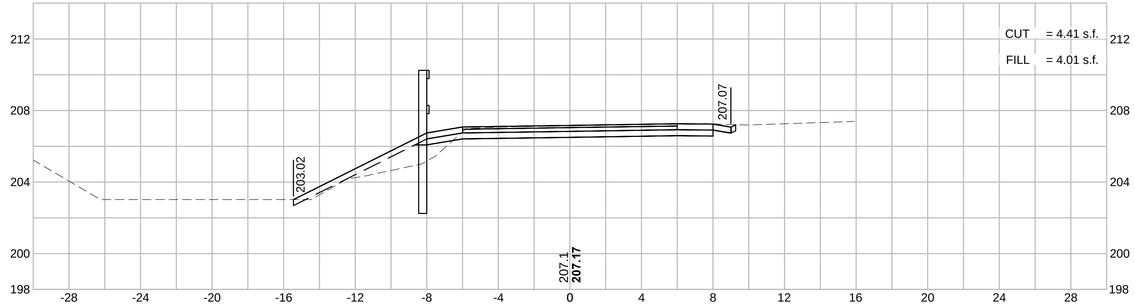

91+50

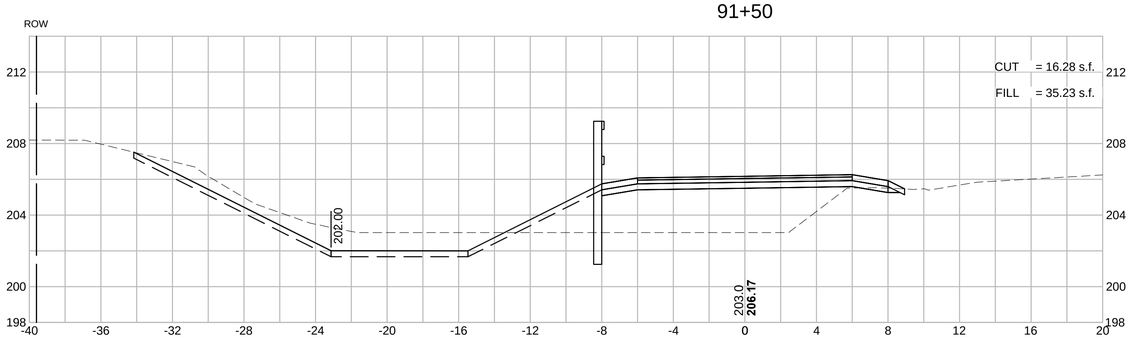

HOR. SCALE IN FEET
4 0 4 8
4 0 4 8
VER. SCALE IN FEET

MAYNARD & ACTON
ASSABET RIVER RAIL TRAIL

STATE	FED. AID PROJ. NO.	SHEET NO.	TOTAL SHEETS
MA	CMAQ/STP-TE-002S(836)	191	230
PROJECT FILE NO.	604531		

CROSS SECTIONS

91+00

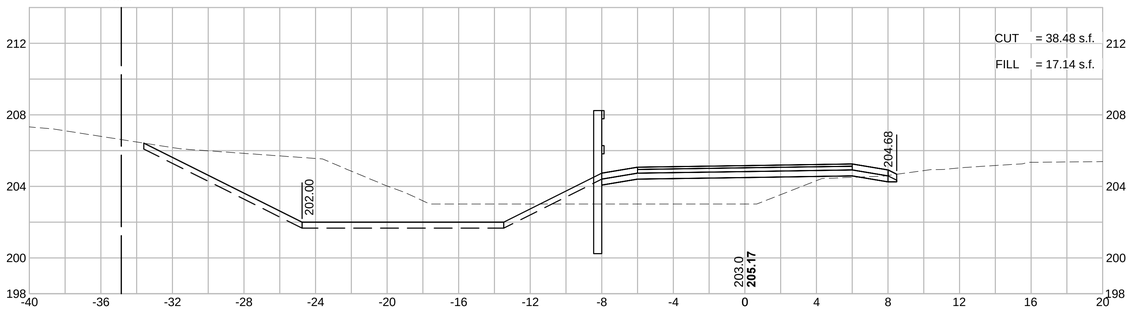

90+50

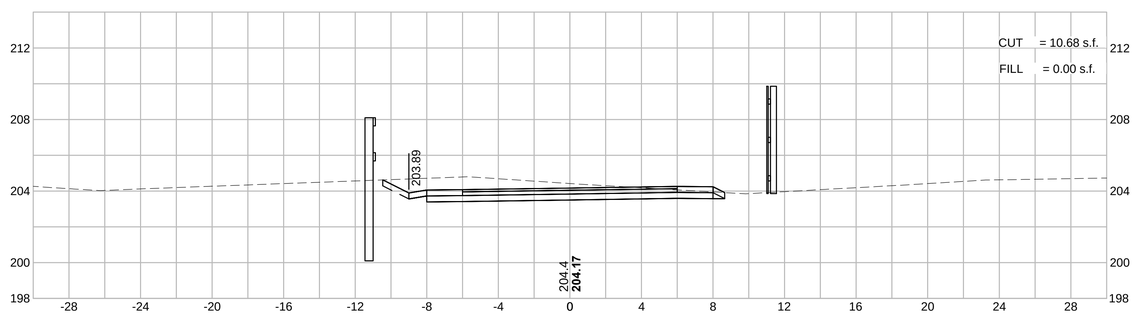

90+00

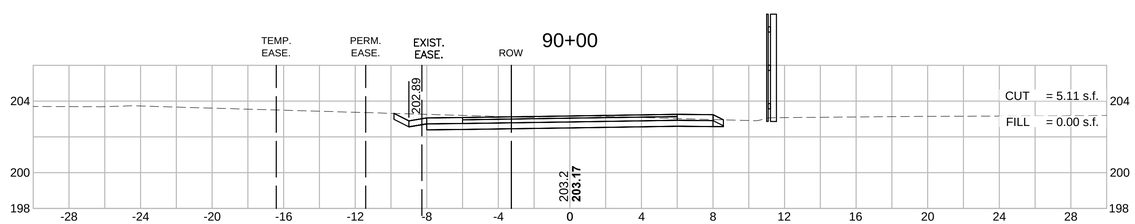

604531_HD(XS).DWG Plotted on 8-Oct-2015 2:20 PM

MAYNARD & ACTON
ASSABET RIVER RAIL TRAIL

STATE	FED. AID PROJ. NO.	SHEET NO.	TOTAL SHEETS
MA	CMAQ/STP-TE-002S(836)	190	230
PROJECT FILE NO.	604531		

CROSS SECTIONS

HOR. SCALE IN FEET
4 0 4 8
4 0 4 8
VER. SCALE IN FEET

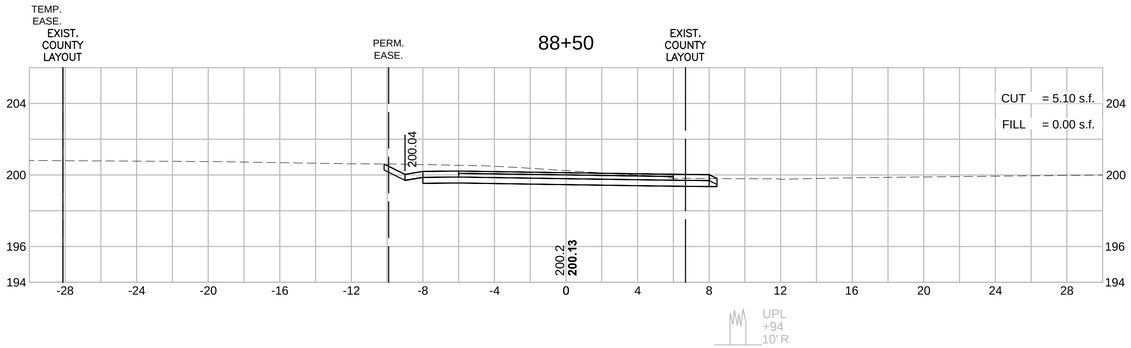

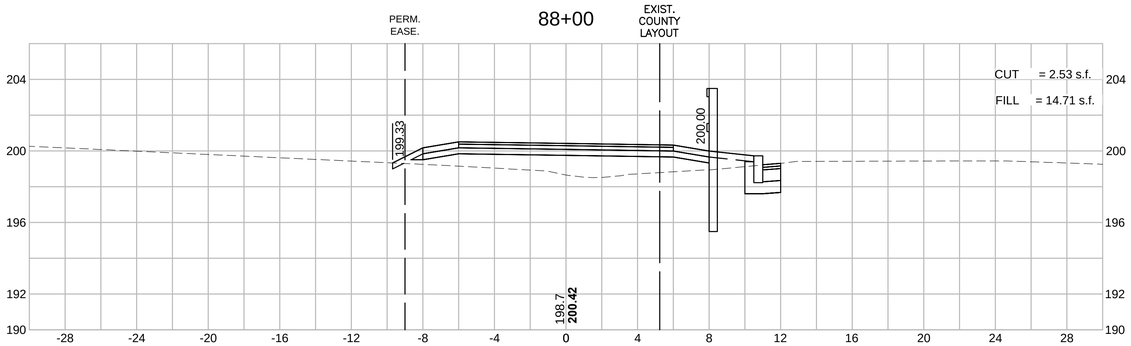

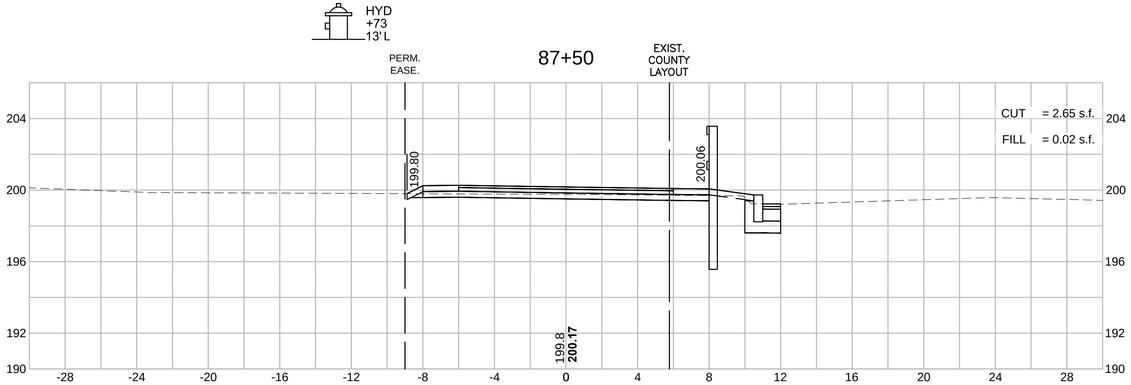

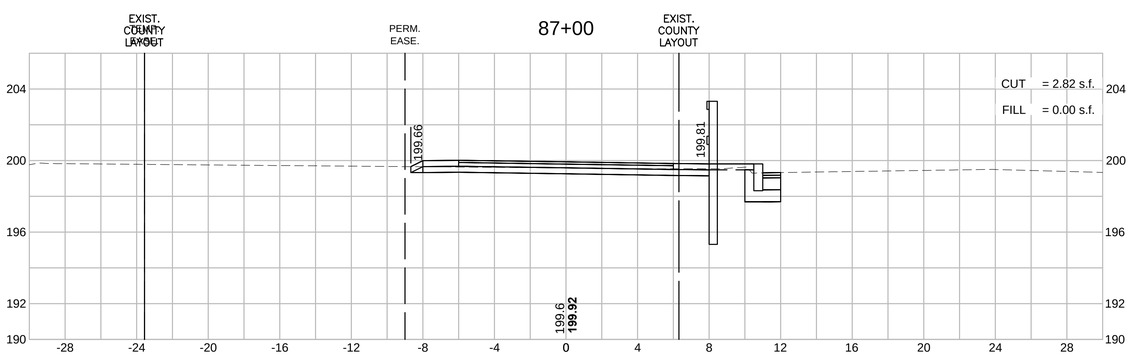

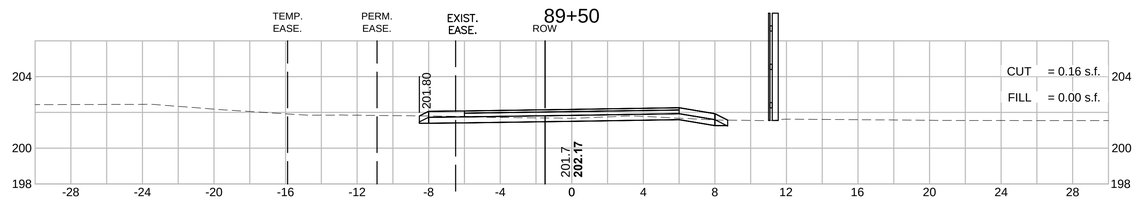

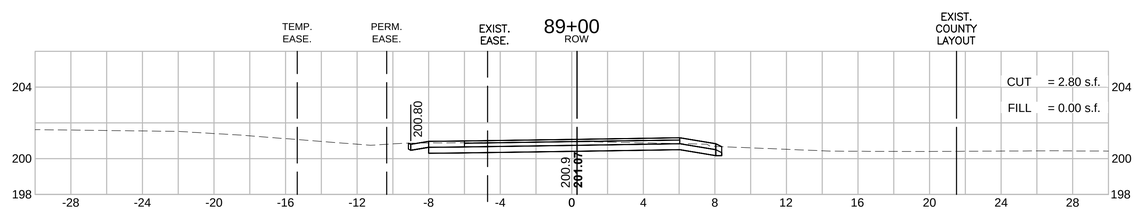

604531_HD(XS).DWG Plotted on 8-Oct-2015 2:19 PM

MAYNARD & ACTON
ASSABET RIVER RAIL TRAIL

STATE	FED. AID PROJ. NO.	SHEET NO.	TOTAL SHEETS
MA	CMAQ/STP-TE-002S(836)	189	230
PROJECT FILE NO.	604531		

HOR. SCALE IN FEET
4 0 4 8
4 0 4 8
VER. SCALE IN FEET

CROSS SECTIONS

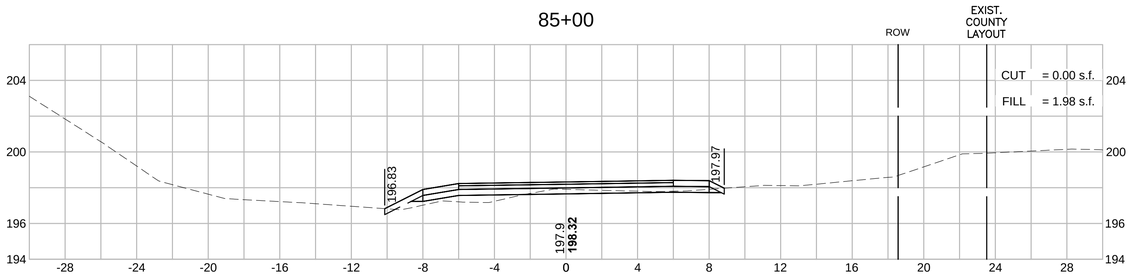

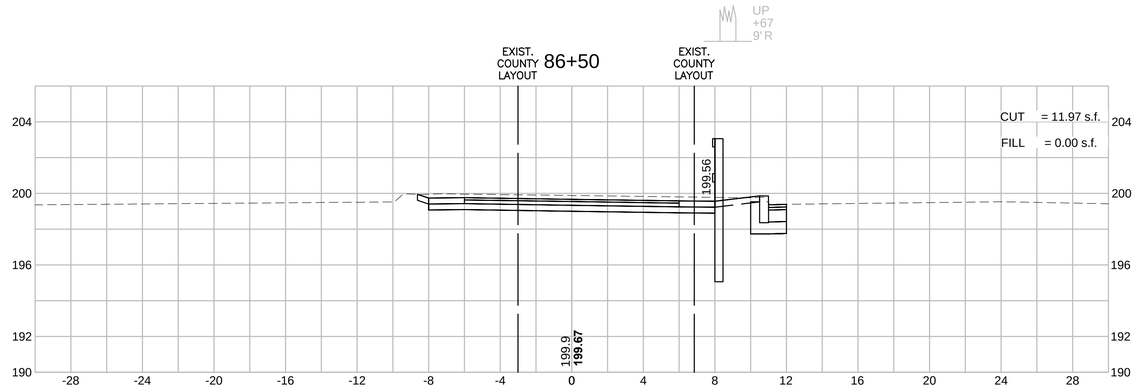

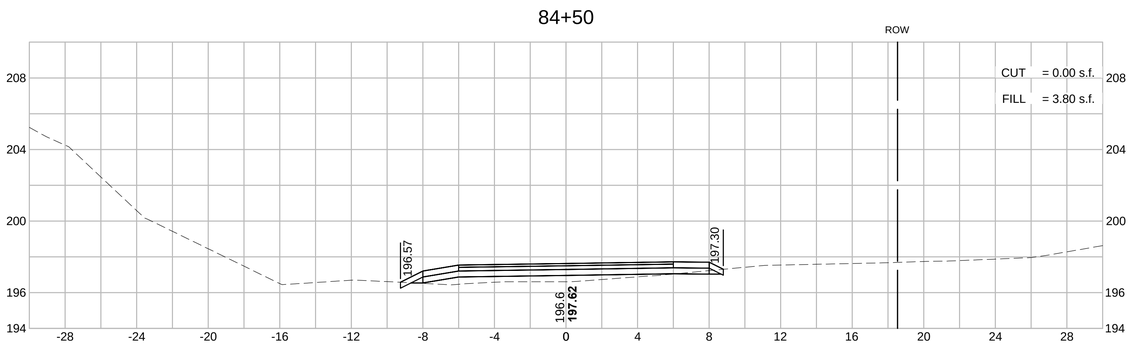

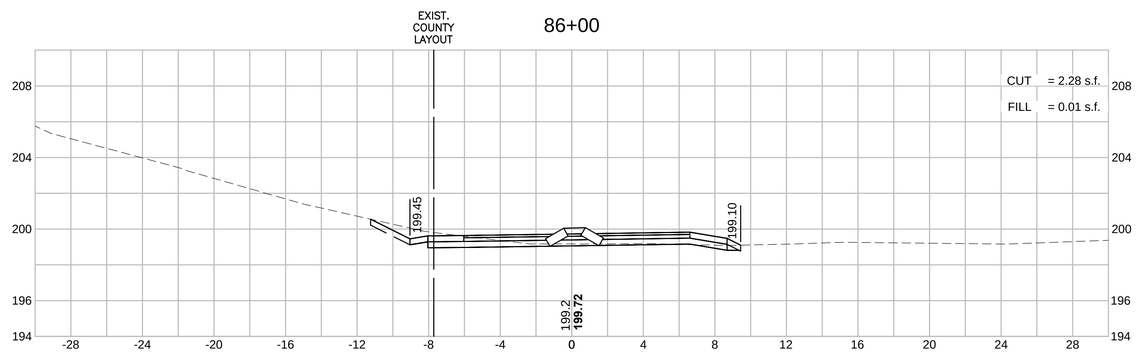

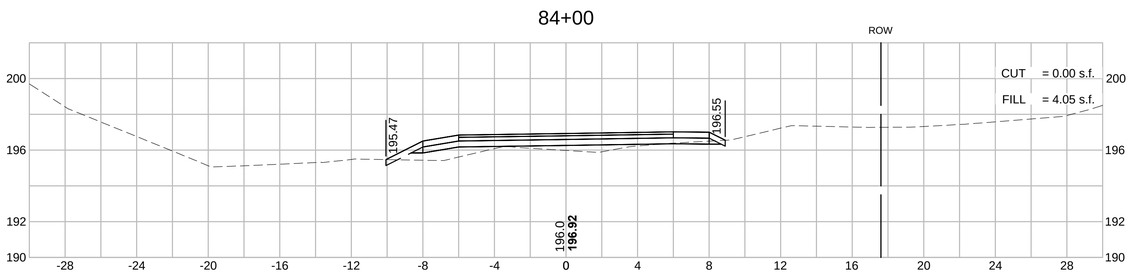

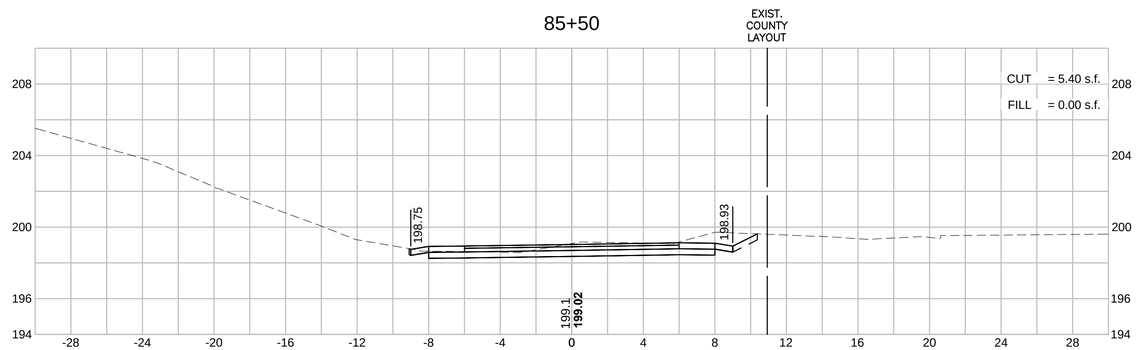

604531_HD(XS).DWG Plotted on 8-Oct-2015 2:19 PM

HOR. SCALE IN FEET
4 0 4 8
4 0 4 8
VER. SCALE IN FEET

MAYNARD & ACTON
ASSABET RIVER RAIL TRAIL

STATE	FED. AID PROJ. NO.	SHEET NO.	TOTAL SHEETS
MA	CMAQ/STP-TE-002S(836)	188	230
PROJECT FILE NO.	604531		

CROSS SECTIONS

604531_HD(XS).DWG Plotted on 8-Oct-2015 2:18 PM

82+00

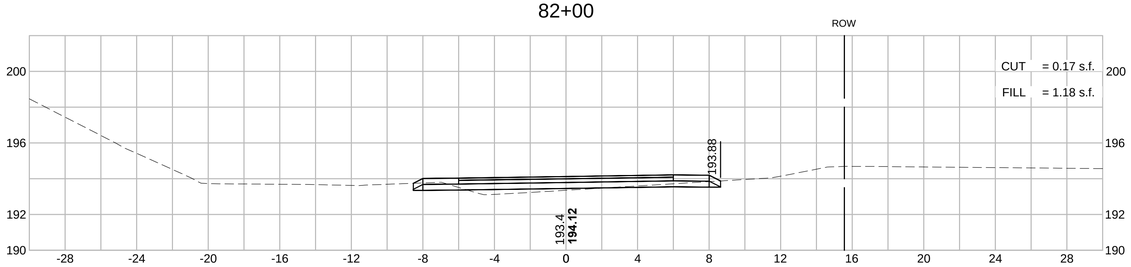

83+50

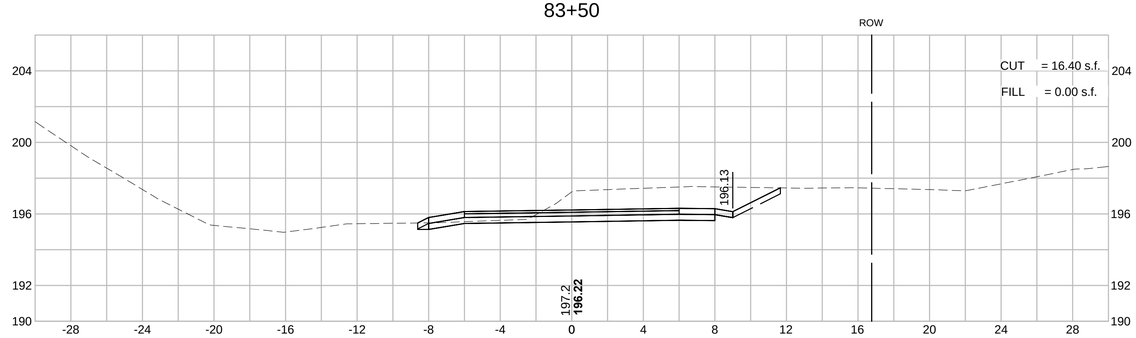

81+50

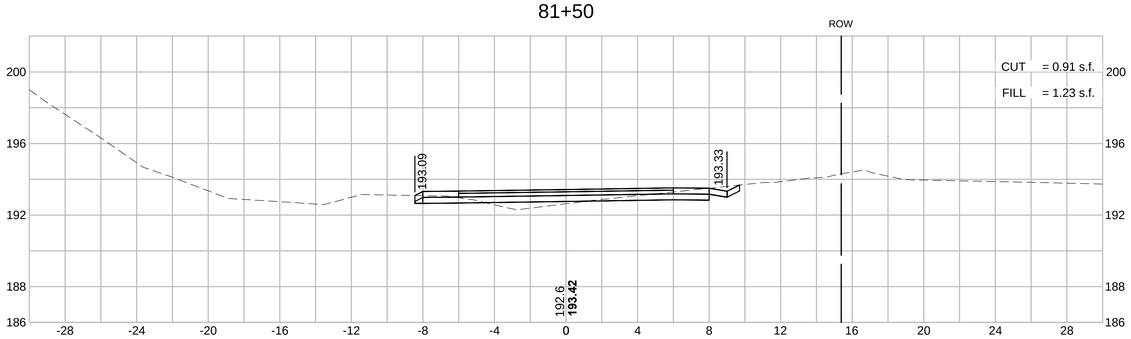

83+00

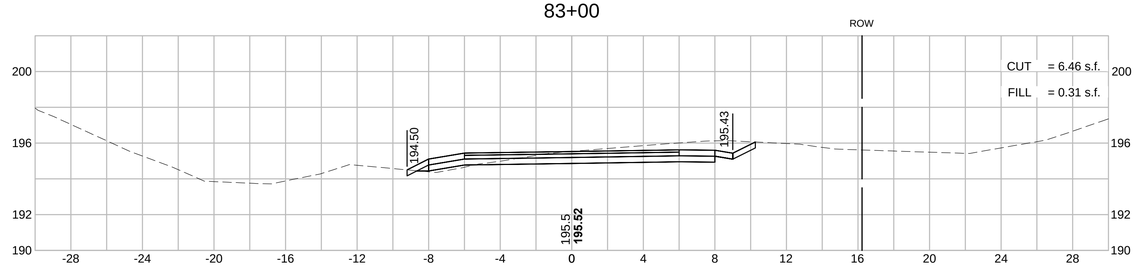

81+00

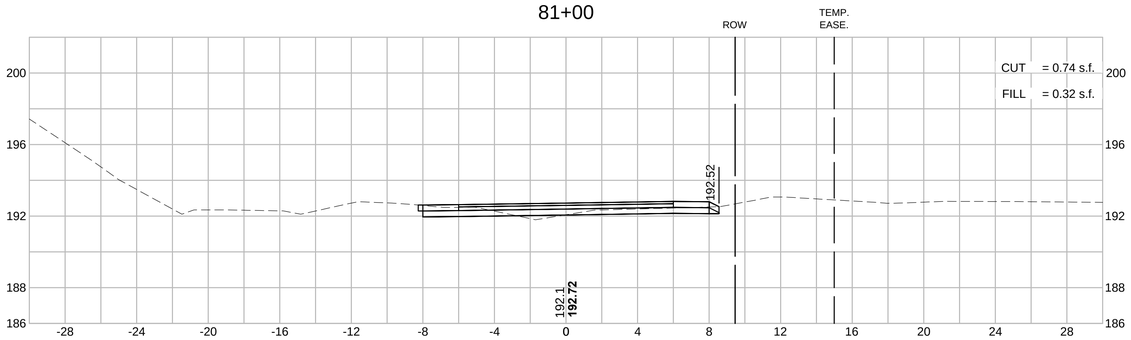

82+50

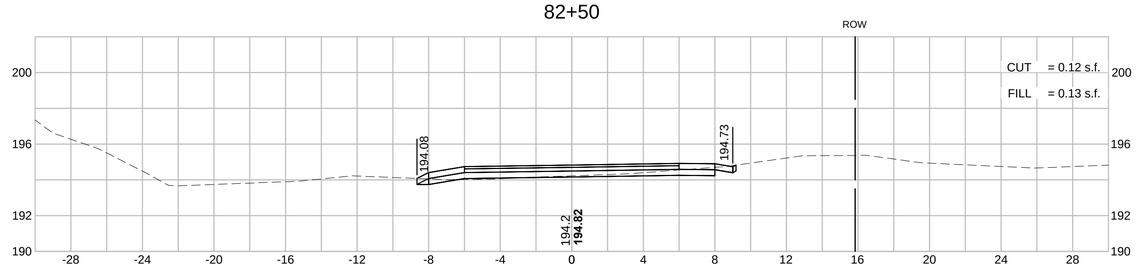

MAYNARD & ACTON
ASSABET RIVER RAIL TRAIL

HOR. SCALE IN FEET
4 0 4 8
4 0 4 8
VER. SCALE IN FEET

STATE	FED. AID PROJ. NO.	SHEET NO.	TOTAL SHEETS
MA	CMAQ/STP-TE-002S(836)	187	230
PROJECT FILE NO.	604531		

CROSS SECTIONS

79+00

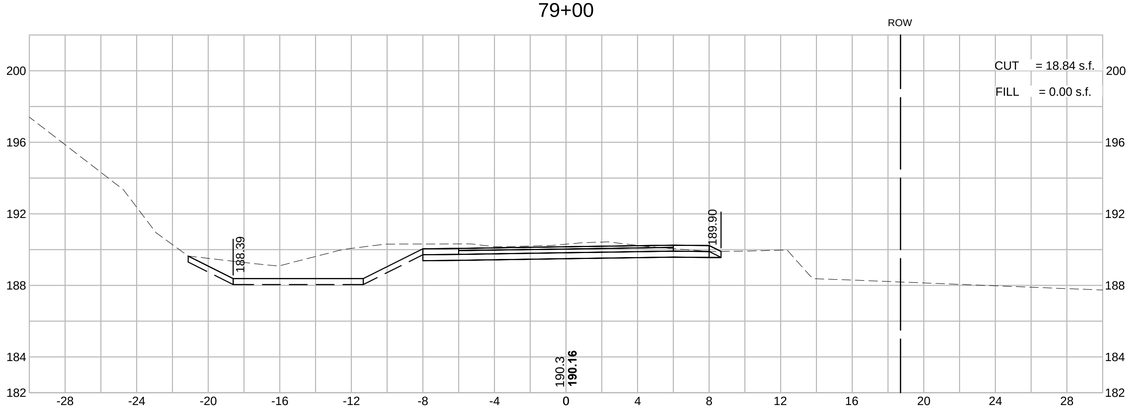

80+50

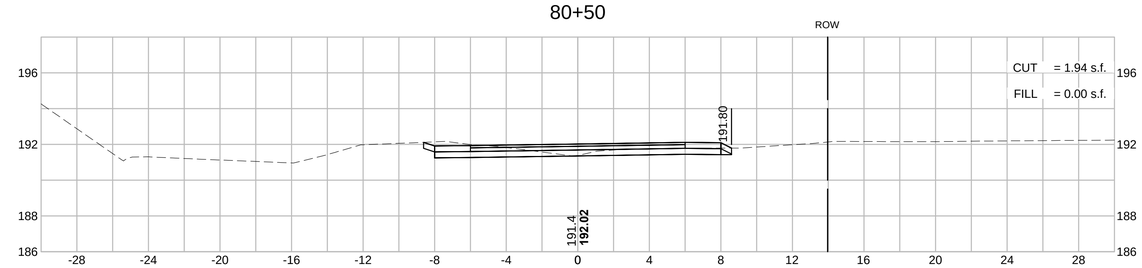

78+50

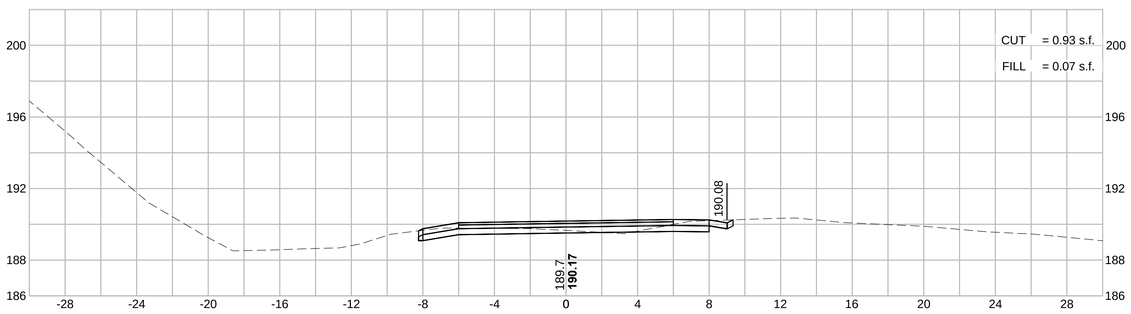

80+00

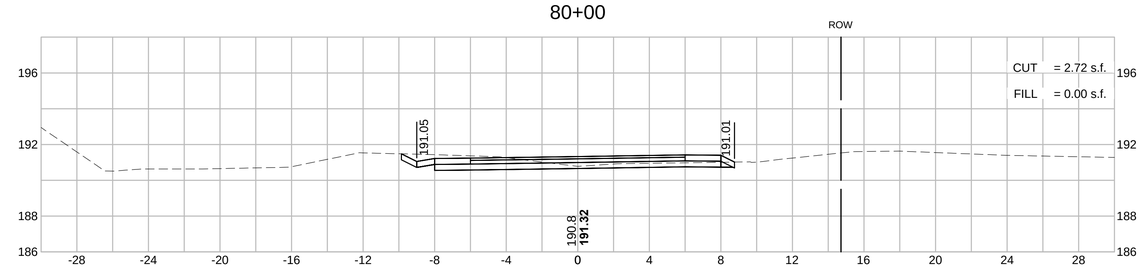

78+00

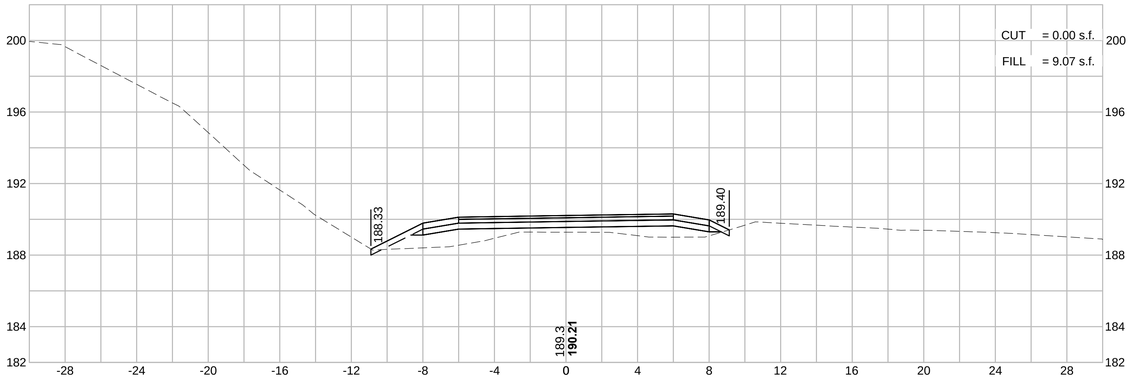

79+50

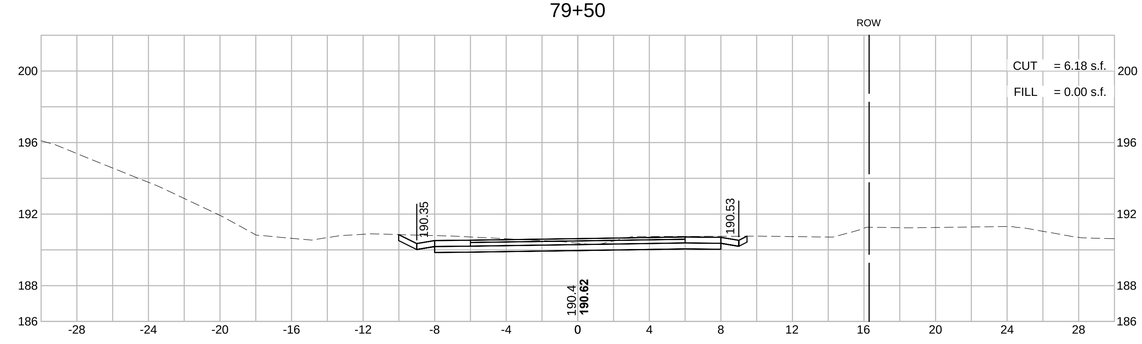

604531_HD(XS).DWG Plotted on 8-Oct-2015 2:17 PM

MAYNARD & ACTON
ASSABET RIVER RAIL TRAIL

HOR. SCALE IN FEET
4 0 4 8
4 0 4 8
VER. SCALE IN FEET

STATE	FED. AID PROJ. NO.	SHEET NO.	TOTAL SHEETS
MA	CMAQ/STP-TE-002S(836)	186	230
PROJECT FILE NO.	604531		

CROSS SECTIONS

76+00

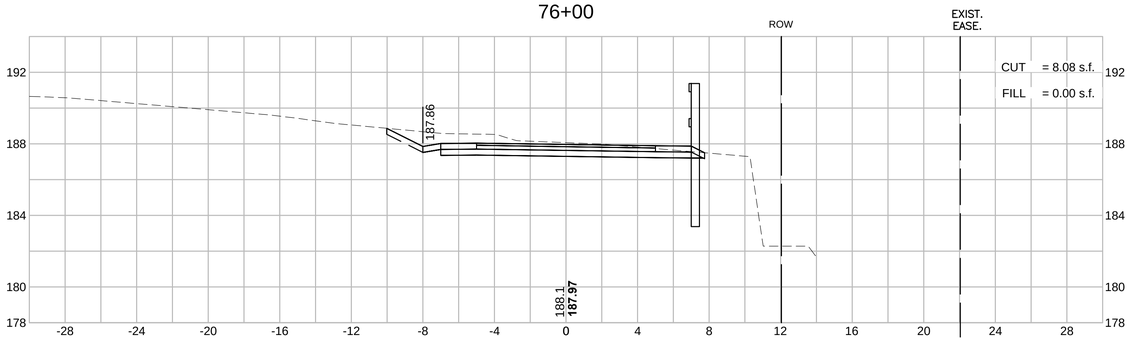

77+50

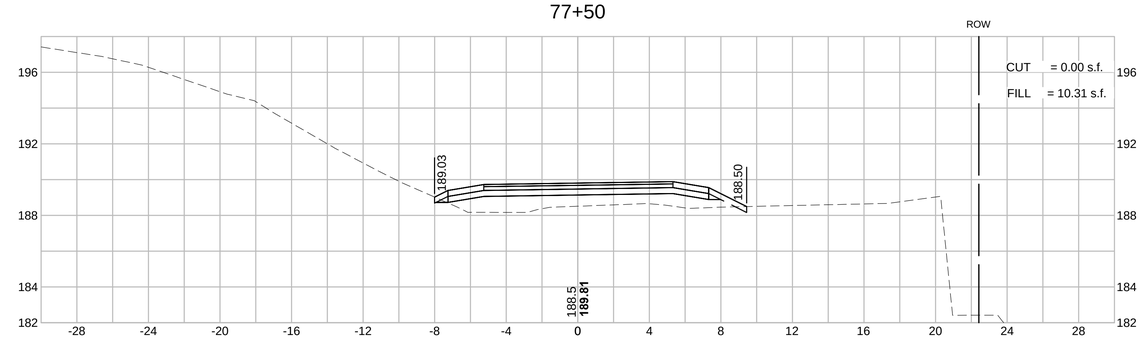

UP
+55
17' R

75+50

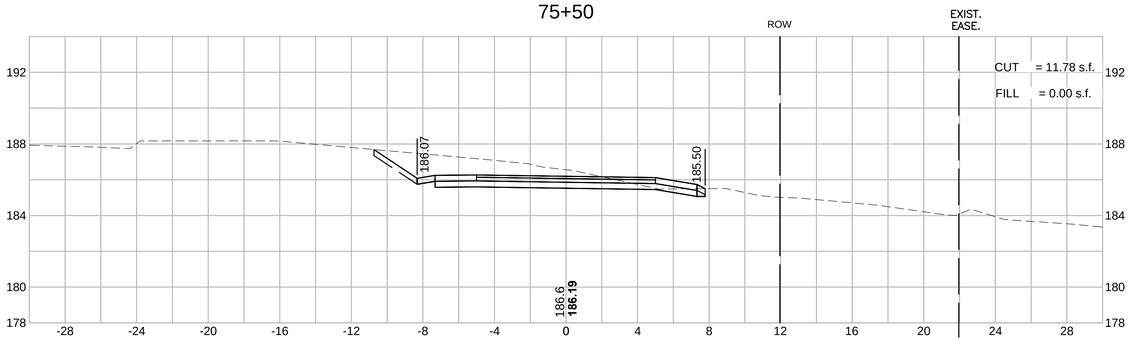

77+00

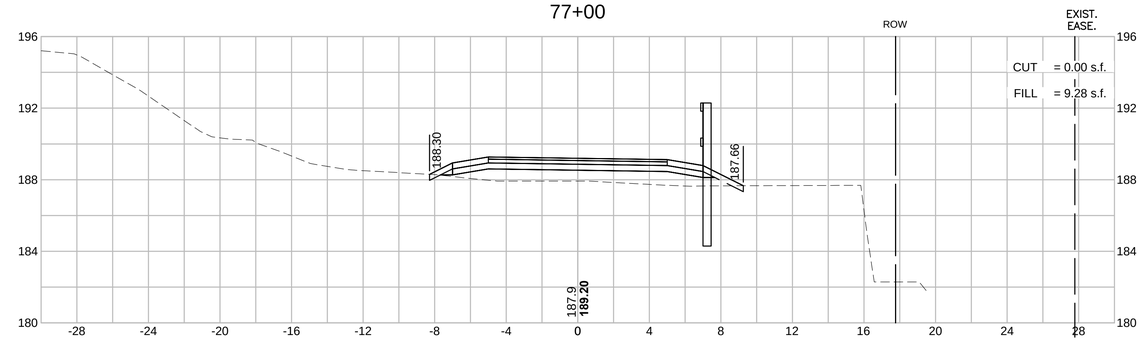

UP
+93
12' R

75+00

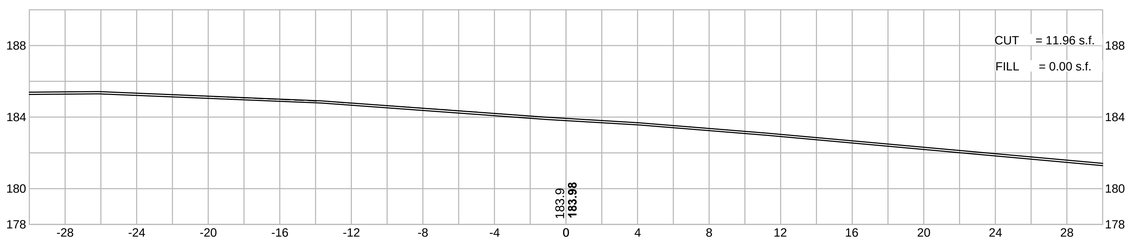

76+50

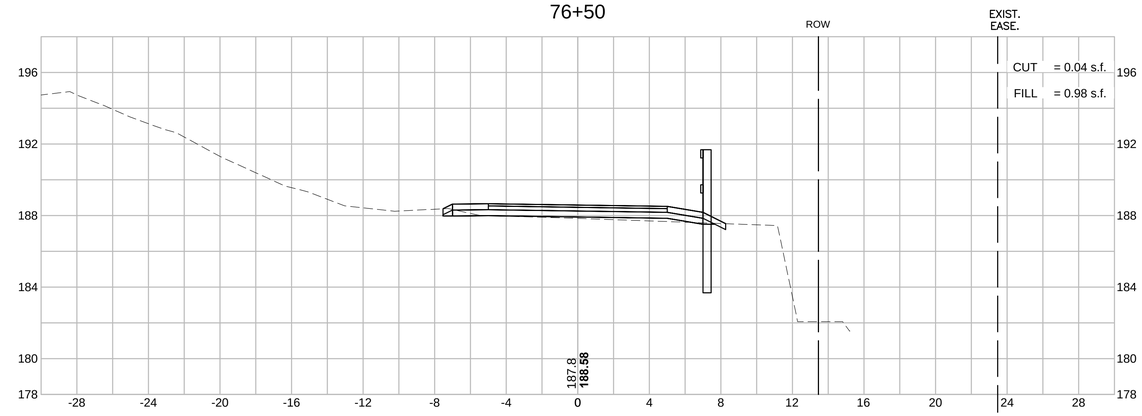

604531_HD(XS).DWG Plotted on 8-Oct-2015 2:17 PM

MAYNARD & ACTON
ASSABET RIVER RAIL TRAIL

STATE	FED. AID PROJ. NO.	SHEET NO.	TOTAL SHEETS
MA	CMAQ/STP-TE-002S(836)	185	230
PROJECT FILE NO.	604531		

HOR. SCALE IN FEET
4 0 4 8
4 0 4 8
VER. SCALE IN FEET

CROSS SECTIONS

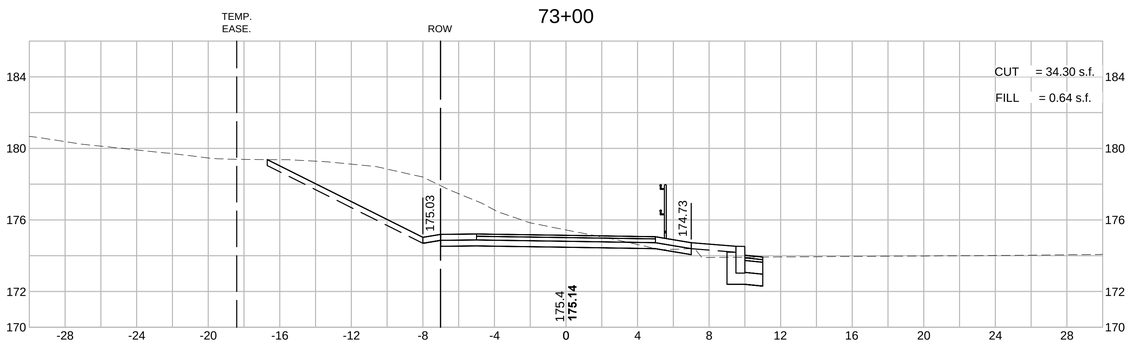

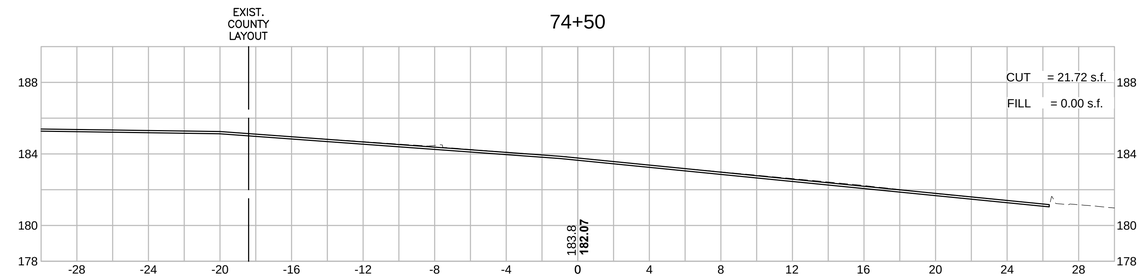

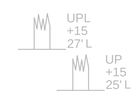

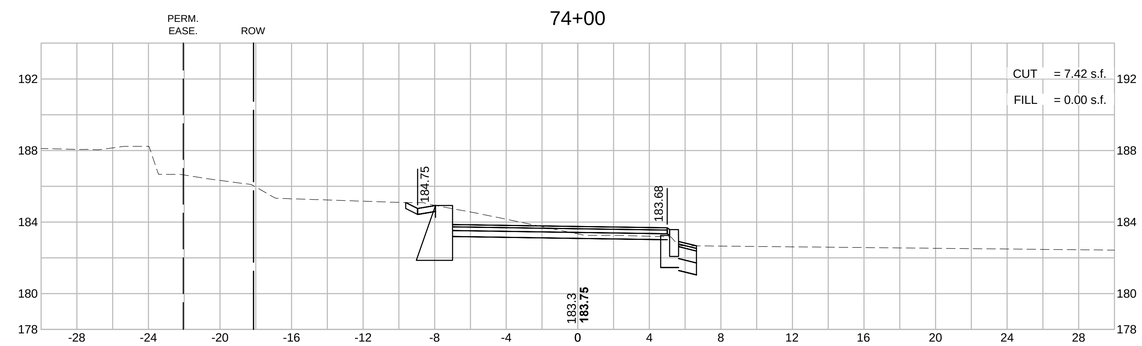

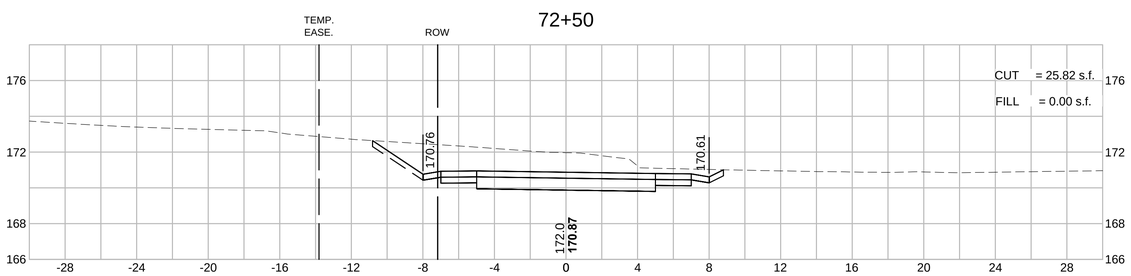

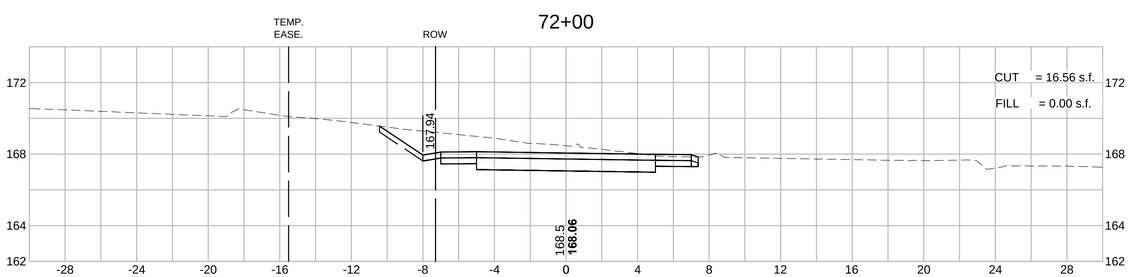

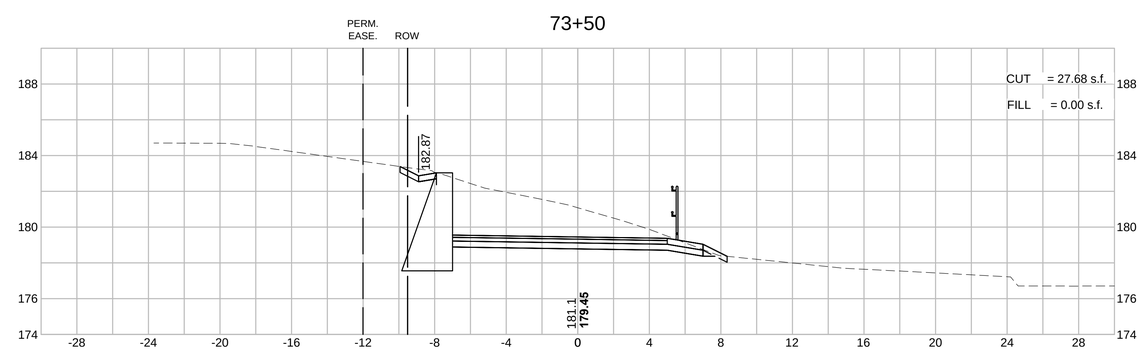

604531_HD(XS).DWG Plotted on 8-Oct-2015 2:16 PM

MAYNARD & ACTON
ASSABET RIVER RAIL TRAIL

HOR. SCALE IN FEET
4 0 4 8
4 0 4 8
VER. SCALE IN FEET

STATE	FED. AID PROJ. NO.	SHEET NO.	TOTAL SHEETS
MA	CMAQ/STP-TE-002S(836)	184	230
PROJECT FILE NO.	604531		

CROSS SECTIONS

604531_HD(XS).DWG Plotted on 8-Oct-2015 2:16 PM

70+00

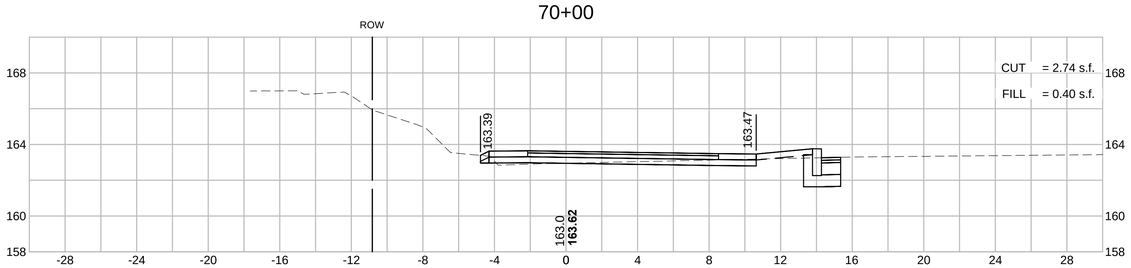

71+50

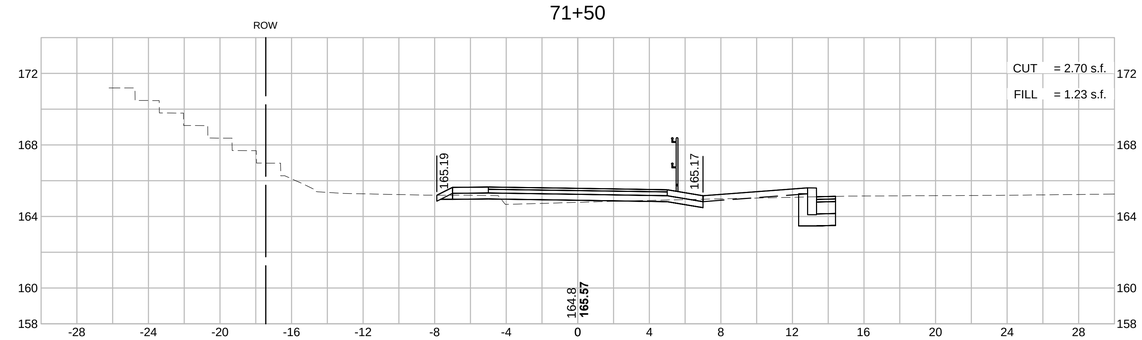

UPLP
+78
10' L

69+50

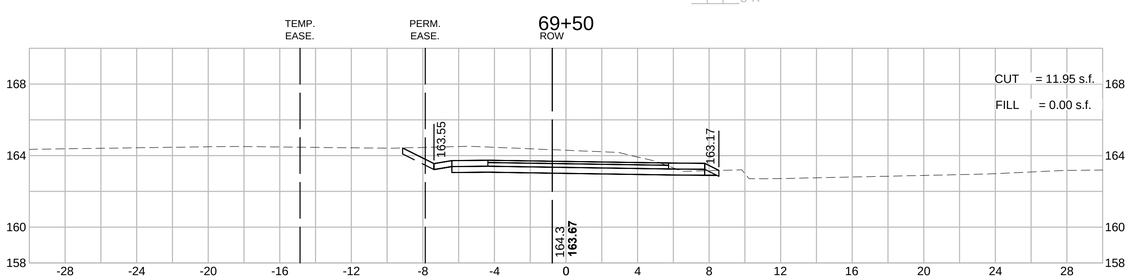

71+00

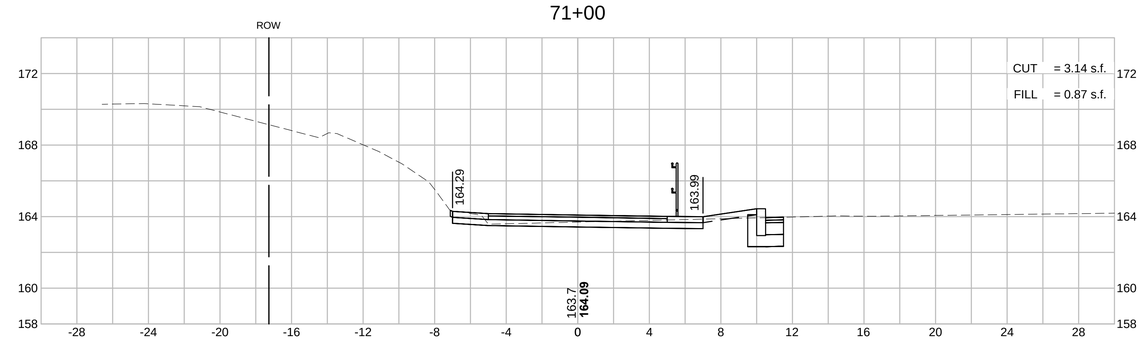

69+00

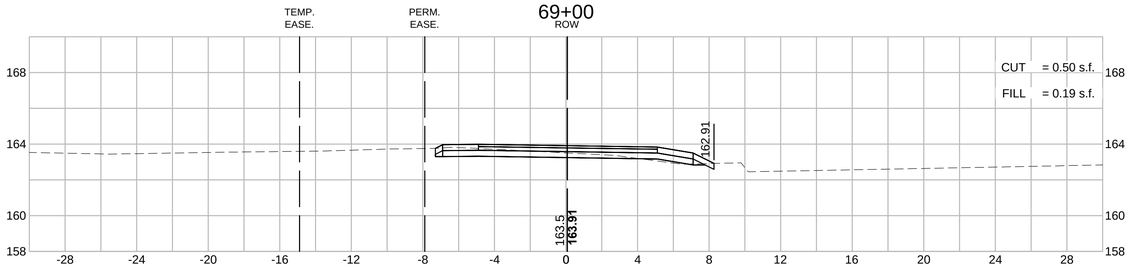

70+50

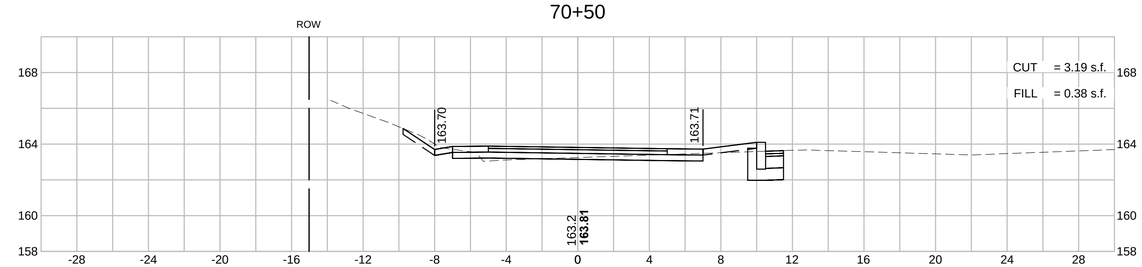

MAYNARD & ACTON
ASSABET RIVER RAIL TRAIL

STATE	FED. AID PROJ. NO.	SHEET NO.	TOTAL SHEETS
MA	CMAQ/STP-TE-002S(836)	183	230
PROJECT FILE NO.	604531		

CROSS SECTIONS

HOR. SCALE IN FEET
4 0 4 8
VER. SCALE IN FEET
4 0 4 8

67+00

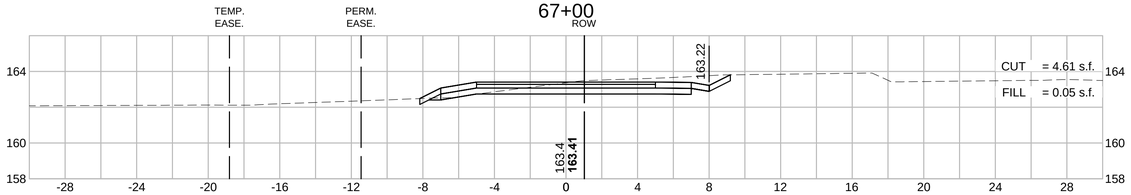

66+65

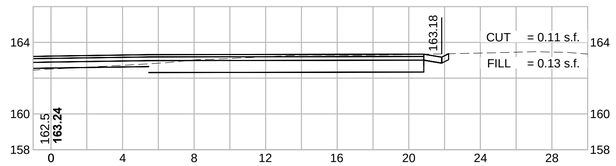

68+50

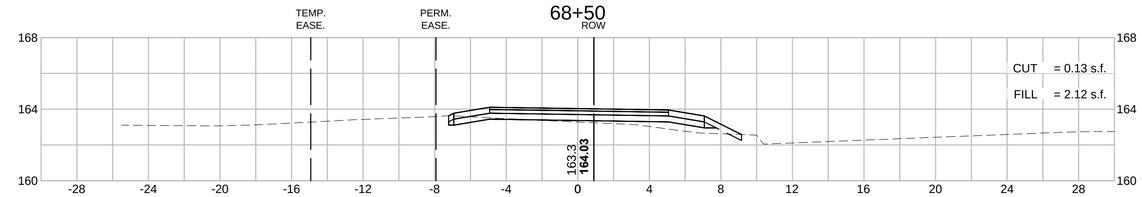

66+50

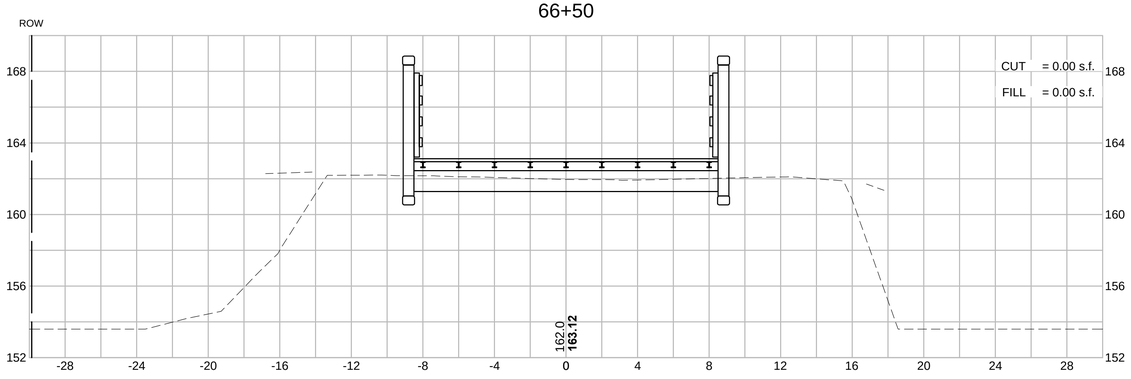

68+00

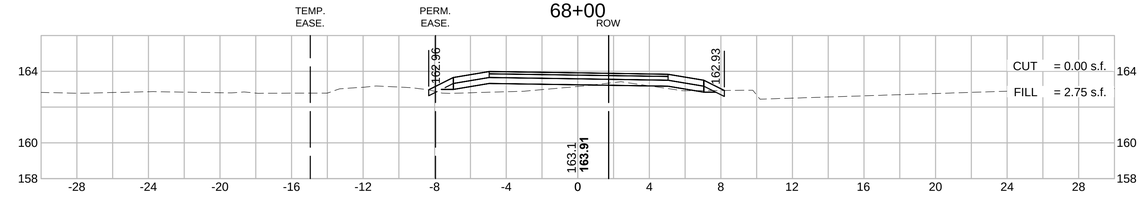

66+00

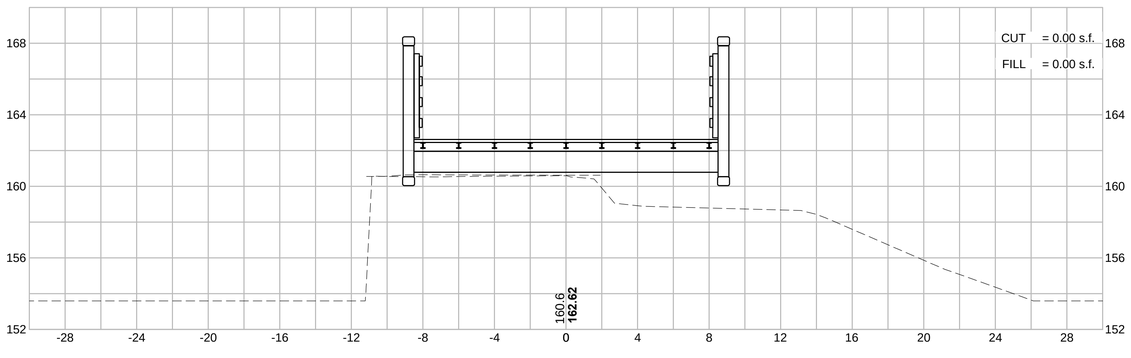

67+50

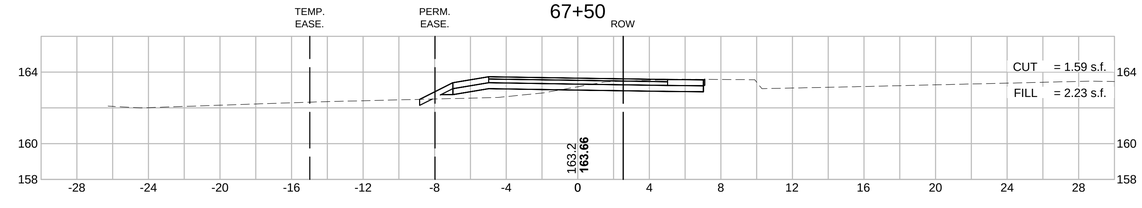

604531_HD(XS).DWG Plotted on 8-Oct-2015 2:15 PM

MAYNARD & ACTON
ASSABET RIVER RAIL TRAIL

STATE	FED. AID PROJ. NO.	SHEET NO.	TOTAL SHEETS
MA	CMAQ/STP-TE-002S(836)	182	230
PROJECT FILE NO.	604531		

HOR. SCALE IN FEET
4 0 4 8
4 0 4 8
VER. SCALE IN FEET

CROSS SECTIONS

64+00

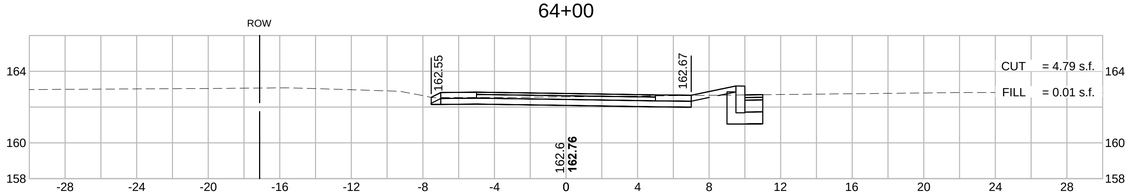

65+50

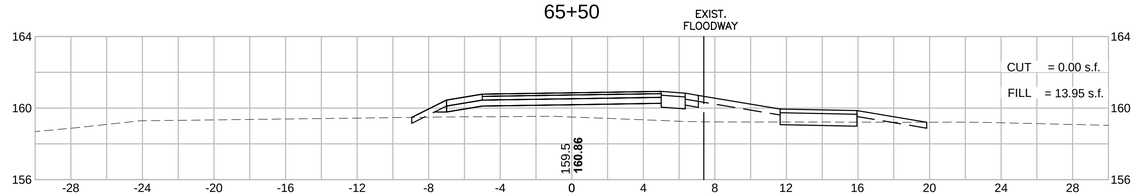

63+50

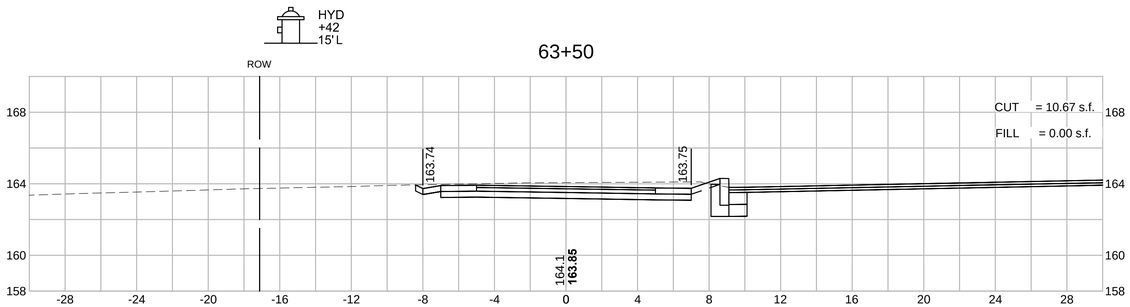

65+42

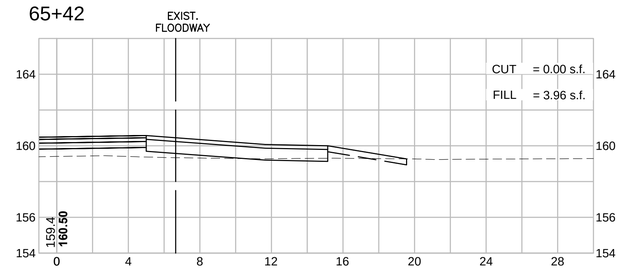

63+00

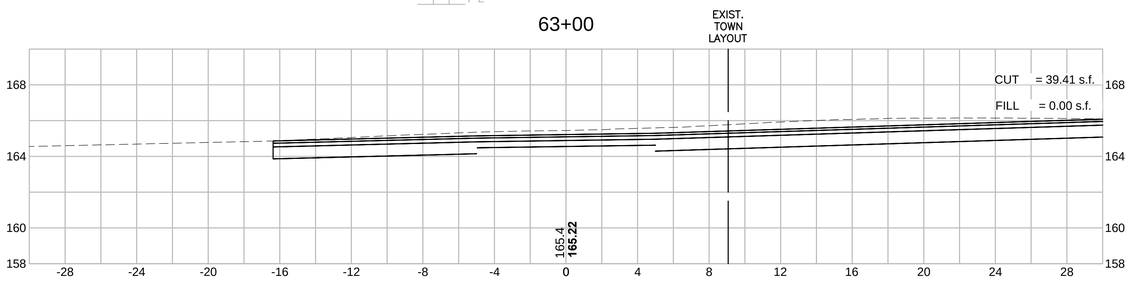

65+00

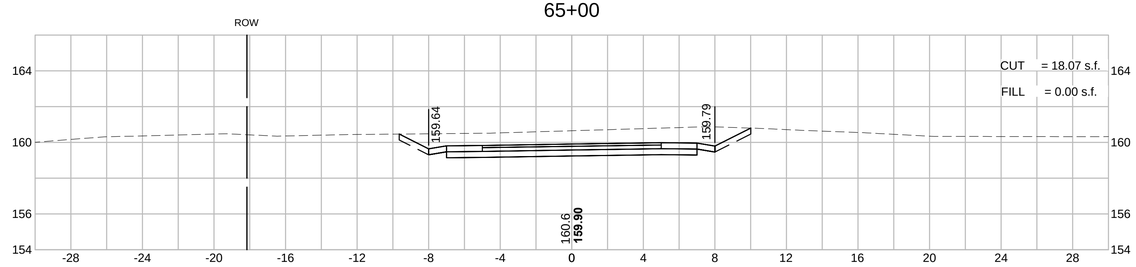

62+50

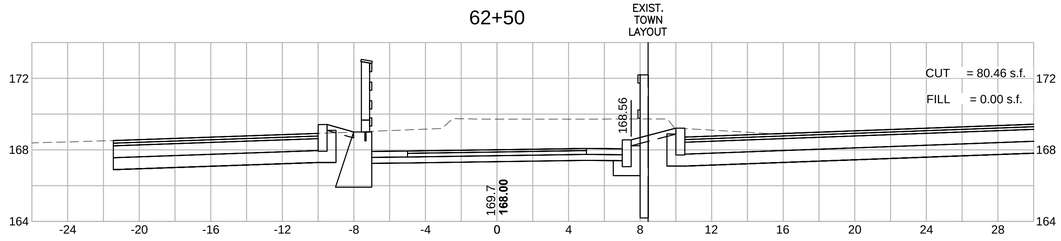

64+50

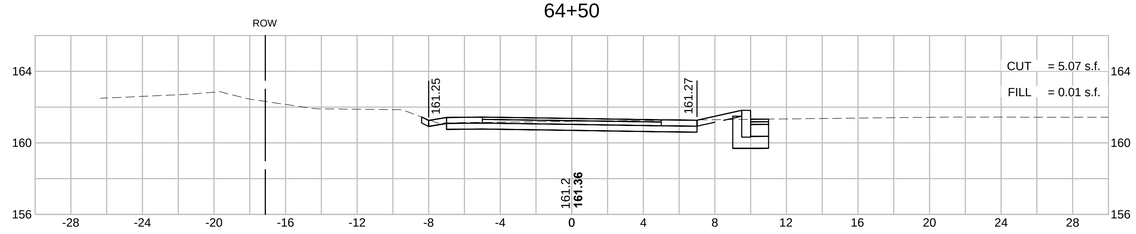

604531_HD(XS).DWG Plotted on 8-Oct-2015 2:14 PM

HOR. SCALE IN FEET
4 0 4 8
4 0 4 8
VER. SCALE IN FEET

MAYNARD & ACTON
ASSABET RIVER RAIL TRAIL

STATE	FED. AID PROJ. NO.	SHEET NO.	TOTAL SHEETS
MA	CMAQ/STP-TE-002S(836)	181	230
PROJECT FILE NO.	604531		

CROSS SECTIONS

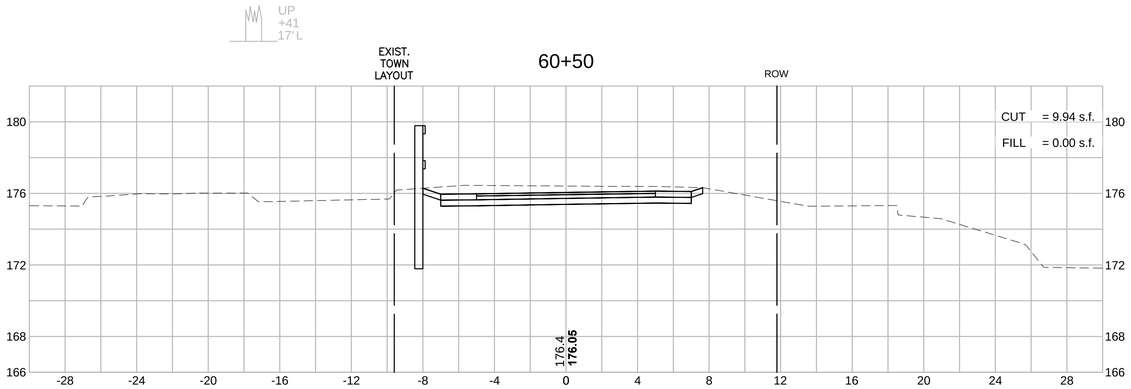

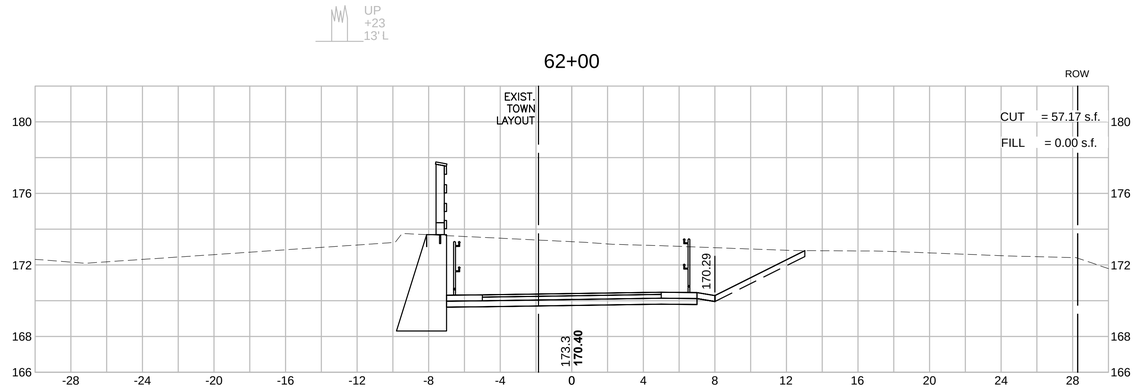

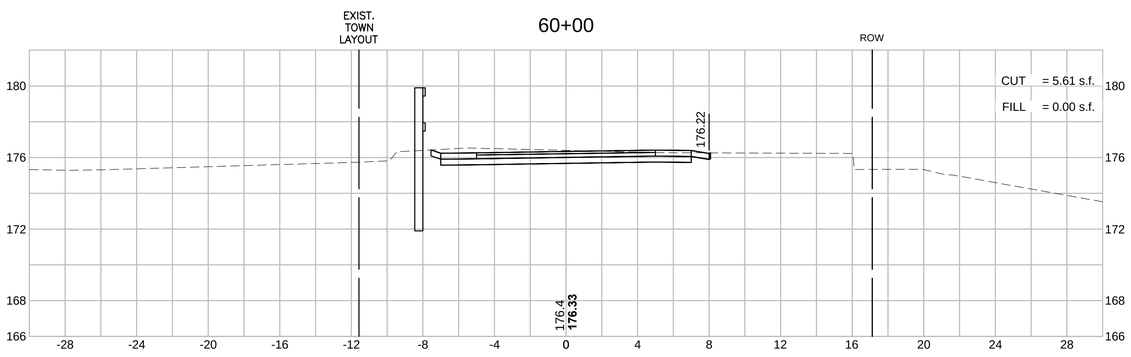

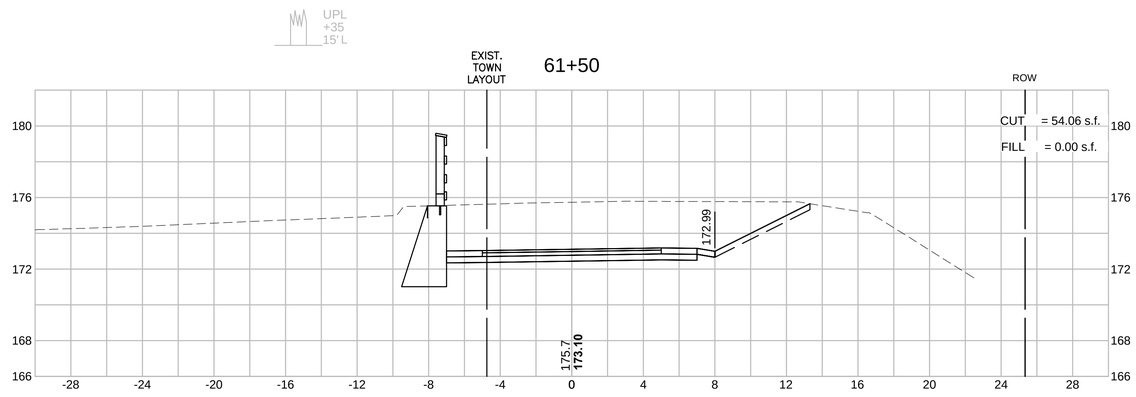

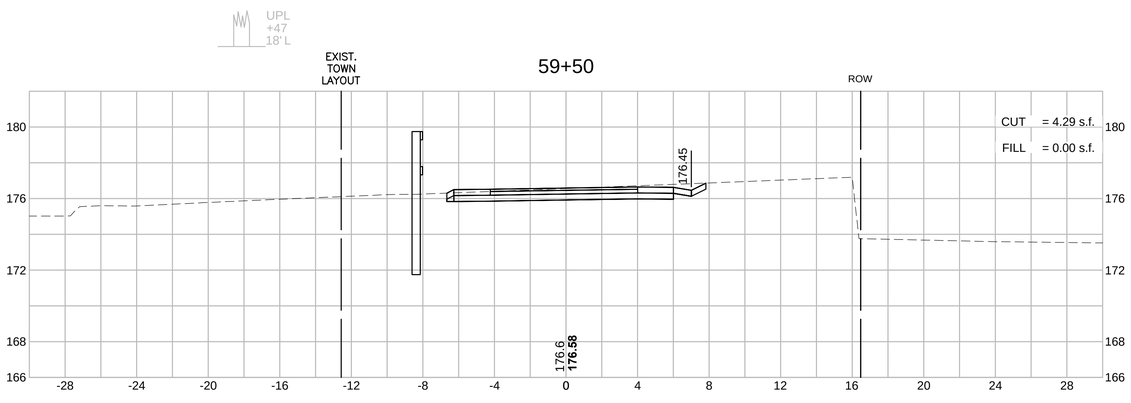

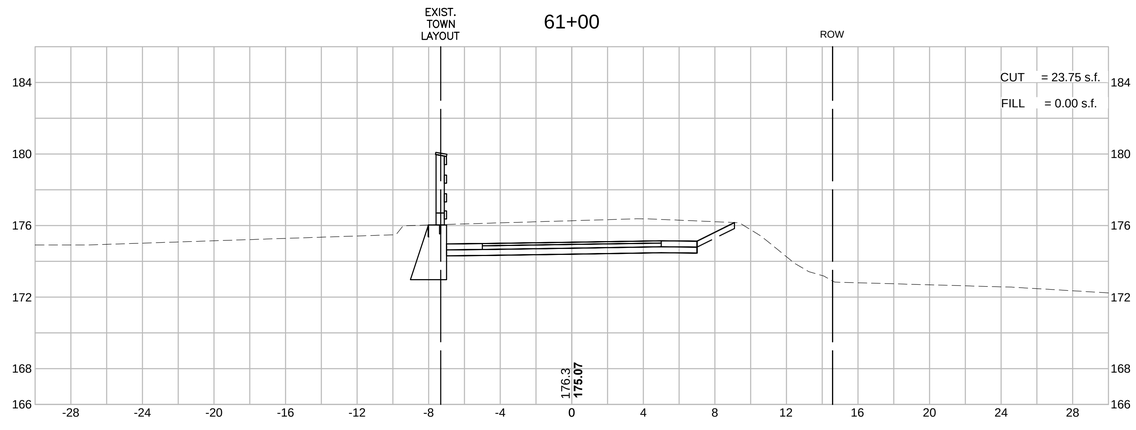

604531_HD(XS).DWG Plotted on 8-Oct-2015 2:14 PM

MAYNARD & ACTON
ASSABET RIVER RAIL TRAIL

STATE	FED. AID PROJ. NO.	SHEET NO.	TOTAL SHEETS
MA	CMAQ/STP-TE-002S(836)	180	230
PROJECT FILE NO.	604531		

CROSS SECTIONS

HOR. SCALE IN FEET
4 0 4 8
4 0 4 8
VER. SCALE IN FEET

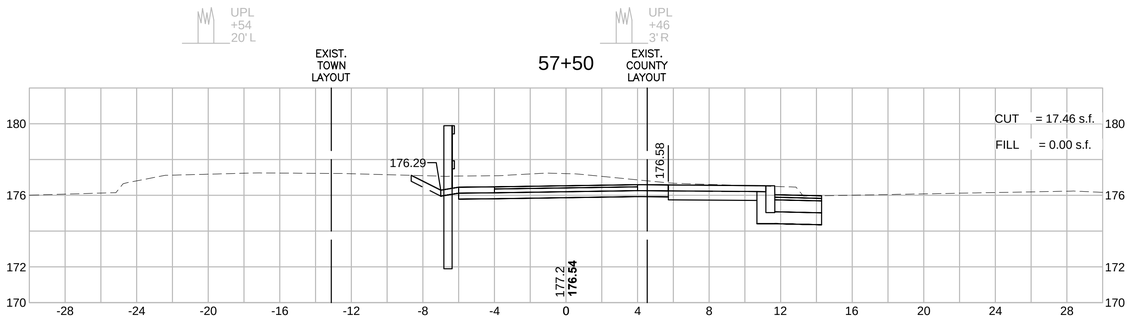

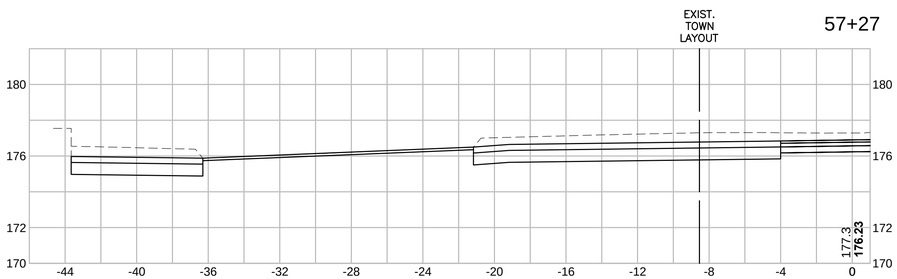

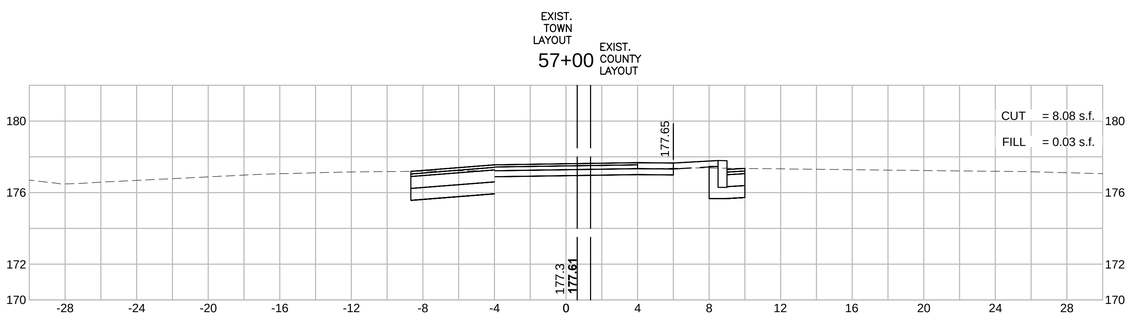

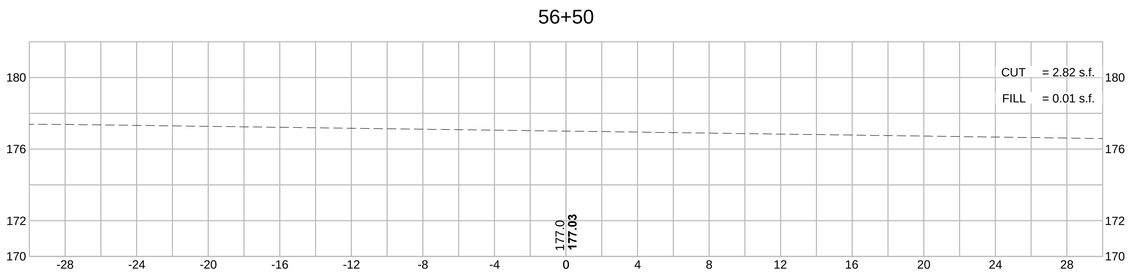

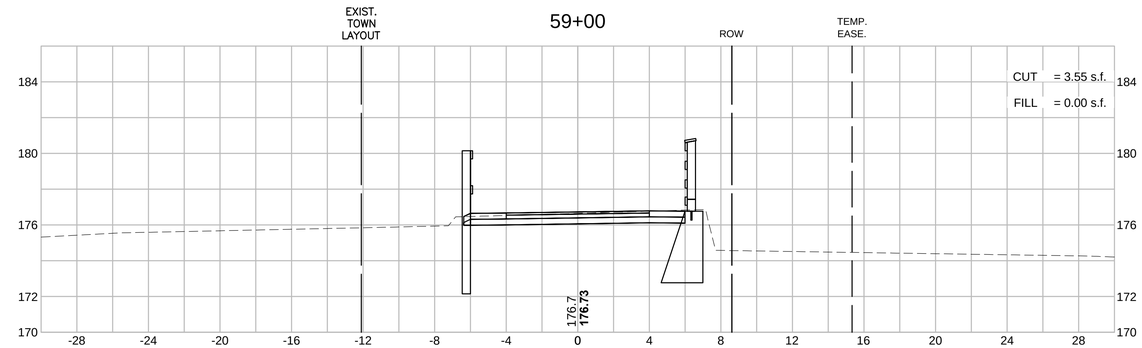

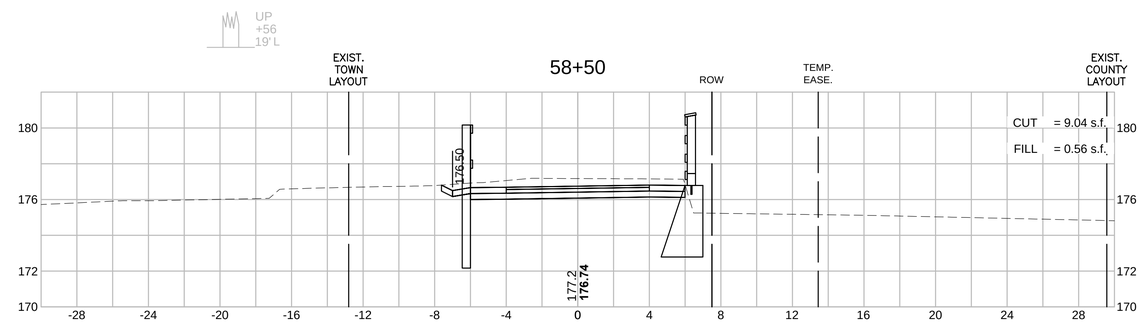

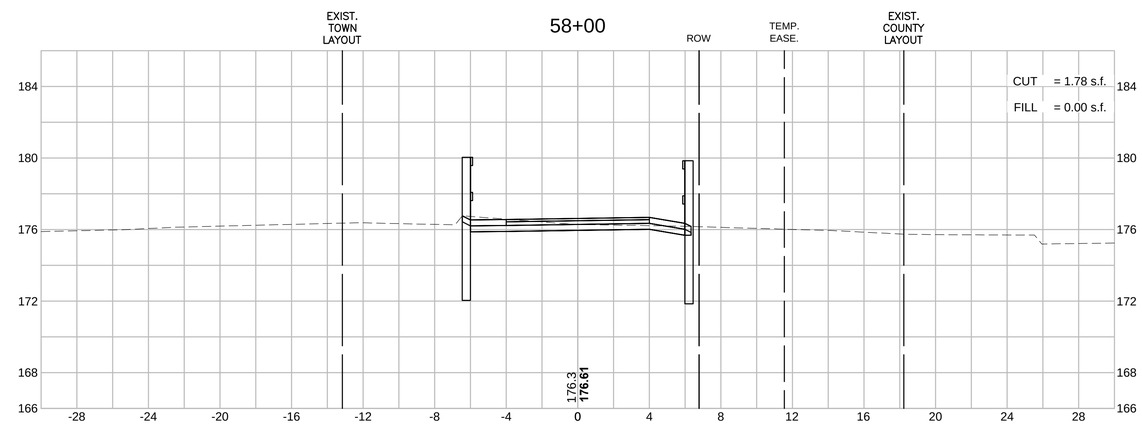

Plotted on 8-Oct-2015 2:13 PM
604531_HD(XS).DWG

HOR. SCALE IN FEET
4 0 4 8
4 0 4 8
VER. SCALE IN FEET

MAYNARD & ACTON
ASSABET RIVER RAIL TRAIL

STATE	FED. AID PROJ. NO.	SHEET NO.	TOTAL SHEETS
MA	CMAQ/STP-TE-002S(836)	179	230
PROJECT FILE NO.	604531		

CROSS SECTIONS

604531_HD(XS).DWG Plotted on 8-Oct-2015 2:12 PM

55+00

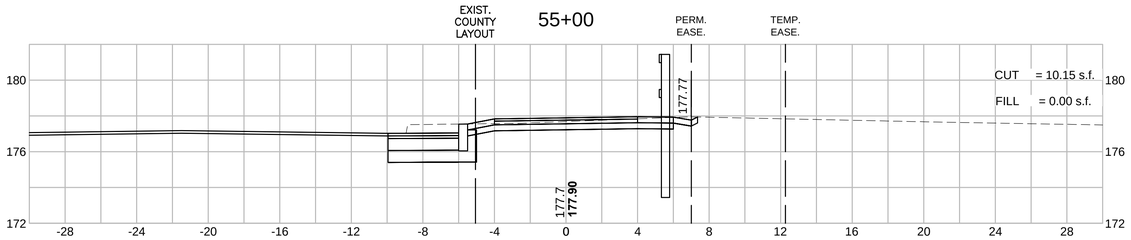

56+42

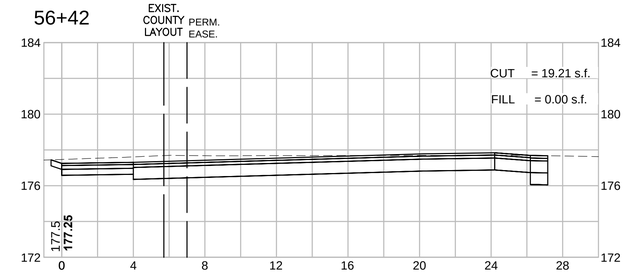

54+50

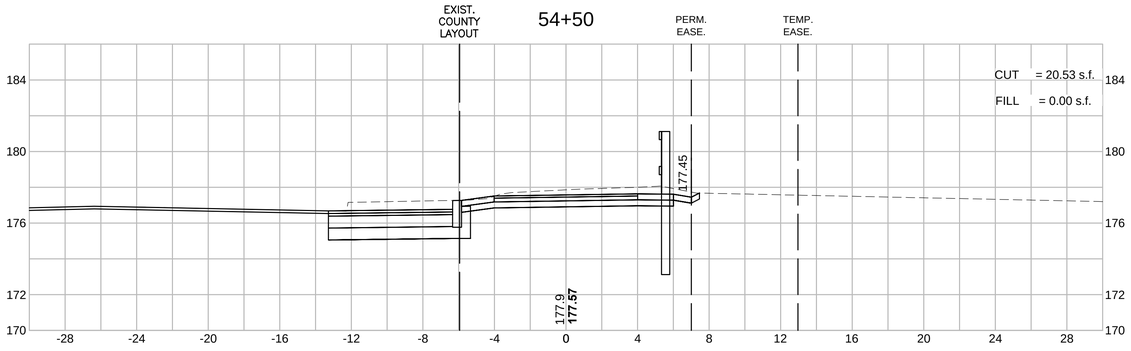

56+00

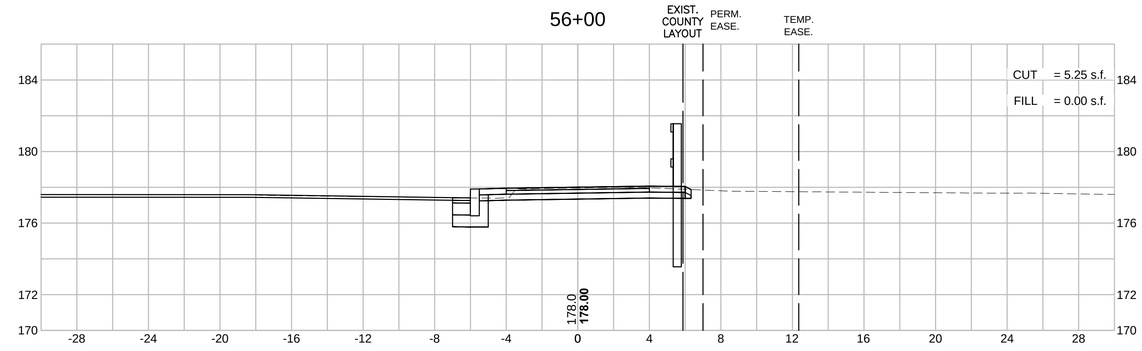

54+00

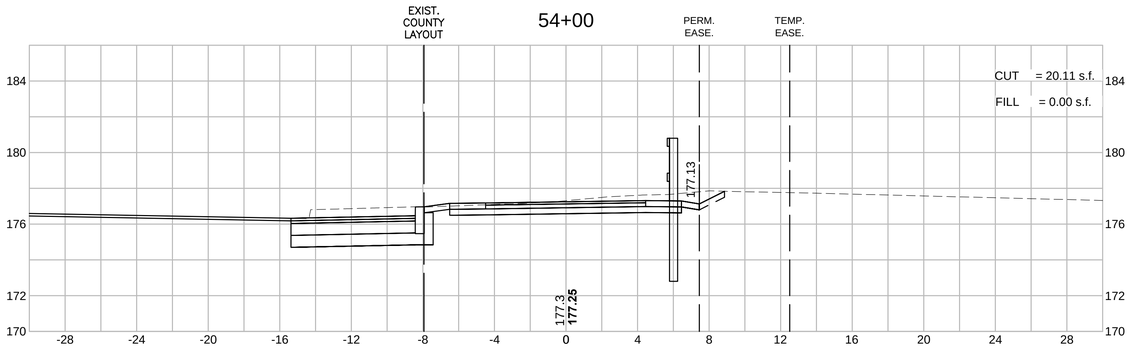

55+50

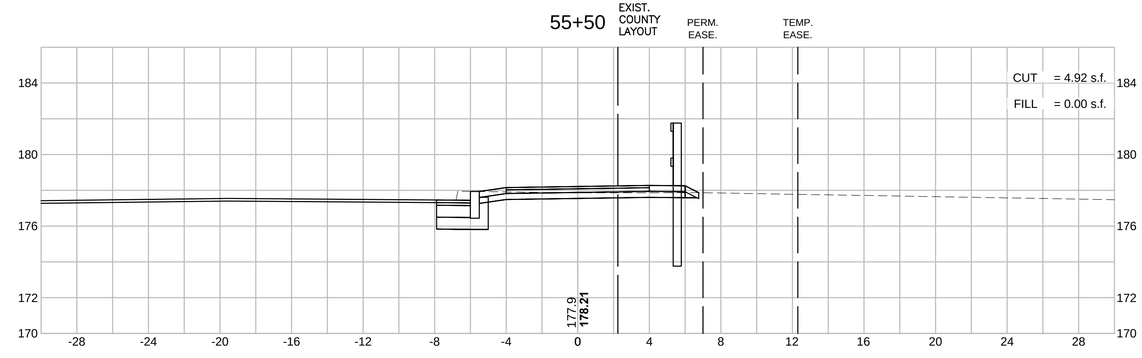

HOR. SCALE IN FEET
4 0 4 8
4 0 4 8
VER. SCALE IN FEET

MAYNARD & ACTON
ASSABET RIVER RAIL TRAIL

STATE	FED. AID PROJ. NO.	SHEET NO.	TOTAL SHEETS
MA	CMAQ/STP-TE-002S(836)	178	230
PROJECT FILE NO.	604531		

CROSS SECTIONS

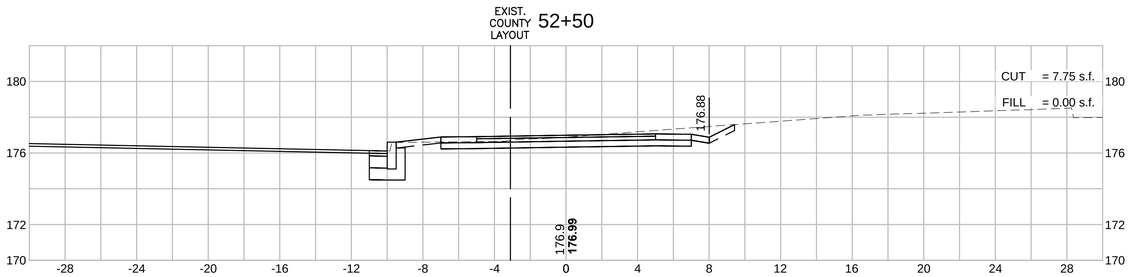

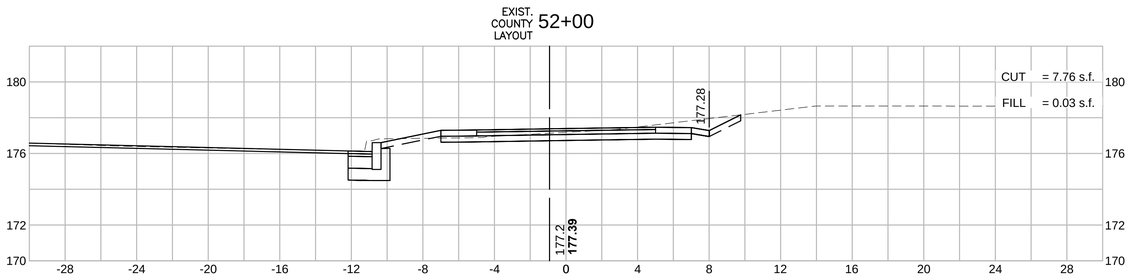

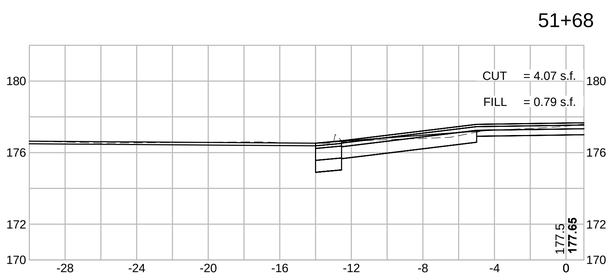

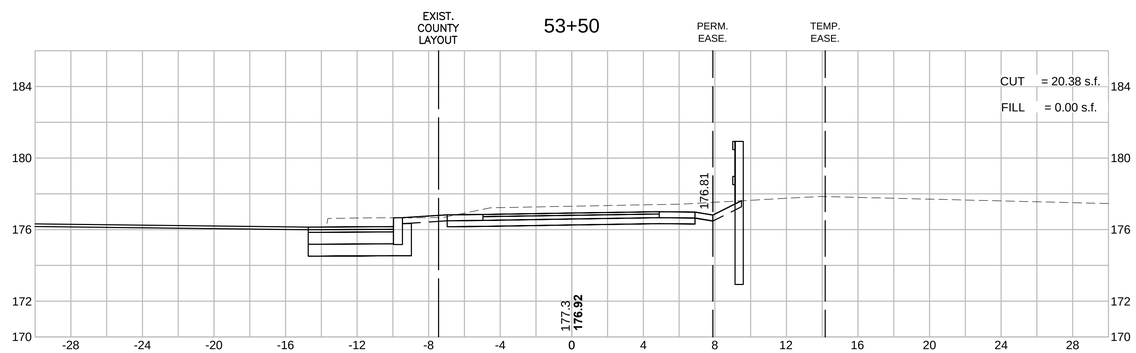

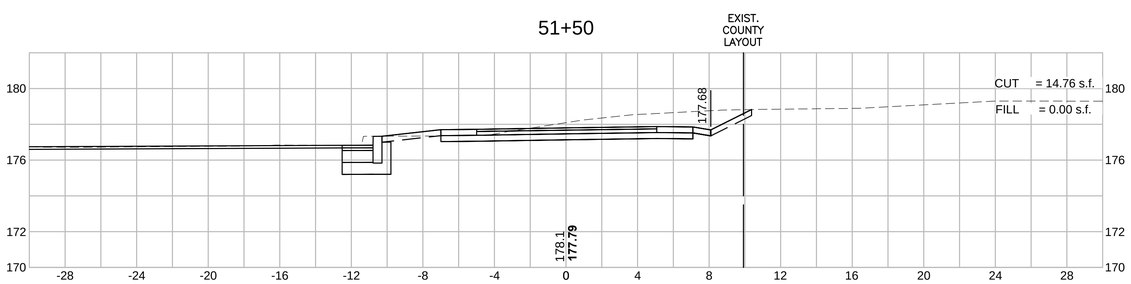

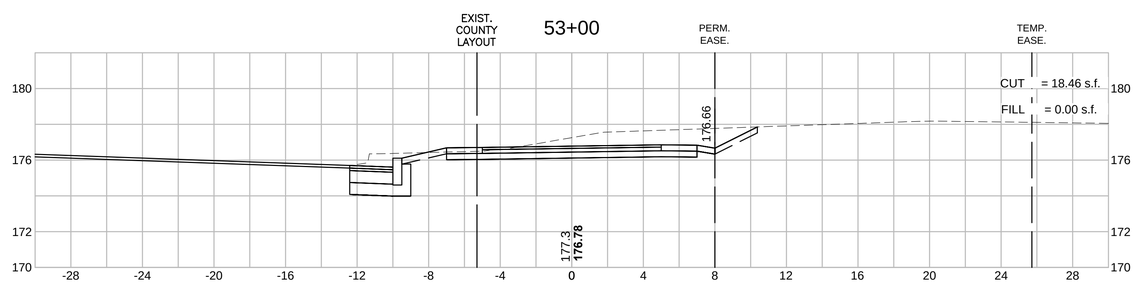

604531_HD(XS).DWG Plotted on 8-Oct-2015 2:12 PM

MAYNARD & ACTON
ASSABET RIVER RAIL TRAIL

STATE	FED. AID PROJ. NO.	SHEET NO.	TOTAL SHEETS
MA	CMAQ/STP-TE-002S(836)	177	230
PROJECT FILE NO.	604531		

HOR. SCALE IN FEET
4 0 4 8
4 0 4 8
VER. SCALE IN FEET

CROSS SECTIONS

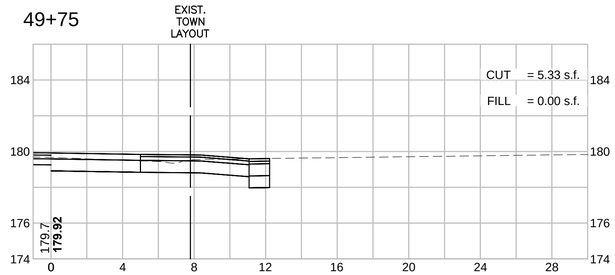

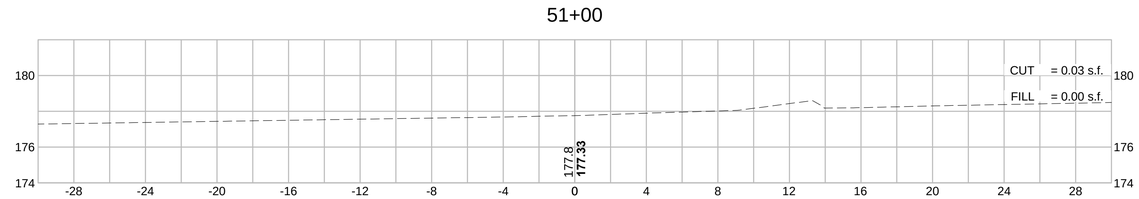

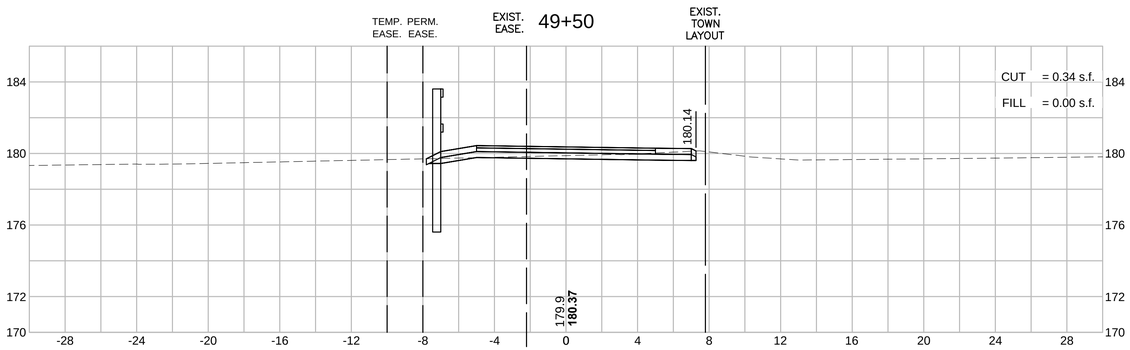

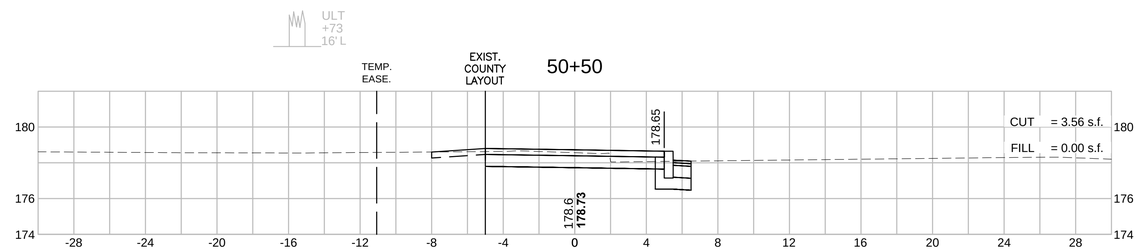

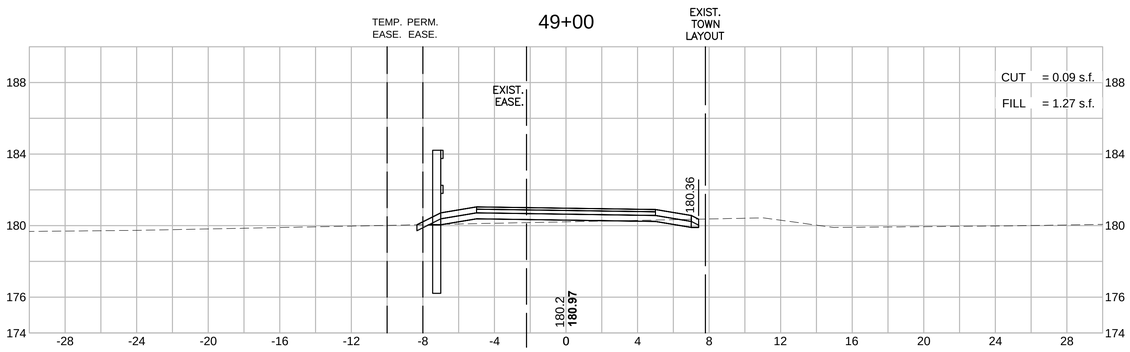

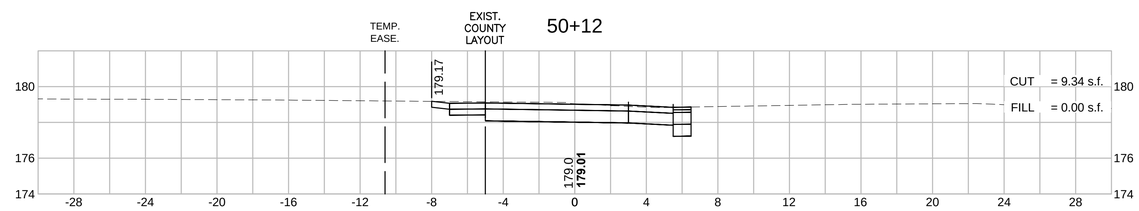

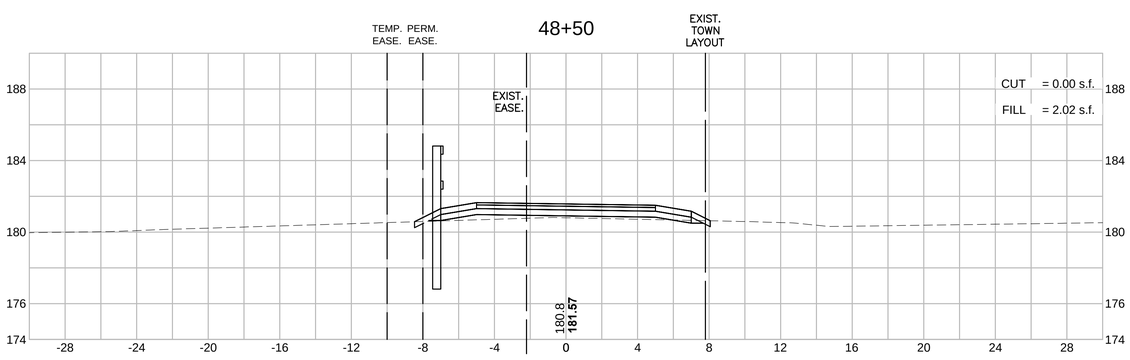

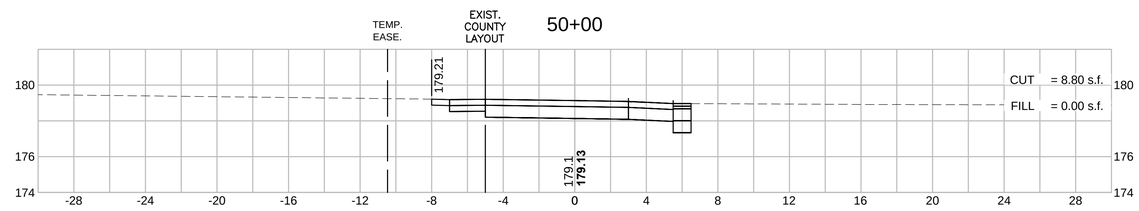

604531_HD(XS).DWG Plotted on 8-Oct-2015 2:11 PM

HOR. SCALE IN FEET
4 0 4 8
4 0 4 8
VER. SCALE IN FEET

MAYNARD & ACTON
ASSABET RIVER RAIL TRAIL

STATE	FED. AID PROJ. NO.	SHEET NO.	TOTAL SHEETS
MA	CMAQ/STP-TE-002S(836)	176	230
PROJECT FILE NO.	604531		

CROSS SECTIONS

604531_HD(XS).DWG Plotted on 8-Oct-2015 2:11 PM

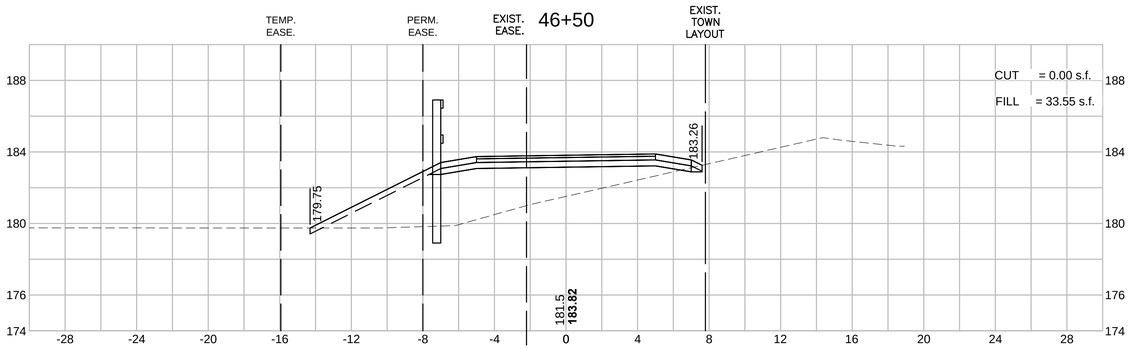

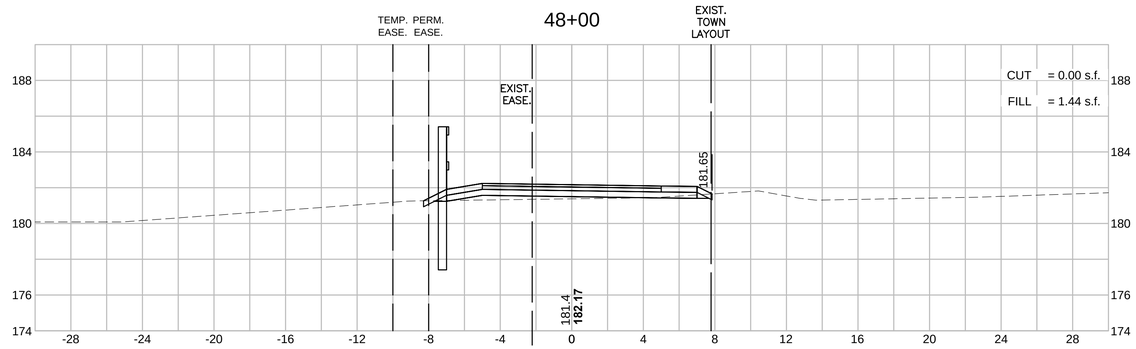

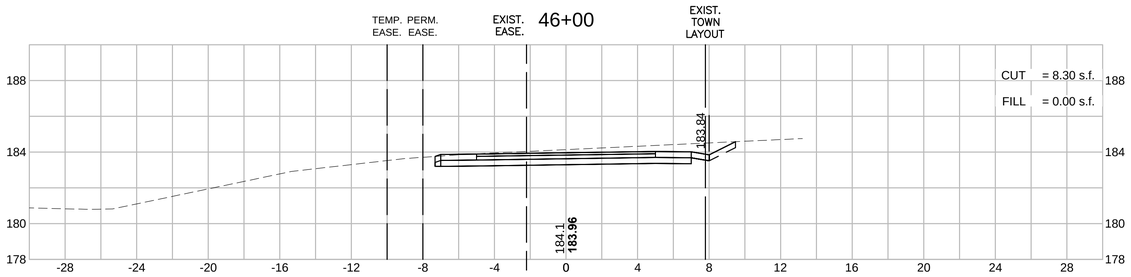

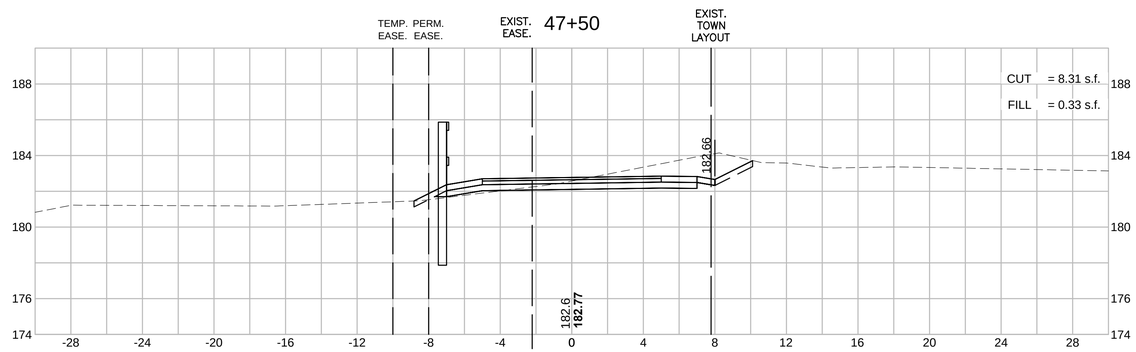

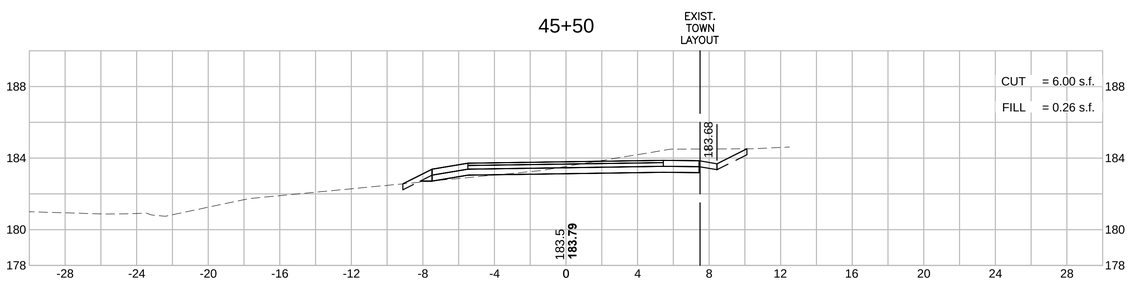

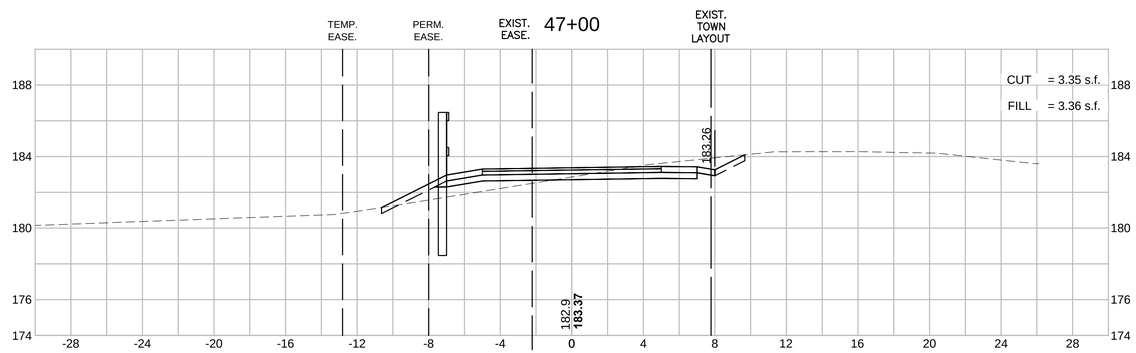

HOR. SCALE IN FEET
4 0 4 8
4 0 4 8
VER. SCALE IN FEET

MAYNARD & ACTON
ASSABET RIVER RAIL TRAIL

STATE	FED. AID PROJ. NO.	SHEET NO.	TOTAL SHEETS
MA	CMAQ/STP-TE-002S(836)	175	230
PROJECT FILE NO.	604531		

CROSS SECTIONS

43+50

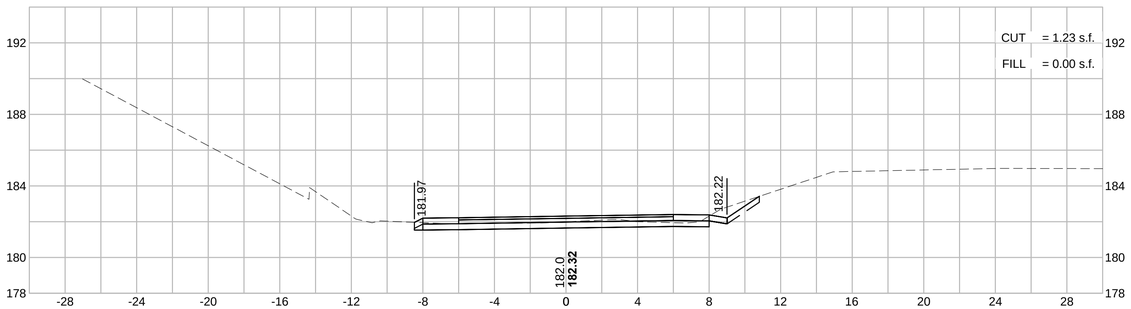

45+00

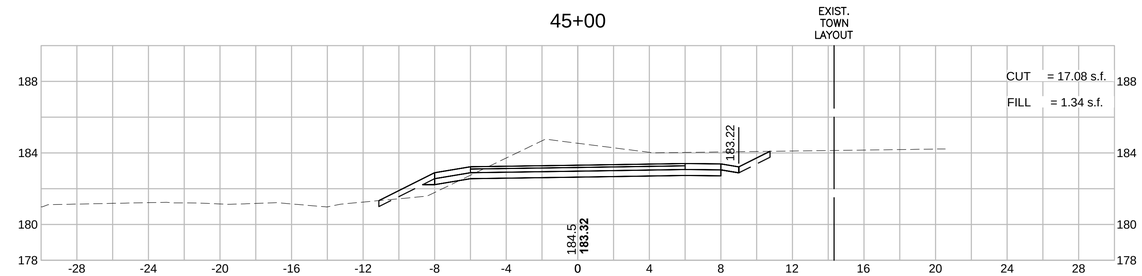

43+00

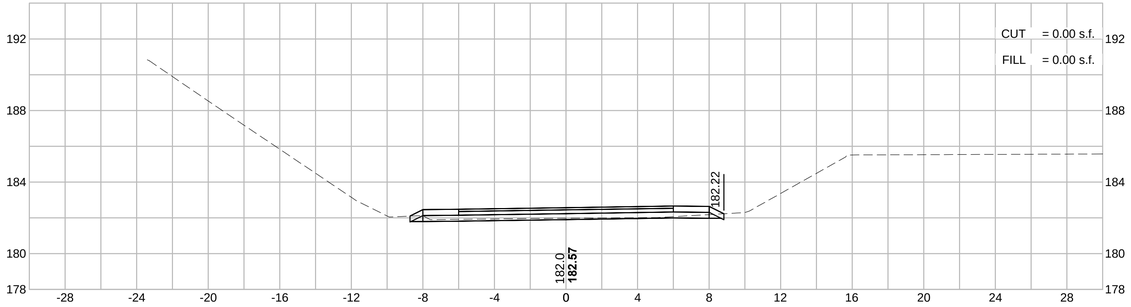

44+50

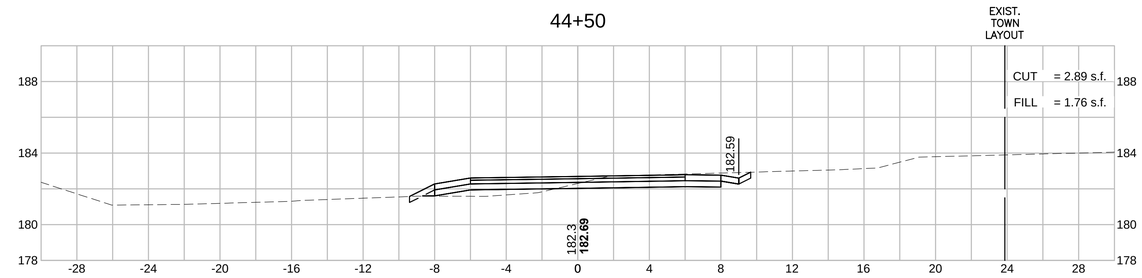

42+50

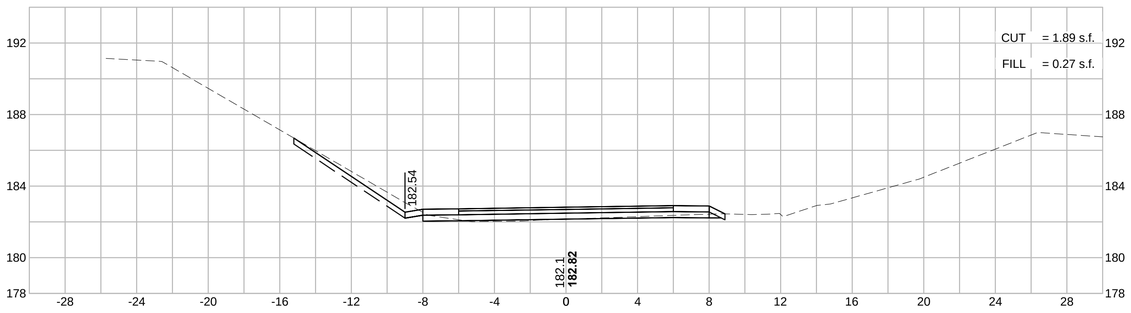

44+00

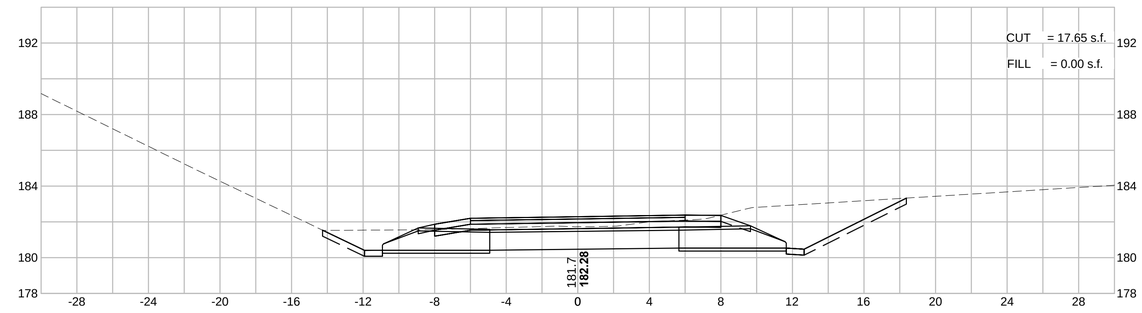

604531_HD(XS).DWG Plotted on 8-Oct-2015 2:10 PM

HOR. SCALE IN FEET
4 0 4 8
4 0 4 8
VER. SCALE IN FEET

MAYNARD & ACTON
ASSABET RIVER RAIL TRAIL

STATE	FED. AID PROJ. NO.	SHEET NO.	TOTAL SHEETS
MA	CMAQ/STP-TE-002S(836)	174	230
PROJECT FILE NO.	604531		

CROSS SECTIONS

40+50

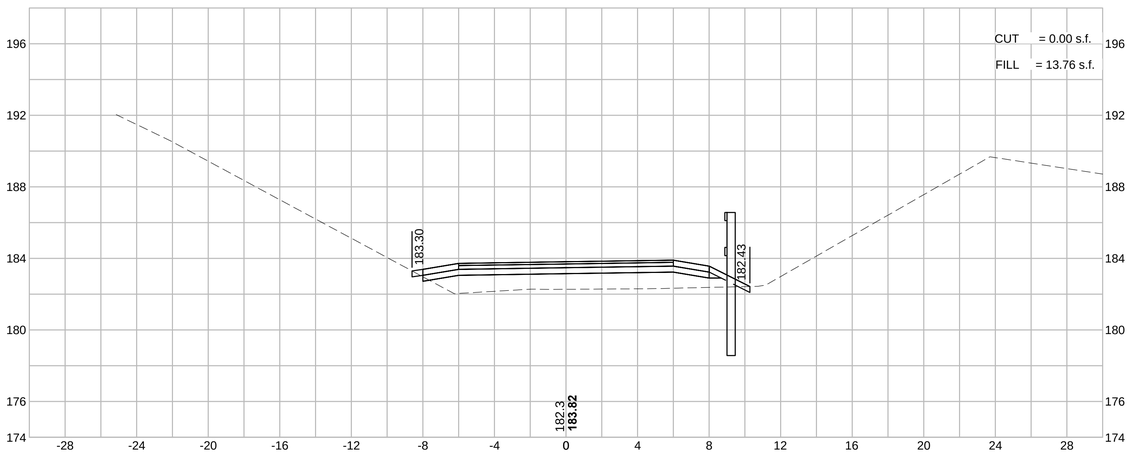

42+00

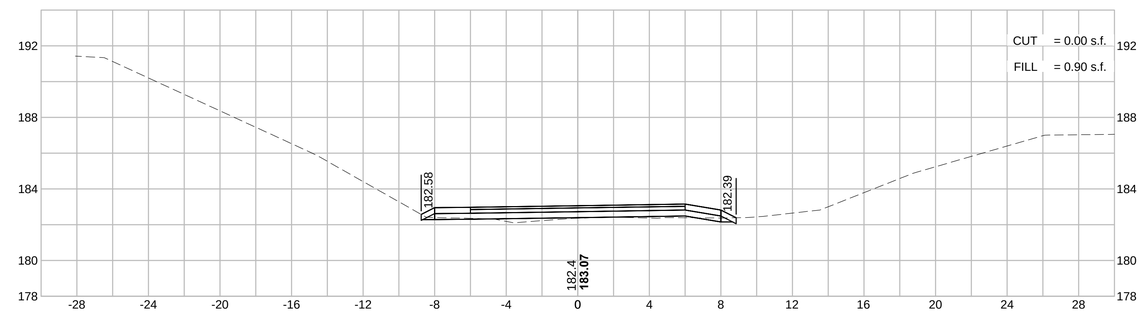

40+00

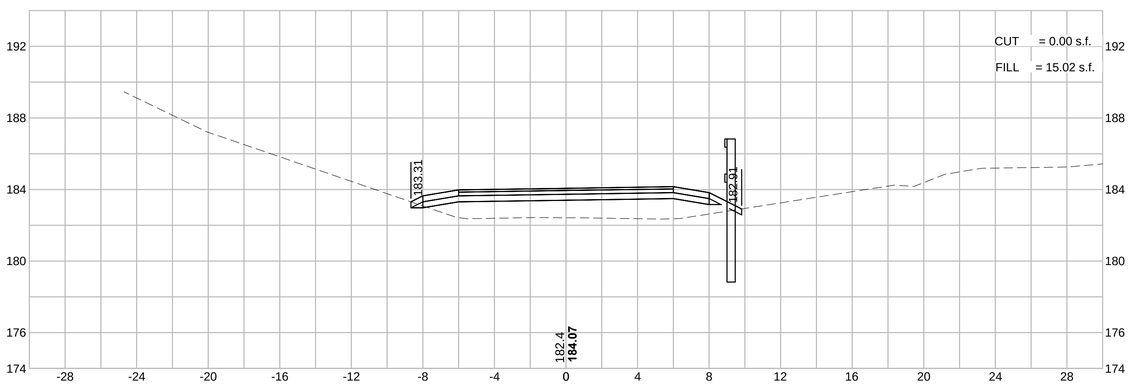

41+50

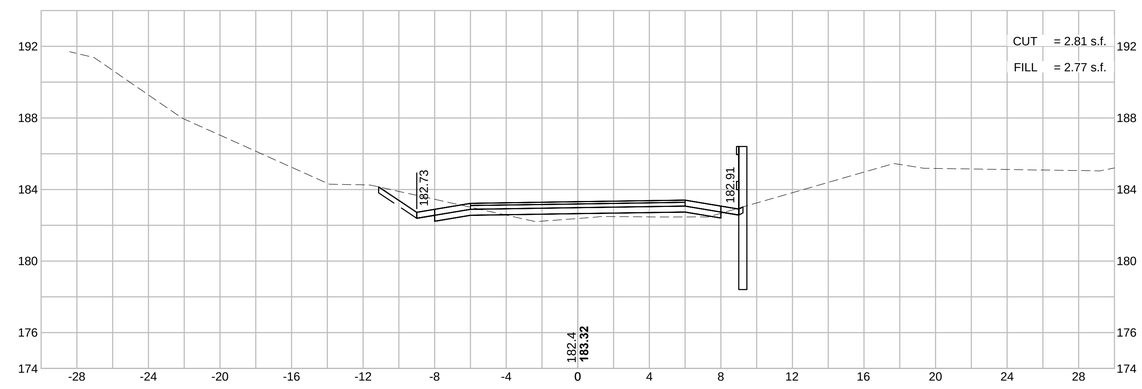

39+50

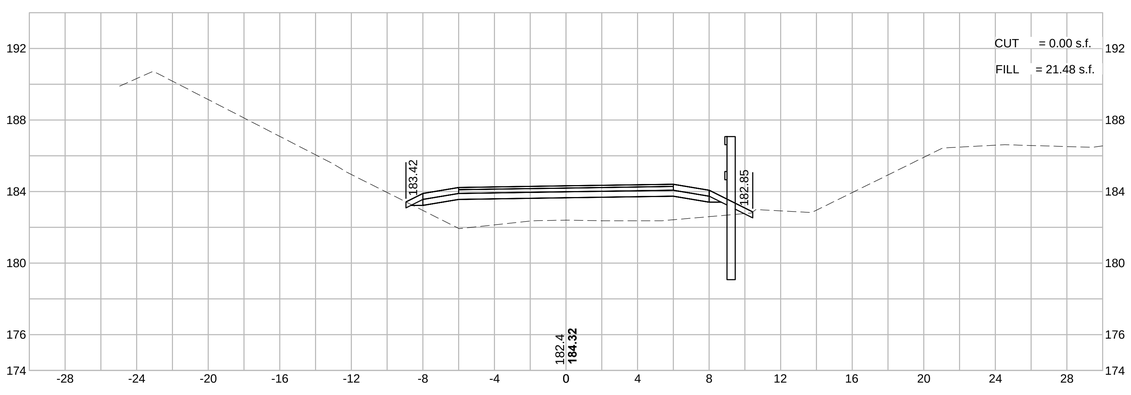

41+00

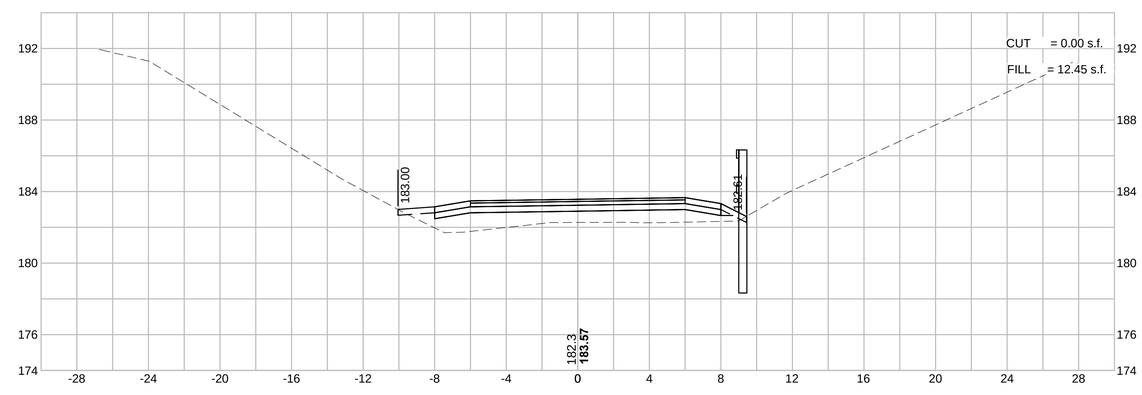

604531_HD(XS).DWG Plotted on 8-Oct-2015 2:10 PM

MAYNARD & ACTON
ASSABET RIVER RAIL TRAIL

STATE	FED. AID PROJ. NO.	SHEET NO.	TOTAL SHEETS
MA	CMAQ/STP-TE-002S(836)	173	230
PROJECT FILE NO.	604531		

HOR. SCALE IN FEET
4 0 4 8
4 0 4 8
VER. SCALE IN FEET

CROSS SECTIONS

37+50

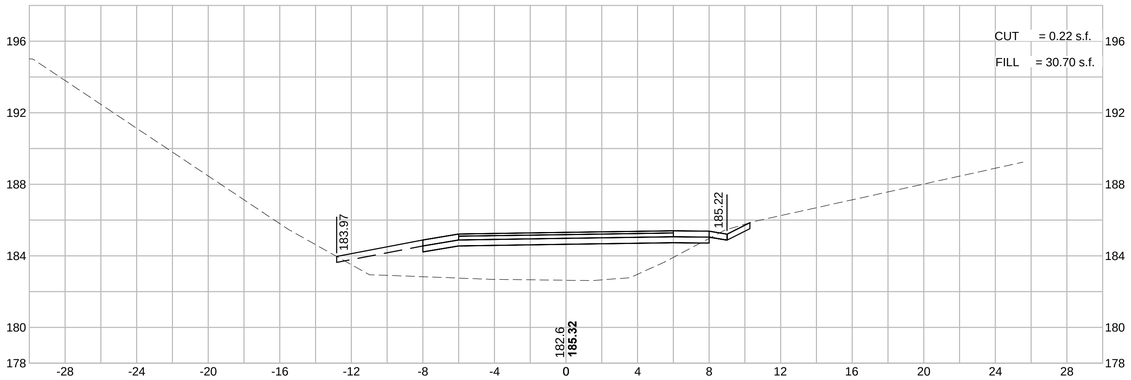

39+00

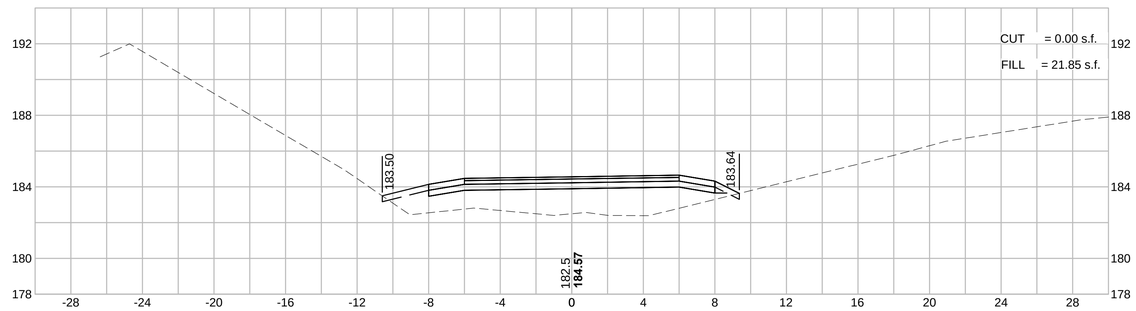

37+00

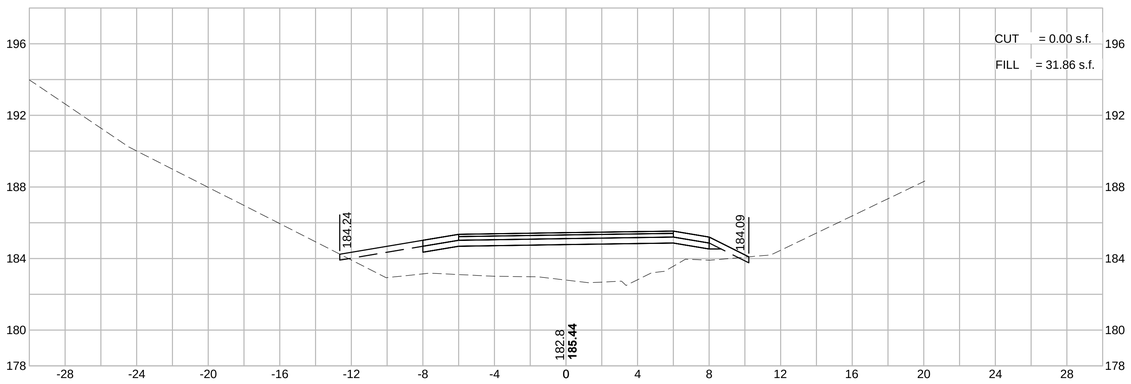

38+50

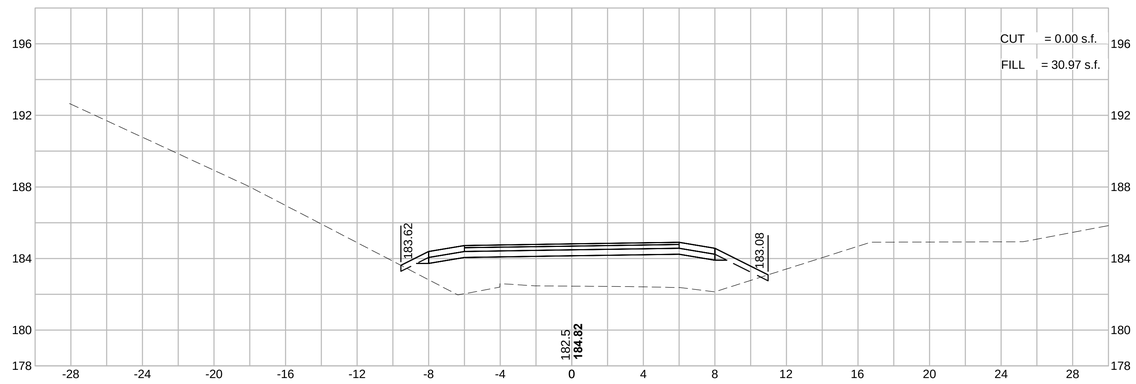

36+50

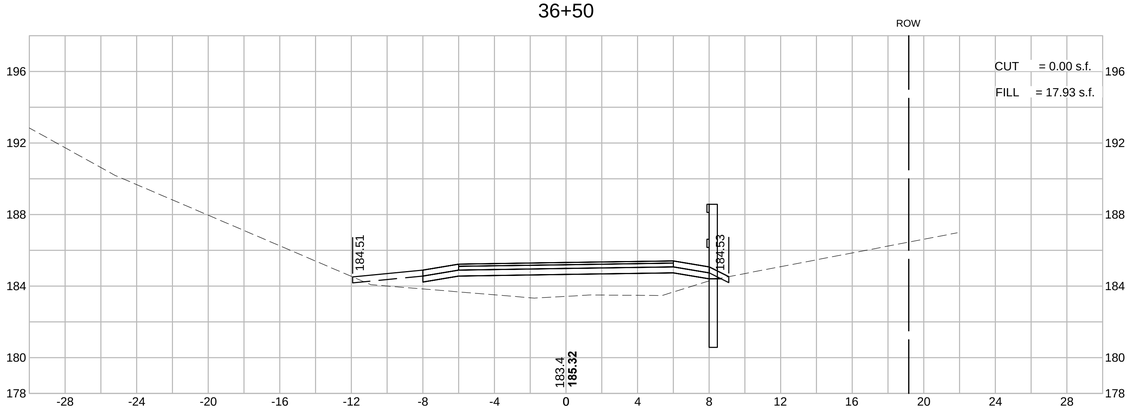

38+00

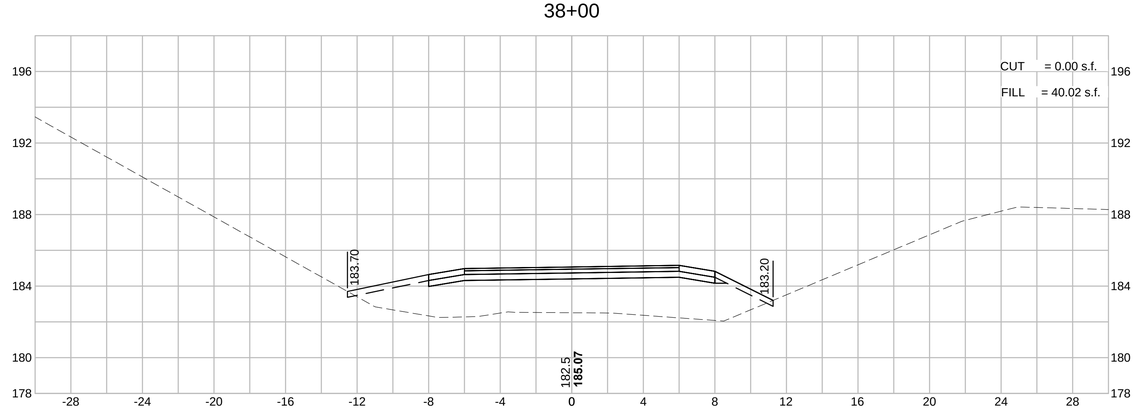

604531_HD(XS).DWG Plotted on 8-Oct-2015 2:09 PM

MAYNARD & ACTON
ASSABET RIVER RAIL TRAIL

STATE	FED. AID PROJ. NO.	SHEET NO.	TOTAL SHEETS
MA	CMAQ/STP-TE-002S(836)	172	230
PROJECT FILE NO.	604531		

HOR. SCALE IN FEET
4 0 4 8
4 0 4 8
VER. SCALE IN FEET

CROSS SECTIONS

34+50

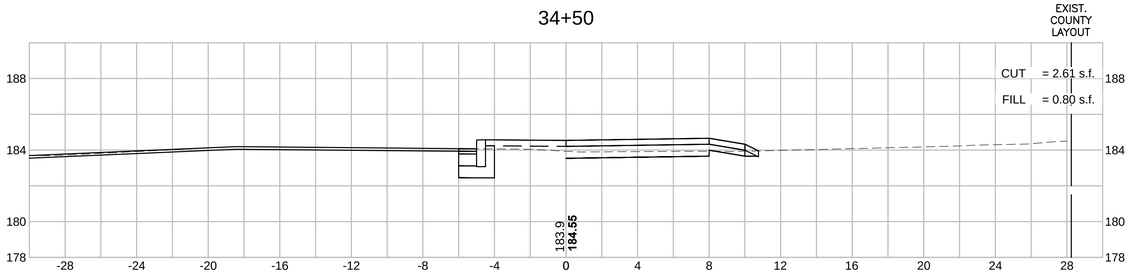

36+00

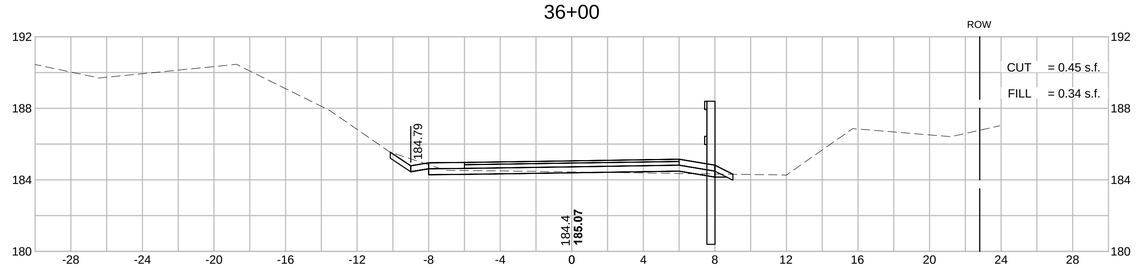

34+40

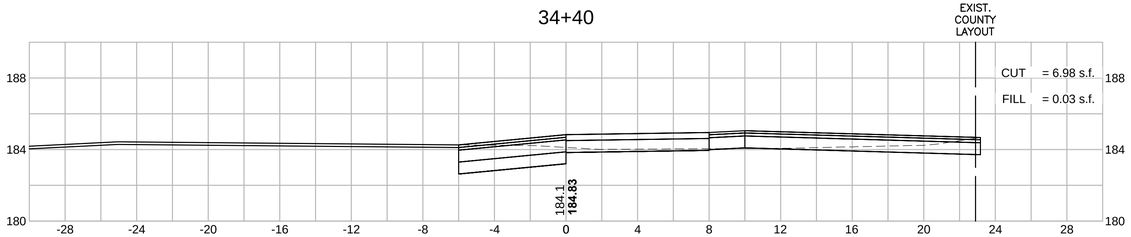

35+50

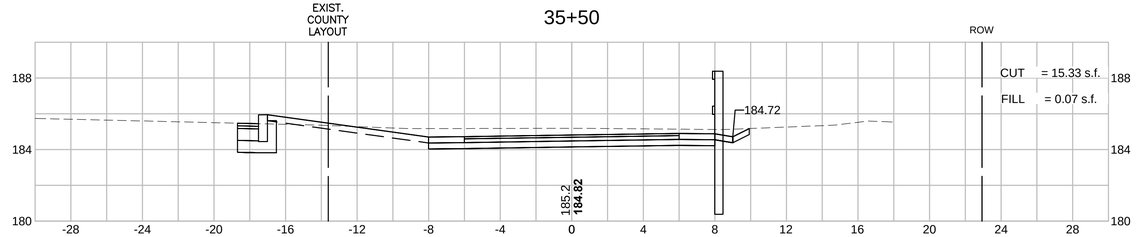

34+00

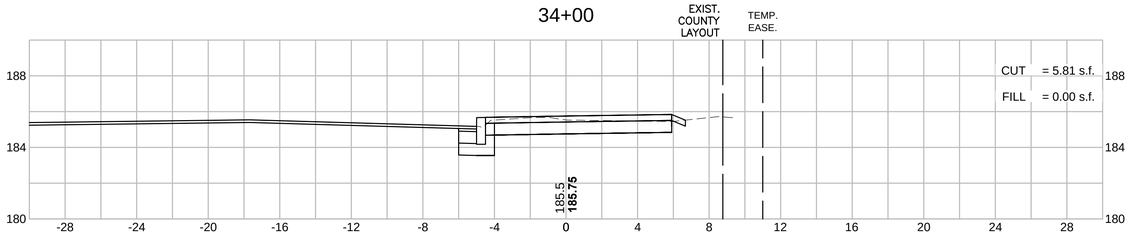

35+36

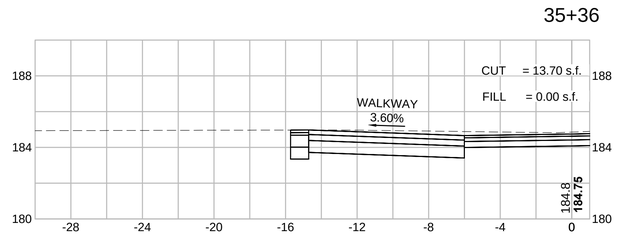

33+50

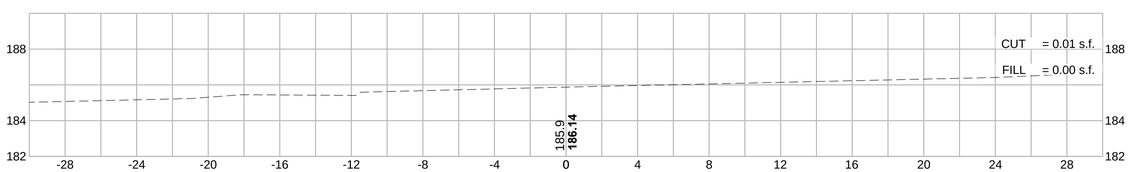

35+00

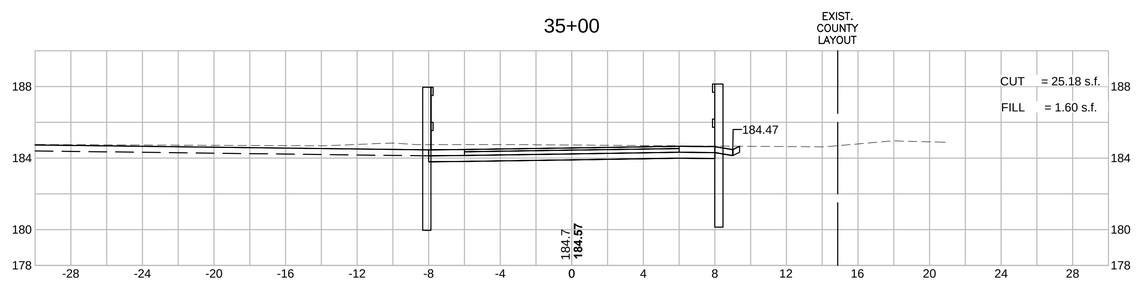

604531_HD(XS).DWG Plotted on 8-Oct-2015 2:08 PM

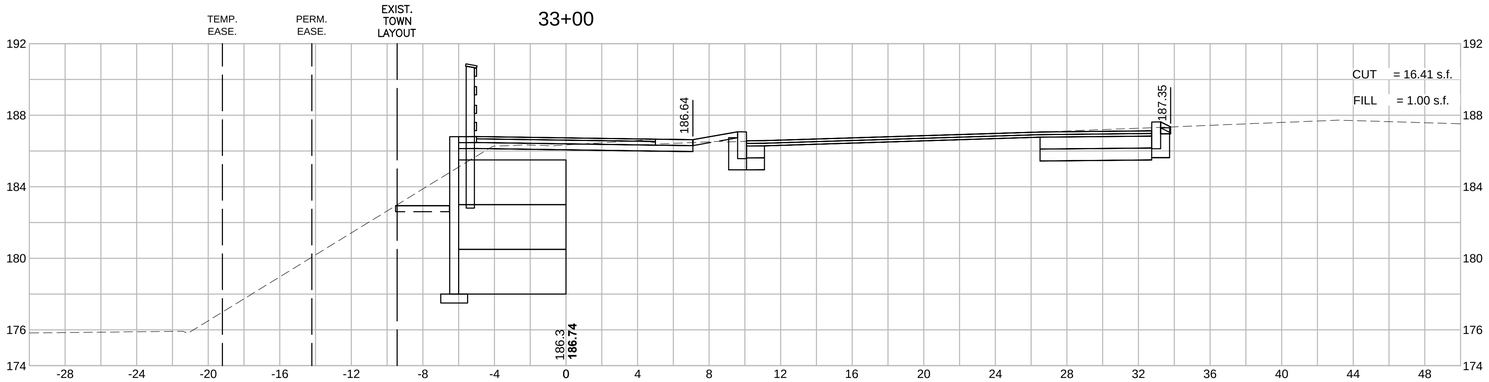

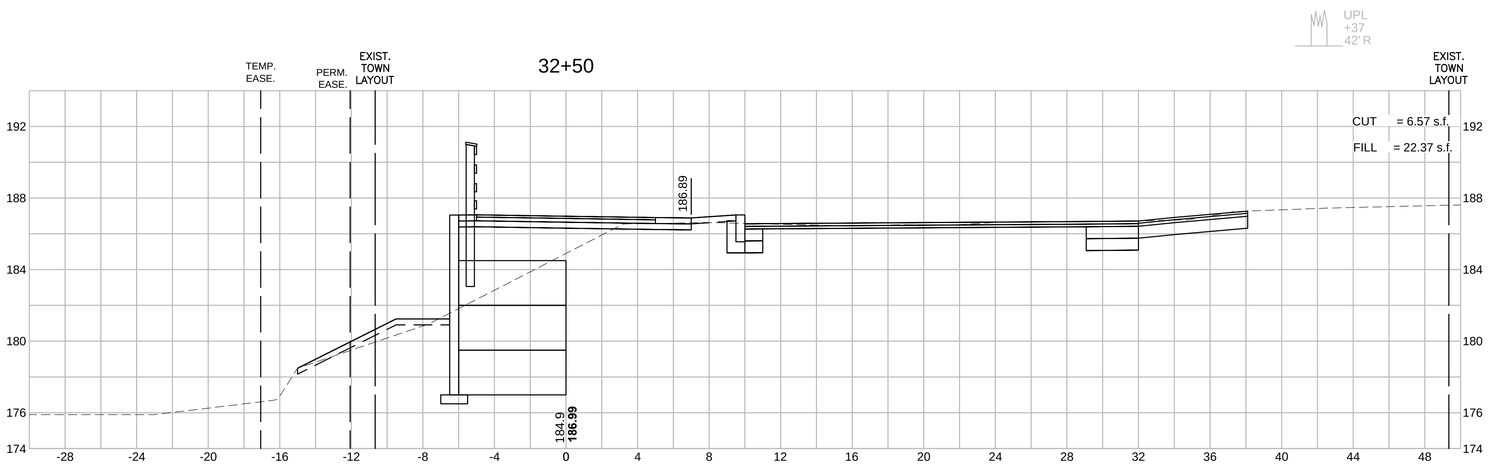

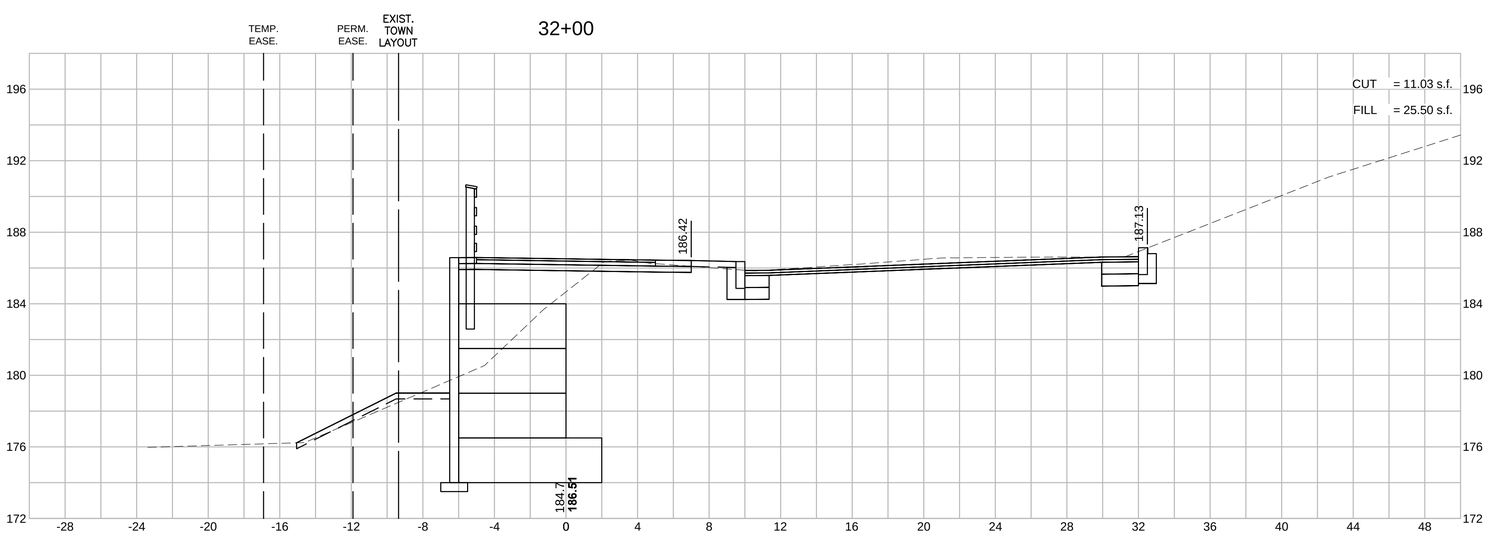

HOR. SCALE IN FEET

4 0 4 8

4 0 4 8

VER. SCALE IN FEET

MAYNARD & ACTON
ASSABET RIVER RAIL TRAIL

STATE	FED. AID PROJ. NO.	SHEET NO.	TOTAL SHEETS
MA	CMAQ/STP-TE-002S(836)	171	230
PROJECT FILE NO.	604531		

CROSS SECTIONS

604531_HD(XS).DWG Plotted on 8-Oct-2015 2:08 PM

MAYNARD & ACTON
ASSABET RIVER RAIL TRAIL

HOR. SCALE IN FEET
4 0 4 8
4 0 4 8
VER. SCALE IN FEET

STATE	FED. AID PROJ. NO.	SHEET NO.	TOTAL SHEETS
MA	CMAQ/STP-TE-002S(836)	170	230
PROJECT FILE NO.	604531		

CROSS SECTIONS

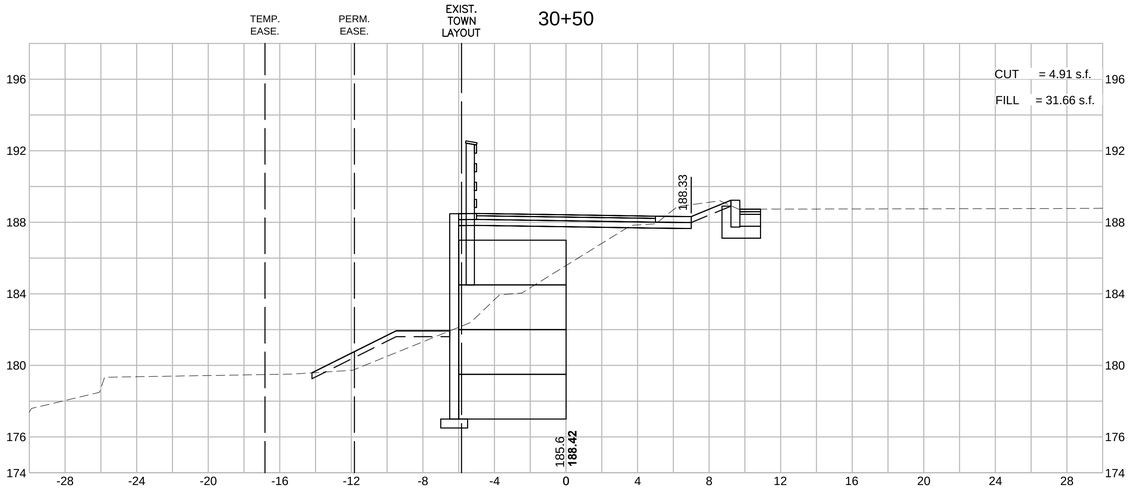

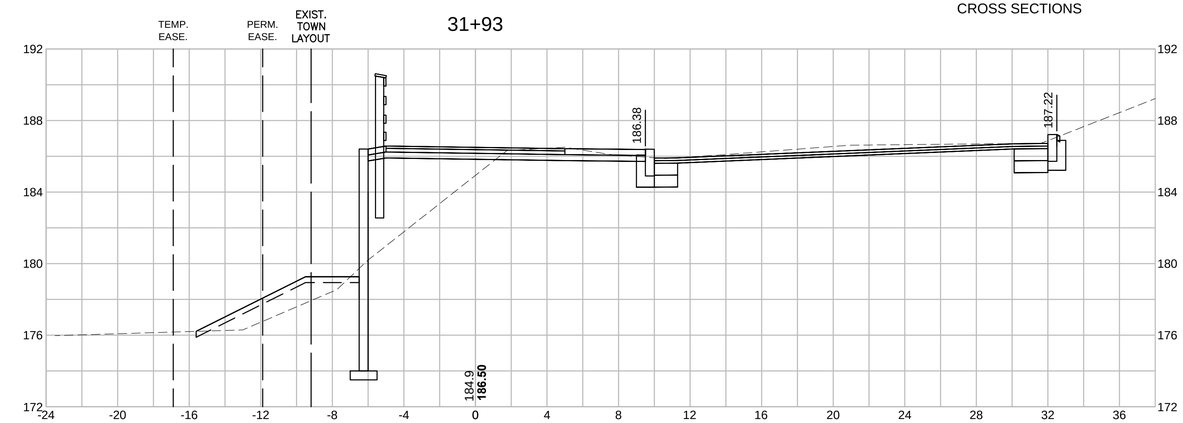

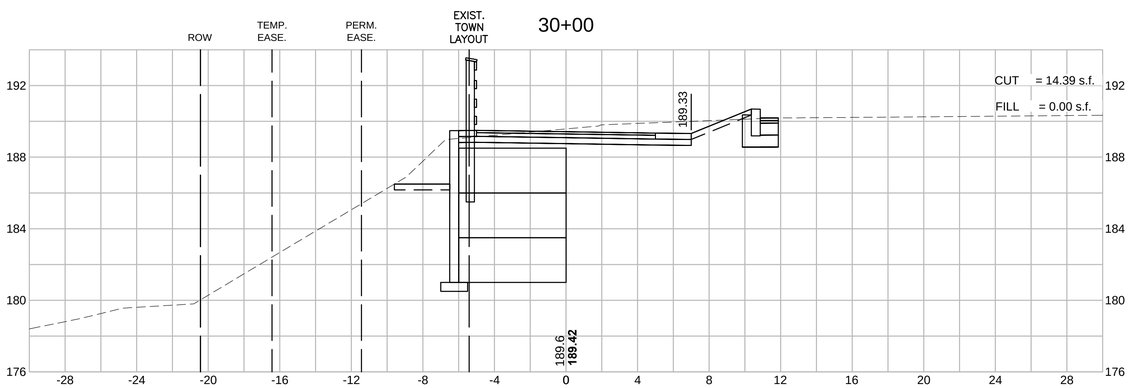

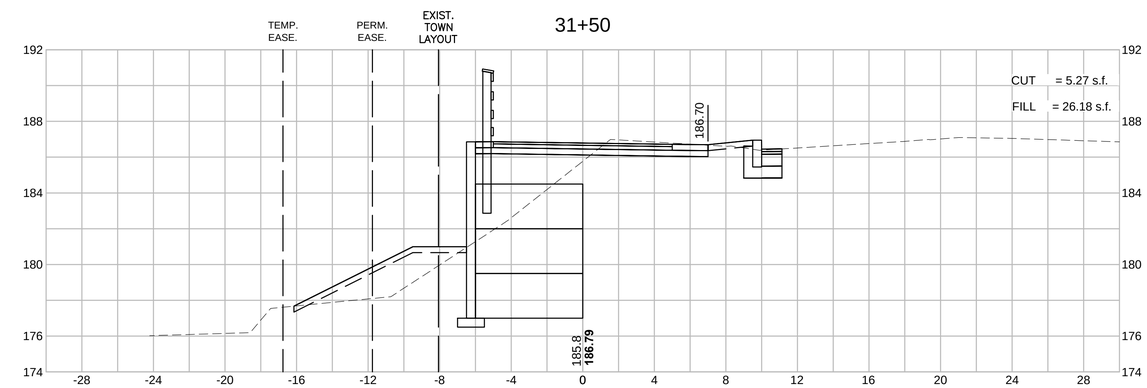

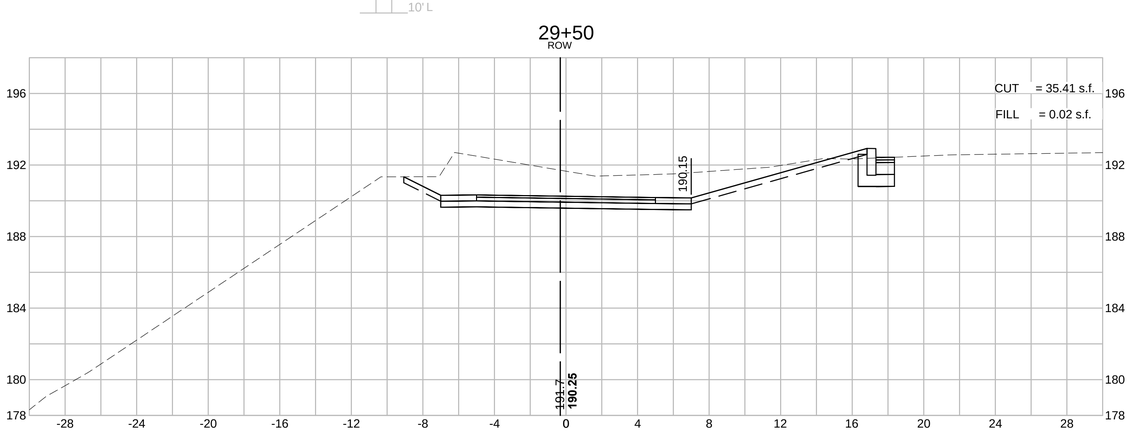

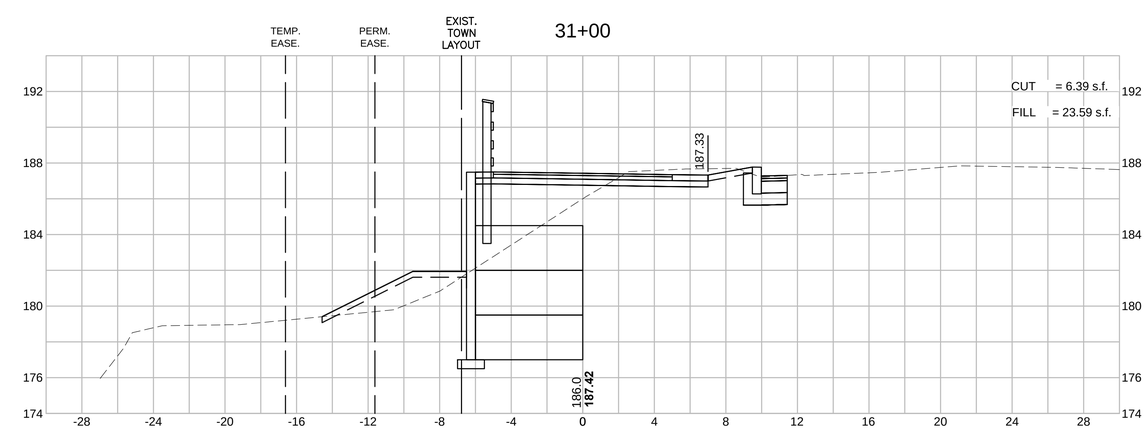

604531_HD(XS).DWG Plotted on 8-Oct-2015 2:07 PM

MAYNARD & ACTON
ASSABET RIVER RAIL TRAIL

HOR. SCALE IN FEET
4 0 4 8
4 0 4 8
VER. SCALE IN FEET

STATE	FED. AID PROJ. NO.	SHEET NO.	TOTAL SHEETS
MA	CMAQ/STP-TE-002S(836)	169	230
PROJECT FILE NO.	604531		

CROSS SECTIONS

27+50

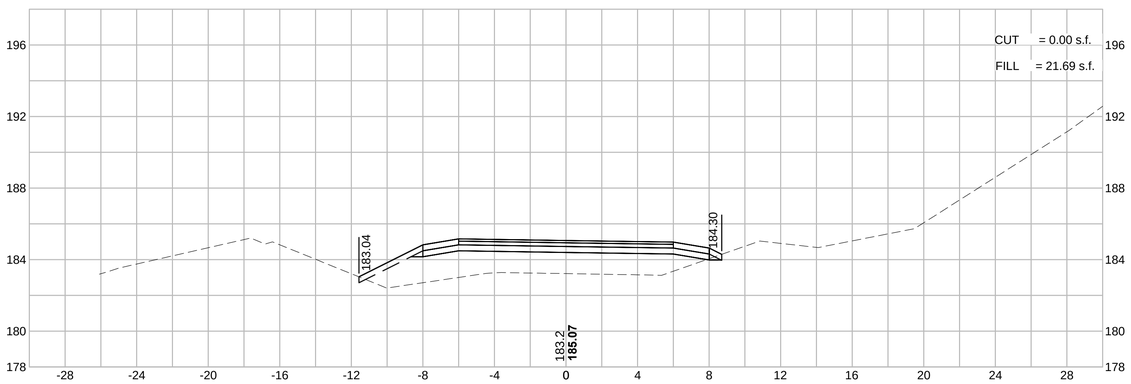

29+00

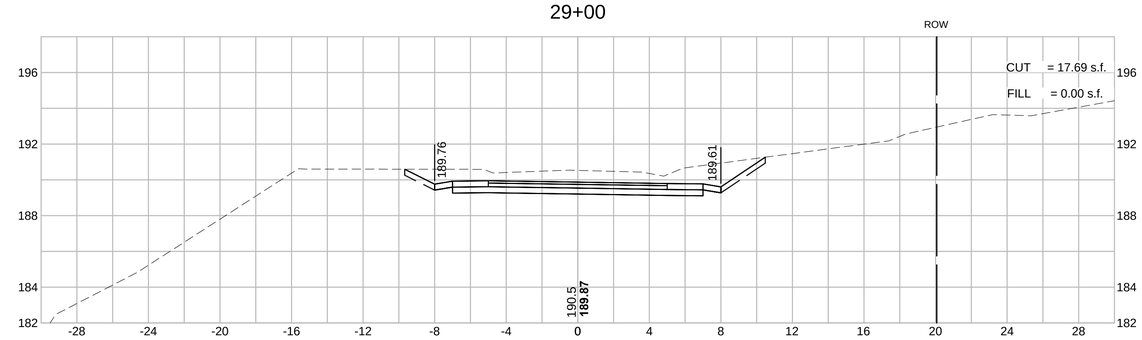

27+00

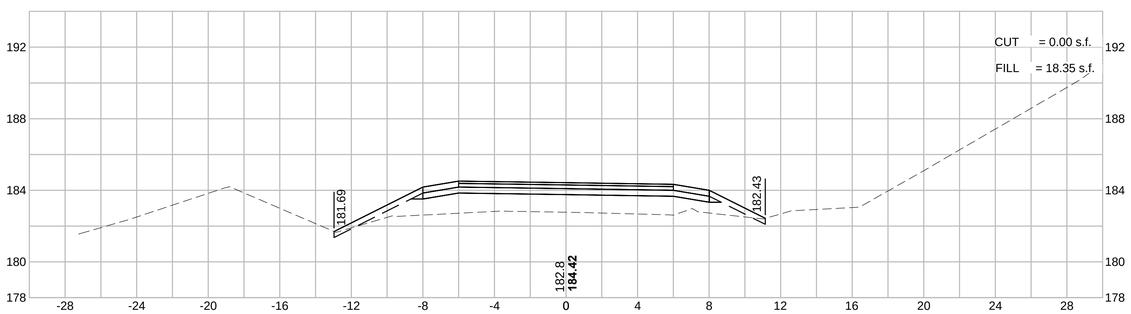

28+50

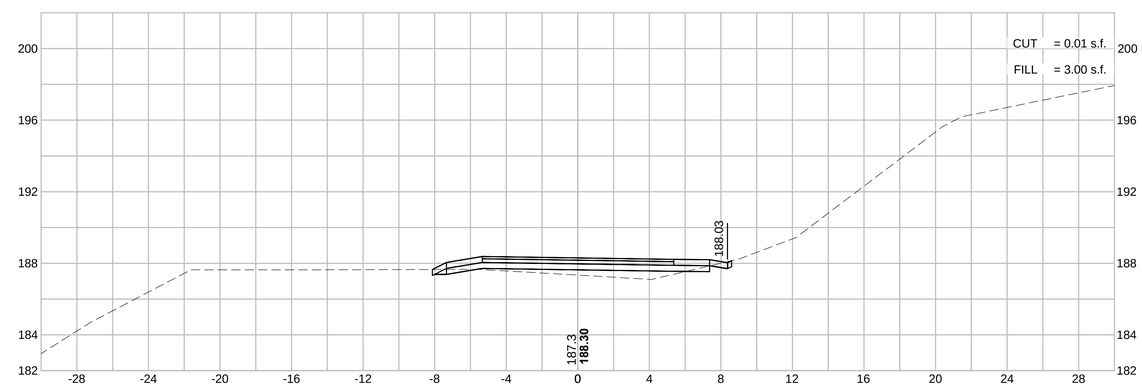

26+50

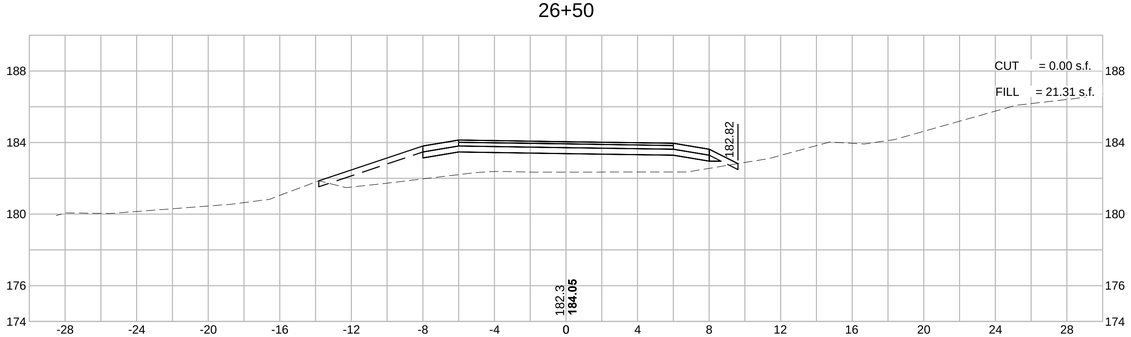

28+00

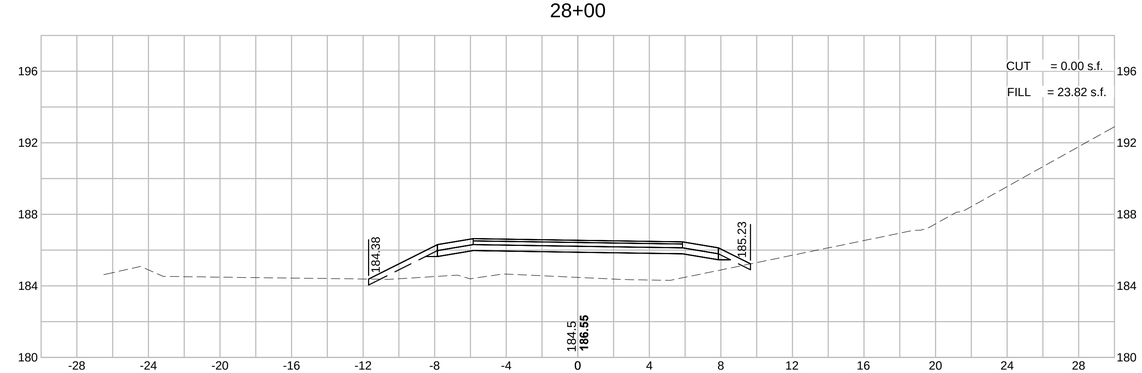

604531_HD(XS).DWG Plotted on 8-Oct-2015 2:07 PM

MAYNARD & ACTON
ASSABET RIVER RAIL TRAIL

STATE	FED. AID PROJ. NO.	SHEET NO.	TOTAL SHEETS
MA	CMAQ/STP-TE-002S(836)	168	230
PROJECT FILE NO.	604531		

CROSS SECTIONS

HOR. SCALE IN FEET
4 0 4 8
4 0 4 8
VER. SCALE IN FEET

24+50

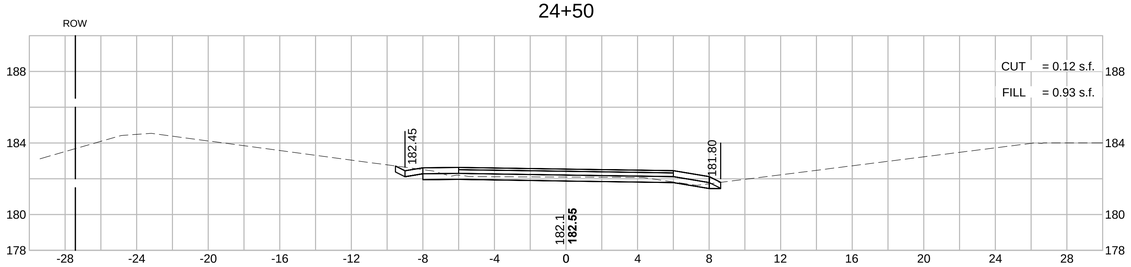

24+00

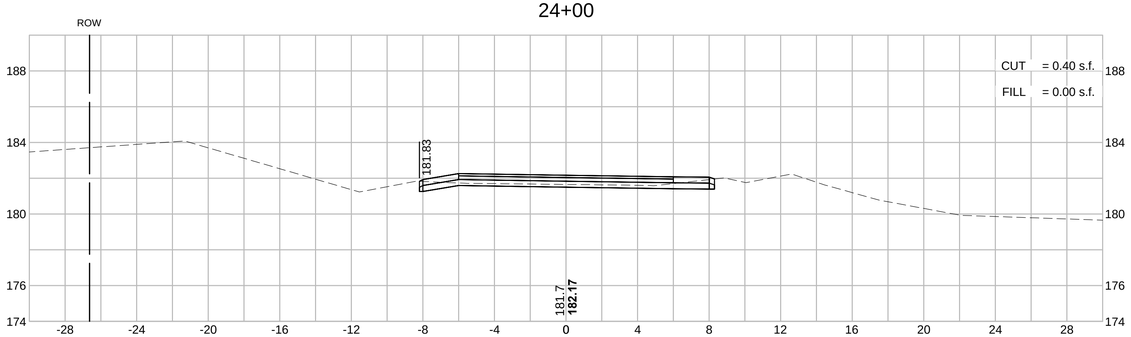

26+00

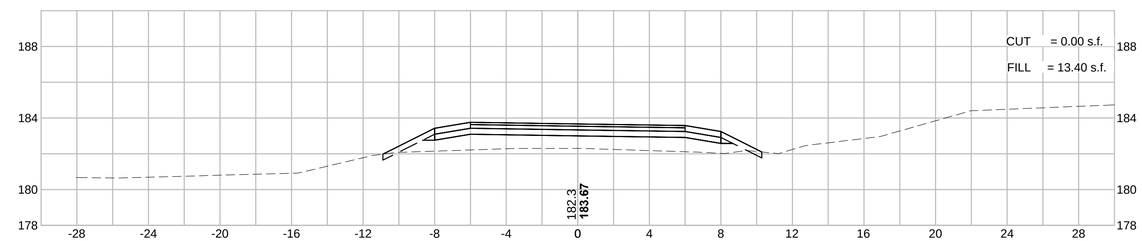

23+50

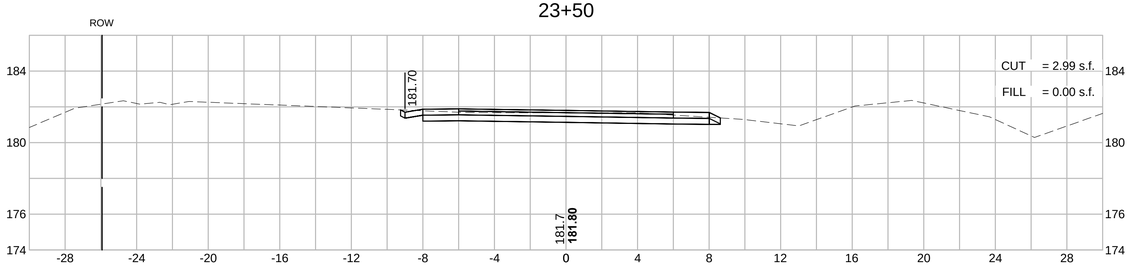

25+50

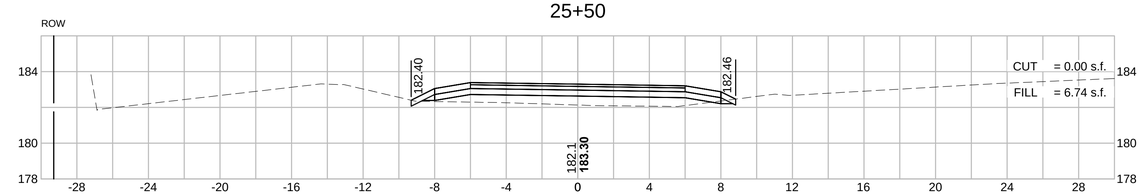

23+00

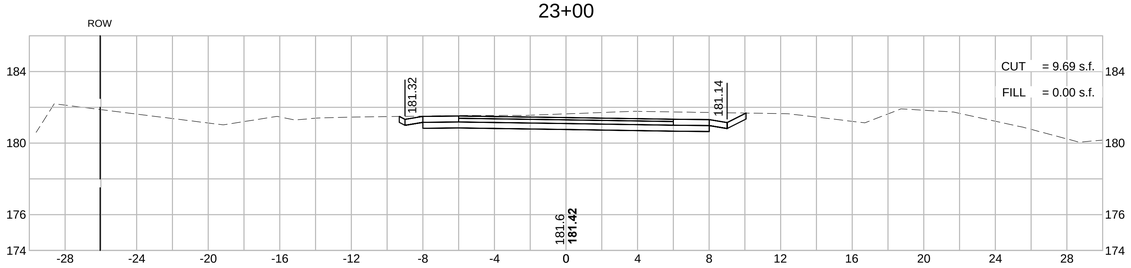

25+00

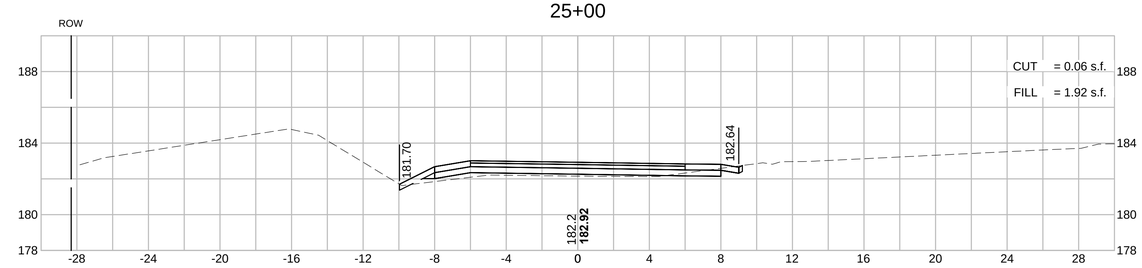

604531_HD(XS).DWG Plotted on 8-Oct-2015 2:06 PM

MAYNARD & ACTON
ASSABET RIVER RAIL TRAIL

HOR. SCALE IN FEET
4 0 4 8
4 0 4 8
VER. SCALE IN FEET

STATE	FED. AID PROJ. NO.	SHEET NO.	TOTAL SHEETS
MA	CMAQ/STP-TE-002S(836)	167	230
PROJECT FILE NO.	604531		

CROSS SECTIONS

20+50

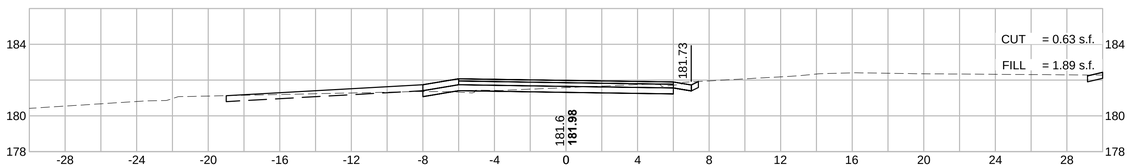

22+50

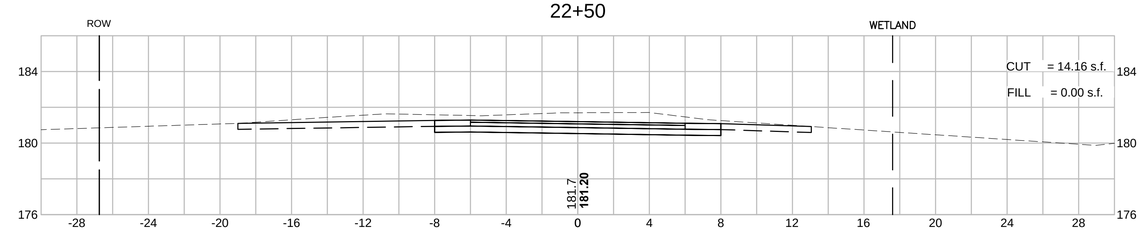

20+40

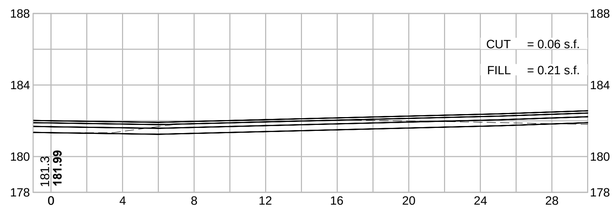

22+00

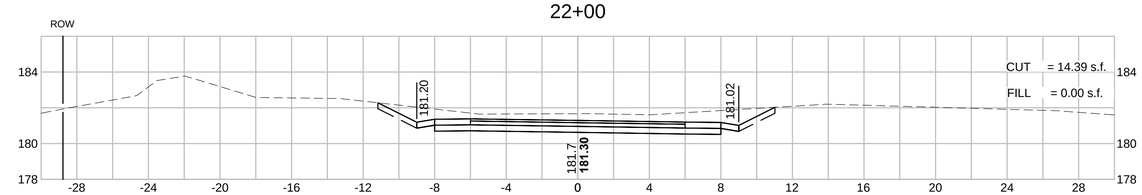

20+00

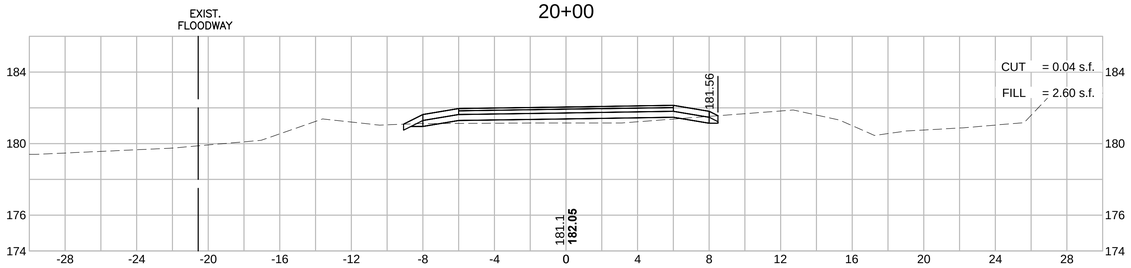

21+50

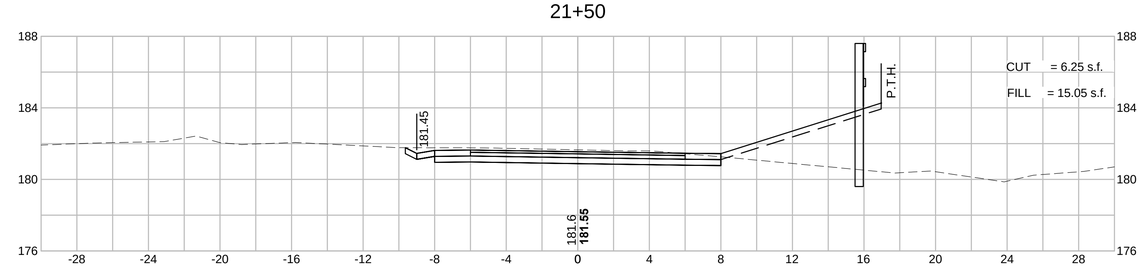

19+50

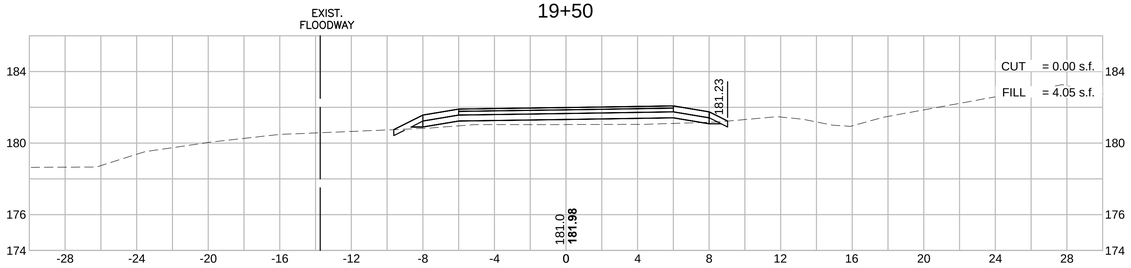

21+00

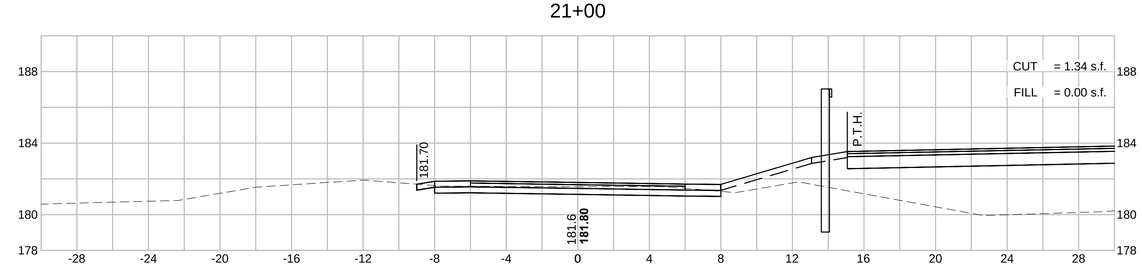

604531_HD(XS).DWG Plotted on 8-Oct-2015 2:05 PM

MAYNARD & ACTON
ASSABET RIVER RAIL TRAIL

HOR. SCALE IN FEET
4 0 4 8
4 0 4 8
VER. SCALE IN FEET

STATE	FED. AID PROJ. NO.	SHEET NO.	TOTAL SHEETS
MA	CMAQ/STP-TE-002S(836)	166	230
PROJECT FILE NO.	604531		

CROSS SECTIONS

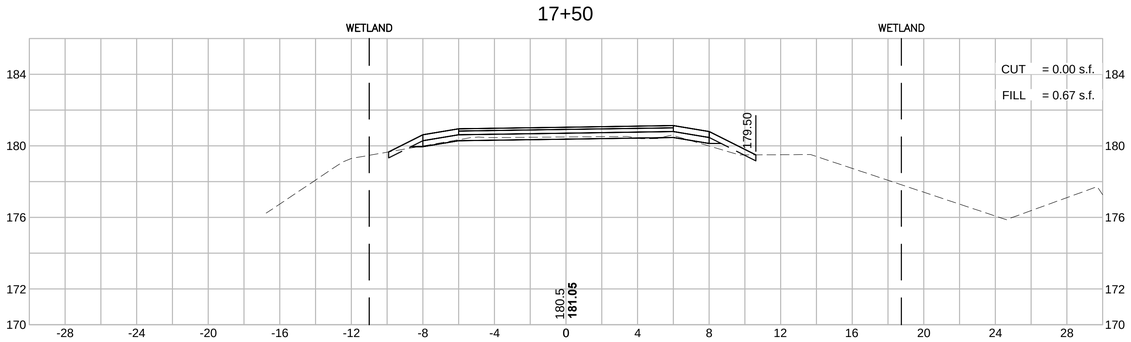

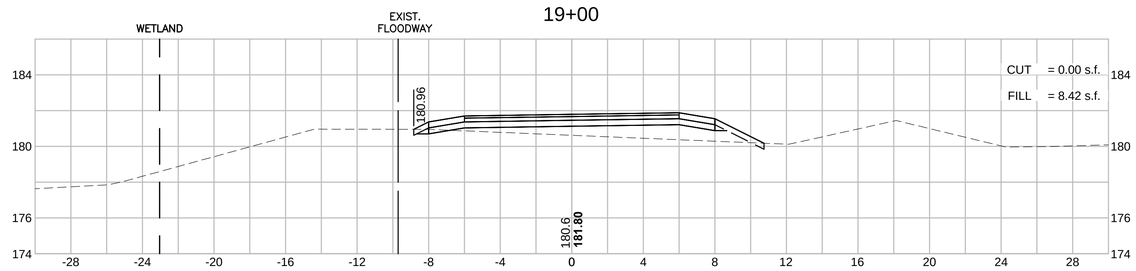

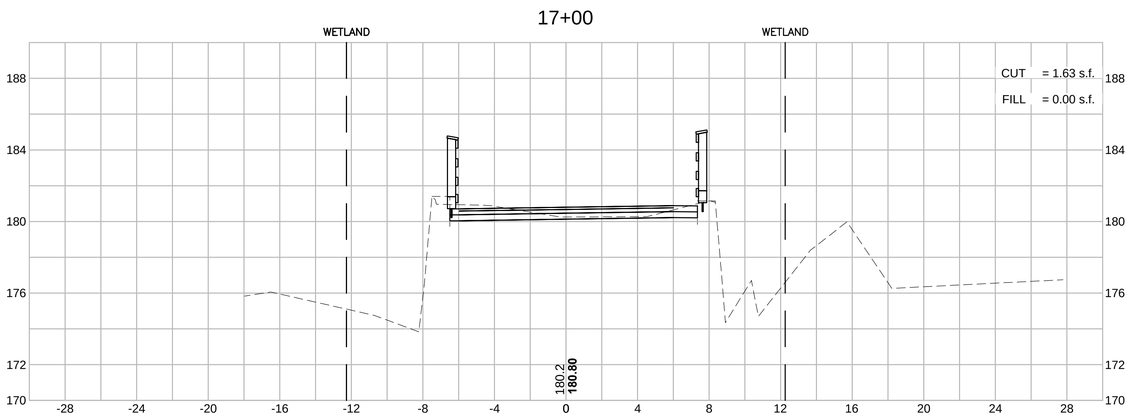

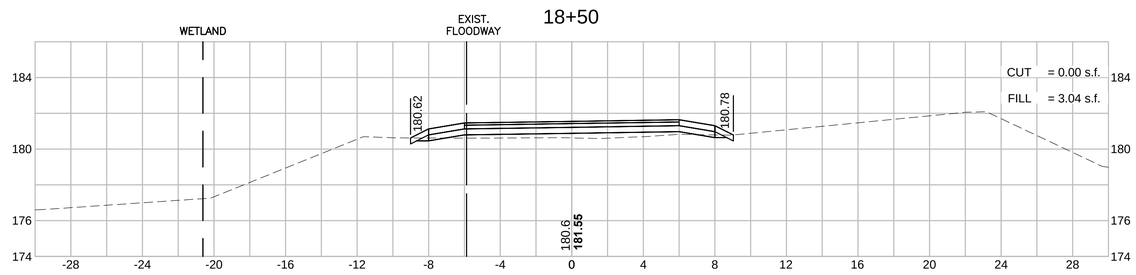

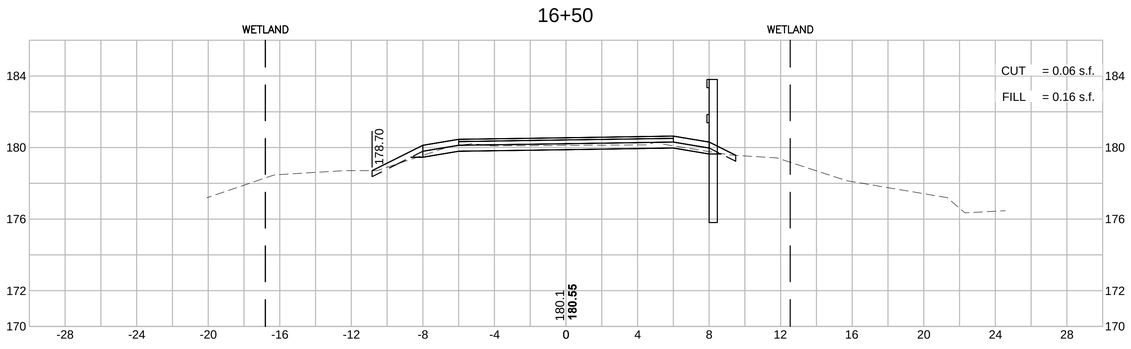

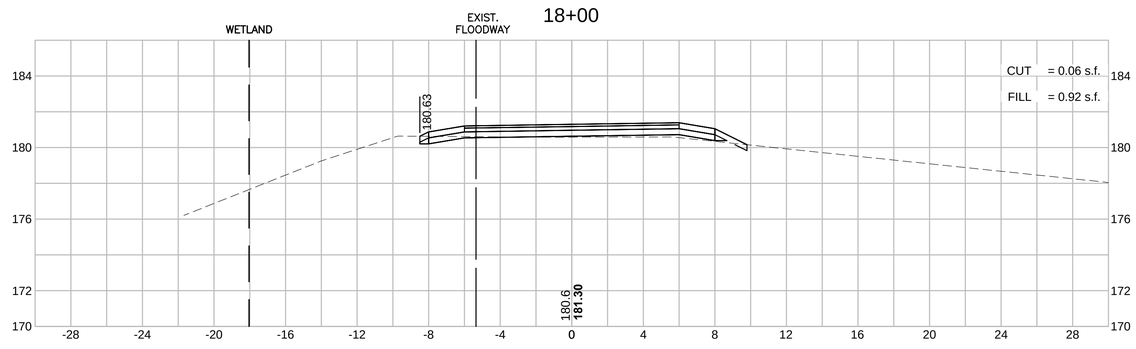

604531_HD(XS).DWG Plotted on 8-Oct-2015 2:05 PM

HOR. SCALE IN FEET
4 0 4 8
4 0 4 8
VER. SCALE IN FEET

MAYNARD & ACTON
ASSABET RIVER RAIL TRAIL

STATE	FED. AID PROJ. NO.	SHEET NO.	TOTAL SHEETS
MA	CMAQ/STP-TE-002S(836)	165	230
PROJECT FILE NO.	604531		

CROSS SECTIONS

604531_HD(XS).DWG Plotted on 8-Oct-2015 2:04 PM

14+50

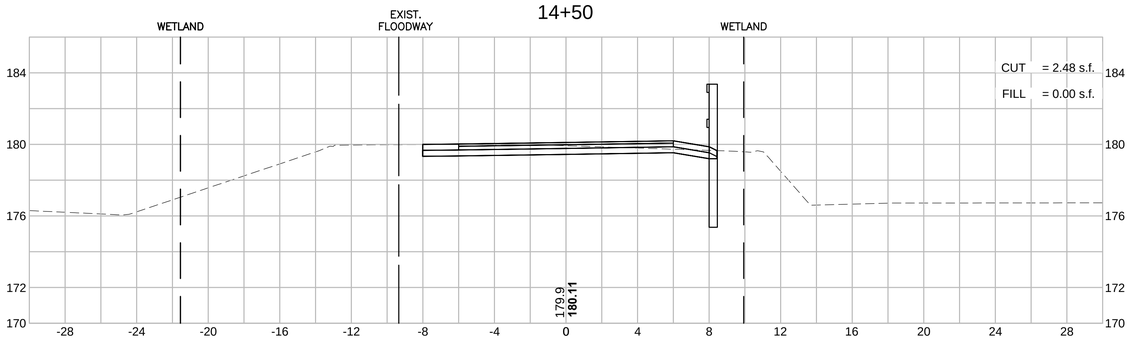

16+00

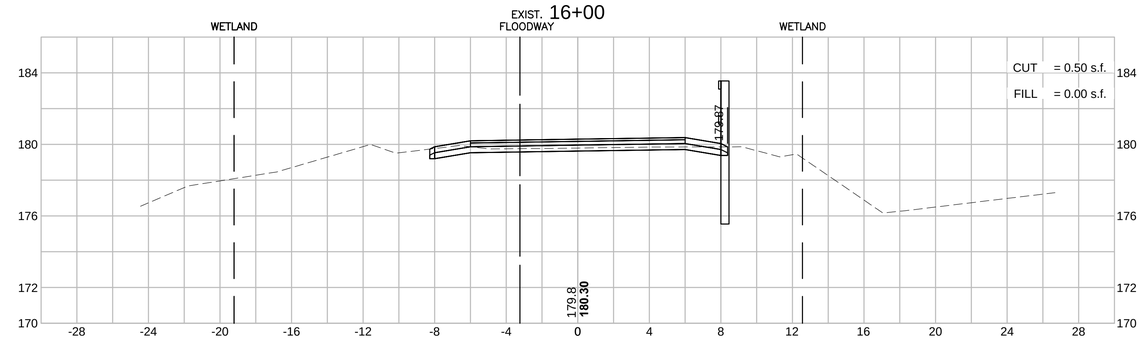

14+00

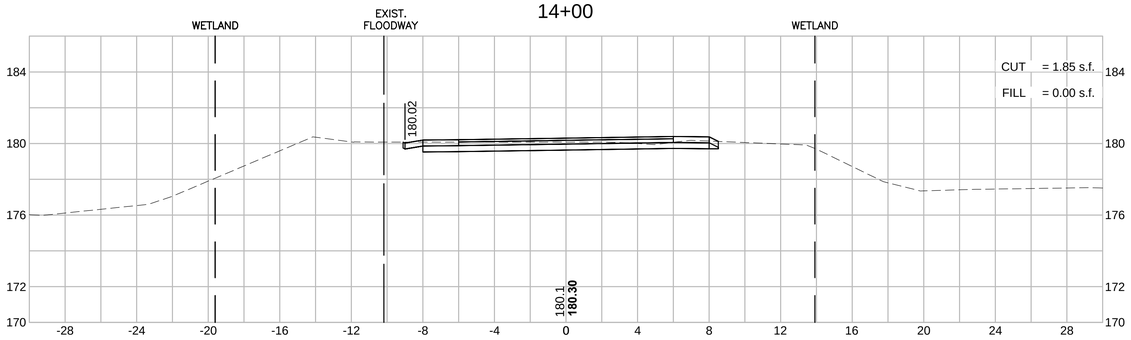

15+50

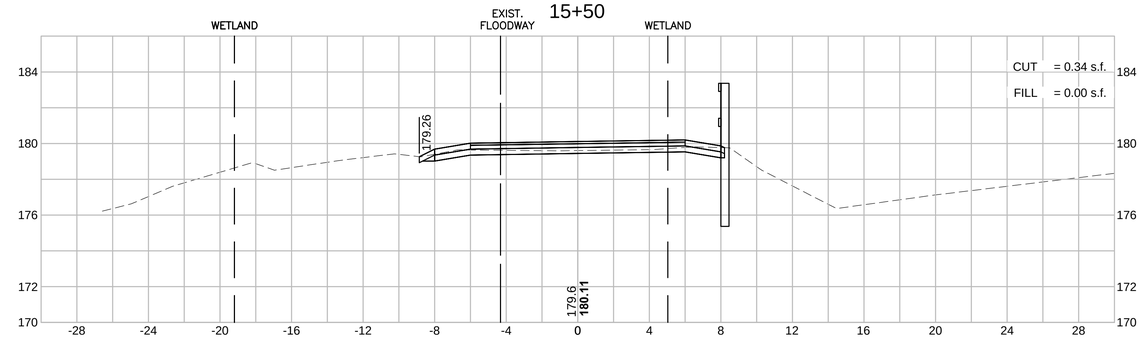

13+50

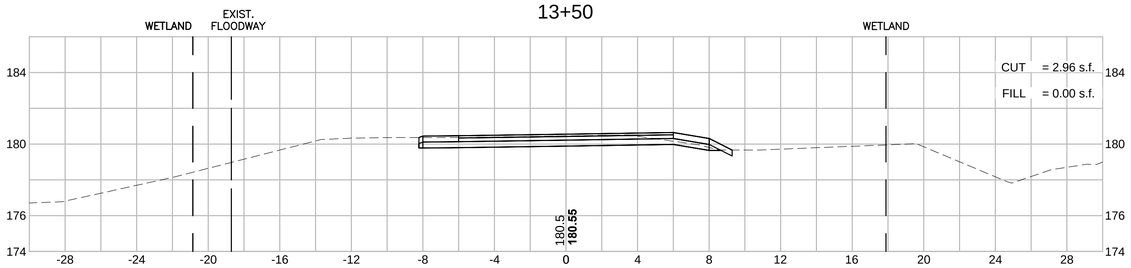

15+00

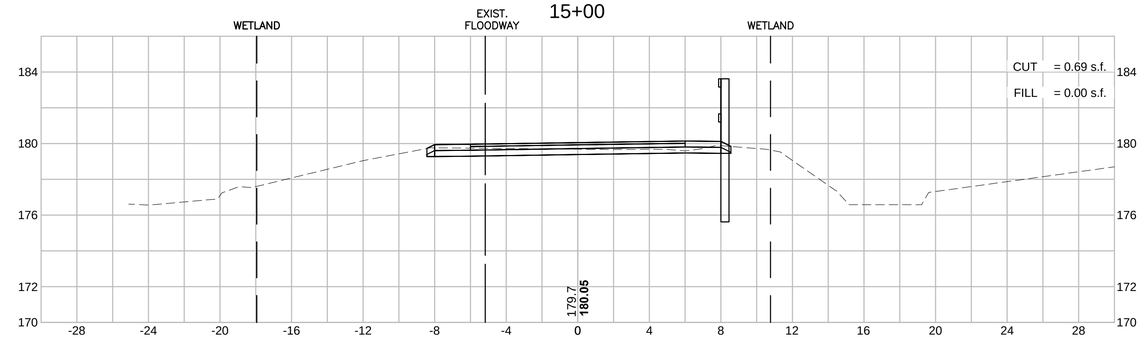

HOR. SCALE IN FEET
4 0 4 8
4 0 4 8
VER. SCALE IN FEET

MAYNARD & ACTON
ASSABET RIVER RAIL TRAIL

STATE	FED. AID PROJ. NO.	SHEET NO.	TOTAL SHEETS
MA	CMAQ/STP-TE-002S(836)	164	230
PROJECT FILE NO.	604531		

CROSS SECTIONS

604531_HD(XS).DWG Plotted on 8-Oct-2015 2:04 PM

11+50

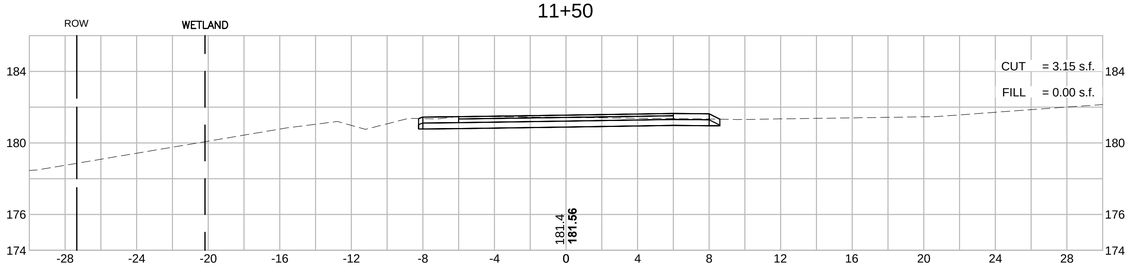

13+00

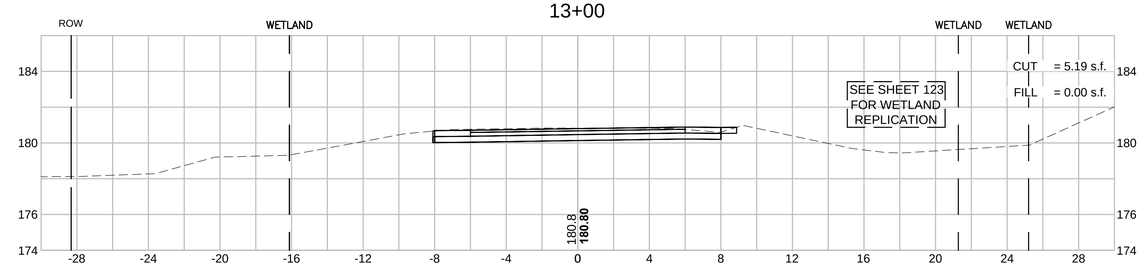

11+00

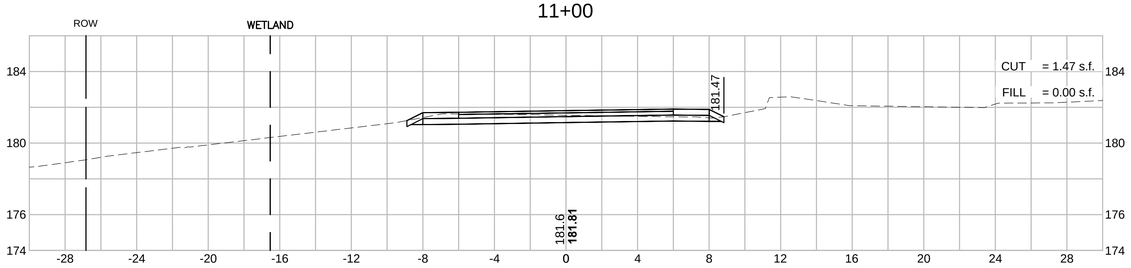

12+50

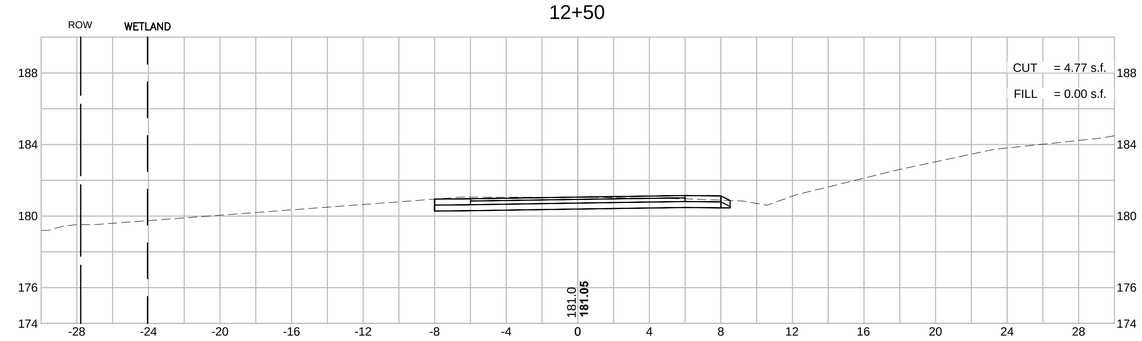

10+82

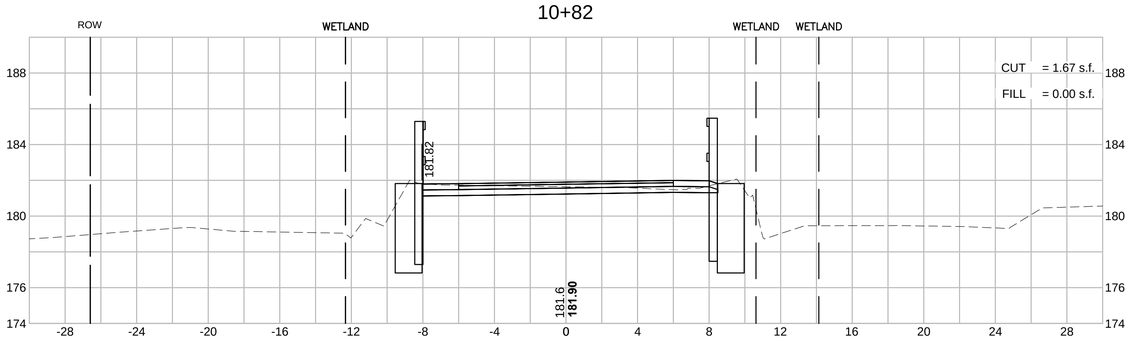

12+00

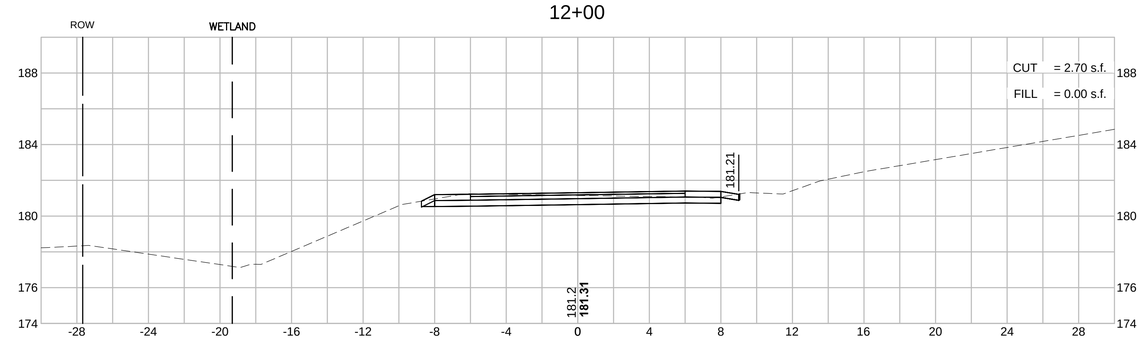

MAYNARD & ACTON
ASSABET RIVER RAIL TRAIL

HOR. SCALE IN FEET
4 0 4 8
4 0 4 8
VER. SCALE IN FEET

STATE	FED. AID PROJ. NO.	SHEET NO.	TOTAL SHEETS
MA	CMAQ/STP-TE-002S(836)	163	230
PROJECT FILE NO.	604531		

CROSS SECTIONS

8+50

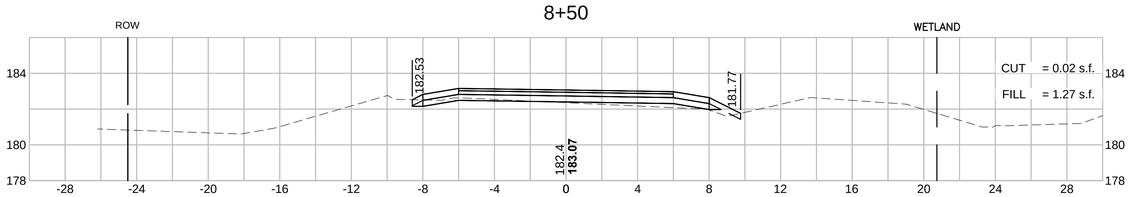

10+50

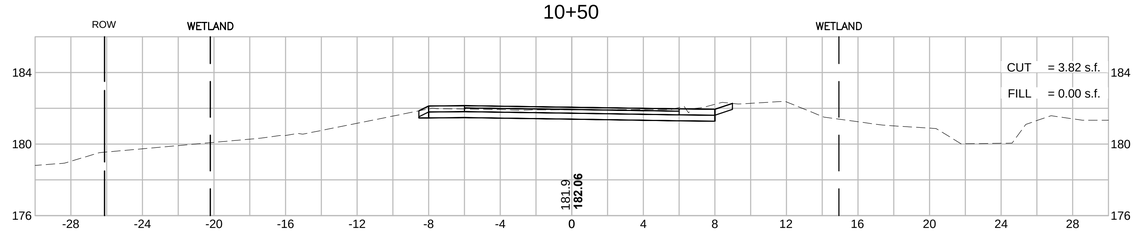

8+00

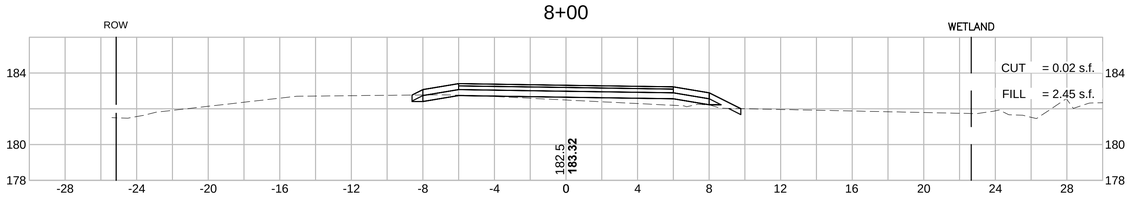

10+00

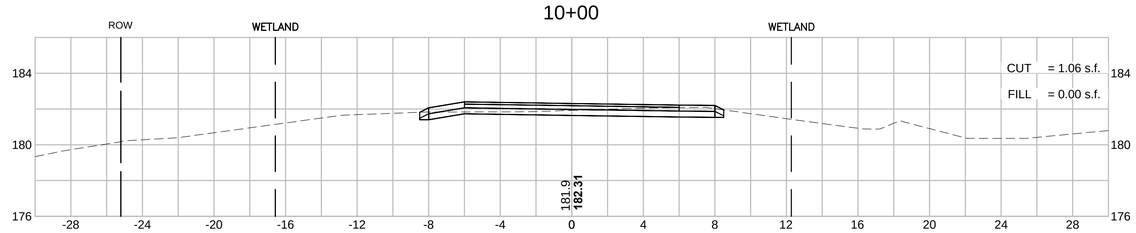

7+50

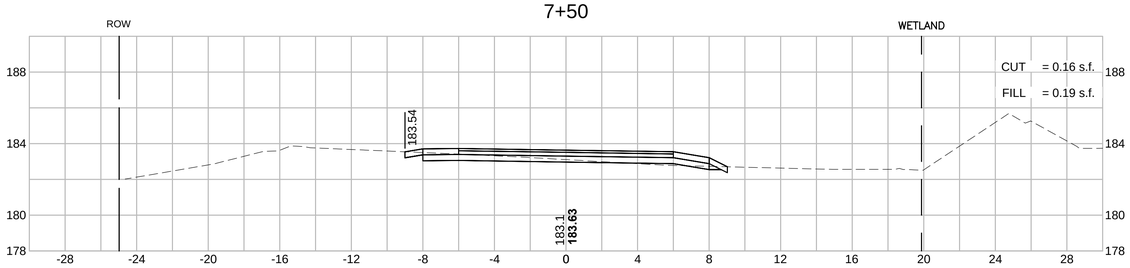

9+50

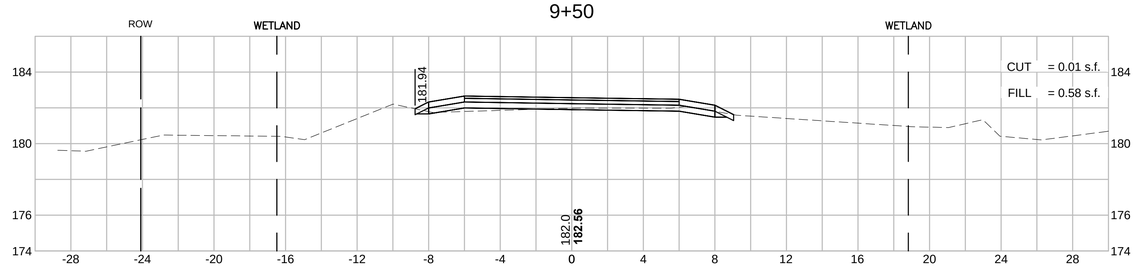

7+00

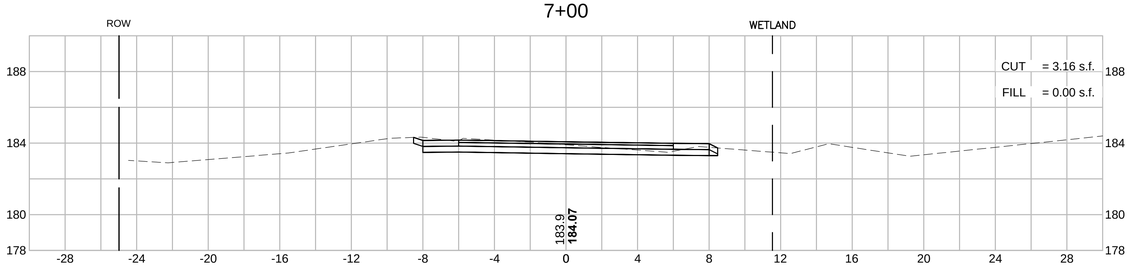

9+00

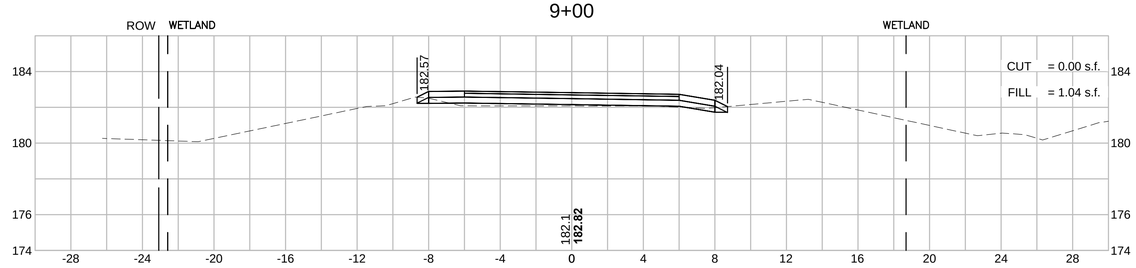

604531_HD(XS).DWG Plotted on 8-Oct-2015 2:03 PM

MAYNARD & ACTON
ASSABET RIVER RAIL TRAIL

HOR. SCALE IN FEET
4 0 4 8
4 0 4 8
VER. SCALE IN FEET

STATE	FED. AID PROJ. NO.	SHEET NO.	TOTAL SHEETS
MA	CMAQ/STP-TE-002S(836)	162	230
PROJECT FILE NO.	604531		

CROSS SECTIONS

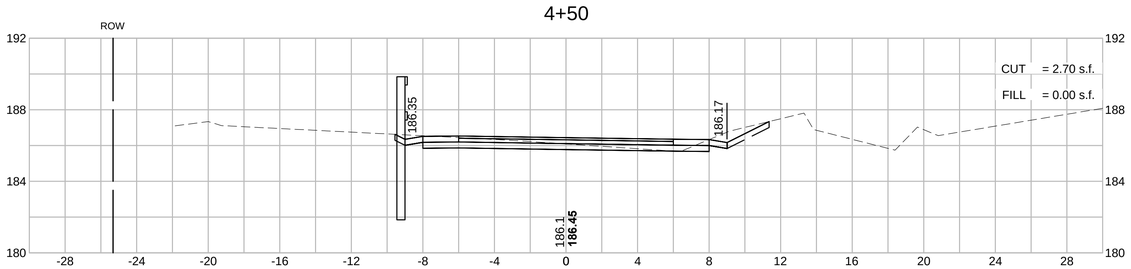

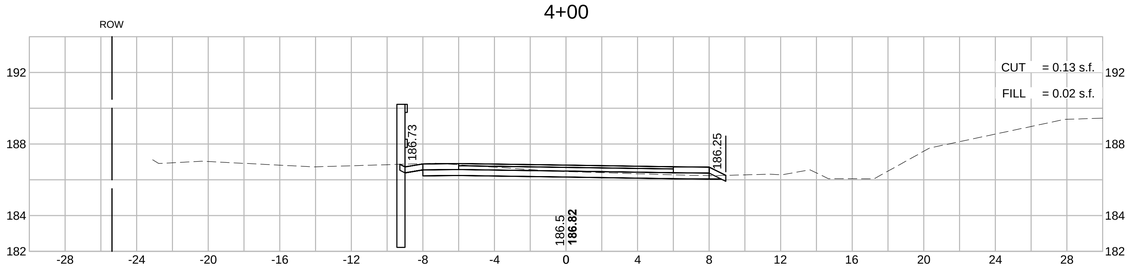

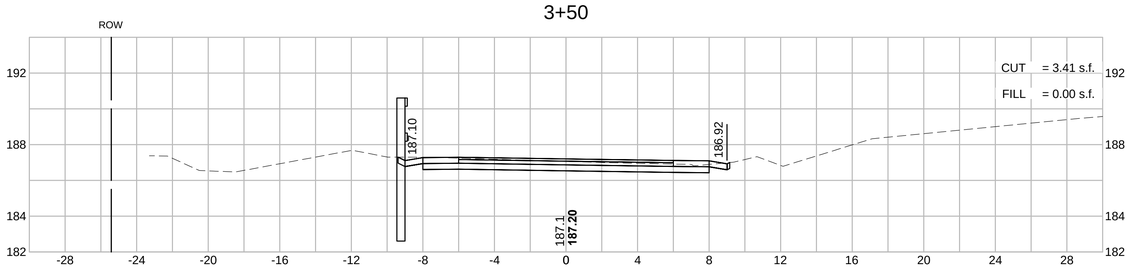

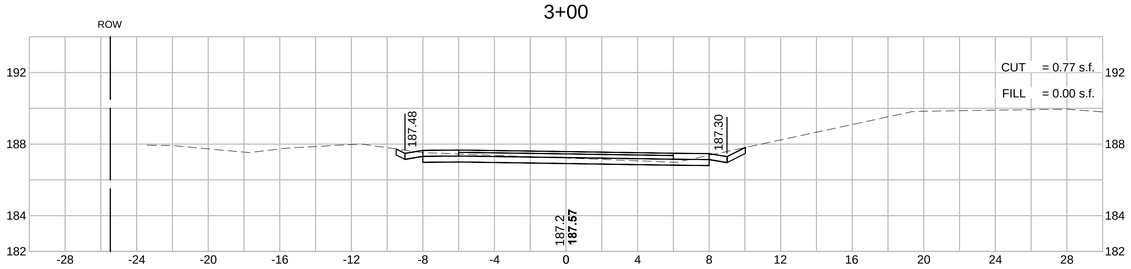

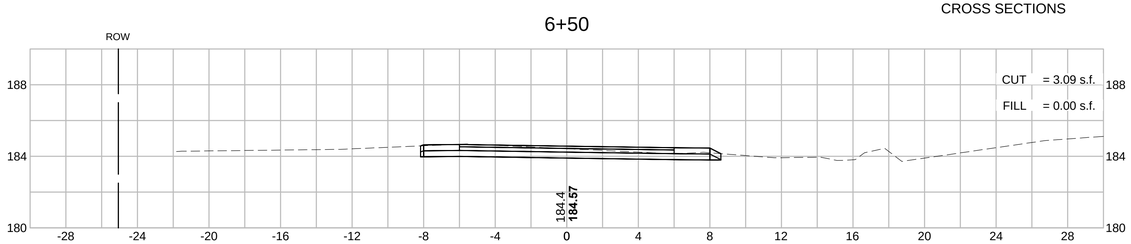

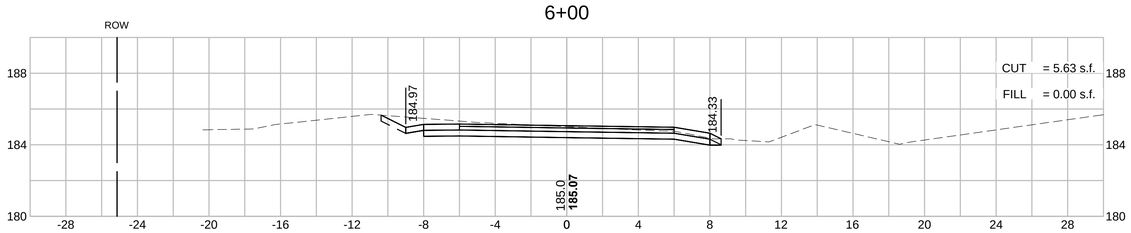

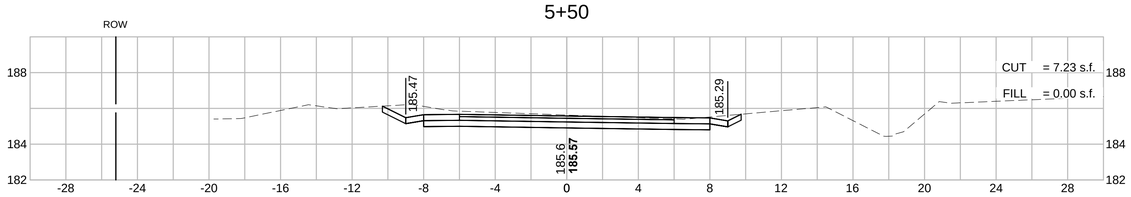

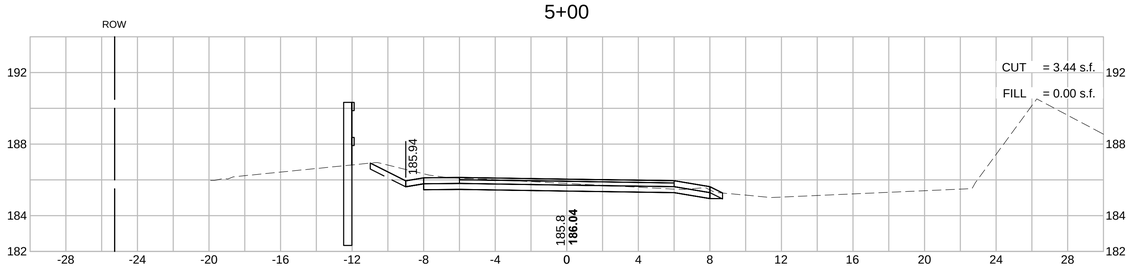

604531_HD(XS).DWG Plotted on 8-Oct-2015 2:02 PM

HOR. SCALE IN FEET
4 0 4 8
4 0 4 8
VER. SCALE IN FEET

MAYNARD & ACTON
ASSABET RIVER RAIL TRAIL

STATE	FED. AID PROJ. NO.	SHEET NO.	TOTAL SHEETS
MA	CMAQ/STP-TE-002S(836)	161	230
PROJECT FILE NO.	604531		

CROSS SECTIONS

604531_HD(XS).DWG Plotted on 8-Oct-2015 2:02 PM

1+00

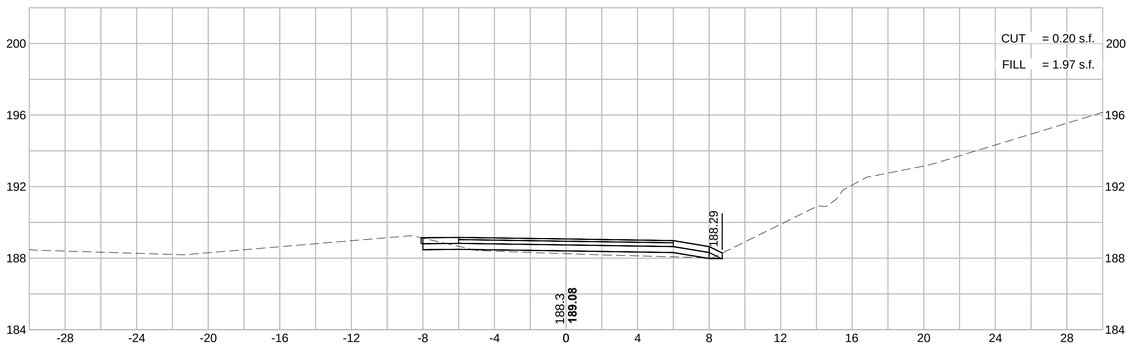

2+50

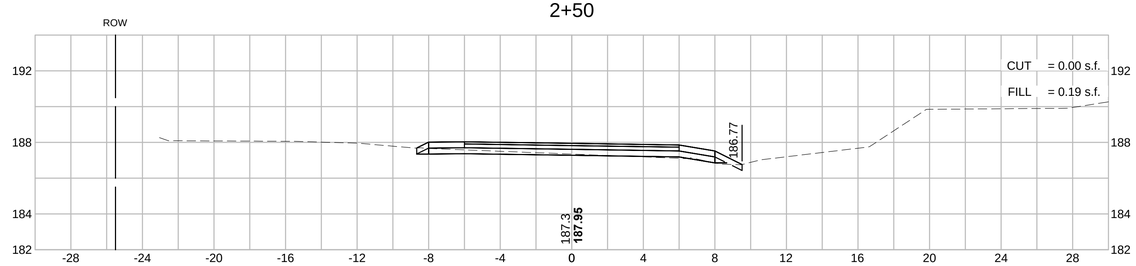

0+50

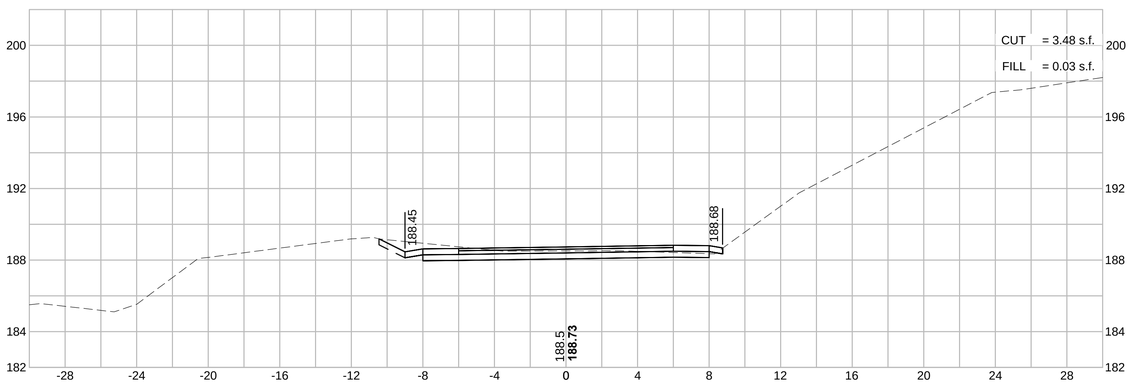

2+00

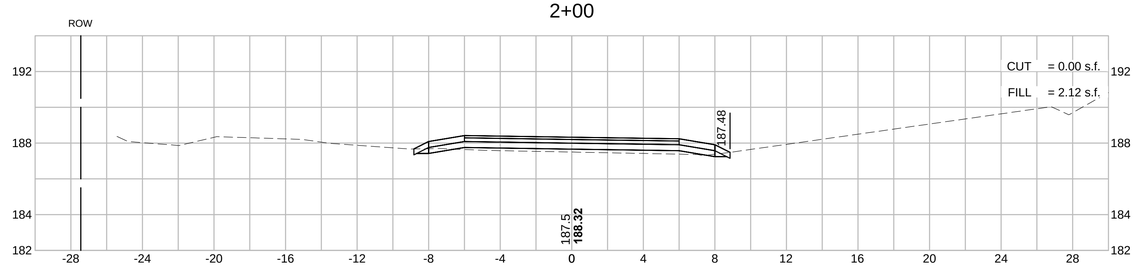

0+00

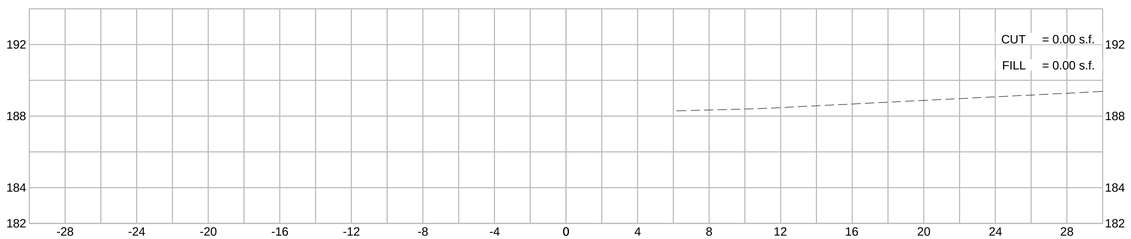

1+50

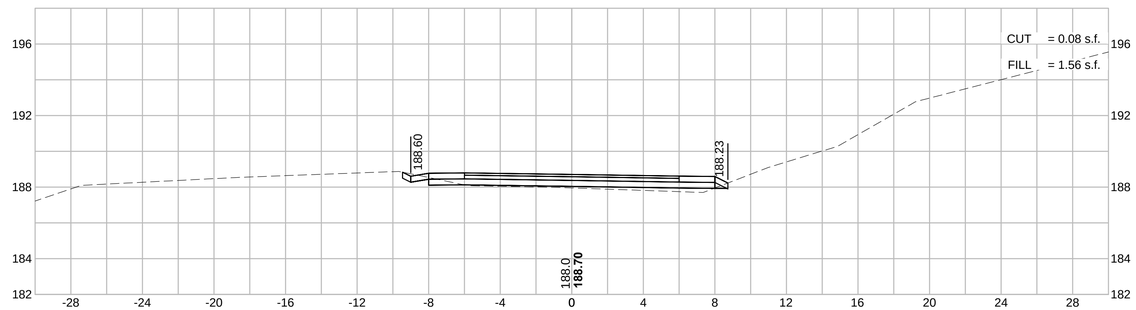

MAYNARD & ACTON
ASSABET RIVER RAIL TRAIL

STATE	FED. AID PROJ. NO.	SHEET NO.	TOTAL SHEETS
MA	CMAQ/STP-TE-002S(836)	160	230
PROJECT FILE NO. 604531			

APPROACH SLAB AND MISC. DETAILS

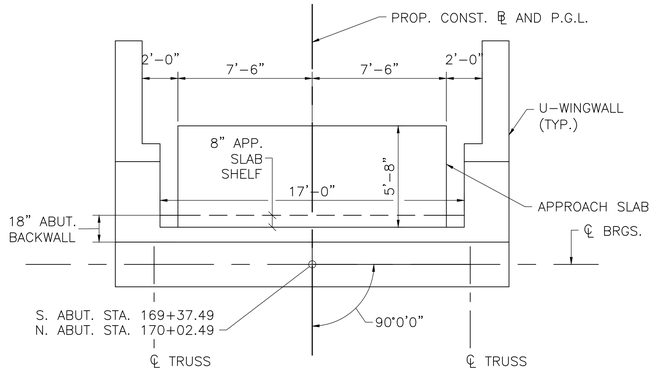

TYPICAL APPROACH SLAB PLAN
SCALE: $\frac{1}{4}$" = 1'-0"

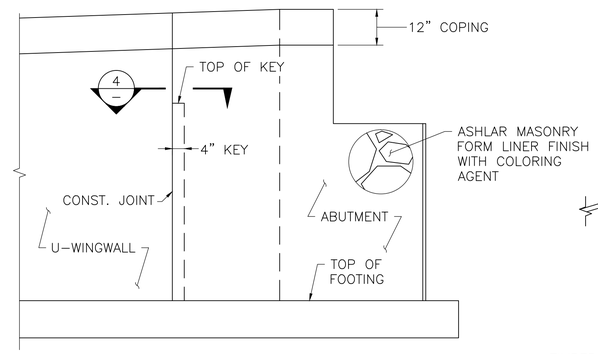

WINGWALL ELEVATION
SCALE: $\frac{1}{2}$" = 1'-0"

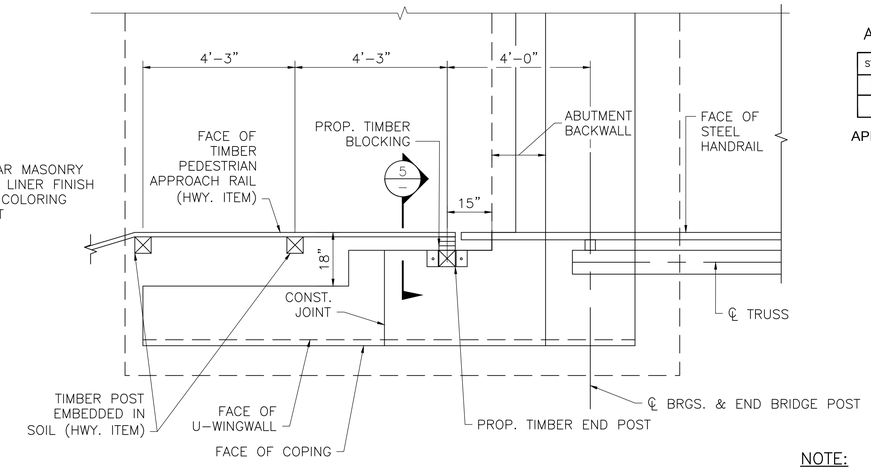

TYPICAL BRIDGE RAIL TRANSITION – PLAN
SCALE: $\frac{1}{2}$" = 1'-0"

NOTE:
NW & SE CORNERS SHOWN.
NE & SW SIMILAR.

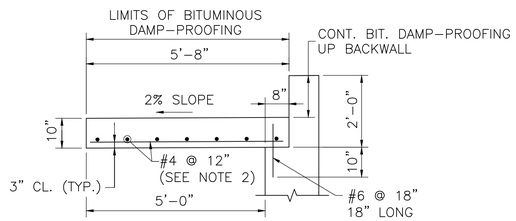

NOTES:

1. APPROACH SLAB TO BE 4000 PSI, $1\frac{1}{2}$ IN, 565 CEMENT CONCRETE.
2. PLACE LONGITUDINAL REINFORCEMENT PERPENDICULAR TO THE ABUTMENT.
3. PLACE TRANSVERSE REINFORCEMENT PARALLEL TO ABUTMENT.

TYPICAL APPROACH SLAB DETAILS
SCALE: $\frac{1}{2}$" = 1'-0"

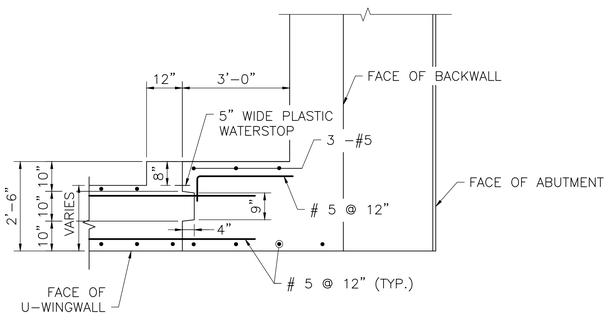

SECTION 4 – CONSTRUCTION JOINT
SCALE: $\frac{1}{2}$" = 1'-0"

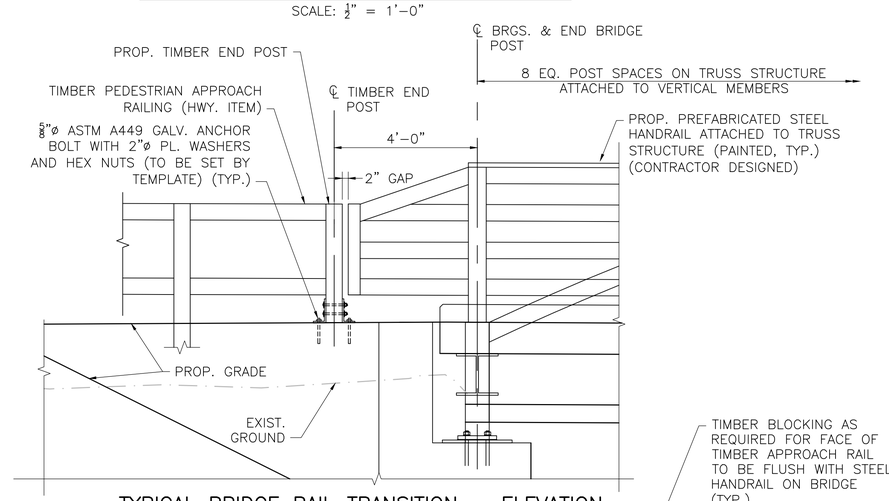

TYPICAL BRIDGE RAIL TRANSITION – ELEVATION
SCALE: $\frac{1}{2}$" = 1'-0"

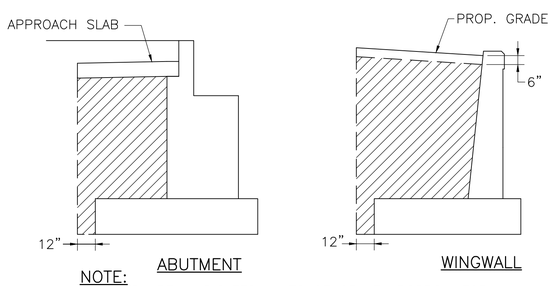

NOTE:
HATCHED AREA INDICATES LIMITS OF GRAVEL BORROW FOR BACKFILLING STRUCTURES AND PIPES.

LIMITS OF GRAVEL BORROW FOR BACKFILLING STRUCTURES AND PIPES
SCALE: $\frac{1}{4}$" = 1'-0"

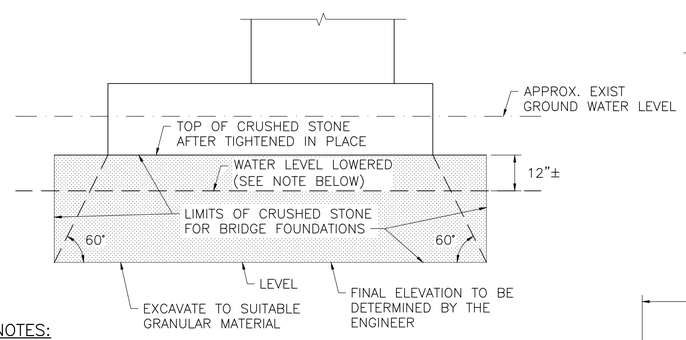

NOTES:

1. LOWER WATER LEVEL AS MUCH AS POSSIBLE WITHOUT DISTURBING THE GRANULAR SOIL (SIDES AND BOTTOM) AND TIGHTEN THE CRUSHED STONE IN PLACE (SEE STANDARD SPECIFICATIONS).
2. SAME TREATMENT IS TO BE USED AT ENDS OF WALLS AND ABUTMENTS.

LIMITS OF CRUSHED STONE FOR BRIDGE FOUNDATIONS
NOT TO SCALE

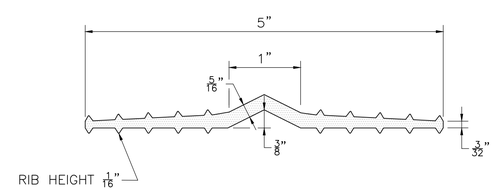

5" WATERSTOP
NOT TO SCALE

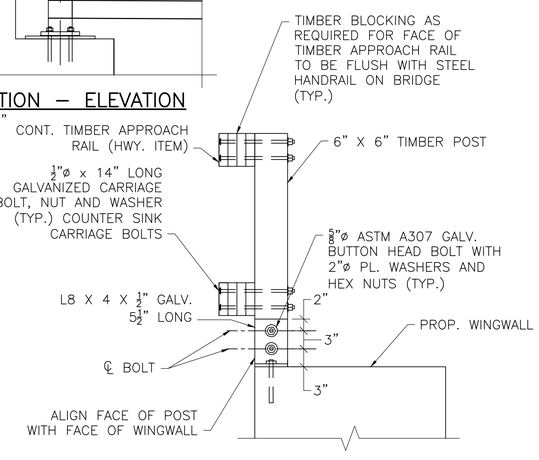

SECTION 5 – TYPICAL BRIDGE RAIL TRANSITION
SCALE: 1" = 1'-0"

DATE	DESCRIPTION
SEPT. 19, 2015	ISSUED FOR CONSTRUCTION
USE ONLY PRINTS OF LATEST DATE	

604531_(A02042)BR7.DWG Plotted on 8-Oct-2015 2:00 PM
Final Structural Submittal (SF) 19-September-2015

MAYNARD & ACTON
ASSABET RIVER RAIL TRAIL

STATE	FED. AID PROJ. NO.	SHEET NO.	TOTAL SHEETS
MA	CMAQ/STP-TE-002S(836)	159	230
PROJECT FILE NO. 604531			

WINGWALL AND FORM LINER DETAILS

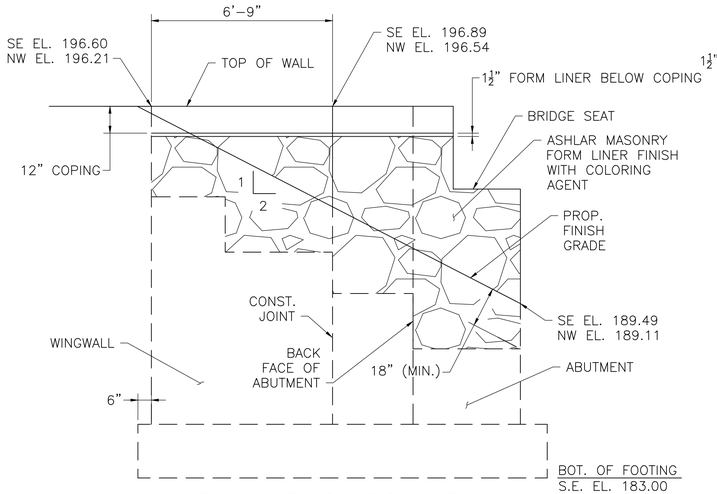

SOUTHEAST & NORTHWEST WINGWALL ELEVATION
SCALE: ⅜" = 1'-0"

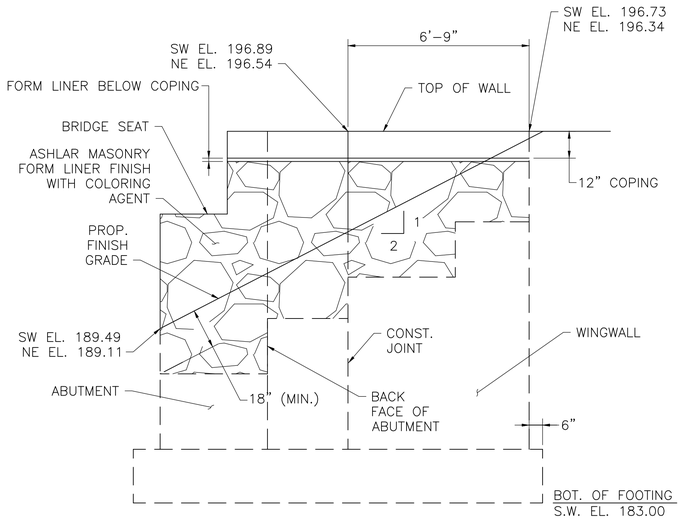

SOUTHWEST & NORTHEAST WINGWALL ELEVATION
SCALE: ⅜" = 1'-0"

WINGWALL NOTES:

1. MEMBRANE WATERPROOFING AND 8"x16"x2", 4000 PSI, ¾ IN, 610 CEMENT CONCRETE BLOCKS LAID IN MORTAR OR OTHER WATERPROOFING PROTECTIVE COURSE, MIN. 2" THICK AS SPECIFIED IN MHD STANDARD SPECIFICATIONS.
2. 4" ø WEEP HOLES 10'-0" O.C. (JUST ABOVE PROTECTIVE COURSE). PROVIDE 1 CUBIC YARD OF CRUSHED STONE AT EACH END OF WEEP HOLE.
3. ALL CONCRETE SHALL BE 4000 PSI, 1½ IN, 565 CEMENT CONCRETE.
4. THE FACTORED BEARING PRESSURE = 4.76 KSF AS PER AASHTO LRFD BRIDGE DESIGN SPECIFICATIONS STRENGTH I LOAD COMBINATION.

   FACTORED BEARING RESISTANCE = 7.75 KSF. FACTORED BEARING RESISTANCE IS THE PRODUCT OF THE NOMINAL BEARING RESISTANCE AND A RESISTANCE FACTOR OF 0.45.

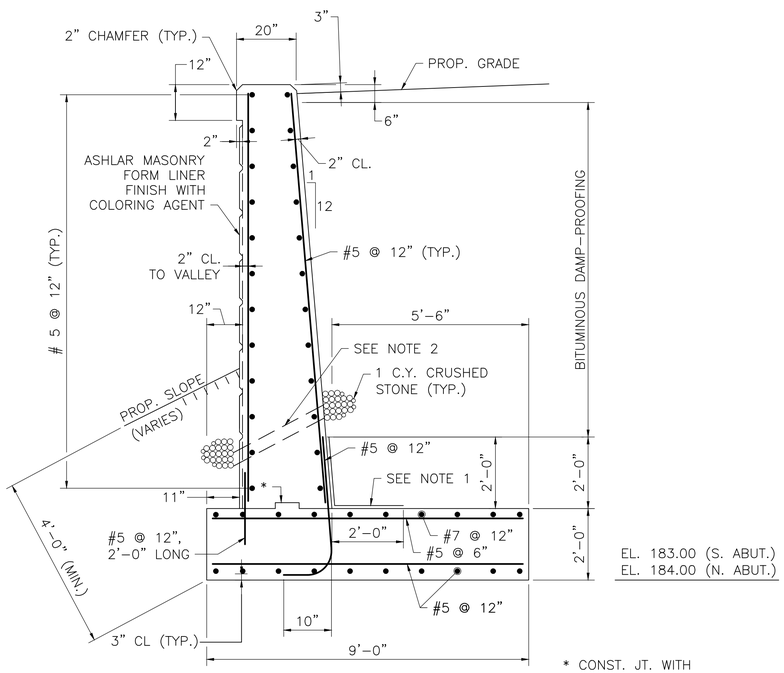

* CONST. JT. WITH 8"X2" KEY

SECTION 3 – TYPICAL U-WINGWALL
SCALE: ½" = 1'-0"

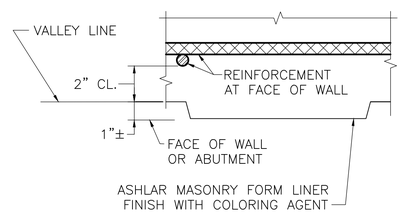

NOTES:

1. FORM LINERS SHALL BE PLACED SUCH THAT THERE ARE NO HORIZONTAL OR VERTICAL FORM LINER JOINTS, EXCEPT AT THE CONSTRUCTION JOINT. THE FORM LINER PANELS SHALL BE INSTALLED END TO END WITHOUT CREATNG A VISIBLE SAM IN THE FINAL CAST CONCRETE.
2. FORM LINERS SHALL BE MATCHED TO MINIMIZE THE APPEARANCE OF THE CONST. JOINT.

TYPICAL FORM LINER DETAIL
SCALE: 3" = 1'-0"

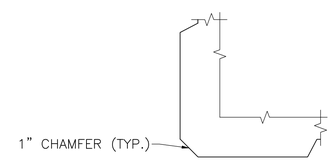

FORM LINER DETAIL AT WALL CORNER
SCALE: 3" = 1'-0"

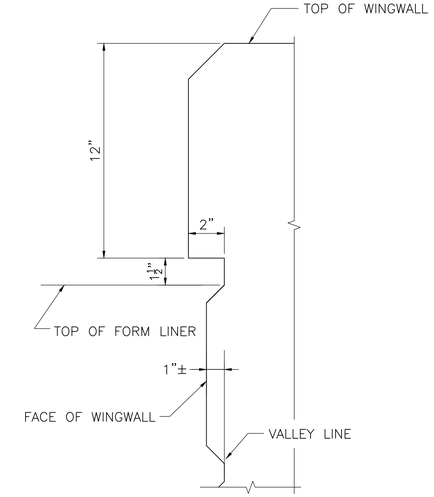

FORM LINER DETAIL AT TOP OF WINGWALL
SCALE: 3" = 1'-0"

SEPT. 19, 2015	ISSUED FOR CONSTRUCTION
DATE	DESCRIPTION
USE ONLY PRINTS OF LATEST DATE	

604531_(A02042)BR5_6.DWG Plotted on 8-Oct-2015 1:59 PM
Final Structural Submittal (SF) 19-September-2015

MAYNARD & ACTON
ASSABET RIVER RAIL TRAIL

STATE	FED. AID PROJ. NO.	SHEET NO.	TOTAL SHEETS
MA	CMAQ/STP-TE-002S(836)	158	230
PROJECT FILE NO. 604531			

ABUTMENT DETAILS

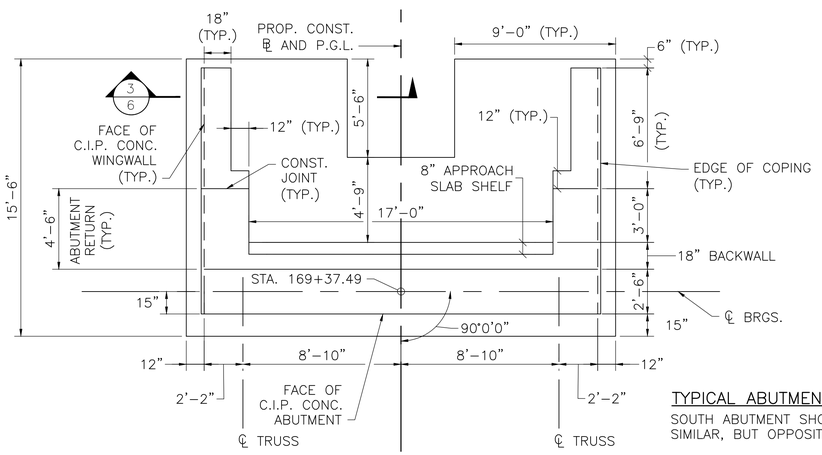

TYPICAL ABUTMENT PLAN

SCALE: $\frac{1}{4}$" = 1'-0"

TYPICAL ABUTMENT PLAN NOTE:

SOUTH ABUTMENT SHOWN, NORTH SIMILAR, BUT OPPOSITE.

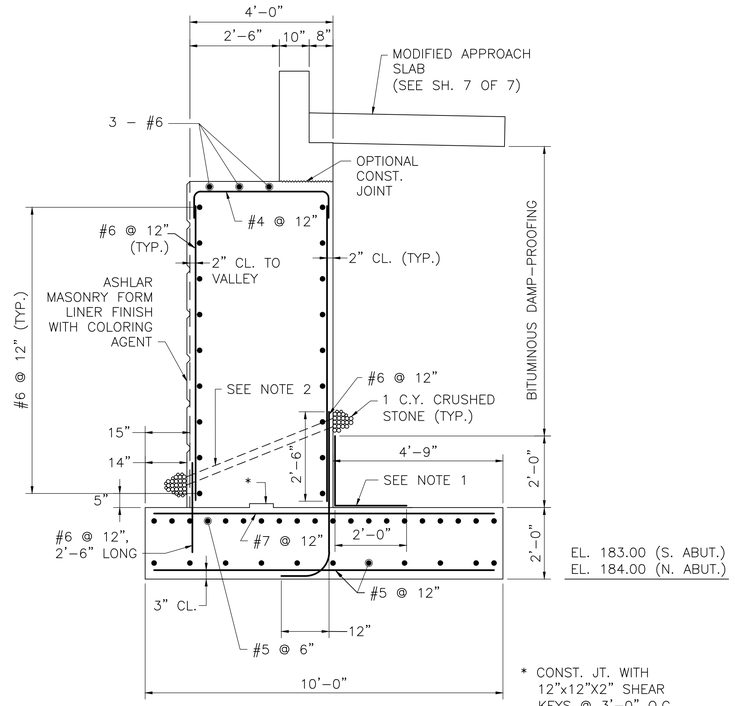

SECTION 1 – TYPICAL ABUTMENT

SCALE: $\frac{1}{2}$" = 1'-0"

ABUTMENT NOTES:

1. MEMBRANE WATERPROOFING AND 8"x16"x2", 4000 PSI, $\frac{3}{4}$ IN, 610 CEMENT CONCRETE BLOCKS LAID IN MORTAR OR OTHER WATERPROOFING PROTECTIVE COURSE, MIN. 2" THICK AS SPECIFIED IN MHD STANDARD SPECIFICATIONS.
2. 4" ø WEEP HOLES 10'-0" O.C. (JUST ABOVE PROTECTIVE COURSE). PROVIDE 1 CUBIC YARD OF CRUSHED STONE AT EACH END OF WEEP HOLE.
3. ABUTMENT STEM AND BACKWALL CONCRETE SHALL BE 4000 PSI, $\frac{3}{4}$ IN, 610 CEMENT CONCRETE. ABUTMENT FOOTING CONCRETE SHALL BE 4000 PSI, $1\frac{1}{2}$ IN, 565 CEMENT CONCRETE.
4. THE FACTORED BEARING PRESSURE = 5.21 KSF AS PER AASHTO LRFD BRIDGE DESIGN SPECIFICATIONS STRENGTH I LOAD COMBINATION.

   FACTORED BEARING RESISTANCE = 9.00 KSF. FACTORED BEARING RESISTANCE IS THE PRODUCT OF THE NOMINAL BEARING RESISTANCE AND A RESISTANCE FACTOR OF 0.45.

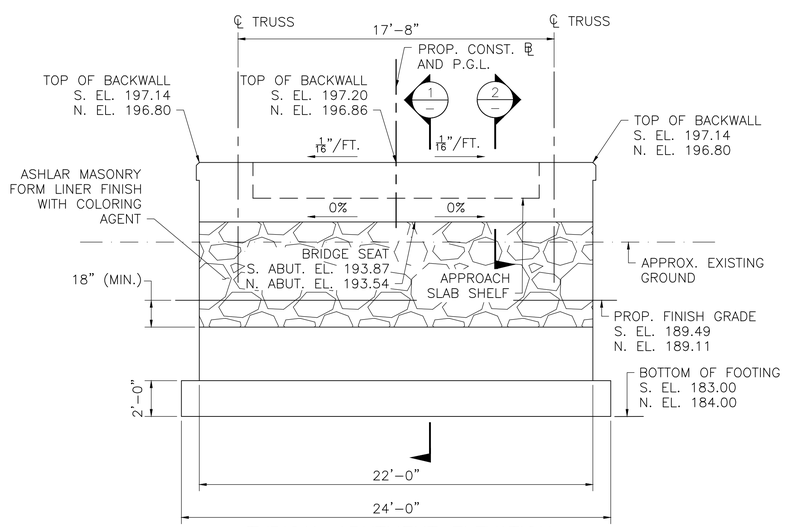

TYPICAL ABUTMENT ELEVATION

SCALE: $\frac{1}{4}$" = 1'-0"

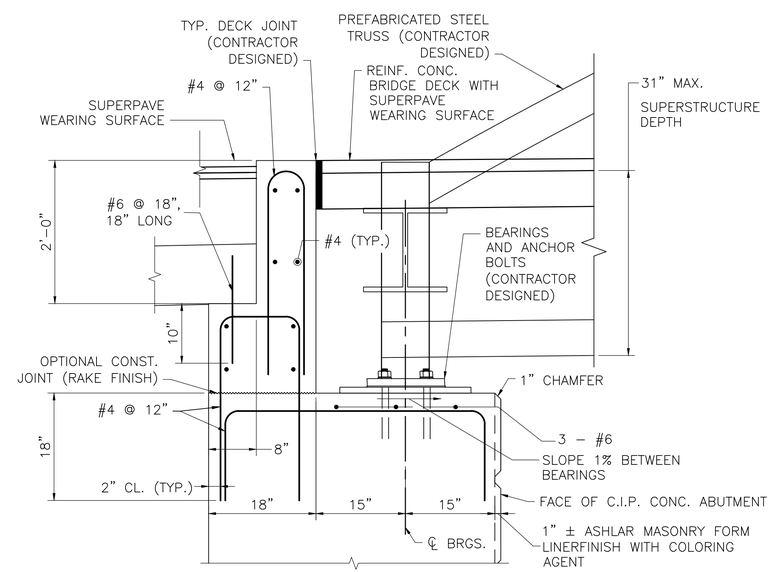

SECTION 2 – DETAILS AT ABUTMENT

SCALE: 1" = 1'-0"

DETAILS AT ABUTMENT NOTES:

1. ALL REINFORCEMENT SHOWN IN THIS DETAIL SHALL BE EPOXY COATED.
2. ALL BACKWALL CONCRETE ABOVE THE OPTIONAL CONSTRUCTION JOINT LOCATED AT THE BRIDGE SEAT SHALL BE 4000 PSI, $\frac{3}{4}$ IN, 610 CEMENT CONCRETE. THE CONSTRUCTION JOINT SHALL BE GIVEN A RAKE FINISH WITH A $\frac{1}{4}$" MINIMUM AMPLITUDE.
3. TOP OF BACKWALL SHALL BE TROWELLED SMOOTH PARALLEL TO THE PROFILE GRADE.
4. THE DECK JOINT SHALL CONFORM TO ADA/AAB REQUIREMENTS.

SEPT. 19, 2015	ISSUED FOR CONSTRUCTION
DATE	DESCRIPTION
USE ONLY PRINTS OF LATEST DATE	

604531_(A02042)BR5_6.DWG Plotted on 8-Oct-2015 1:59 PM
Final Structural Submittal (SF) 19-September-2015

ACTON & MAYNARD
ASSABET RIVER RAIL TRAIL

STATE	FED. AID PROJ. NO.	SHEET NO.	TOTAL SHEETS
MA	CMAQ/STP-TE-002S(836)	157	230
PROJECT FILE NO. 604531			

ELEVATION AND CROSS SECTION

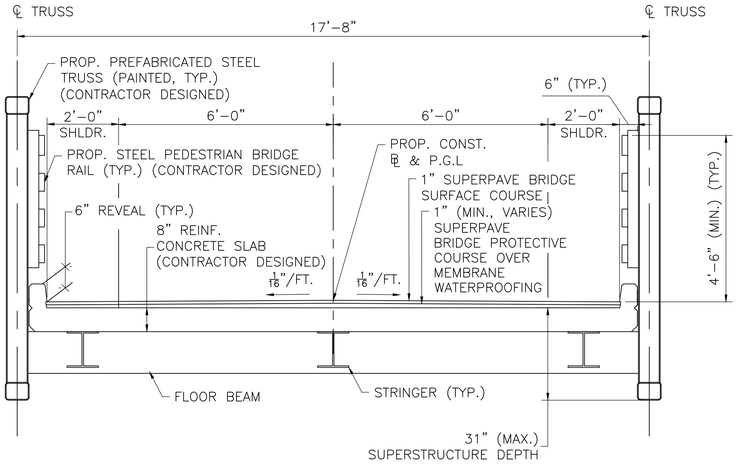

PROPOSED CROSS SECTION
SCALE: 1/2" = 1'-0"

NOTES:

1. FOOTINGS SHALL BE PLACED AT ELEVATIONS SHOWN. FOOTINGS MAY BE PLACED DIRECTLY ON UNDISTURBED GLACIAL TILL. IF UNDISTURBED GLACIAL TILL IS NOT ENCOUNTERED AT THE BOTTOM OF FOOTING ELEVATION (DETERMINED BY ENGINEER) THE CONTRACTOR SHALL EXCAVATE TO SUITABLE GRANULAR MATERIAL AND THE FOOTINGS SHALL BE PLACED ON 18" (MIN.) CRUSHED STONE FOR BRIDGE FOUNDATIONS. ALL FOOTINGS SHALL BEAR ON A UNIFORM MATERIAL.
2. ANY WATER CONTROL STRUCTURE THAT EXTENDS WITHIN THE ZONE OF INFLUENCE OF THE FOOTING SHALL REMAIN IN PLACE. ANY WATER CONTROL STRUCTURE TO REMAIN IN PLACE SHALL BE CUT OFF 2 FEET BELOW THE FINISH GROUND LINE.
3. THE ZONE OF INFLUENCE IS DEFINED AS A PLANE ORIGINATING AT THE PERIMETER OF THE BOTTOM OF THE FOOTING AND PROJECTING DOWN AND AWAY FROM THE FOOTING AT AN ANGLE OF 45°.

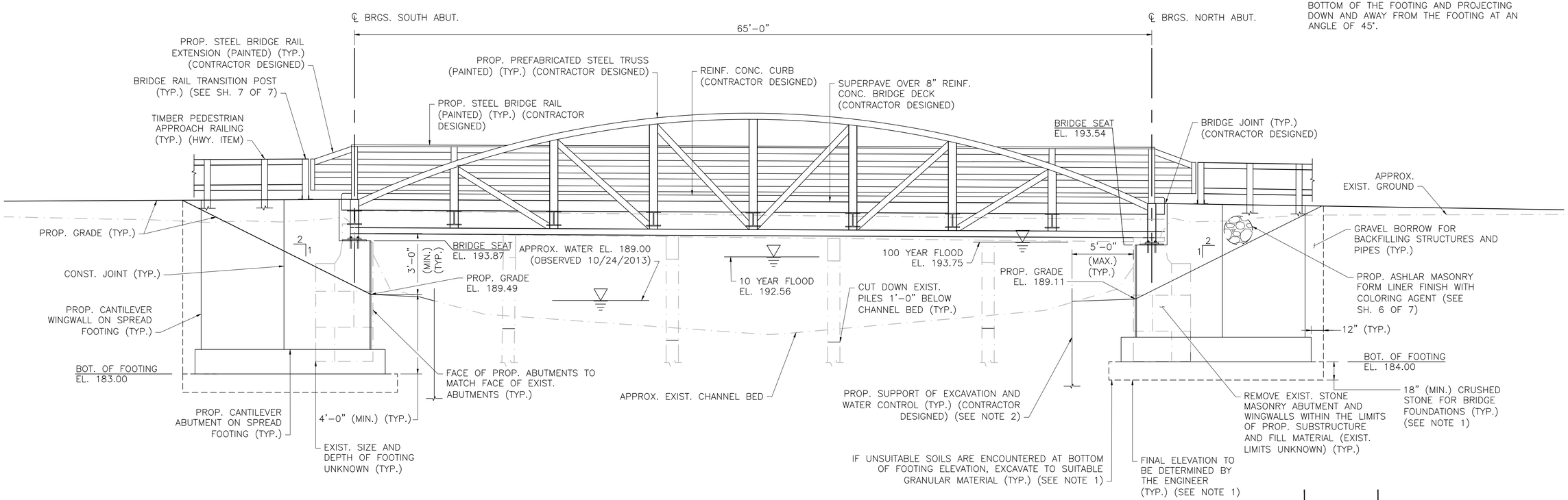

EAST ELEVATION
SCALE: 1/4" = 1'-0"

DATE	DESCRIPTION
SEPT. 19, 2015	ISSUED FOR CONSTRUCTION
USE ONLY PRINTS OF LATEST DATE	

604531_(A02042)BR4.DWG Plotted on 8-Oct-2015 1:58 PM
Final Structural Submittal (SF) 19-September-2015

BORING BB–3

massDOT Highway

NOBIS ENGINEERING, INC.
585 Middlesex Street
Lowell, MA 01851

Phone: (978) 683-0891
Fax: (978) 683-0966
www.nobisengineering.com

Boring No. BB-3
Not to scale

City/Town: Acton | Bridge: A-02-042 (BP6) | Project File No: 604531 | Contract No: 68386

Project: Assabet River Rail Trail | Date Started: March 16, 2015 | Total Hours:

Groundwater Depth: 5'7" | Date & Time: 3/16/2015 1:25 pm | Date Completed: March 16, 2015 | 5.5

Coordinates: N 2991695.19 E 668094.26 | Driller's Name: Ben Cross | Helper's Name: Brett Raiche

Ground Elevation: ± 196 | Inspector's Name: Patrick Clarke | Driller's Company: New Hampshire Boring, Inc.

BOT. SPREAD FOOTING SOUTH ABUTMENT EL. 183.00

Sample Number	Depth Range (Feet)	Blow Counts per 6 Inches Coring Times Minute Per Foot	Recovery Inches	Field Description	Strata Changes
S-1	0' - 2'	2 5 4 3	7"	S-1A (5"): Wet, loose, brown, FINE TO COARSE GRAVEL and fine to coarse sand, some organic silt, trace roots (TOPSOIL). S-1B (2"): Wet, loose, light brown, FINE TO COARSE SAND, some inorganic silt, some fine to medium gravel, trace roots (FILL).	0.4'
S-2	3'6" - 5'6"	32 18 11 9	2"	S-2: Wet, medium dense, light brown, FINE TO COARSE SAND and fine to coarse gravel, some inorganic silt (FILL).	
S-3	5'6" - 7'6"	4 2 2 2	6"	S-3A (4"): Wet, very loose, light brown, FINE TO COARSE SAND and inorganic silt, some medium to coarse gravel (FILL).	
S-4	7'6" - 9'6"	4 WOH WOH WOH	11"	S-3B (2"): Wet, very loose, dark gray, FINE TO COARSE SAND and inorganic silt, trace roots (FILL). S-4: Wet, very loose, olive/gray/light brown, FINE TO COARSE SAND and inorganic silt, trace roots (FILL).	9.5'
S-5	9'6" - 11'6"	11 11 5 4	9"	S-5: Wet, medium dense, brown, INORGANIC SILT and fine sand (SILT). [Laboratory Analysis Performed: Sample determined to be non-plastic. Moisture Content = 38%.]	
S-6	11'6" - 13'6"	7 23 25 24	24"	S-6A (14"): Wet, dense, brown, INORGANIC SILT and fine sand. 2" of ORGANIC SILT observed at transition (SILT).	12.7'
S-7	13'6" - 15'6"	15 15 20 20	7"	S-6B (10"): Wet, dense, gray, FINE TO COARSE SAND, some inorganic silt, some fine to coarse gravel, trace roots (GLACIAL TILL). S-7: Wet, dense, gray, FINE TO COARSE SAND, some inorganic silt, some fine to coarse gravel, trace roots (GLACIAL TILL). [Laboratory Analysis Performed: Sand: 45.1%, Silt: 27.8%, Gravel: 27.1%.]	
				Increased drilling resistance and cuttings observed indicate probable transition into weathered bedrock.	17'
S-8	18'6" - 18'7"	100/1"	1"	S-8: Wet, very dense, gray, FINE TO COARSE SAND, some fine to medium gravel, trace inorganic silt (WEATHERED BEDROCK).	19'
C-1	19' - 24'3"	9 3 4.3 4.8 8 2/3"	51"	C-1: Moderately hard, moderately weathered, extremely to slightly fractured, gray with dark gray bedding, very fine to medium grained GNEISS, very close to close, shallow to steeply dipping open and closed joints. Percent Recovery =81%, RQD = 38%	
C-2	24'3" - 29'3"	0.8 3.3 7 7.5 9.3	50.5"	C-2: Hard, slightly to very slightly weathered, extremely fractured to sound, gray with dark gray bedding, very fine to medium grained GNEISS, very close to moderately close, shallow to steeply dipping closed joints. Percent Recovery = 84%, RQD = 68%	
					29.3'
				Bottom of Exploration = 29'3"	

Notes:
1.Ground surface elevation should be considered approximate.
2. Boring drilled approximately 14'-7" south of existing railroad bridge south abutment.
3. Surface water in Mill Pond frozen and measured at approximately 6' below existing railroad bridge deck.
4. Water induced during drilling and coring processes.
5. Borehole backfilled with drill cuttings.

Protective Device - Stand: Box:
Well Depth: Solid Pipe:
Stick Up Pipe: Screen Pipe:

Penetration Resistance (N) Guide:

Cohesionless Soils (Sands, Gravels)		Cohesive Soils (Silts, Clays)	
Relative Density	Penetration Resistance	Consistency	Penetration Resistance
Very Loose	0 - 4	Very Soft	0 - 2
Loose	4 - 10	Soft	2 - 4
Medium Dense	10 - 30	Medium Stiff	4 - 8
Dense	30 - 50	Stiff	8 - 15
Very Dense	Over 50	Very Stiff	15 - 30
		Hard	Over 30

N=Sum of Second and Third 6" Blow Counts

Terms Used for Second Entry of Descriptions: and = 40-50%, some = 10-40%, trace = 10% or less

Type of Drill Rig: Mobile B-53 (Track)
Casing Type: HW Size: 4" Depth: 18'6"
Hammer Weight: 300Lbs. Fall: 30"
Signs: Cones: Arrow-Board:
Sampler Type: SS Size: 1 3/8"
Automatic Hammer Weight:
Safety Hammer Weight: 140Lbs.
Donut Hammer Weight:
Fall: 30"
Core Barrel Type: NX Size: 2.15"

BORING BB–4

massDOT Highway

NOBIS ENGINEERING, INC.
585 Middlesex Street
Lowell, MA 01851

Phone: (978) 683-0891
Fax: (978) 683-0966
www.nobisengineering.com

Boring No. BB-4
Not to scale

City/Town: Acton | Bridge: A-02-042 (BP6) | Project File No: 604531 | Contract No: 68386

Project: Assabet River Rail Trail | Date Started: March 17, 2015 | Total Hours:

Groundwater Depth: 6'0" | Date & Time: 3/17/2015 1:58 pm | Date Completed: March 17, 2015 | 5.5

Coordinates: N 2991783.81 E 668111.12 | Driller's Name: Pete LaBossiere | Helper's Name: Brett Raiche

Ground Elevation: ± 195.5 | Inspector's Name: Craig Marchionda | Driller's Company: New Hampshire Boring, Inc.

BOT. SPREAD FOOTING NORTH ABUTMENT EL. 184.00

Sample Number	Depth Range (Feet)	Blow Counts per 6 Inches Coring Times Minute Per Foot	Recovery Inches	Field Description	Strata Changes
S-1	0' - 2'	7 7 9 10	9"	S-1A (2"): Wet, medium dense, black, FINE TO COARSE SAND, some organic silt, trace fine to medium gravel (TOPSOIL).	0.2'
S-2	2' - 4'	14 13 12 16	17"	S-1B (7"): Moist, medium dense, brown, FINE TO COARSE SAND, some fine to medium gravel, some inorganic silt, trace root fibers (FILL). S-2: Moist, medium dense, brown, FINE TO COARSE SAND, some inorganic silt, trace fine to medium gravel (FILL).	
S-3	4' - 6'	14 16 15 30	7"	S-3A (2"): Moist, dense, brown, FINE TO COARSE SAND, some inorganic silt, some medium gravel (FILL).	
S-4	6' - 8'	33 36 77 112	11"	S-3B (5"): Moist, dense, brown/gray with some orange mottling, MEDIUM TO COARSE GRAVEL, some inorganic silt, trace fine sand (FILL).	
S-5	9' - 11'	13 3 3 11	16"	S-4: Wet, very dense, gray/brown with some orange mottling, FINE TO MEDIUM GRAVEL, some inorganic silt, some fine to coarse sand. Probable cobble or boulder particles and fragments at bottom of spoon (FILL).	9'
					9.5'
S-6	11' - 13'	10 12 13 14	6"	Roller bit through inferred cobbles/boulder and advance casing to depth of approximately 9' below ground surface.	11'
				S-5A (6"): Wet, loose, black, INORGANIC SILT, trace medium gravel, trace fine sand, trace organic silt (SILT).	
S-7	14' - 16'	7 23 23 17	8"	S-5B (10"): Wet, loose, brown, FINE TO COARSE SAND and inorganic silt, trace fine gravel (SAND AND SILT). [Laboratory Analysis Performed: Sand: 57.9%, Silt: 41.1%, Gravel: 1%.]	
				S-6: Wet, medium dense, gray, FINE TO COARSE SAND, some fine to medium gravel, trace inorganic silt (GLACIAL TILL). S-7: Wet, dense, gray, FINE TO COARSE SAND, some inorganic silt, some fine to medium gravel (GLACIAL TILL). [Laboratory Analysis Performed: Sand: 48.2%, Silt: 34.4%, Gravel: 17.4%.]	
S-8	19' - 21'	54 18 17 11	0"	S-8: No recovery.	
					22.5'
				Increased drilling resistance observed indicating probable transition into weathered bedrock.	23'
C-1	23' - 28'	2.5 2.8 2.3 2.8 2.8	60"	C-1: Moderately hard to hard, moderately to very severely weathered, extremely fractured to sound, gray and black, GNEISS, close to moderately close, moderately dipping joints. Percent Recovery = 100%, RQD = 38%	
C-2	28' - 33'	2.5 5.8 6 4.3 3	53"	C-2: Moderately hard to hard, very slightly to very severely weathered, extremely fractured to sound, gray and black, GNEISS, close to moderately close, shallow dipping joints. Percent Recovery = 88%, RQD = 30%	
				Bottom of Exploration = 33'	33'

Notes:
1. Ground surface elevation should be considered approximate.
2. Boring drilled approximately 9'-6" north of existing railroad bridge north abutment.
3. Surface water in Mill Pond measured at approximately 6' below adjacent existing grade.
4. Water induced during drilling and coring processes.
5. Borehole backfilled with drill cuttings.

Protective Device - Stand: Box:
Well Depth: Solid Pipe:
Stick Up Pipe: Screen Pipe:

Penetration Resistance (N) Guide:

Cohesionless Soils (Sands, Gravels)		Cohesive Soils (Silts, Clays)	
Relative Density	Penetration Resistance	Consistency	Penetration Resistance
Very Loose	0 - 4	Very Soft	0 - 2
Loose	4 - 10	Soft	2 - 4
Medium Dense	10 - 30	Medium Stiff	4 - 8
Dense	30 - 50	Stiff	8 - 15
Very Dense	Over 50	Very Stiff	15 - 30
		Hard	Over 30

N=Sum of Second and Third 6" Blow Counts

Terms Used for Second Entry of Descriptions: and = 40-50%, some = 10-40%, trace = 10% or less

Type of Drill Rig: Mobile B-53 (Track)
Casing Type: HW Size: 4" Depth: 22'6"
Hammer Weight: 300Lbs. Fall: 30"
Signs: Cones: Arrow-Board:
Sampler Type: SS Size: 1 3/8"
Automatic Hammer Weight:
Safety Hammer Weight: 140Lbs.
Donut Hammer Weight:
Fall: 30"
Core Barrel Type: NX Size: 2.15"

MAYNARD & ACTON
ASSABET RIVER RAIL TRAIL

STATE	FED. AID PROJ. NO.	SHEET NO.	TOTAL SHEETS
MA	CMAQ/STP–TE–002S(836)	156	230

PROJECT FILE NO. 604531

BORING LOGS

BORING NOTES

1. LOCATION OF BORINGS SHOWN ON THE PLAN THUS: BB–3
2. BORINGS ARE TAKEN FOR THE PURPOSE OF DESIGN AND SHOW CONDITIONS AT BORING POINTS ONLY, BUT DO NOT NECESSARILY SHOW THE NATURE OF THE MATERIALS TO BE ENCOUNTERED DURING CONSTRUCTION.
3. WATER LEVELS SHOWN ON THE BORING LOGS WERE OBSERVED AT THE TIME OF TAKING BORINGS AND DO NOT NECESSARILY SHOW THE TRUE GROUND WATER LEVEL.
4. FIGURES IN THE COLUMNS INDICATE NUMBER OF BLOWS REQUIRED TO DRIVE A 1 3/8" I.D. SPLIT SPOON SAMPLER 6" USING A 140 POUND WEIGHT FALLING 30".
5. BORING SAMPLES ARE STORED AT A STORAGE FACILITY LOCATED ON ROUTE 114 (219 WINTHROP AVENUE) LAWRENCE, MA. THE CONTRACTOR MAY EXAMINE THE SOIL AND ROCK SAMPLES BY CONTACTING THE MASSDOT GEOTECHNICAL SECTION AT 10 PARK PLAZA BOSTON, MA.
6. BORINGS BB–3 AND BB–4 WERE MADE IN MARCH 2015.
7. BORINGS WERE MADE BY NEW HAMPSHIRE BORINGS, INC. OF DERRY, NH UNDER THE GUIDANCE OF NOBIS ENGINEERING, INC.
8. THE NORTH AMERICAN VERTICAL DATUM (NAVD) OF 1988 IS USED THROUGHOUT.
9. GROUND SURFACE ELEVATIONS ARE APPROXIMATE.

DATE	DESCRIPTION
SEPT. 19, 2015	ISSUED FOR CONSTRUCTION

USE ONLY PRINTS OF LATEST DATE

604531_(A02042)BR3.DWG Plotted on 8-Oct-2015 1:58 PM
Final Structural Submittal (SF) 19-September-2015

GENERAL NOTES

DESIGN:
IN ACCORDANCE WITH THE 2014 AMERICAN ASSOCIATION OF STATE HIGHWAY AND TRANSPORTATION OFFICIALS LRFD BRIDGE DESIGN SPECIFICATIONS AND THE 2009 AASHTO LRFD GUIDE SPECIFICATIONS FOR THE DESIGN OF PEDESTRIAN BRIDGES, FOR H10 LOADING AND 90 PSF PEDESTRIAN LOADING.

MASSDOT BENCH MARK:
BENCH MARK – MAG NAIL SET, TRAV. POINT 9
N 2991659.67 E 668084.73
STA. 168+83.55 1.15' LT
EL. 196.01'

ELEVATIONS ARE BASED ON THE NORTH AMERICAN VERTICAL DATUM (NAVD) OF 1988.

MASSDOT SURVEY NOTEBOOKS:
COPIES OF ELECTRONIC SURVEY FILES MAY BE OBTAINED FROM THE MASSACHUSETTS DEPARTMENT OF TRANSPORTATION – HIGHWAY DIVISION.

SCALES:
SCALES NOTED ON THE PLANS ARE NOT APPLICABLE TO REDUCED SIZED PRINTS. DIVIDE SCALES BY 2 FOR HALF-SIZE PRINTS (A3).

FOUNDATIONS:
FOUNDATIONS MAY BE ALTERED, IF NECESSARY, TO SUIT CONDITIONS ENCOUNTERED DURING CONSTRUCTION, WITH THE APPROVAL OF THE ENGINEER.

UNSUITABLE MATERIAL:
ALL UNSUITABLE MATERIAL SHALL BE REMOVED WITHIN THE LIMITS OF THE FOUNDATIONS OF THE STRUCTURE, AS DIRECTED BY THE ENGINEER.

SEISMIC GROUND SHAKING HAZARD:
DESIGN RETURN PERIOD: 1000 YEARS

DESIGN SPECTRA:

A_S = 0.116
S_{DS} = 0.240
S_{D1} = 0.095

SITE CLASS = D

SEISMIC DESIGN CATEGORY (SDC) = A

ANCHOR BOLTS:
ALL ANCHOR BOLTS SHALL BE SET BY TEMPLATE BEFORE THE CONCRETE IS PLACED.

REINFORCEMENT:
REINFORCING STEEL SHALL CONFORM TO THE REQUIREMENTS OF AASHTO M 31 GRADE 60 (EPOXY COATED). UNLESS OTHERWISE NOTED ON THE CONSTRUCTION DRAWINGS, ALL BARS SHALL BE LAPPED AS FOLLOWS:

MODIFICATION CONDITION	#4 BARS	#5 BARS
1. NONE	21"	26"
2. 12" OF CONCRETE BELOW BAR	29"	36"
3. COATED BARS, COVER < 3db, OR CLEAR SPACING < 6db	31"	39"
4. COATED BARS, ALL OTHER CASES	25"	31"
5. CONDITION 2. AND 3.	35"	44"
6. CONDITION 2. AND 4.	34"	43"

IF THE ABOVE BARS ARE SPACED 6" OR MORE ON CENTER, THE LAP LENGTH SHALL BE 80% OF THE LAP LENGTH GIVEN ABOVE. ALL OTHER BARS SHALL BE LAPPED AS SHOWN ON THE CONSTRUCTION DRAWINGS.

CONCRETE MIXES:

(1)	(2)	(3)	TO BE USED IN CONSTRUCTION OF:
4000	$1\frac{1}{2}$	565	WINGWALLS, FOOTINGS, AND APPROACH SLABS
4000	$\frac{3}{4}$	610	ABUTMENT STEMS, ABUTMENT RETURNS, AND BACKWALLS
4000	$\frac{3}{4}$	585HP	DECK AND CURBS

(1) 28 DAY COMPRESSIVE STRENGTH (PSI)
(2) MAXIMUM AGGREGATE SIZE (INCH)
(3) CEMENTITIOUS CONTENT (POUNDS/C.Y.)

CONTRACTOR DESIGNED SUPERSTRUCTURE:
STRUCTURAL STEEL TRUSS (INCLUDING CAMBER AND TOP OF FORM ELEVATIONS), CONCRETE DECK, CONCRETE CURBS, BEARINGS, ANCHOR BOLTS, STEEL RAILINGS, AND DECK JOINTS SHALL BE CONTRACTOR DESIGNED IN ACCORDANCE WITH THE 2014 AMERICAN ASSOCIATION OF STATE HIGHWAY AND TRANSPORTATION OFFICIALS LRFD BRIDGE DESIGN SPECIFICATIONS AND THE 2009 AASHTO LRFD GUIDE SPECIFICATIONS FOR THE DESIGN OF PEDESTRIAN BRIDGES, FOR H10 LOADING AND 90 PSF PEDESTRIAN LOADING. STEEL TRUSS AND BRIDGE RAIL SHALL BE PAINTED TO MATCH COLOR CHIP NO. 30045 OF FEDERAL STANDARD 595B.

THE ABUTMENT DESIGN ASSUMES NORMAL WEIGHT (150 PCF) REINFORCED CONCRETE AND STEEL TRUSS DEAD LOAD WITHIN A RANGE OF 28 KIPS TO 35 KIPS (SERVICE LOAD). IF THE WEIGHT OF THE CONTRACTOR DESIGNED TRUSS IS NOT WITHIN THE SPECIFIED RANGE, THE ABUTMENT AND BACKWALL DESIGN (STABILITY AND REINFORCING) SHALL BE COMPLETED AND STAMPED BY A PROFESSIONAL ENGINEER REGISTERED IN THE COMMONWEALTH OF MASSACHUSETTS. THE CALCULATIONS PERFORMED SHALL BE SUPPLIED TO THE ENGINEER FOR APPROVAL.

CONSTRUCTION ACCESS RESTRICTION:
THE CONTRACTOR IS DIRECTED TO SUPPLEMENTAL SPECIFICATION SECTION 901.67 AND 960.61 FOR RESTRICTIONS OF LOADING ON THE NEWLY CONSTRUCTED BRIDGE. ANY LOADING EXCEEDING THE DESIGN LOADING SHALL BE RESTRICTED FROM TRAVELING OVER THE BRIDGE. THE CONTRACTOR MAY ELECT TO SUBMIT CALCULATIONS STAMPED BY A PROFESSIONAL ENGINEER REGISTERED IN THE STATE OF MASSACHUSETTS TO THE ENGINEER FOR APPROVAL, WHICH DEMONSTRATE THAT CONSTRUCTION LOADS CAN SAFELY TRAVEL OVER THE STRUCTURE.

HYDRAULIC DATA

HYDRAULIC DESIGN DATA

DRAINAGE AREA: 20.5 SQUARE MILES
DESIGN FLOOD DISCHARGE: 545 CUBIC FEET PER SECOND
DESIGN FLOOD FREQUENCY: 10 YEARS
DESIGN FLOOD VELOCITY: 1.6 FEET PER SECOND
DESIGN FLOOD ELEVATION: 192.56 FEET, NAVD

BASE (100 YEAR) FLOOD DATA

BASE FLOOD DISCHARGE: 955 CUBIC FEET PER SECOND
BASE FLOOD ELEVATION: 193.75 FEET, NAVD

DESIGN AND CHECK SCOUR DATA

DESIGN SCOUR FLOOD EVENT RETURN FREQUENCY: 25 YEARS
CHECK SCOUR FLOOD EVENT RETURN FREQUENCY: 50 YEARS

FLOOD OF RECORD

DISCHARGE: UNKNOWN
FREQUENCY: UNKNOWN
MAXIMUM ELEVATION: UNKNOWN
DATE: UNKNOWN

HISTORY OF ICE FLOES: NONE DOCUMENTED IN NBIS DATABASE
EVIDENCE OF SCOUR AND EROSION: NONE OBSERVED

ESTIMATED QUANTITIES
(NOT GUARANTEED)

ITEM DESCRIPTION	QUANTITY	UNIT
DEMOLITION OF SUPERSTRUCTURE BRIDGE NO. A-02-042	1	LS
BRIDGE EXCAVATION	320	CY
GRAVEL BORROW FOR BACKFILLING STRUCTURES AND PIPES	160	CY
CRUSHED STONE FOR BRIDGE FOUNDATIONS	85	TON
SUPERPAVE BRIDGE SURFACE COURSE – 12.5 (SSC-B-12.5)	10	TON
SUPERPAVE BRIDGE PROTECTIVE COURSE – 12.5 (SPC-B-12.5)	8	TON
TIMBER FENCE POST ON WALL	4	EA
STONE MASONRY WALL REMOVED	80	CY
TEMPORARY SHORING	1	LS
CONTROL OF WATER – STRUCTURE NO. A-02-042 (BP6)	1	LS
BRIDGE STRUCTURE, BRIDGE NO. A-02-042 (BP6)	1	LS

DATE	DESCRIPTION
SEPT. 19, 2015	ISSUED FOR CONSTRUCTION
USE ONLY PRINTS OF LATEST DATE	

604531_(A02042)BR1_2.DWG Plotted on 8-Oct-2015 1:57 PM
Final Structural Submittal (SF) 19-September-2015

MAYNARD & ACTON
ASSABET RIVER RAIL TRAIL

STATE	FED. AID PROJ. NO.	SHEET NO.	TOTAL SHEETS
MA	CMAQ/STP-TE-002S(836)	154	230
PROJECT FILE NO. 604531			

KEY PLAN, LOCUS MAP, AND PROFILES

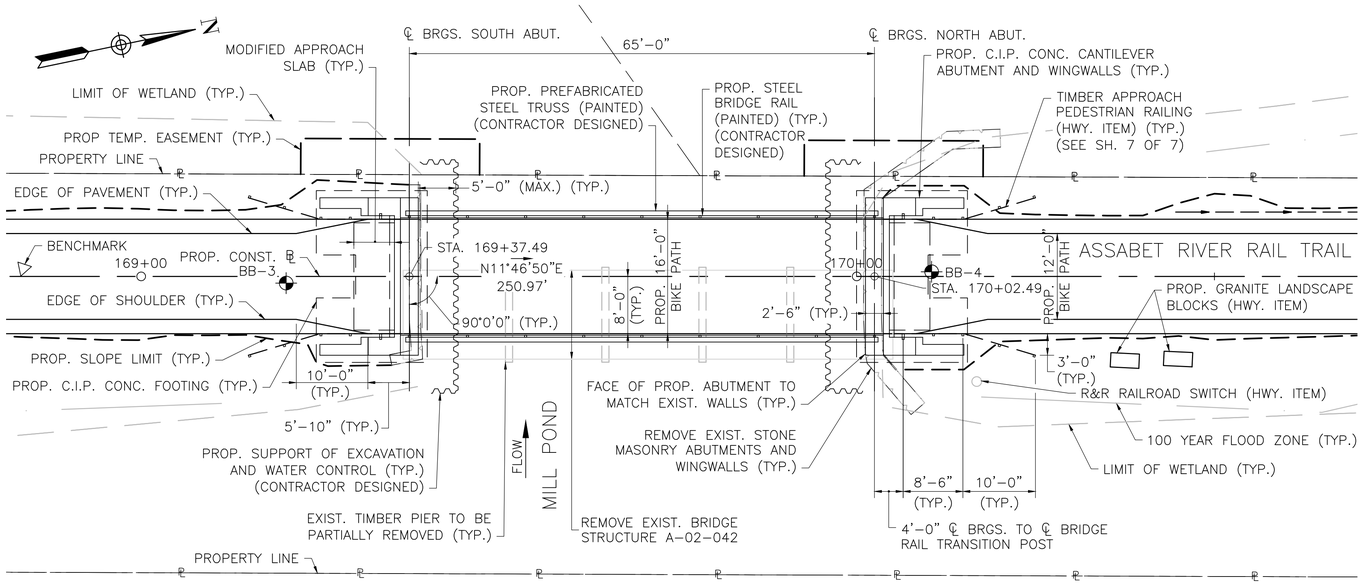

KEY PLAN
SCALE: 1" = 10'

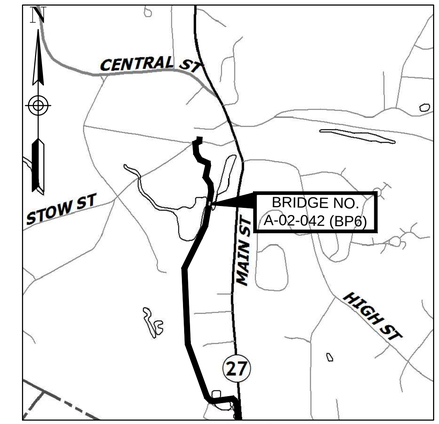

LOCUS
SCALE: 1" = 1000'

INDEX OF BRIDGE SHEETS:

1. KEY PLAN, LOCUS MAP, AND PROFILES
2. GENERAL NOTES AND ESTIMATED QUANTITIES
3. BORING LOGS
4. ELEVATION AND CROSS SECTION
5. ABUTMENT DETAILS
6. WINGWALL AND FORM LINER DETAILS
7. APPROACH SLAB AND MISC. DETAILS

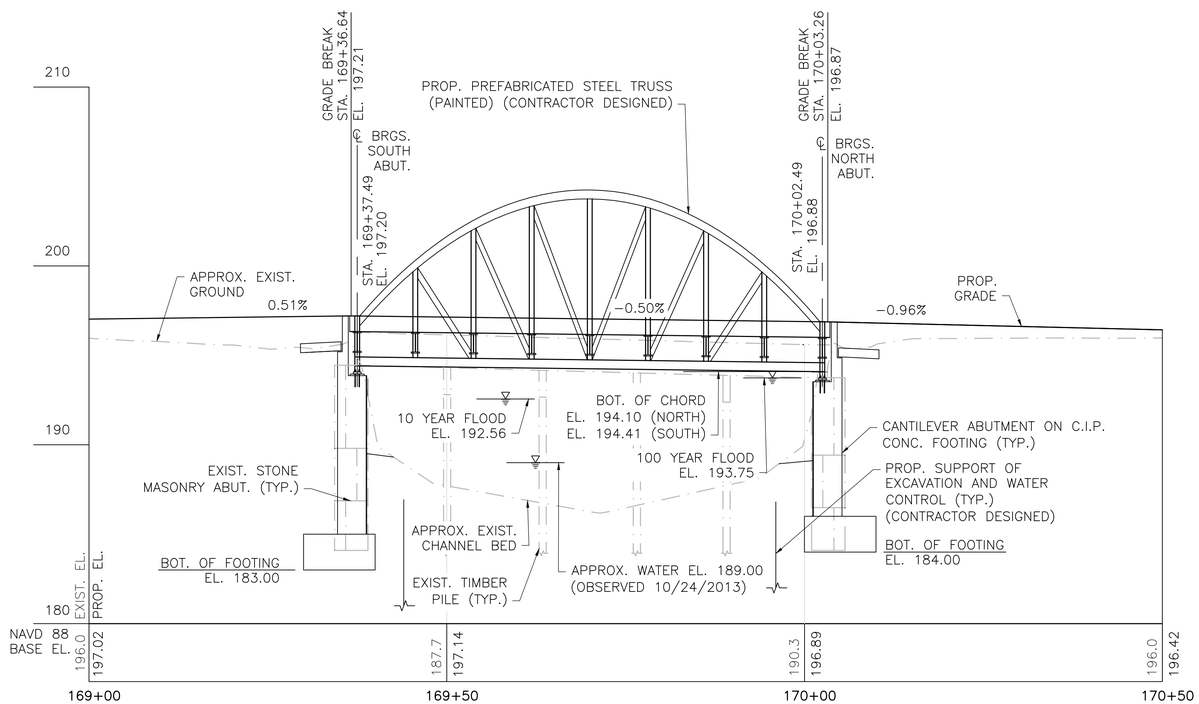

PROFILE – ALONG CONST. ℄ & P.G.L.
SCALE: 1" = 10' HORIZ.
¼" = 1'-0" VERT.

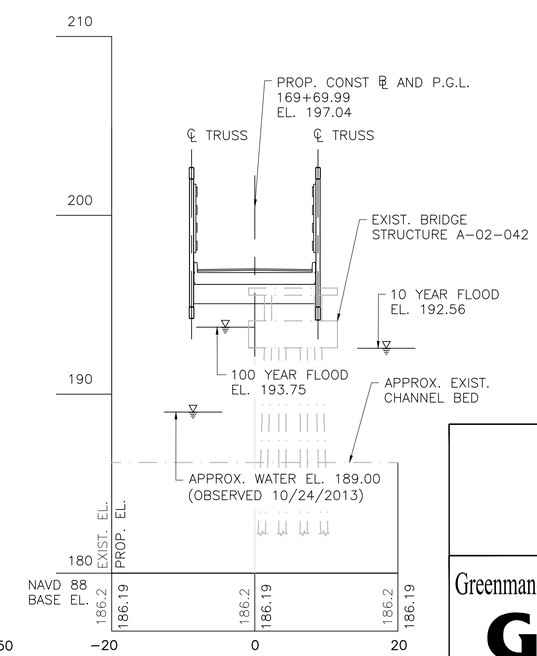

PROFILE – ALONG MILL POND
SCALE: 1" = 10' HORIZ.
¼" = 1'-0" VERT.

NOTE:
FOR GENERAL NOTES, SEE SHEET 2.

SEPT. 19, 2015	ISSUED FOR CONSTRUCTION

massDOT Massachusetts Department of Transportation Highway Division

PROPOSED BRIDGE
ACTON
ASSABET RIVER RAIL TRAIL
OVER MILL POND
MASSACHUSETTS DEPARTMENT OF TRANSPORTATION
HIGHWAY DIVISION
10 PARK PLAZA BOSTON, MASS

Greenman-Pedersen, Inc.
GPI
181 Ballardvale Street, Suite 202
Wilmington, MA 01887

TITLE:
CHIEF ENGINEER

604531_(A02042)BR1_2.DWG Plotted on 8-Oct-2015 1:57 PM
Final Structural Submittal (SF) 19-September-2015

MAYNARD & ACTON
ASSABET RIVER RAIL TRAIL

STATE	FED. AID PROJ. NO.	SHEET NO.	TOTAL SHEETS
MA	CMAQ/STP-TE-002S(836)	153	230
PROJECT FILE NO. 604531			

APPROACH RAIL PLAN & ELEVATION

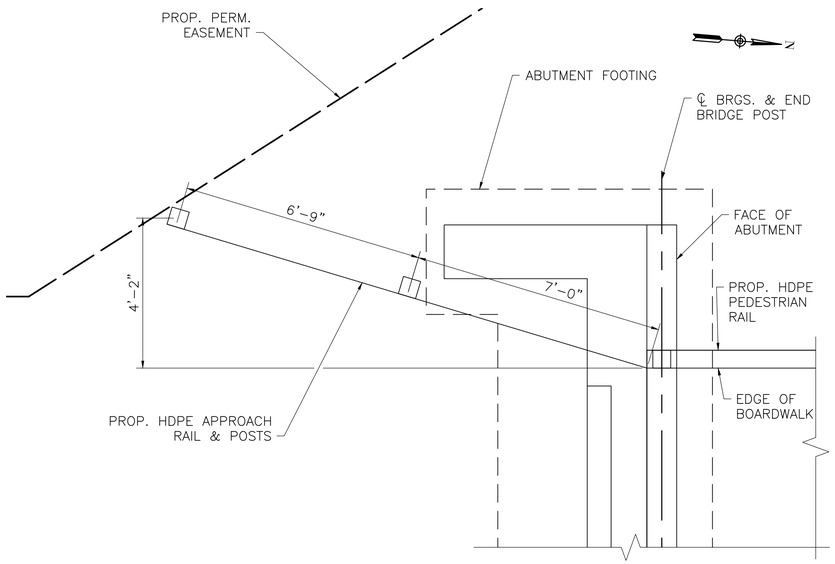

APPROACH RAIL PLAN – ABUTMENT 1
SCALE: 1/2" = 1'-0"

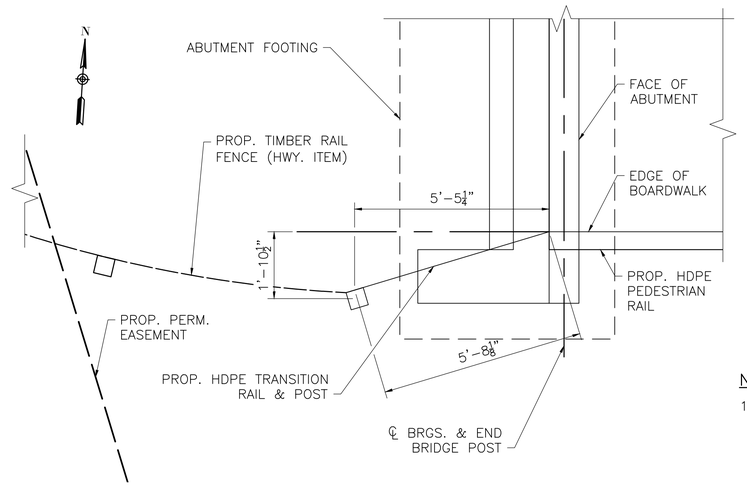

APPROACH RAIL PLAN – ABUTMENT 4
SCALE: 1/2" = 1'-0"

NOTE:

1. ABUTMENT 4 SOUTH SIDE SHOWN, NORTH SIDE SIMILAR.

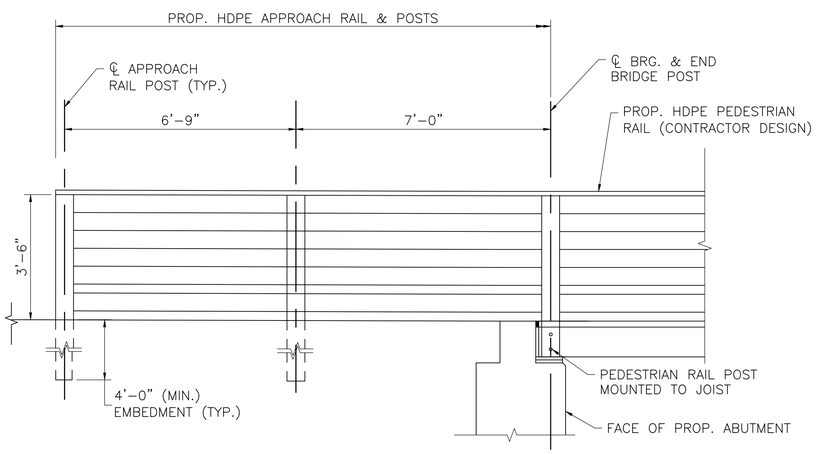

APPROACH RAIL WEST ELEVATION – ABUTMENT 1
SCALE: 1/2" = 1'-0"

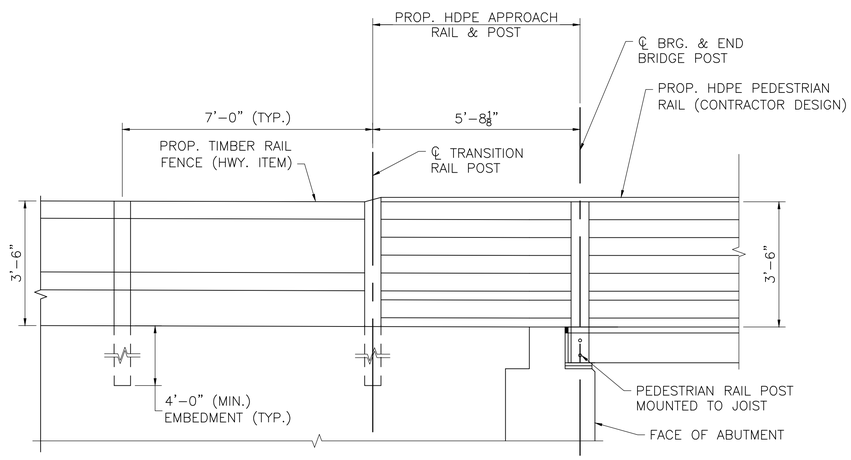

APPROACH RAIL ELEVATION – ABUTMENT 4
SCALE: 1/2" = 1'-0"

DATE	DESCRIPTION
SEPT. 19, 2015	ISSUED FOR CONSTRUCTION
USE ONLY PRINTS OF LATEST DATE	

SHEET 10 OF 10 SHEETS BRIDGE NO. A-02-034 (BP5)

604531_(A02034)BR10.DWG Plotted on 8-Oct-2015 1:56 PM

Final Structural Submittal (SF) 19-September-2015

MAYNARD & ACTON
ASSABET RIVER RAIL TRAIL

STATE	FED. AID PROJ. NO.	SHEET NO.	TOTAL SHEETS
MA	CMAQ/STP-TE-002S(836)	152	230
PROJECT FILE NO. 604531			

CROSS SECTION, PILE ELEVATION & MISC. DETAILS

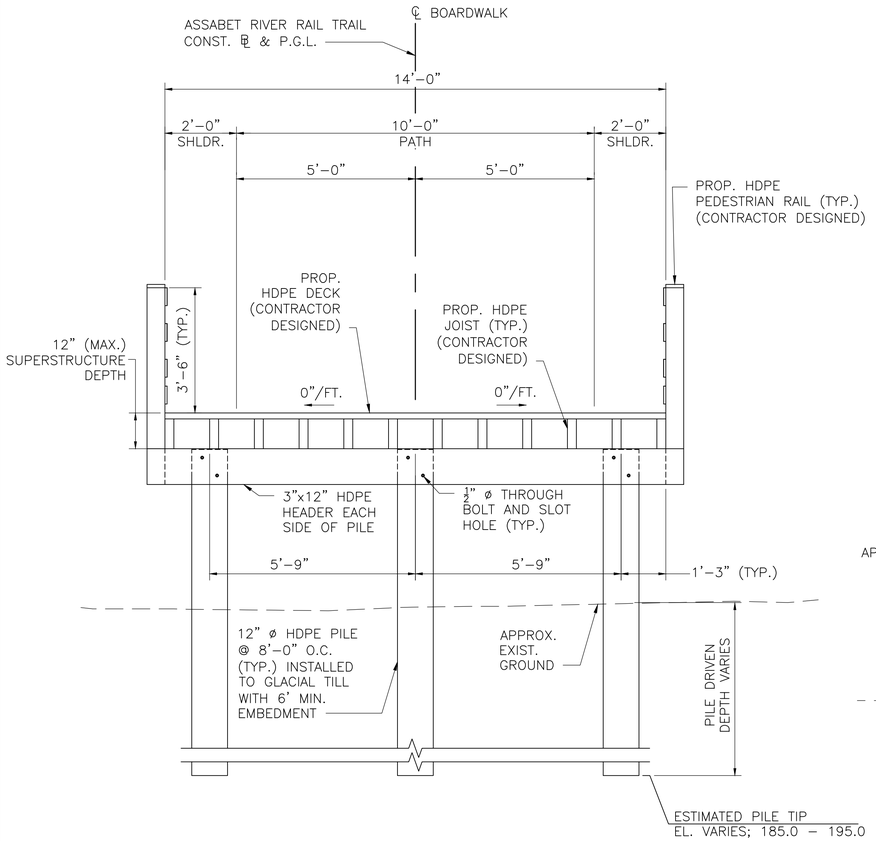

SECTION 1 (SEE SHEET 1 FOR LOCATION)
SCALE: 1/2" = 1'-0"

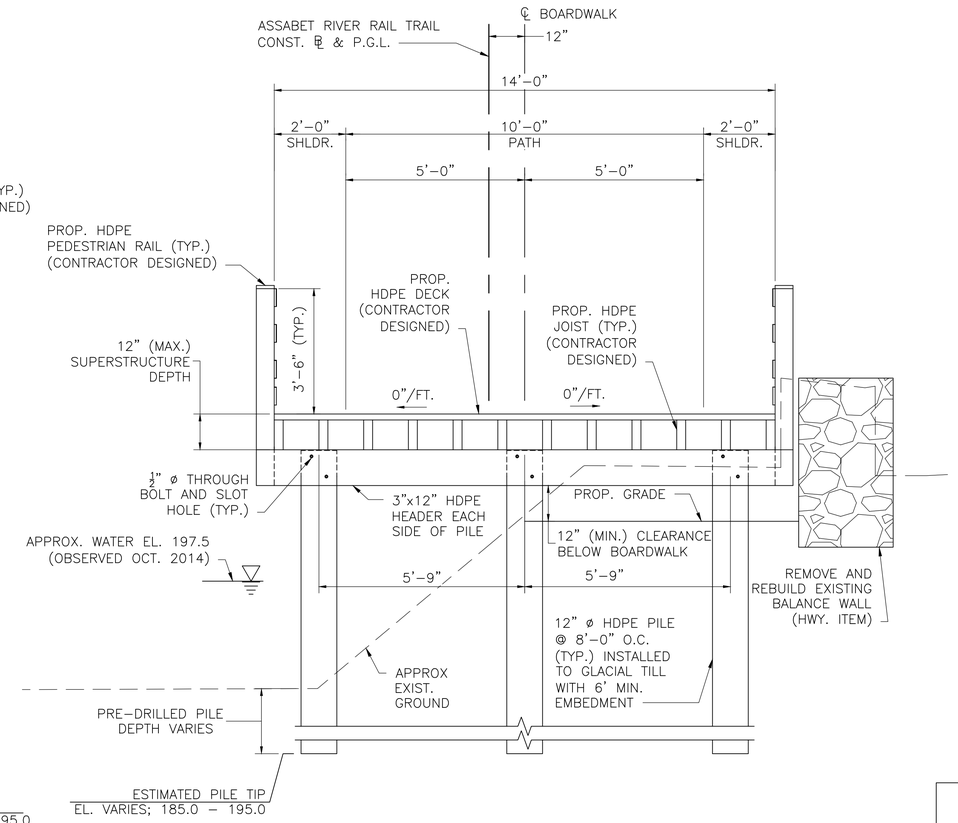

SECTION 2 (SEE SHEET 1 FOR LOCATION)
SCALE: 1/2" = 1'-0"

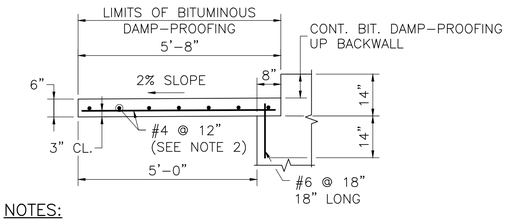

NOTES:

1. APPROACH SLAB TO BE 4000 PSI, 1½ IN, 565 CEMENT CONCRETE.
2. PLACE LONGITUDINAL REINFORCEMENT PERPENDICULAR TO THE ABUTMENT.
3. PLACE TRANSVERSE REINFORCEMENT PARALLEL TO ABUTMENT.
4. SEE ABUTMENT PLAN VIEWS FOR APPROACH SLAB PLAN DETAIL.

TYPICAL APPROACH SLAB SECTION
SCALE: 1/2" = 1'-0"

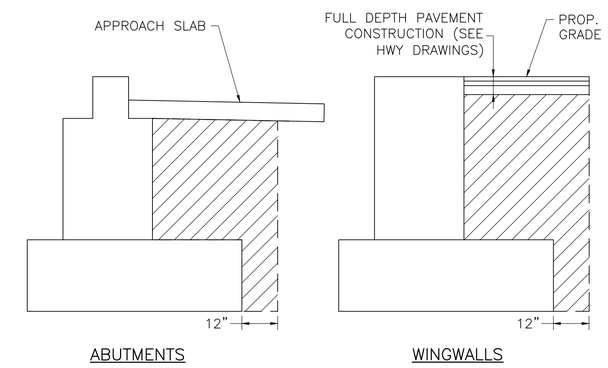

NOTE:
HATCHED AREA INDICATES LIMITS OF GRAVEL BORROW FOR BACKFILLING STRUCTURES AND PIPES.

LIMITS OF GRAVEL BORROW FOR BACKFILLING STRUCTURES AND PIPES
SCALE: 1/2" = 1'-0"

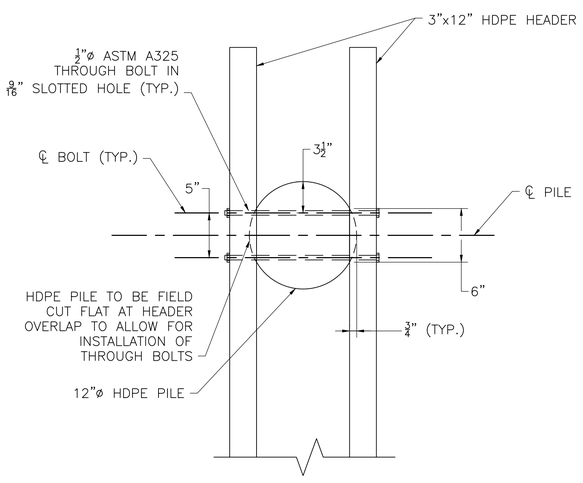

TYPICAL PILE CONNECTION DETAIL
SCALE: 1 1/2" = 1'-0"

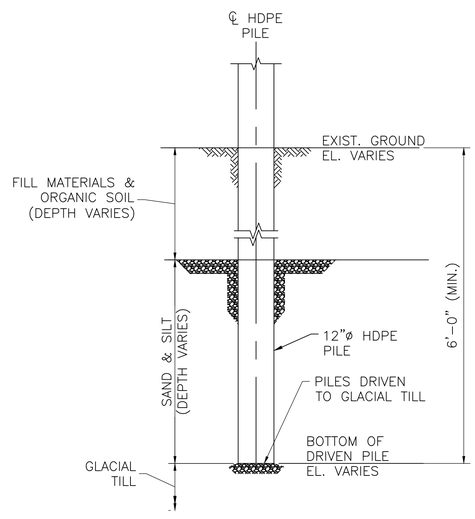

PILE ELEVATION DETAIL AT SECTION 1
SCALE: N.T.S

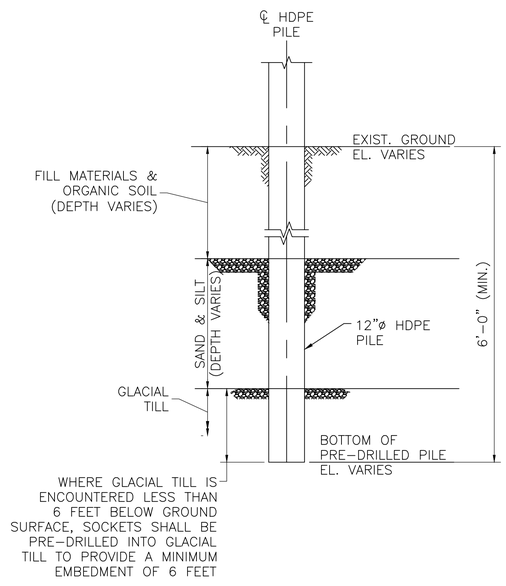

PILE ELEVATION DETAIL AT SECTION 2
SCALE: N.T.S

PILE NOTES:

1. THE FACTORED AXIAL DESIGN LOAD PER PILE IS 13.44 KIPS AS PER AASHTO LRFD BRIDGE DESIGN SPECIFICATIONS STRENGTH I LOAD COMBINATION.

   THE FACTORED STRUCTURAL RESISTANCE PER PILE IS 45.5 KIPS AND IS THE PRODUCT OF THE NOMINAL STRUCTURAL RESISTANCE OF 50.5 KIPS AND A RESISTANCE FACTOR OF 0.9.
2. THE FACTORED GEOTECHNICAL PILE RESISTANCE IS 15.1 KIPS AND IS THE PRODUCT OF THE NOMINAL GEOTECHNICAL RESISTANCE OF 33.6 KIPS AND A RESISTANCE FACTOR OF 0.45. THE ESTIMATED TIP ELEVATION VARIES FROM 185 TO 195 FEET.
3. DETERMINATION OF THE DRIVEN PILE RESISTANCE, PILE DRIVING CRITERIA, AND PILE INTEGRITY SHALL BE PERFORMED USING THE STATIC LOAD TESTING METHOD ON A SACRIFICIAL HDPE PILE PRIOR TO THE ORDERING OF PRODUCTION PILES.
4. DYNAMIC PILE TESTING USING A PILE DRIVING ANALYZER (PDA) SHALL BE USED TO CONFIRM PRODUCTION PILES WITH A RESISTANCE FACTOR OF 0.65. PILES SHALL BE INSTALLED TO ACHIEVE A FACTORED DRIVEN RESISTANCE EQUAL TO OR GREATER THAN THE FACTORED AXIAL DESIGN LOAD. ONE INDICATOR PILE WITHIN SPAN 1 AND 4 EQUALLY SPACED INDICATOR PILES WITH SPAN 2 SHALL BE TESTED DURING THE END OF INITIAL DRIVING WITH A PDA FOLLOWED BY A CAPWAP ANALYSIS TO DETERMINE THE PILE DRIVING ACCEPTANCE CRITERIA.
5. THE CONTRACTOR SHALL SUBMIT A PILE SCHEDULE, PILE INSTALLATION, AND PILE DRIVING/TESTING PLAN FOR REVIEW AND APPROVAL OF THE ENGINEER.

SEPT. 19, 2015	ISSUED FOR CONSTRUCTION
DATE	DESCRIPTION
USE ONLY PRINTS OF LATEST DATE	

604531_(A02034)BR9.DWG Plotted on 9-Oct-2015 1:54 PM
Final Structural Submittal (SF) 19-September-2015

MAYNARD & ACTON
ASSABET RIVER RAIL TRAIL

STATE	FED. AID PROJ. NO.	SHEET NO.	TOTAL SHEETS
MA	CMAQ/STP-TE-002S(836)	18	230
PROJECT FILE NO.	604531		

CONSTRUCTION BASELINE TIES

604531_HD(SC).DWG Plotted on 8-Oct-2015 12:56 PM

ARRT CONSTRUCTION BASELINE DATA

NUMBER	STARTING STATION	NORTHING	EASTING	CURVE DATA	LINE DATA	ENDING STATION	NORTHING	EASTING
L13	45+84.97	2981483.298	666565.038		N55° 03' 17"E 396.42'	49+81.39	2981710.367	666889.984
L14	49+81.39	2981710.367	666889.984		N34° 56' 14"W 91.71'	50+73.10	2981785.546	666837.465
L15	50+73.10	2981785.546	666837.465		N62° 33' 35"E 268.15'	53+41.25	2981909.115	667075.444
C21	53+41.25	2981909.115	667075.444	R=1000.00' Δ=6°17'55" L=109.93' T=55.02'		54+51.18	2981965.029	667170.028
C22	54+51.18	2981965.029	667170.028	R=491.00' Δ=19°14'00" L=164.82' T=83.19'		56+16.00	2982032.073	667319.751
L16	56+16.00	2982032.073	667319.751		N75° 29' 40"E 28.29'	56+44.29	2982039.159	667347.139
L17	56+44.29	2982039.159	667347.139		N14° 30' 20"W 44.00'	56+88.29	2982081.756	667336.118

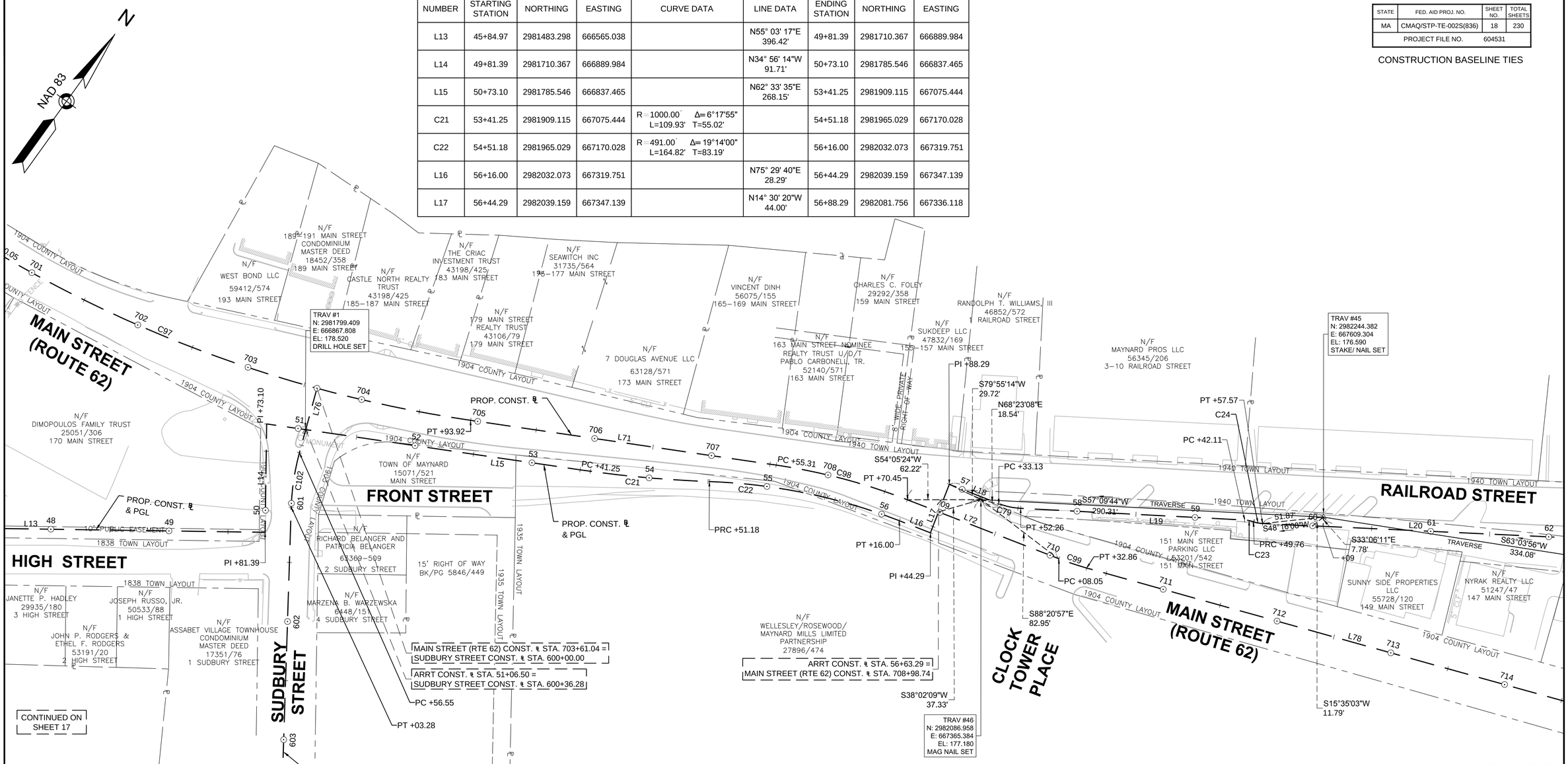

ARRT CONSTRUCTION BASELINE DATA

NUMBER	STARTING STATION	NORTHING	EASTING	CURVE DATA	LINE DATA	ENDING STATION	NORTHING	EASTING
L18	56+88.29	2982081.756	667336.118		N75° 29' 40"E 44.84'	57+33.13	2982092.987	667379.529
C79	57+33.13	2982092.987	667379.529	R=60.00' Δ=18°16'22" L=19.14' T=9.65'		57+52.26	2982100.629	667396.983
L19	57+52.26	2982100.629	667396.983		N57° 13' 18"E 189.84'	59+42.11	2982203.407	667556.597
C23	59+42.11	2982203.407	667556.597	R=27.00' Δ=16°14'51" L=7.66' T=3.85'		59+49.76	2982206.590	667563.533
C24	59+49.76	2982206.590	667563.533	R=27.00' Δ=16°34'20" L=7.81' T=3.93'		59+57.57	2982209.857	667570.596
L20	59+57.57	2982209.857	667570.596		N56° 53' 49"E 259.26'	62+16.83	2982351.452	667787.778

0 40 100 160
SCALE: 1" = 40'

NOTE:
1. SEE SHEETS 29-30 FOR ADDITIONAL BASELINE INFORMATION.