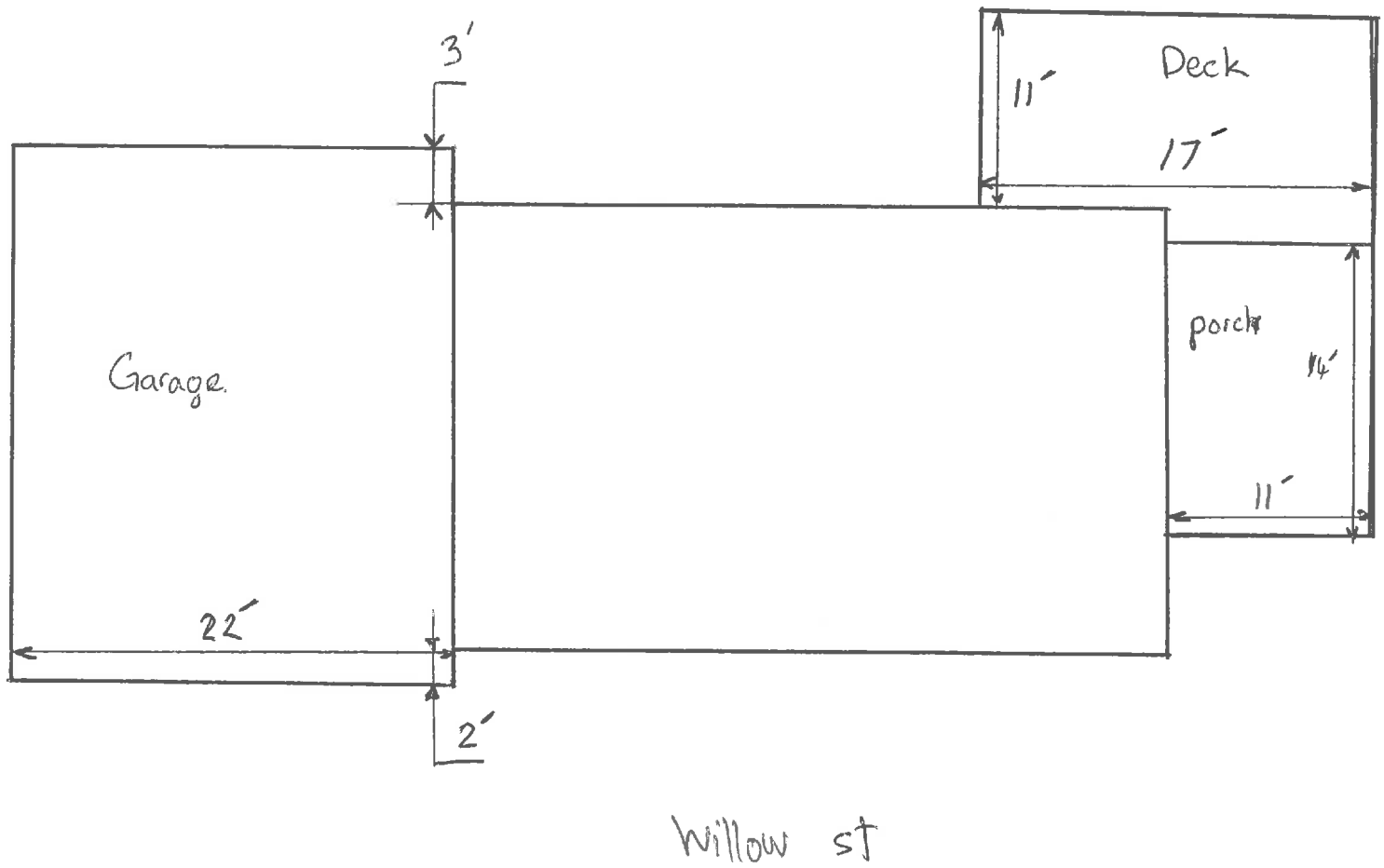
3'
11'
Deck
17'
Garage
porch
14'
11'
22'
2'
Willow st