EROSION & SEDIMENT CONTROL NOTES

1. ALL SEDIMENT AND EROSION CONTROL MEASURES SHALL BE DONE AS SET FORTH IN THE MOST CURRENT STATE SEDIMENT AND EROSION CONTROL MANUAL.
2. THOSE AREAS UNDERGOING ACTUAL CONSTRUCTION WILL BE LEFT IN AN UNTREATED OR UNVEGETATED CONDITION FOR A MINIMUM TIME. AREAS SHALL BE PERMANENTLY STABILIZED WITHIN 15 DAYS OF FINAL GRADING AND TEMPORARILY STABILIZED WITHIN 30 DAYS OF INITIAL DISTURBANCE OF THE SOIL. IF THE DISTURBANCE IS WITHIN 100 FEET OF A STREAM OR POND, THE AREA SHALL BE STABILIZED WITHIN 7 DAYS OR PRIOR TO ANY STORM EVENT (THIS WOULD INCLUDE WETLANDS).
3. SEDIMENT BARRIERS (SILT FENCE, STRAW BARRIERS, ETC.) SHOULD BE INSTALLED PRIOR TO ANY SOIL DISTURBANCE OF THE CONTRIBUTING DRAINAGE AREA ABOVE THEM. MULCH NETTING SHALL BE USED TO ANCHOR MULCH IN ALL AREAS WITH SLOPES GREATER THAN 15% AFTER OCTOBER 1ST THE SAME APPLIES FOR ALL SLOPES GREATER THAN 8%.
4. INSTALL SILTATION BARRIER AT TOE OF SLOPE TO FILTER SILT FROM RUNOFF. SEE SILTATION BARRIER DETAILS FOR PROPER INSTALLATION. SILTATION BARRIER WILL REMAIN IN PLACE PER NOTE #5.
5. ALL EROSION CONTROL STRUCTURES WILL BE INSPECTED, REPLACED AND/OR REPAIRED EVERY 7 DAYS AND IMMEDIATELY FOLLOWING ANY SIGNIFICANT RAINFALL OR SNOW MELT OR WHEN NO LONGER SERVICEABLE DUE TO SEDIMENT ACCUMULATION OR DECOMPOSURE. SEDIMENT DEPOSITS SHOULD BE REMOVED AFTER EACH STORM EVENT. THEY MUST BE REMOVED WHEN DEPOSITS REACH APPROXIMATELY ONE HALF THE HEIGHT OF THE BARRIER. SEDIMENT CONTROL DEVICES SHALL REMAIN IN PLACE AND BE MAINTAINED BY THE CONTRACTOR UNTIL AREAS UPSLOPE ARE STABILIZED BY TURF.
6. NO SLOPES, EITHER PERMANENT OR TEMPORARY, SHALL BE STEEPER THAN TWO TO ONE (2:1).
7. IF FINAL SEEDING OF THE DISTURBED AREAS IS NOT COMPLETED 45 DAYS PRIOR TO THE FIRST KILLING FROST, USE TEMPORARY MULCH (DORMANT SEEDING MAY BE ATTEMPTED AS WELL) TO PROTECT THE SITE AND DELAY SEEDING UNTIL THE NEXT RECOMMENDED SEEDING PERIOD.
8. TEMPORARY SEEDING OF DISTURBED AREAS THAT HAVE NOT BEEN FINAL GRADED SHALL BE COMPLETED 45 DAYS PRIOR TO THE FIRST KILLING FROST TO PROTECT FROM SPRING RUNOFF PROBLEMS.
9. DURING THE CONSTRUCTION PHASE, INTERCEPTED SEDIMENT WILL BE RETURNED TO THE SITE AND REGRADED ONTO OPEN AREAS.
10. REVEGETATION MEASURES WILL COMMENCE UPON COMPLETION OF CONSTRUCTION EXCEPT AS NOTED ABOVE. ALL DISTURBED AREAS NOT OTHERWISE STABILIZED WILL BE GRADED, SMOOTHED, AND PREPARED FOR FINAL SEEDING AS FOLLOWS:

10.1. SIX INCHES OF LOAM WILL BE SPREAD OVER DISTURBED AREAS AND SMOOTHED TO A UNIFORM SURFACE.

10.2. APPLY LIMESTONE AND FERTILIZER ACCORDING TO SOIL TEST. IF SOIL TESTING IS NOT FEASIBLE ON SMALL OR VARIABLE SITES, OR WHERE TIMING IS CRITICAL, FERTILIZER MAY BE APPLIED AT THE RATE OF 800 LB PER ACRE OR 18.4 LB PER 1,000 SF USING 10-20-20 OR EQUIVALENT. APPLY GROUND LIMESTONE (EQUIVALENT TO 50% CALCIUM PLUS MAGNESIUM OXIDE) AT A RATE OF 3 TONS PER ACRE (138 LB PER1,000 SF).

10.3. FOLLOWING SEED BED PREPARATION, DITCHES AND BACK SLOPES WILL BE SEEDED TO A MIXTURE OF 47% CREEPING RED FESCUE, 5% REDTOP, AND 48% TALL FESCUE. THE LAWN AREAS WILL BE SEEDED TO A PREMIUM TURF MIXTURE OF 44% KENTUCKY BLUE-GRASS, 44% CREEPING RED FESCUE, AND 12% PERENNIAL RYEGRASS: SEEDING RATE IS 1.03 LBS PER 1,000 SF LAWN QUALITY SOD MAY BE SUBSTITUTED FOR SEED.

10.4. STRAW MULCH AT THE RATE OF 70-90 LBS PER 1,000 SF. A HYDRO-APPLICATION OF WOOD OR PAPER FIBER SHALL BE APPLIED FOLLOWING SEEDING. A SUITABLE BINDER SUCH AS CURASOL OR RMB PLUS WILL BE USED ON STRAW MULCH FOR WIND CONTROL.

11. ALL TEMPORARY EROSION CONTROL MEASURES SHALL BE REMOVED ONCE THE SITE IS STABILIZED.
12. WETLANDS WILL BE PROTECTED W/strawBALES AND/OR SILT FENCE INSTALLED AT THE EDGE OF THE WETLAND OR THE BOUNDARY OF WETLAND DISTURBANCE.
13. ALL AREAS WITHIN 100 FEET OF A FLAGGED WETLAND OR STREAM SHALL HAVE AN EXPOSURE WINDOW OF NOT MORE THAN 7 DAYS.
14. ALL AREAS WITHIN 100 FEET OF A FLAGGED WETLAND OR STREAM SHALL FOLLOW APPROPRIATE EROSION CONTROL MEASURES PRIOR TO EACH STORM IF NOT BEING ACTIVELY WORKED,

MULCH

LOCATION	MULCH	RATE (1000 SF)
PROTECT AREA	STRAW	100 POUNDS
WINDY AREA	SHREDDED OR CHOPPED CORNSTALKS STRAW (ANCHORED)*	185-275 POUNDS 100 POUNDS
MODERATE TO HIGH VELOCITY AREAS OR STEEP SLOPES GREATER THAN 3:1	JUTE MESH OR EXCELSIOR MAT	AS REQUIRED
GREATER THAN 3:1	(REFER TO GEOTECHNICAL REPORT FOR FINAL DESIGN REQUIREMENT)	

* A HYDRO-APPLICATION OF WOOD, OR PAPER FIBER MAY BE APPLIED FOLLOWING SEEDING. A SUITABLE BINDER SUCH AS CURASOL OR RMB PLUS SHALL BE USED ON straw MULCH FOR WIND CONTROL.

MULCH ANCHORING
ANCHOR MULCH WITH PEG AND TWINE (1 SQ. YD/BLOCK); MULCH NETTING (AS PER MANUFACTURER); WOOD CELLULOSE FIBER (750 LBS/ACRE); CHEMICAL TACK (AS PER MANUFACTURER'S SPECIFICATIONS); USE OF A SERRATED STRAIGHT DISK. WETTING FOR SMALL AREAS AND ROAD DITCHES MAY BE PERMITTED.

EROSION CONTROL NOTES DURING WINTER CONSTRUCTION

1. WINTER CONSTRUCTION PERIOD: NOVEMBER 1 THROUGH APRIL 15.
2. WINTER EXCAVATION AND EARTHWORK SHALL BE DONE SUCH THAT NO MORE THAN 1 ACRE OF THE SITE IS WITHOUT STABILIZATION AT ANY ONE TIME.
3. EXPOSED AREA SHOULD BE LIMITED TO THAT CAN BE MULCHED IN ONE DAY PRIOR TO ANY SNOW EVENT.
4. CONTINUATION OF EARTHWORK OPERATION ON ADDITIONAL AREAS SHALL NOT BEGIN UNTIL THE EXPOSED SOIL SURFACE ON THE AREA BEING WORKED HAS BEEN STABILIZED SUCH THAT NO LARGER AREA OF THE SITE IS WITHOUT EROSION CONTROL PROTECTION AS LISTED IN ITEM 2 ABOVE.
5. AN AREA SHALL BE CONSIDERED TO HAVE BEEN STABILIZED WHEN EXPOSED SURFACES HAVE BEEN EITHER MULCHED WITH STRAW OR straw AT A RATE OF 100 LB. PER 1,000 SQUARE FEET (WITH OR WITHOUT SEEDING) OR DORMANT SEEDED, MULCHED AND ADEQUATELY ANCHORED BY AN APPROVED ANCHORING TECHNIQUE.
6. BETWEEN THE DATES OF OCTOBER 15 AND APRIL 1ST, LOAM OR SEED WILL NOT BE REQUIRED. DURING PERIODS OF ABOVE FREEZING TEMPERATURES THE SLOPES SHALL BE FINE GRADED AND EITHER PROTECTED WITH MULCH OR TEMPORARILY SEEDED AND MULCHED UNTIL SUCH TIME AS THE FINAL TREATMENT CAN BE APPLIED. IF THE DATE IS AFTER NOVEMBER 1ST AND IF THE EXPOSED AREA HAS BEEN LOAMED, FINAL GRADED AND IS SMOOTH, THEN THE AREA MAY BE DORMANT SEEDED AT A RATE OF 200 - 300% HIGHER THAN SPECIFIED FOR PERMANENT SEED AND THEN MULCHED. IF CONSTRUCTION CONTINUES DURING FREEZING WEATHER, ALL EXPOSED AREAS SHALL BE CONTINUOUSLY GRADED BEFORE FREEZING AND THE SURFACE TEMPORARILY PROTECTED FROM EROSION BY THE APPLICATION OF MULCH. SLOPES SHALL NOT BE LEFT UNEXPOSED OVER THE WINTER OR ANY OTHER EXTENDED TIME OF WORK SUSPENSION UNLESS TREATED IN THE ABOVE MANNER. UNTIL SUCH TIME AS WEATHER CONDITIONS ALLOW DITCHES TO BE FINISHED WITH THE PERMANENT SURFACE TREATMENT, EROSION SHALL BE CONTROLLED BY THE INSTALLATION OF BALES OF straw OR STONE CHECK DAMS IN ACCORDANCE WITH THE STANDARD DETAILS.
7. MULCHING REQUIREMENTS:

7.1. BETWEEN THE DATES OF NOVEMBER 1ST AND APRIL 15TH ALL MULCH SHALL BE ANCHORED BY EITHER PEG LINE, MULCH NETTING OR WOOD CELLULOSE FIBER.

7.2. MULCH NETTING SHALL BE USED TO ANCHOR MULCH IN ALL DRAINAGE WAYS WITH A SLOPE GREATER THAN 3% FOR SLOPE EXPOSED TO DIRECT WINDS AND FOR ALL OTHER SLOPES GREATER THAN 8%.

7.3. MULCH NETTING SHALL BE USED TO ANCHOR MULCH IN ALL AREAS WITH SLOPES GREATER THAN 15% AFTER OCTOBER 1ST THE SAME APPLIES FOR ALL SLOPES GREATER THAN 8%.

8. AFTER NOVEMBER 1ST THE CONTRACTOR SHALL APPLY DORMANT SEEDING OR MULCH AND ANCHORING ON ALL BARE EARTH AT THE END OF EACH WORKING DAY.
9. DURING THE WINTER CONSTRUCTION PERIOD ALL SNOW SHALL BE REMOVED FROM AREAS OF SEEDING AND MULCHING PRIOR TO PLACEMENT.
10. STOCKPILING OF MATERIALS (DIRT, WOOD, CONSTRUCTION MATERIALS, ETC.) MUST REMAIN COVERED AT ALL TIMES TO MINIMIZE ANY DUST PROBLEMS THAT MAY OCCUR WITH ADJACENT PROPERTIES AND TO PROVIDE MAXIMUM PROTECTION AGAINST EROSION RUNOFF.
11. EXISTING CATCH BASIN STRUCTURES SHALL BE PROTECTED UNTIL SUCH TIME AS THEY ARE REMOVED.

Know what's below. Call before you dig.

DATE OF APPROVAL: ____________

DATE OF ENDORSEMENT: ____________

CONSTRUCTION SEQUENCE

THE FOLLOWING CONSTRUCTION SEQUENCE IS RECOMMENDED:

-INSTALLATION OF STABILIZED CONSTRUCTION ENTRANCE/EXIT (AS SHOWN)

-INSTALLATION OF EROSION CONTROL BARRIER (STRAW BALES AND SILT FENCE) (AS SHOWN)

-INSTALLATION OF INLET PROTECTION IN STREET (AS SHOWN)

-DEMOLITION OF EXISTING SITE STRUCTURES (SEE DEMOLITION PLAN)

-DEMOLITION OF EXISTING SITE PAVEMENT AND AMENITIES (SEE DEMOLITION PLAN)

-CLEARING AND GRUBBING

-INSTALLATION OF TEMPORARY SWALES AND SEDIMENT BASINS

-EARTHWORK AND EXCAVATION/FILLING AS NECESSARY

-CONSTRUCTION OF UTILITIES

-STABILIZE PERMANENT LAWN AREAS AND SLOPES WITH TEMPORARY SEEDING

-INSTALLATION OF INLET PROTECTION ON ON-SITE UTILITIES (AS SHOWN)

-CONSTRUCTION OF BUILDINGS

-CONSTRUCTION OF ALL CURBING AND LANDSCAPE ISLANDS AS INDICATED ON THE PLANS

-SPREAD TOPSOIL ON SLOPED AREAS AND SEED AND MULCH

-FINAL GRADING OF ALL SLOPED AREAS

-PLACE 6" TOPSOIL ON SLOPES AFTER FINAL GRADING COMPLETED. FERTILIZE, SEED, AND MULCH SEED MIXTURE TO BE INSTALLED REQUIRED.

-REMOVAL OF THE TEMPORARY SEDIMENT BASINS

-PAVE PARKING LOT

-LANDSCAPING PER LANDSCAPING PLAN

-REMOVE EROSION CONTROLS AS DISTURBED AREAS BECOME STABILIZED TO 70% STABLIZATION OR GREATER.

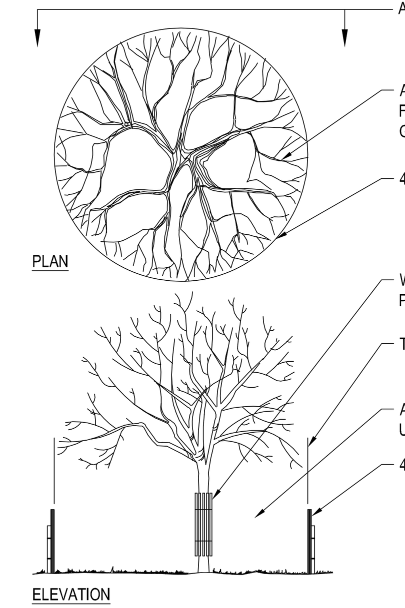

TREE PROTECTION DURING CONSTRUCTION

N.T.S.

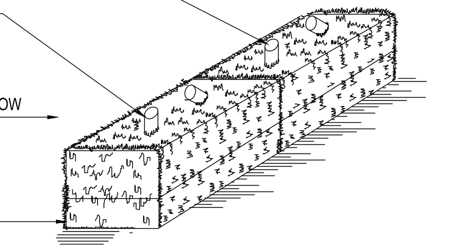

DRAINAGE AREA NO MORE THAN 1/4 AC. PER 100 FEET OF STRAW BALE DIKE FOR SLOPES LESS THAN 25%

NOTES:
1. BALES SHALL BE PLACED AT THE TOP OF A SLOPE OR ON THE CONTOUR AND IN A ROW WITH ENDS TIGHTLY ABUTTING THE ADJACENT BALES.
2. EACH BALE SHALL BE PLACED SO THE BINDINGS ARE HORIZONTAL.
3. BALES SHALL BE SECURELY ANCHORED IN PLACE BY EITHER TWO STAKES OR RE-BARS DRIVEN THROUGH THE BALE. THE FIRST STAKE IN EACH BALE SHALL BE DRIVEN TOWARD THE PREVIOUSLY LAID BALE AT AN ANGLE TO FORCE THE BALES TOGETHER. STAKES SHALL BE DRIVEN FLUSH WITH THE BALE.
4. INSPECTION SHALL BE FREQUENT AND REPAIR REPLACEMENT SHALL BE PROMPTLY AS NEEDED.
5. BALES SHALL BE REMOVED WHEN THEY HAVE SERVED THEIR USEFULNESS SO AS NOT TO BLOCK OR IMPEDE STORM FLOW OR DRAINAGE.

STRAW BALE DETAIL

N.T.S.

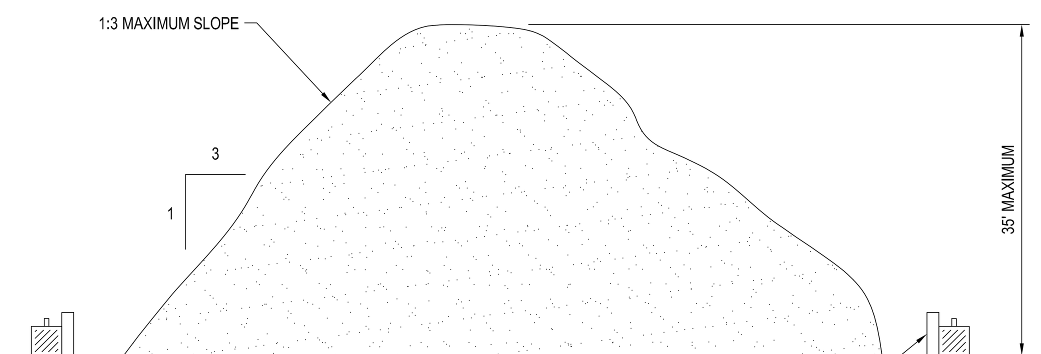

TEMPORARY STOCKPILE DETAIL

N.T.S.

INSTALLATION:
1. EXCAVATE A 6"x 6" TRENCH ALONG THE LINE OF EROSION CONTROL OF THE SITE.
2. UNROLL SILTATION FENCE AND POSITION THE POSTS AGAINST THE BACK (DOWNSTREAM) WALL OF THE TRENCH (NET SIDE AWAY FROM FLOW DIRECTION).
3. DRIVE THE POST INTO THE GROUND UNTIL THE NETTING IS LAYING ACROSS THE TRENCH BOTTOM.
4. LAY THE TOE-IN FLAP OF THE FABRIC ONTO THE UNDISTURBED BOTTOM OF THE TRENCH, BACKFILL THE TRENCH AND TAMP THE SOIL. TOE-IN CAN ALSO BE ACCOMPLISHED BY LAYING FABRIC FLAP ON UNDISTURBED GROUND AND PILING & TAMP- ING FILL AT THE BASE.

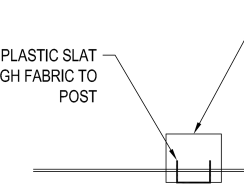

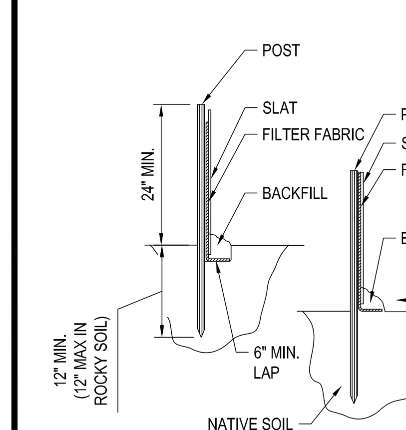

TOE-IN METHODS

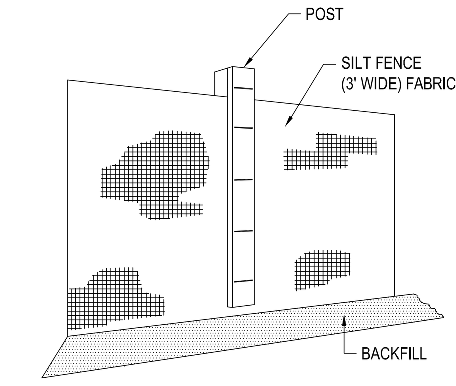

PERSPECTIVE OF FENCE

TYP. SILTATION FENCE DETAIL

N.T.S.

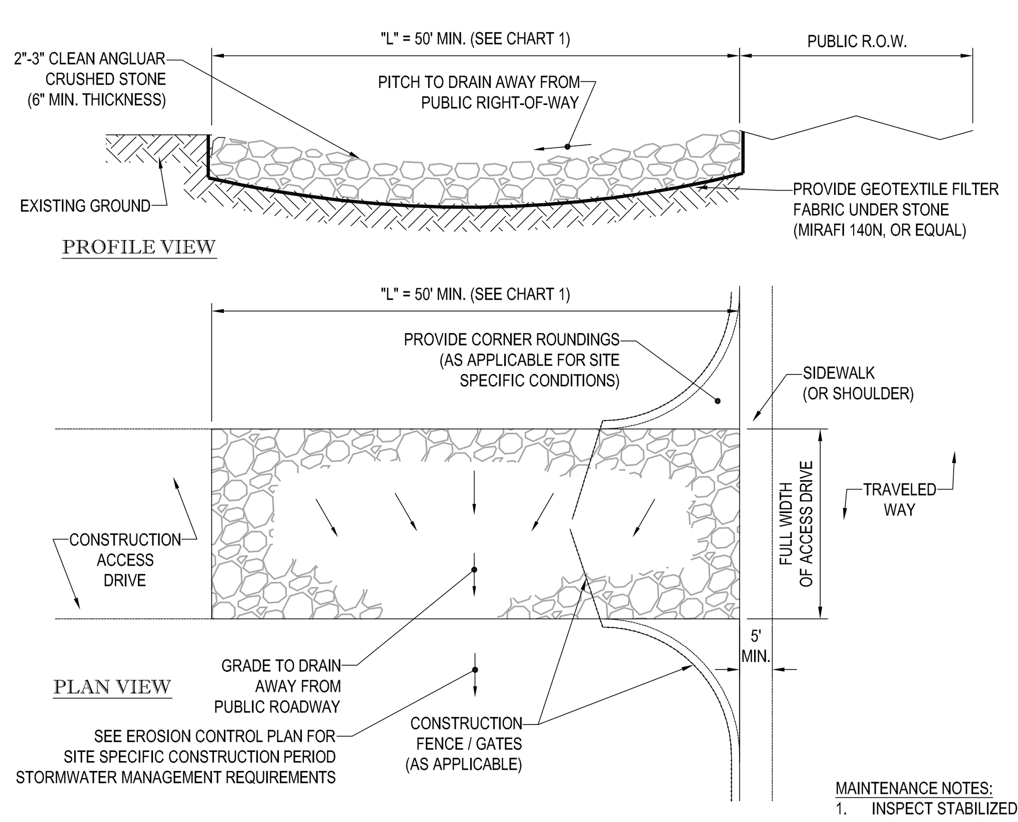

CHART 1

PERCENT SLOPE OF ROADWAY	LENGTH OF STONE REQUIRED	
	COARSE GRAINED SOILS	FINE GRAINED SOILS
0 TO 2%	50 FT	100 FT
2% TO 5%	100 FT	200FT
>5%	ENTIRE ENTRANCE STABILIZED WITH FABC BASE COURSE (1)	

(1) AS PRESCRIBED BY LOCAL ORDINANCE OR OTHER GOVERNING AUTHORITY.

MAINTENANCE NOTES:
1. INSPECT STABILIZED CONSTRUCTION ENTRANCE / ANTI-TRACKING PAD AND SEDIMENT DISPOSAL AREA WEEKLY OF AFTER EVERY MAJOR RAIN STORM EVENT.
2. WASH WATER (IF USED) SHALL BE DIRECTED TOWARD A SEDIMENT TRAP, SUFFICIENTLY SIZED FOR SPECIFIC SITE CONDITIONS.
3. EXCESSIVELY MUD-CLOGGED STONE SHALL BE REMOVED AND REPLACED, AS NEEDED.

STABILIZED CONSTRUCTION EXIT

N.T.S.

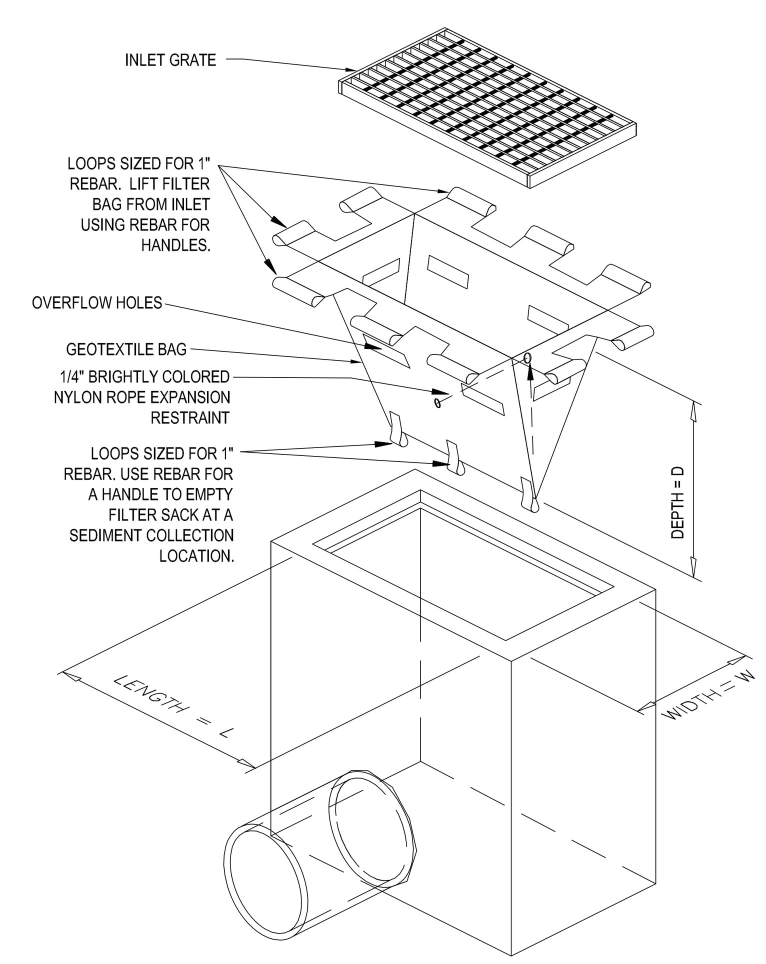

ISOMETRIC VIEW

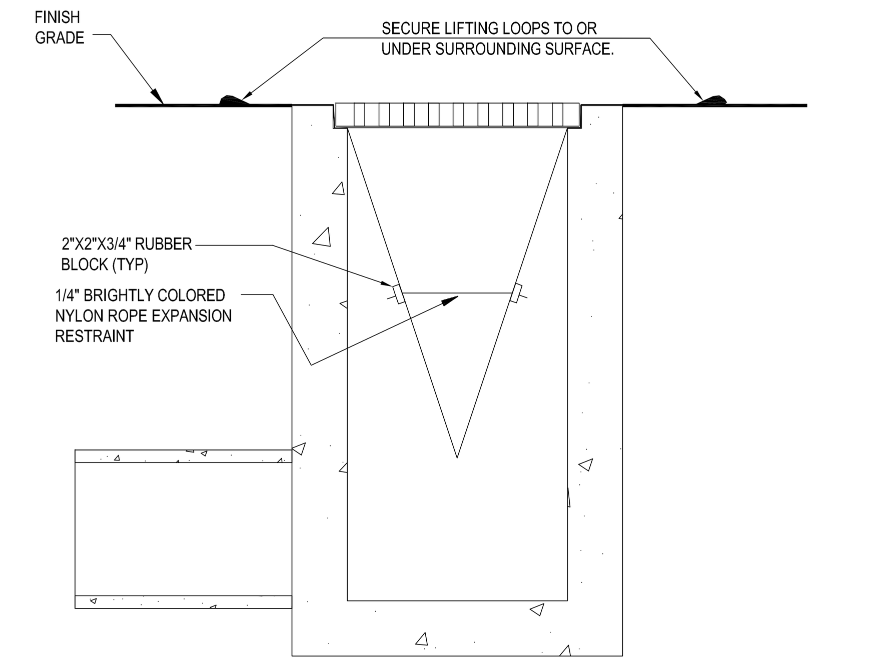

SECTION VIEW
PROFILE VIEW OF INSTALLED FILTER SACK

LOW TO MODERATE FLOW GEOTEXTILE FABRIC SPECIFICATION TABLE		
PROPERTIES	TEST METHOD	UNITS
GRAB TENSILE STRENGTH	ASTM D-4632	300 LBS
GRAB TENSILE ELONGATION	ASTM D-4632	20 %
PUNCTURE	ASTM D-4833	120 LBS
MULLEN BURST	ASTM D-3786	800 PSI
TRAPEZOID TEAR	ASTM D-4533	120 LBS
UV RESISTANCE	ASTM D-4355	80 %
APPARENT OPENING SIZE	ASTM D-4751	40 US SIEVE
FLOW RATE	ASTM D-4491	40 GAL/MIN/SQ FT
PERMITTIVITY	ASTM D-4491	0.55 SEC -1

MODERATE TO HIGH FLOW GEOTEXTILE FABRIC SPECIFICATION TABLE		
PROPERTIES	TEST METHOD	UNITS
GRAB TENSILE STRENGTH	ASTM D-4632	265 LBS
GRAB TENSILE ELONGATION	ASTM D-4632	20 %
PUNCTURE	ASTM D-4833	135 LBS
MULLEN BURST	ASTM D-3786	420 PSI
TRAPEZOID TEAR	ASTM D-4533	45 LBS
UV RESISTANCE	ASTM D-4355	90 %
APPARENT OPENING SIZE	ASTM D-4751	20 US SIEVE
FLOW RATE	ASTM D-4491	200 GAL/MIN/SQ FT
PERMITTIVITY	ASTM D-4491	1.5 SEC -1

1. REMOVE TRAPPED SEDIMENT WHEN BRIGHTLY COLORED EXPANSION RESTRAINT CAN NO LONGER BE SEEN.
2. GEOTEXTILE SHALL BE A WOVEN POLYPROPYLENE FABRIC THAT MEETS OR EXCEEDS REQUIREMENTS IN THE SPECIFICATIONS TABLE.
3. PLACE AN OIL ADSORBENT PAD OR PILLOW OVER INLET GRATE WHEN OIL SPILLS ARE A CONCERN.
4. INSPECT PER REGULATORY REQUIREMENTS.
5. THE WIDTH, "W", OF THE FILTER SACK SHALL MATCH THE INSIDE WIDTH OF THE GRATED INLET BOX.
6. THE DEPTH, "D", OF THE FILTER SACK SHALL BE BETWEEN 18 INCHES AND 36 INCHES
7. THE LENGTH, "L", OF THE FILTER SACK SHALL MATCH THE INSIDE LENGTH OF THE GRATED INLET BOX.

DO NOT USE IN PAVED AREAS WHERE PONDING MAY CAUSE TRAFFIC HAZARDS.

TO BE USED IN EXISTING RIGHT OF WAY

FILTER SACKS (GRATED INLETS)

N.T.S.

BOHLER ENGINEERING™
SITE CIVIL AND CONSULTING ENGINEERING
LAND SURVEYING PROGRAM MANAGEMENT LANDSCAPE ARCHITECTURE
SUSTAINABLE DESIGN PERMITTING SERVICES TRANSPORTATION SERVICES
UPSTATE NEW YORK
NEW ENGLAND
BOSTON, MA
NEW YORK METRO
NEW YORK, NY
NEW JERSEY
PHILADELPHIA, PA
LEHIGH VALLEY, PA
SOUTHEASTERN, PA
REHOBOTH BEACH, DE
BALTIMORE, MD
SOUTHERN MARYLAND
NORTHERN VIRGINIA
CENTRAL VIRGINIA
RALEIGH, NC
CHARLOTTE, NC
TAMPA, FL
SOUTH FLORIDA

THE INFORMATION, DESIGN AND CONTENT OF THIS PLAN ARE PROPRIETARY AND SHALL NOT BE COPIED OR USED FOR ANY PURPOSE WITHOUT PRIOR WRITTEN AUTHORIZATION FROM BOHLER ENGINEERING. ONLY APPROVED, SIGNED AND SEALED PLANS SHALL BE UTILIZED FOR CONSTRUCTION PURPOSES.
© BOHLER ENGINEERING, 2015/2016

REVISIONS

REV	DATE	COMMENT	BY
1	03/08/16	REVISED PER NEW SURVEY	CFD
2	09/06/16	REVISED FOR DEF. SUBMISSION	KBS
3			
4			
5			
6			
7			
8			
9			
10			
11			
12			
13			
14			
15			

PROJECT No.:	W151042
DRAWN BY:	KBS
CHECKED BY:	RMM/JGS
DATE:	02/22/16
SCALE:	AS NOTED
CAD I.D.:	W151042_DEF_SUB3

PROJECT:
DEFINITIVE PLAN
OF
SOUTHEAST KELLEY'S CORNER LOTS
FOR
394 MASSACHUSETTS AVENUE , LLC

LOCATION OF SITE
MASSACHUSETTS AVENUE
TOWN OF ACTON
MIDDLESEX COUNTY,MA

BOHLER ENGINEERING
352 TURNPIKE ROAD
SOUTHBOROUGH, MA 01772
Phone: (508) 480-9900
Fax: (508) 480-9080
www.BohlerEngineering.com

J.G. SWERLING
PROFESSIONAL ENGINEER
MASSACHUSETTS LICENSE No. 41697
NEW HAMPSHIRE LICENSE No. 14695
MAINE LICENSE No. 13816
CONNECTICUT LICENSE No. 30785
RHODE ISLAND LICENSE No. 11425

SHEET TITLE:
SOIL EROSION CONTROL NOTES & DETAILS SHEET

SHEET NUMBER:
8
OF 13

REV 2 - 08/03/2016

P:\15\W151042\DWG\W151042_def_sub3.dwg , 08-Soil Erosion Notes, 10/6/2014, 4:26:00 PM, prebuck, XeroX510-1.pc3, User634, 1:1