PERMIT PLAN

RESIDENTIAL COMPOUND
WASHINGTON DRIVE
ACTON, MA

SHEET INDEX

C1 TITLE SHEET
C2 PLAN OF LOTS
C3 EXISTING CONDITIONS PLAN
C4 SITE DEVELOPMENT PLAN
C5 SITE DISTANCE PROFILE AND DETAILS

GENERAL NOTES

1. LOCATIONS OF EXISTING UNDERGROUND UTILITIES/OBSTRUCTIONS/SYSTEMS SHOWN HEREON ARE APPROXIMATE ONLY. ALL UTILITIES/OBSTRUCTIONS/SYSTEMS MAY NOT BE SHOWN. CONTRACTOR SHALL BE RESPONSIBLE FOR LOCATING AND PROTECTING ALL UNDERGROUND UTILITIES/OBSTRUCTIONS/SYSTEMS, WHETHER OR NOT SHOWN HEREON.

2. UNLESS OTHERWISE SHOWN, ALL NEW UTILITIES SHALL BE UNDERGROUND.

3. BURIED UTILITIES SHALL BE INSTALLED IN ACCORDANCE WITH THEIR RESPECTIVE COMPANY SPECIFICATIONS.

4. CONSTRUCTION LAYOUT OF BUILDING AND SITE IMPROVEMENTS SHALL BE PERFORMED BY A LICENSED PROFESSIONAL LAND SURVEYOR. LOCATIONS OF EXISTING FEATURES OR PROPOSED IMPROVEMENTS DERIVED BY SCALING DRAWINGS MAY NOT BE ACCURATE. SEE PLAN REFERENCE HEREON.

5. SAFETY MEASURES, CONSTRUCTION METHODS, AND CONTROL OF WORK SHALL BE RESPONSIBILITY OF CONTRACTOR.

6. CONTRACTOR SHALL BE RESPONSIBLE FOR REPAIR AND/OR REPLACEMENT OF ANY EXISTING UTILITY OR STRUCTURE DAMAGED DURING CONSTRUCTION THAT ARE NOT DESIGNATED FOR DEMOLITION AND/OR REMOVAL HEREON. DAMAGED UTILITY OR STRUCTURE SHALL BE REPAIRED TO THE SATISFACTION OF THEIR RESPECTIVE OWNERS.

7. ANY INTENDED REVISION OF THE HORIZONTAL AND/OR VERTICAL LOCATION OF IMPROVEMENTS TO BE CONSTRUCTED AS SHOWN HEREON SHALL BE REVIEWED AND APPROVED BY ENGINEER PRIOR TO IMPLEMENTATION.

8. CONTRACTOR SHALL NOTIFY ENGINEER UPON COMMENCEMENT OF CONSTRUCTION IN ORDER TO ENSURE THAT REQUIRED INSPECTIONS ARE PERFORMED IN A TIMELY AND EFFICIENT MANNER.

9. CONTRACTOR SHALL PROMPTLY NOTIFY ENGINEER UPON DISCOVERY OF ANY UNFORESEEN SURFACE OR SUBSURFACE CONDITIONS THAT MAY IMPACT SITE CONSTRUCTION.

10. FINISH RIM ELEVATIONS SHOULD MATCH PAVEMENT, GRADING OR LANDSCAPING, UNLESS SPECIFICALLY INDICATED OTHERWISE.

11. WHERE EXISTING UTILITY LINES/STRUCTURES ARE TO BE CUT/BROKEN DOWN/ABANDONED, LINES/STRUCTURES SHALL BE PLUGGED/CAPPED/FILLED IN ACCORDANCE WITH UTILITY OWNER REQUIREMENTS.

12. EROSION CONTROL MEASURES, SUCH AS SILT FENCE OR HAY BALES AS MAY BE SHOWN HEREON, SHALL BE INSTALLED BEFORE EARTH DISTURBANCE OCCURS WITHIN BUFFER ZONE, AND SHALL SERVE AS THE LIMIT OF WORK.

13. WHERE THE WORD "INSTALL" IS USED HEREIN, IT IS INTENDED TO DIRECT CONTRACTOR TO "FURNISH, INSTALL, AND PLACE IN OPERATION" THE COMPONENT REFERRED TO.

14. LIMITS OF WORK SHALL BE STAKED IN THE FIELD PRIOR TO COMMENCEMENT OF CONSTRUCTION.

15. ALL STORM DRAIN PIPE TO BE SMOOTH INTERIOR HDP PIPE, 2.0 PSI GASKETED JOINT, UNLESS OTHERWISE NOTED.

16. WHERE SHOWN, CONSTRUCTION NOTES ARE INTENDED TO SUMMARIZE AND CLARIFY MAJOR ITEMS OF WORK. THESE NOTES SHOULD NOT BE CONSTRUED AS AN EXHAUSTIVE LISTING OF ALL WORK REQUIRED. CONTRACTOR SHOULD CONTACT ENGINEER WHEN FURTHER CLARIFICATION OF DEPICTED WORK IS DESIRED.

17. CONSTRUCTION OF FIRE AND DOMESTIC WATER SUPPLY IMPROVEMENTS SHALL CONFORM TO TOWN OF ACTON REQUIREMENTS.

18. WHERE DIMENSIONS INVOLVE CURB, DIMENSIONS ARE TO FACE OF CURB. WHERE SLOPED GRANITE CURB OR CAPE COD BERM SPECIFIED, FACE OF CURB IS EDGE OF FINISH PAVEMENT AT TOE OF CURB.

19. NO DEBRIS, JUNK, RUBBISH OR OTHER NON-BIODEGRADABLE MATERIALS, FILL CONTAINING HAZARDOUS MATERIALS OR WASTES, OR STUMPS SHALL BE BURIED ON ANY LAND ON THIS SITE, OR LEFT ON ANY LOT OR ON THE STREET RIGHT OF WAY.

CONSTRUCTION NOTES

1. CONTRACTOR SHALL CONTACT DIG-SAFE FOR UNDERGROUND UTILITY MARKING AT 888.344.7233 AT LEAST 72 HOURS PRIOR TO COMMENCEMENT OF ANY WORK. CONTRACTOR SHALL GIVE TWENTY-FOUR (24)-HOUR NOTICE TO PERTINENT TOWN DEPARTMENTS BEFORE COMMENCING ANY WORK IN THE FIELD.

2. CONTRACTOR SHALL COORDINATE AND OBTAIN ALL CONSTRUCTION PERMITS REQUIRED BY REGULATORY AUTHORITIES.

3. CONTRACTOR SHALL BE AWARE OF ALL CONSTRUCTION REQUIREMENTS, CONDITIONS, AND LIMITATIONS IMPOSED BY PERMITS AND APPROVALS ISSUED BY REGULATORY AUTHORITIES PRIOR TO COMMENCEMENT OF ANY WORK.

WAIVER REQUESTS

Reference Code: Subdivision Rules and Regulations
Last Amended 10/15/2001

CODE SECTION	REQUIREMENT	REQUEST	SUPPORT
1. Section 8	Design Standards	Waive Compliance	Residential Compound
2. Section 9	Improvements	Waive Compliance	Residential Compound
3. Fee Schedule	$8.00 per foot of road	Waive required fee	Paved road/drive exists and will not be altered along the ROW

Reference Code: Common Drive - Rules and Regulations
Last Amended 9/10/1996

CODE SECTION	REQUIREMENT	REQUEST	SUPPORT
1. Section 1 - Section 6	Rule and regulations	Waive all compliances	Altering the existing paved driveway will require extensive grading and numerous trees to be removed along the driveway. Existing driveway will service one additional house.

ABBREVIATIONS:
ROW=Right-of-Way

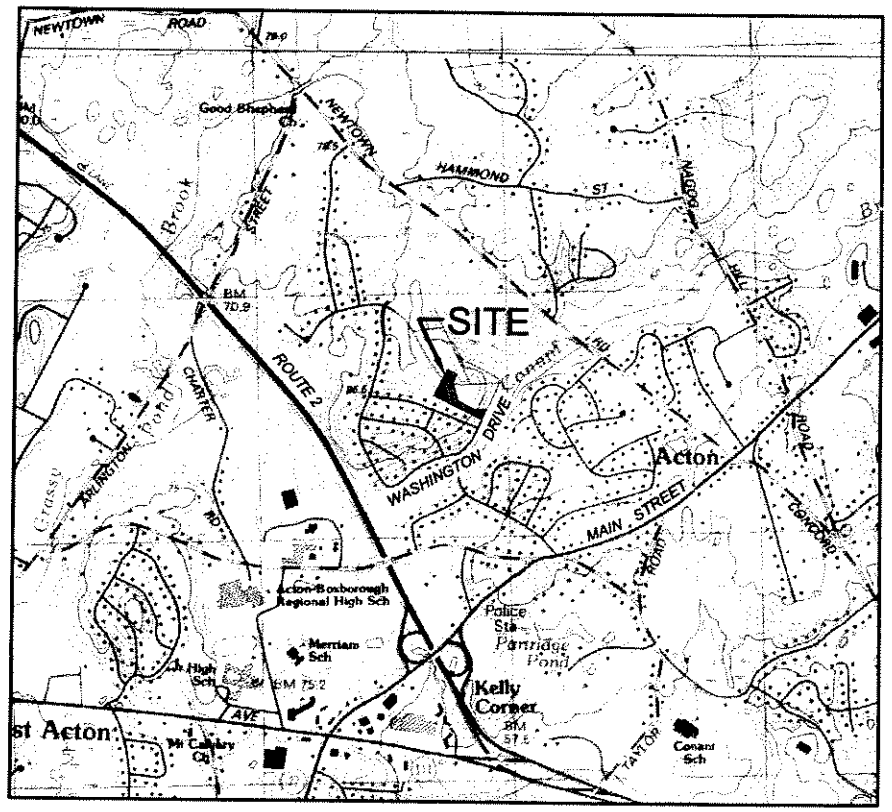

VICINITY MAP
SCALE: 1" = 1200'

SURVEY NOTES:

THE RESPONSIBILITY OF THE PROFESSIONAL LAND SURVEYOR IS LIMITED TO LAND BOUNDARY AND TOPOGRAPHIC SURVEY DATA ONLY, AS MEASURED ON THE GROUND.

PROFESSIONAL LAND SURVEYOR
PETER A. LOTHIAN, PLS
MASS. REGISTRATION #40978

ENGINEERING NOTES:

I CERTIFY THAT ALL INFORMATION ON THIS PLAN AND SUPPORTING MATERIALS WERE PREPARED UNDER MY DIRECTION, AND HAVE BEEN DESIGNED IN COMPLIANCE WITH ALL APPLICABLE ZONING AND SUBDIVISION REGULATIONS.

PROFESSIONAL CIVIL ENGINEER
BRIAN N. CONNER, PE
MASS. REGISTRATION #42705

SITE DATA

LOT AREA:	2.71± AC. (118,089± SF)
WATER SUPPLY:	MUNICIPAL
SEWAGE DISPOSAL:	INDIVIDUAL ONSITE SEWAGE DISPOSAL SYSTEMS
EXISTING STREET CLASSIFICATION:	COLLECTOR

ELEVATION DATUM

DATUM: NGVD 1929 BM NO. 1

REGULATORY NOTES

1. ALL SUPPLEMENTARY DATA SUBMITTED UNDER THE RULES ARE AN INTEGRAL PART OF THE DEFINITIVE PLAN AND THAT NONCOMPLIANCE WITH THE PLAN PROFILES, UTILITIES, LAYOUTS AND RESTRICTIVE COVENANTS WILL VOID THE APPROVAL STATUS, UNLESS, A WAIVER IS SPECIFICALLY APPROVED BY THE BOARD IN WRITING.

2. THE APPROVED DEFINITIVE SUBDIVISION PLAN OF A RESIDENTIAL COMPOUND SHALL CONTAIN CONDITIONS THAT THERE SHALL BE NO FURTHER DIVISION OF THE TRACT OF LOTS CONTAINED THEREIN; DEVELOPMENT OF THE LAND IS PERMITTED ONLY IN ACCORDANCE WITH THE LAND USES INDICATED THEREON.

ASSESSORS REFERENCE

ASSESSORS MAP E-3, PARCEL 88
OWNER PER ASSESSOR RECORD:
GUIDO AND HELENE GAGLIANO
17 WASHINGTON DRIVE
ACTON, MA 01720

ZONING

17 Washington Drive
Acton, MA 01720

Map: E-3
Block: NA
Lot: 88

Proposed Use: Residential

Parameter	Section [1]	Requirement	Remarks
Zoning District	2.1	R-2	Residence 2
Overlay District	4.3.2.3	allowed	groundwater protection district zone 4
Proposed Use	3.3.1	allowed	
Lot Area	5.2.1	20,000 SF	
Frontage	5.2.2	150 FT	see note [2] & [3] below
Lot Width	5.2.3	50 FT	
Yard			
Front	5.2.4	30 FT	
Side	5.2.5	10 FT	
Rear	5.2.5	10 FT	
Building Height	5.2.7	36 FT	
Building Coverage	5.2.6	NR	Footprint / total lot area
Floor Area Ratio	5.2	NR	GFA / total lot area
Open Space	4.2	30% min.	can't include driveways, off street parking or walks
Parking	6.3.1.1	2 spaces per dwelling	
Wetlands Setback	local bylaw	additional setbacks [note 4]	none on site
MDEP Riverfront Area		within 200 feet of riverbank	none on site
FEMA Floodplain			none on site
ACEC			none on site
Zone 1 Protective Radius			none on site
Mapped Zone 2			none on site
IWPA			none on site

NOTES:
[1] Reference to section of Zoning Bylaw, where applicable.
[2] On corner lots, frontage meeting the minimum requirement must be provided on only one street.
[3] 5.3.3 Frontage Exceptions -The minimum lot frontage may be reduced by 50 ft per lot provided that the minimum lot area required for each such lot is doubled.
[4] 0 ft setback for wetland-dependant structures, 25 ft undistrubed buffer area, 40 ft setback to the edge of driveways, and structures, 40 ft chemical free area (no fertilizers, herbicides, pesticides, 100 ft setback for underground storage

ABBREVIATIONS:
SF=square feet; CF=cubic feet; FT=feet; GFA=gross floor area; AC=acres; PB=Planning Board; ZBA=Zoning Board of Appeals; IWPA=interim wellhead protection area; ACEC=Area of Critical Environmental Concern; FIRM=Flood Insurance Rate Map; MDEP=Massachusetts Dept of Environmental Protection

PLAN REFERENCES

1. "DEFINITIVE SUBDIVISION OF LAND IN ACTON, MA" PREPARED BY CHARLES A. PERKINS CPO., INC., DATED SEPTEMBER 1979; PLAN 221 OF 1980.

2. "SUBDIVISION PLAN OF PATRIOTS HILL (SEC. III) IN ACTON, MA" PREPARED BY EVERETT M. BROOKS CO., DATED JUNE 21, 1986; PLAN 210 OF 1987.

3. "DEFINITIVE PLAN OF PATRIOTS HILL (SEC-IV) IN ACTON, MA" P PREPARED BY ACTON SURVEY & ENGINEERING, INC., DATED JUNE 21, 1989; PLAN #42 OF 1971.

4. "GLENBROOKE RUN – DEFINITIVE PLAN OF LAND ON JACKSON DRIVE & JACKSON DRIVE EXT." PREPARED BY ACTON SURVEY & ENGINEERING INC., DATED MARCH 2002/REV JUNE 2002; PLAN 776 OF 2002 .

APPROVED BY THE
ACTON PLANNING BOARD

_____ CHAIR
_____ APPLICATION FILED _____
_____ HEARING DATE _____
_____ PLAN APPROVED _____

DRAWING ISSUED FOR:

☐ CONCEPT ☐ CONSTRUCTION
■ PERMIT ☐ CONSTRUCTION RECORD

THIS DRAWING MAY NOT SHOW CONSTRUCTION DETAILS AND SPECIFICATIONS FOR ALL PROPOSED IMPROVEMENTS, AND MAY NOT IDENTIFY ALL CONSTRUCTION WORK ITEMS/AREAS OF CONTRACTOR JURISDICTION.

NO.	DATE	BY	APP.	DESCRIPTION

GPR Engineering Solutions for Land & Structures
GOLDSMITH, PREST & RINGWALL, INC.
39 MAIN STREET, SUITE 301, AYER, MA 01432
CIVIL & STRUCTURAL ENGINEERING • LAND SURVEYING & LAND PLANNING
VOICE: 978.772.1590 FAX: 978.772.1591
www.gpr-inc.com

RESIDENTIAL COMPOUND

TITLE SHEET

17 WASHINGTON DRIVE
ACTON, MA

PREPARED FOR:
GUIDO GAGLIANO
17 WASHINGTON DRIVE
ACTON, MA 01720

DES. BY: MEG	DATE: FEBRUARY 2005	JOB 00159	C1
CHK. BY: BNC			

2005 © COPYRIGHT GOLDSMITH, PREST & RINGWALL, INC.

\\GPR2600\PROJECTS\00-----\00159\DWG\PERMIT\PERMIT_01.DWG 02-28-05 1:54:05 PM -- LAYOUT: TITLE

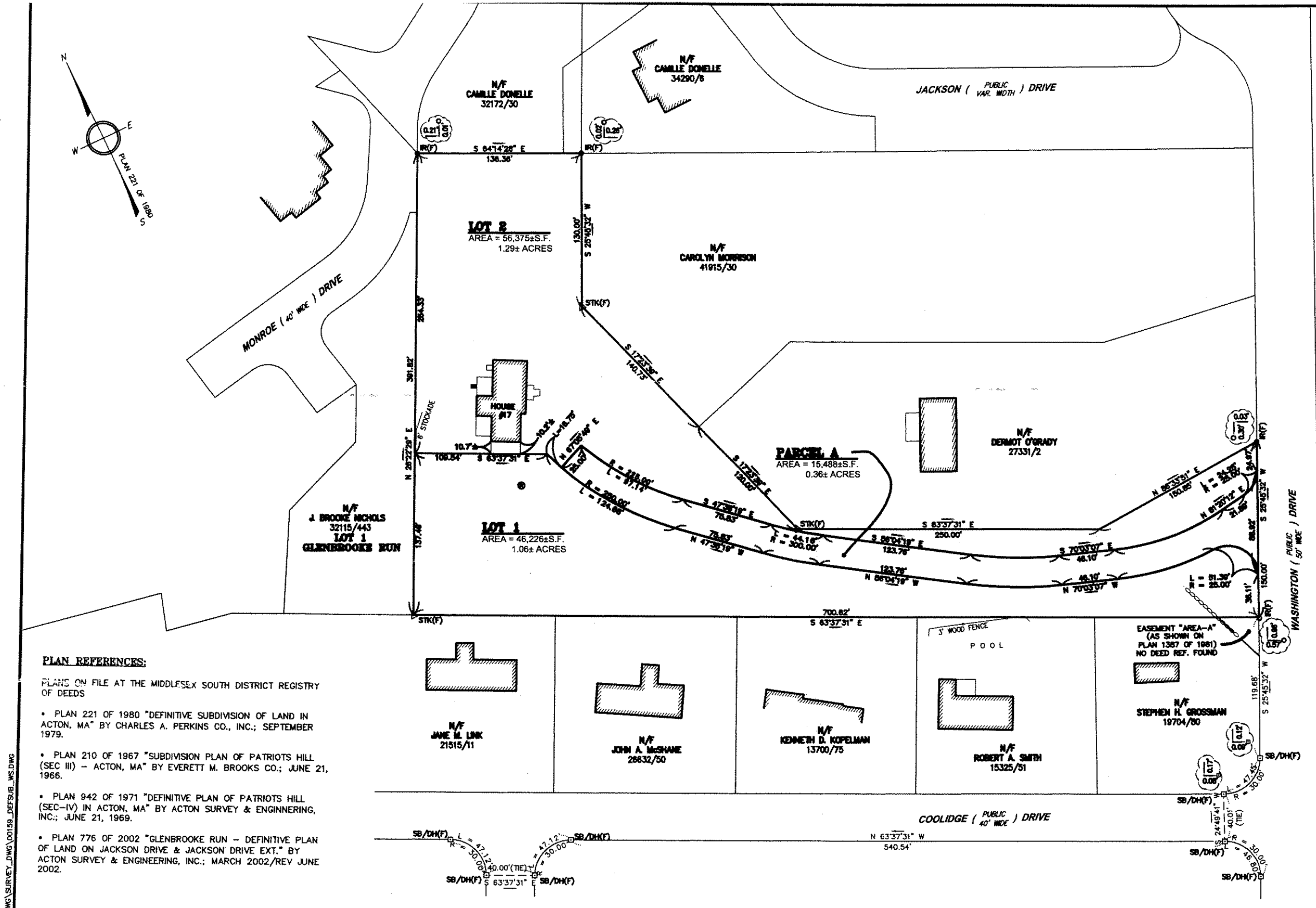

PLAN REFERENCES:

PLANS ON FILE AT THE MIDDLESEX SOUTH DISTRICT REGISTRY OF DEEDS

- PLAN 221 OF 1980 "DEFINITIVE SUBDIVISION OF LAND IN ACTON, MA" BY CHARLES A. PERKINS CO., INC.; SEPTEMBER 1979.
- PLAN 210 OF 1967 "SUBDIVISION PLAN OF PATRIOTS HILL (SEC III) – ACTON, MA" BY EVERETT M. BROOKS CO.; JUNE 21, 1966.
- PLAN 942 OF 1971 "DEFINITIVE PLAN OF PATRIOTS HILL (SEC–IV) IN ACTON, MA" BY ACTON SURVEY & ENGINNERING, INC.; JUNE 21, 1969.
- PLAN 776 OF 2002 "GLENBROOKE RUN – DEFINITIVE PLAN OF LAND ON JACKSON DRIVE & JACKSON DRIVE EXT." BY ACTON SURVEY & ENGINEERING, INC.; MARCH 2002/REV JUNE 2002.

LEGEND

N/F	NOW OR FORMERLY	CTR	CENTER
1111/111	DEED BOOK/PAGE	DH	DRILL HOLE
(F)	FOUND		PIPE/ROD
(S)	SET		STONE BOUND
IP	IRON/STEEL PIPE		DRILL HOLE
SB	STONE BOUND		STONE WALL

THIS LAND IS SUBJECT TO ANY EASEMENTS, RIGHTS–OF–WAY, RESTRICTIONS, COVENANTS, OR OTHER LIMITATIONS WHICH MAY BE DISCLOSED BY A TITLE EXAMINATION.

GRAPHIC SCALE

40 0 20 40 80 160

(IN FEET)
1 INCH = 40 FT.

ZONING CLASSIFICATION

ZONING DISTRICT.....R2
AREA.....20,000 S.F.
CONTINUOUS FRONTAGE.....150'

MINIMUM YARD DIMENSIONS { FRONT.....30' / SIDE.....10'

RECORD OWNER: GUIDO & HELENE GAGLIANO
ASSESSOR'S MAP E–3 PARCEL 88
DEED BOOK 24657 PAGE 363

I CERTIFY THAT THIS PLAN HAS BEEN PREPARED IN ACCORDANCE WITH THE RULES AND REGULATIONS OF THE REGISTERS OF DEEDS.

PETER A. LOTHIAN, P.L.S. # 40,978 DATE

JOB NO. 00.159

FOR REGISTRY USE ONLY

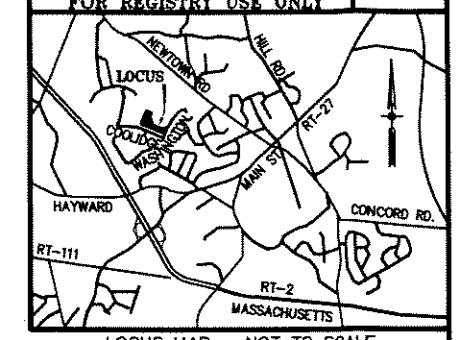

LOCUS MAP ~ NOT TO SCALE

APPROVAL IS REQUIRED UNDER THE SUBDIVISION CONTROL LAW
ACTON PLANNING BOARD

BEING A MAJORITY
DATE APPROVED: _____
DATE ENDORSED: _____

I_____, CLERK OF THE TOWN OF ACTON, HEREBY CERTIFY THAT THE NOTICE OF THE APPROVAL OF THIS PLAN BY THE PLANNING BOARD HAS BEEN RECEIVED AND RECORDED BY THIS OFFICE AND NO APPEAL WAS RECEIVED DURING THE 20 DAYS NEXT AFTER RECEIPT AND RECORDING OF SAID NOTICE.

ACTON TOWN CLERK DATE

NO.	DATE	BY	APP.	REVISION DESCRIPTION

GPR Engineering Solutions for Land & Structures

GOLDSMITH, PREST & RINGWALL, INC.
39 MAIN ST., SUITE 301, AYER, MA 01432
CIVIL & STRUCTURAL ENGINEERING • LAND SURVEYING & LAND PLANNING
VOICE: 978.772.1591 FAX: 978.772.1591
www.gpr-inc.com

RESIDENTIAL COMPOUND

PLAN OF LOTS

17 WASHINGTON DRIVE
ACTON, MA

OWNER/APPLICANT: GUIDO & HELENE GAGLIANO

1"= 40'

DES. BY: DSB
CHK. BY: PAL
DATE: FEB. 28, 2005
JOB 00.159
C2

2005 © COPYRIGHT GOLDSMITH, PREST & RINGWALL, INC.

\\GPR2600\PROJECTS\00-----\00159\DWG\SURVEY_DWG\00159_DEFSUB_WS.DWG

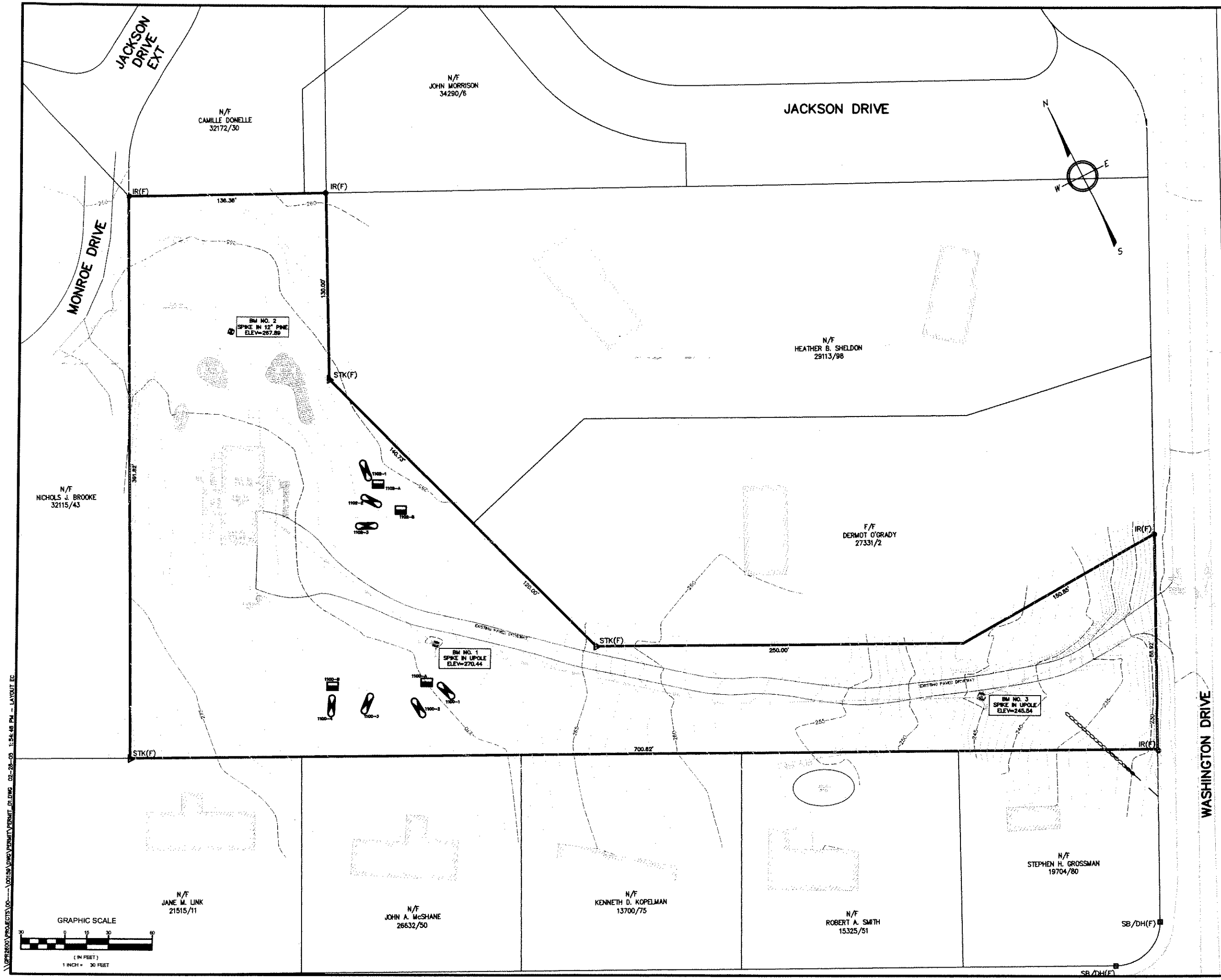

LEGEND

EXISTING		PROPOSED
100	ELEVATION CONTOUR	100
100.0	SPOT GRADE	100.0 FG
	PROPERTY LINE	
	BUILDING ENVELOPE	
	10-YR FLOODPLAIN LIMIT	
	100-YR FLOODPLAIN LIMIT	
WL1	WETLAND EDGE WITH FLAG NO.	
	25' NO-DISTURBANCE ZONE LIMIT	
	100' WETLAND BUFFER ZONE LIMIT	
	SHORELINE	
	INTERMITTENT STREAM/DITCH	
	200' RIVERFRONT ZONE LIMIT	
	EDGE OF PAVEMENT	
	GRAVEL/DIRT ROAD	
	FENCE	
	STONE WALL	
	WATER MAIN	
	WATER SERVICE	WS
	FOUNDATION DRAIN	FD
	FORCE MAIN	FM
	GRAVITY SEWER LINE	SS
	GAS LINE	
	BURIED POWER LINE	
	STORM DRAIN	SD
CB	CATCH BASIN	CB
DMH	DRAIN MANHOLE	DMH
	HAYBALE BARRIER	
	SILT FENCE BARRIER	
	RETAINING WALL	
199-1	DEEP SOIL OBSERVATION HOLE	
199-A	PERCOLATION TEST	
SB1	SOIL BORING	
GM1	GROUNDWATER MONITORING WELL	
	WELL	
	ELEVATION BENCHMARK	
	VERTICAL GRANITE CURB	
	CAPE COD BERM	
	SURFACE RUNOFF DIRECTION	

ABBREVIATIONS

TP	TOP OF PAVEMENT	SFB	SEDIMENT FORBAY
TW	TOP OF WALL	HDPE	HIGH DENSITY POLYETHYLENE PIPE
FG	FINISH GRADE	TOC	TOP OF CONCRETE
FF	FIRST FLOOR		
LL	LOWER LEVEL		
BF	BOTTOM OF FOOTING		

APPROVED BY THE
ACTON PLANNING BOARD

_____ CHAIR

_____ APPLICATION FILED _____

_____ HEARING DATE _____

_____ PLAN APPROVED _____

DRAWING ISSUED FOR:

☐ CONCEPT ☐ CONSTRUCTION

■ PERMIT ☐ CONSTRUCTION RECORD

THIS DRAWING MAY NOT SHOW CONSTRUCTION DETAILS AND SPECIFICATIONS FOR ALL PROPOSED IMPROVEMENTS, AND MAY NOT IDENTIFY ALL CONSTRUCTION WORK ITEMS/AREAS OF CONTRACTOR JURISDICTION.

NO.	DATE	BY	APP.	DESCRIPTION

GPR Engineering Solutions for Land & Structures

GOLDSMITH, PREST & RINGWALL, INC.
39 MAIN STREET, SUITE 301, AYER, MA 01432
CIVIL & STRUCTURAL ENGINEERING • LAND SURVEYING & LAND PLANNING
VOICE: 978.772.1590 FAX: 978.772.1591
www.gpr-inc.com

RESIDENTIAL COMPOUND

EXISTING CONDITIONS PLAN

17 WASHINGTON DRIVE
ACTON, MA

PREPARED FOR:
GUIDO GAGLIANO
17 WASHINGTON DRIVE
ACTON, MA 01720

DES. BY: MEG	DATE: FEBRUARY 2005	JOB 00159	C3
CHK. BY: BNC			

2005 © COPYRIGHT GOLDSMITH, PREST & RINGWALL, INC.

\\GPR2600\PROJECTS\00-----\00159\DWG\PERMIT\PERMIT_01.DWG 02-28-05 1:54:46 PM - LAYOUT: EC

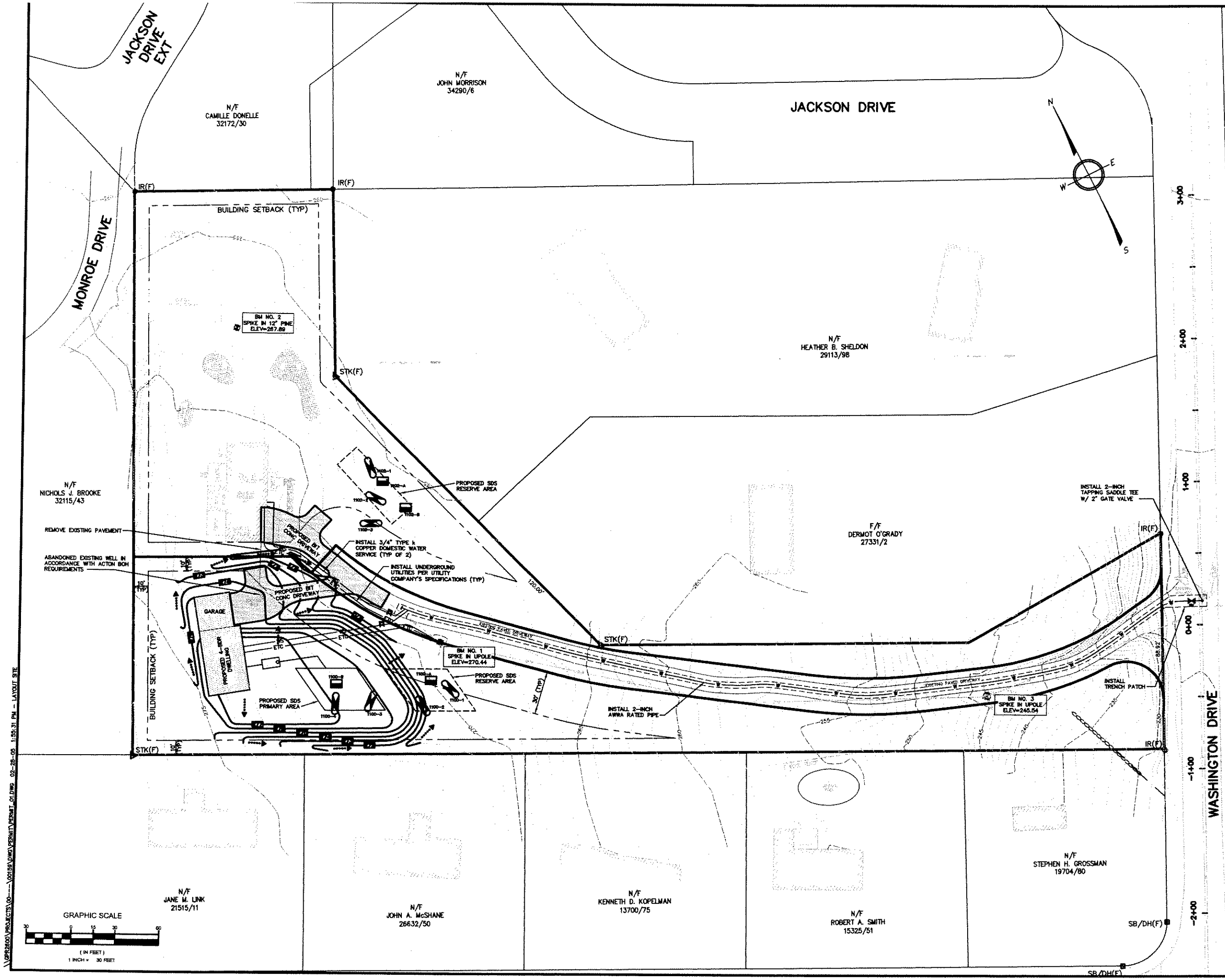

LEGEND

EXISTING		PROPOSED
100	ELEVATION CONTOUR	100
100x0	SPOT GRADE	100.0 FG
	PROPERTY LINE	
	BUILDING ENVELOPE	
	10-YR FLOODPLAIN LIMIT	
	100-YR FLOODPLAIN LIMIT	
WL1	WETLAND EDGE WITH FLAG NO.	
	25' NO-DISTURBANCE ZONE LIMIT	
	100' WETLAND BUFFER ZONE LIMIT	
	SHORELINE	
	INTERMITTENT STREAM/DITCH	
	200' RIVERFRONT ZONE LIMIT	
	EDGE OF PAVEMENT	
	GRAVEL/DIRT ROAD	
	FENCE	
	STONE WALL	
	WATER MAIN	
	WATER SERVICE	WS
	FOUNDATION DRAIN	FD
	FORCE MAIN	FM
	GRAVITY SEWER LINE	SS
	GAS LINE	
	BURIED POWER LINE	
	STORM DRAIN	SD
CB	CATCH BASIN	CB
DMH	DRAIN MANHOLE	DMH
	HAYBALE BARRIER	
	SILT FENCE BARRIER	
	RETAINING WALL	
199-1	DEEP SOIL OBSERVATION HOLE	
199-A	PERCOLATION TEST	
SB1	SOIL BORING	
GW1	GROUNDWATER MONITORING WELL	
	WELL	
	ELEVATION BENCHMARK	
	VERTICAL GRANITE CURB	
	CAPE COD BERM	
	SURFACE RUNOFF DIRECTION	
	WATER GATE VALVE	GV
	WATER SERVICE SHUTOFF	WSO

ABBREVIATIONS

TP	TOP OF PAVEMENT	SFB	SEDIMENT FORBAY
TW	TOP OF WALL	HDPE	HIGH DENSITY POLYETHYLENE PIPE
FG	FINISH GRADE	TOC	TOP OF CONCRETE
FF	FIRST FLOOR		
LL	LOWER LEVEL		
BF	BOTTOM OF FOOTING		

APPROVED BY THE
ACTON PLANNING BOARD

_____ CHAIR

_____ APPLICATION FILED_____

_____ HEARING DATE _____

_____ PLAN APPROVED_____

DRAWING ISSUED FOR:

☐ CONCEPT ☐ CONSTRUCTION

■ PERMIT ☐ CONSTRUCTION RECORD

THIS DRAWING MAY NOT SHOW CONSTRUCTION DETAILS AND SPECIFICATIONS FOR ALL PROPOSED IMPROVEMENTS, AND MAY NOT IDENTIFY ALL CONSTRUCTION WORK ITEMS/AREAS OF CONTRACTOR JURISDICTION.

NO.	DATE	BY	APP.	DESCRIPTION

GPR Engineering Solutions for Land & Structures

GOLDSMITH, PREST & RINGWALL, INC.
39 MAIN STREET, SUITE 301, AYER, MA 01432
CIVIL & STRUCTURAL ENGINEERING • LAND SURVEYING & LAND PLANNING
VOICE: 978.772.1590 FAX: 978.772.1591
www.gpr-inc.com

RESIDENTIAL COMPOUND

SITE DEVELOPMENT PLAN

17 WASHINGTON DRIVE
ACTON, MA

PREPARED FOR:
GUIDO GAGLIANO
17 WASHINGTON DRIVE
ACTON, MA 01720

DES. BY: MEG	DATE: FEBRUARY 2005	JOB 00159	C4
CHK. BY: BNC			

2004 © COPYRIGHT FOR GOLDSMITH, PREST & RINGWALL, INC.

\GPR2K001\PROJECTS\00-____\00159\DWG\PERMIT\PERMIT_01.DWG 02-28-05 1:55:31 PM - LAYOUT SITE

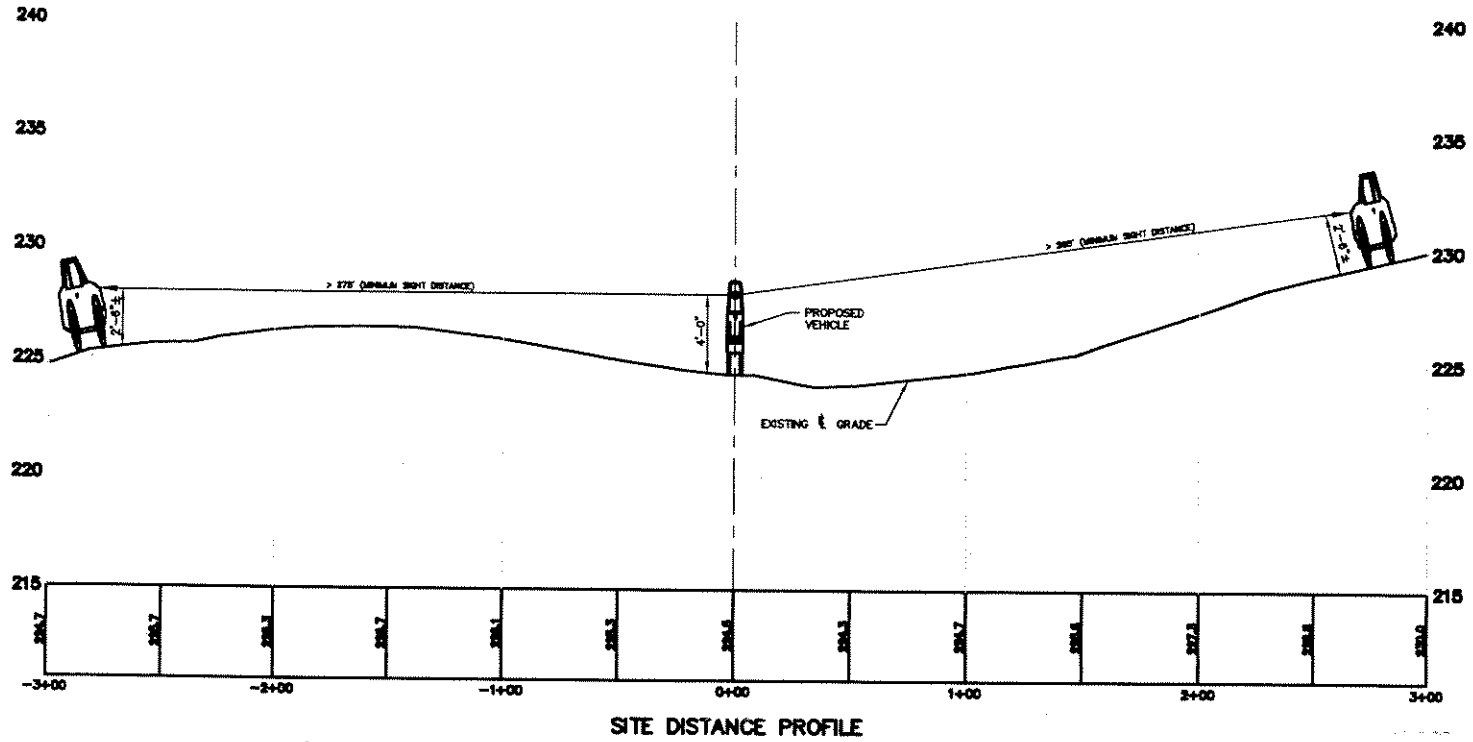

SITE DISTANCE PROFILE

NOTES:

[1] POSTED SPEED LIMIT ON WASHINGTON DRIVE IS 30 MPH.

[2] SITE DISTANCES MEET THE REQUIREMENTS OF THE FEDERAL HIGHWAY ADMINISTRATION.

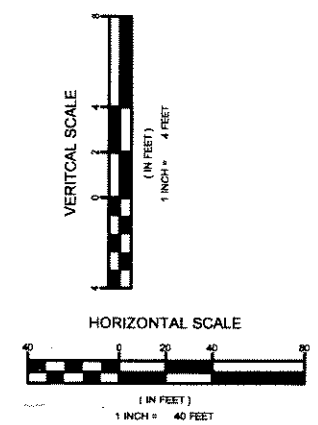

APPROVED BY THE
ACTON PLANNING BOARD

_____ CHAIR

_____ APPLICATION FILED_____

_____ HEARING DATE _____

_____ PLAN APPROVED_____

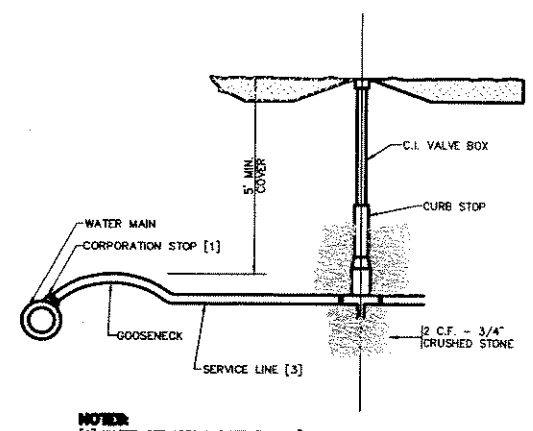

NOTES:
[1] WATER SERVICES LARGER THAN 1" ARE TO BE RESTRAINED TO MAIN WITH APPROVED SADDLE.
[2] COORDINATE BUILDING CONNECTION WITH PLUMBING DRAWINGS.
[3] ALL MATERIALS PER MUNICIPAL STANDARDS.

WATER SERVICE
TYPICAL CROSS SECTION
NOT TO SCALE

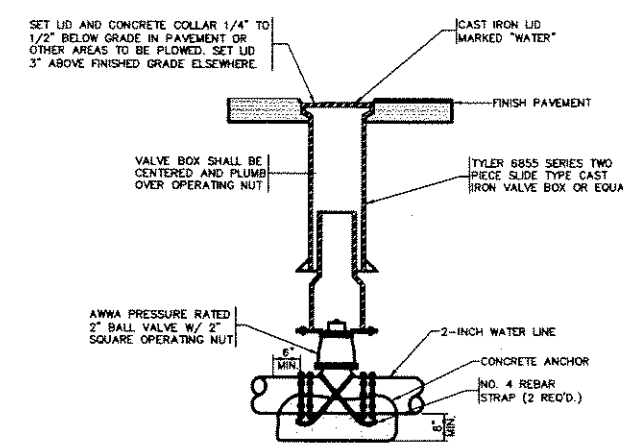

WATER VALVE
TYPICAL CROSS SECTION
NOT TO SCALE

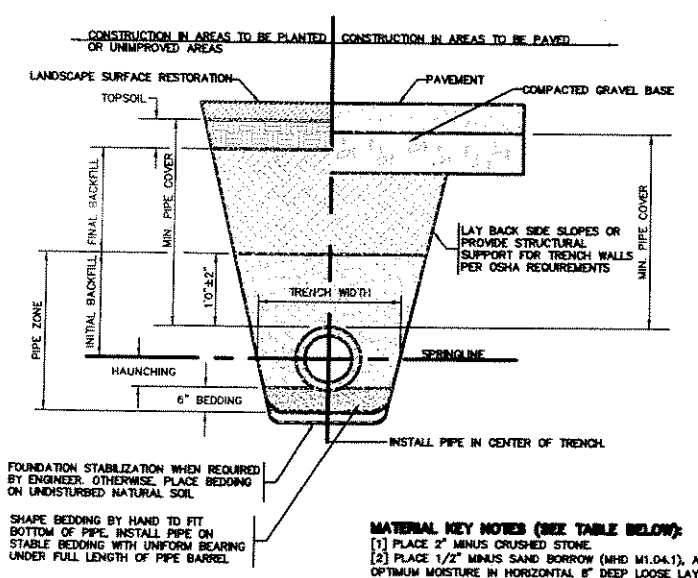

TRENCH WIDTH:
[1] MINIMUM WIDTH OF TRENCH MEASURED AT SPRINGLINE OF PIPE, INCLUDING ANY NECESSARY SHEATHING:

PIPE I.D.	WIDTH
LESS THAN 21"	O.D. + 12"
21" TO 42"	O.D. + 24"
GREATER THEN 42"	O.D. + 30"

MINIMUM PIPE COVER:
[1] MINIMUM SOIL COVER OVER TOP OF PIPE.

PIPE MATERIAL	HDPE, PVC	RC, DI
WATER	5' - 0"	5' - 0"
SEWER	4' - 0"	4' - 0"
DRAIN	2' - 0"	1' -0"

MATERIAL KEY NOTES (SEE TABLE BELOW):
[1] PLACE 2" MINUS CRUSHED STONE.
[2] PLACE 1/2" MINUS SAND BORROW (MHD M1.04.1), AT OPTIMUM MOISTURE IN HORIZONTAL 8" DEEP LOOSE LAYERS, COMPACT TO 95% PER ASTM D-1557 MODIFIED PROCTOR METHOD.
[3] IN PLANTED OR UNIMPROVED AREAS, USE 2-INCH MINUS ON-SITE EXCAVATED MATERIAL. COMPACT TO 95% PER ASTM D-1557. IN PAVED AREAS, OBTAIN ENGINEER APPROVAL OF 2-INCH MINUS ON-SITE EXCAVATED MATERIALS.

FOUNDATION, BEDDING AND BACKFILL MATERIALS		
PIPE MATERIAL	HDP, PVC	RC, DI
FOUNDATION STABILIZATION	[NOTE 1]	[NOTE 1]
BEDDING	[NOTE 2]	[NOTE 2]
HAUNCHING	[NOTE 2]	[NOTE 2]
INITIAL BACKFILL	[NOTE 2]	[NOTE 2]
FINAL BACKFILL	[NOTE 3]	[NOTE 3]

PIPE TRENCH
TYPICAL CROSS SECTION
NOT TO SCALE

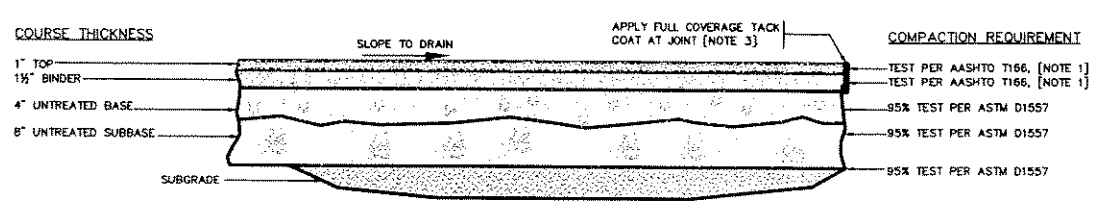

MATERIAL	SPECIFICATION	MAXIMUM AGGREGATE OR PARTICLE SIZE (IN.)
TOP - BITUMINOUS CONCRETE	MHD M3.11.03 CLASS I, TYPE I-1	3/4
BINDER - BITUMINOUS CONCRETE	MHD M3.11.03 CLASS I, TYPE I-1	3/4
BASE - GRAVEL BORROW [NOTE 2]	MHD M1.03.0 TYPE C	2
SUBBASE - GRAVEL BORROW	MHD M1.03.0 TYPE C	2
UNSUITABLE SUBGRADE - ORDINARY BORROW	ON-SITE EXCAVATED MATERIAL	12

NOTES:
[1] COMPACT TO TEST AVERAGE OF 95% NO TEST LOWER THAN 93%.
[2] ACCEPTABLE SUBSTITUTE MATERIAL: 3/4" MINUS DENSE GRADED CRUSHED STONE.
[3] EXISTING PAVEMENT SHALL BE SAW CUT VERTICALLY AT FINAL JOINT LOCATIONS.

BITUMINOUS CONCRETE PAVEMENT
TYPICAL CROSS SECTION
NOT TO SCALE

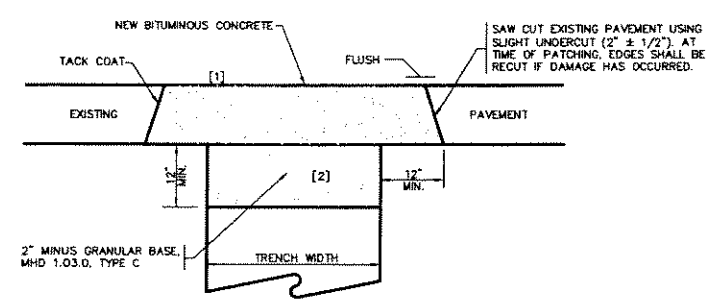

NOTES:
[1] GRANULAR BASE COMPACTION: 95% PER ASTM D-1557 MODIFIED PROCTOR METHOD
[2] BIT. CONCRETE COMPACTION: 95%

TRENCH PATCH
TYPICAL CROSS SECTION
NOT TO SCALE

DRAWING ISSUED FOR:

☐ CONCEPT ☐ CONSTRUCTION
■ PERMIT ☐ CONSTRUCTION RECORD

THIS DRAWING MAY NOT SHOW CONSTRUCTION DETAILS AND SPECIFICATIONS FOR ALL PROPOSED IMPROVEMENTS, AND MAY NOT IDENTIFY ALL CONSTRUCTION WORK ITEMS/AREAS OF CONTRACTOR JURISDICTION.

NO.	DATE	BY	APP.	DESCRIPTION

GPR Engineering Solutions for Land & Structures

GOLDSMITH, PREST & RINGWALL, INC.
39 MAIN STREET, SUITE 301, AYER, MA 01432
CIVIL & STRUCTURAL ENGINEERING • LAND SURVEYING & LAND PLANNING
VOICE: 978.772.1590 FAX: 978.772.1591
www.gpr-inc.com

RESIDENTIAL COMPOUND

SITE DISTANCE PROFILE AND DETAILS

17 WASHINGTON DRIVE
ACTON, MA

PREPARED FOR:
GUIDO GAGLIANO
17 WASHINGTON DRIVE
ACTON, MA 01720

DES. BY: MEG	DATE: FEBRUARY 2005	JOB 00159	C5
CHK. BY: BNC			

2005 © COPYRIGHT GOLDSMITH, PREST & RINGWALL, INC.

\\GPR2800\PROJECTS\00---\00159\DWG\PERMIT\PERMIT_01.DWG 03-29-05 1:56:02 PM - LAYOUT DETAILS