FYI

TOWN OF ACTON
472 Main Street
Acton, Massachusetts, 01720
Telephone (978) 264-9628
Fax (978) 264-9630

RECEIVED
OCT 20 2006
TOWN OF ACTON
PLANNING DEPARTMENT

Engineering Department

INTERDEPARTMENTAL COMMUNICATION

To: **Planning Department** ***Date:*** October 20, 2006

From: **Engineering Department** CJ

Subject: **Robbins Mill Estates – Modification to Detention Basin #3**

This office received a request from Marchionda & Associates dated October 11, 2006 to modify the design of detention basin #3. They are proposing to enlarge the rip rap splash pad at the outlet of the drain pipe and reconfigure the plantings & ground cover along the bottom of the basin.

The storage capacity and the outflow from this detention basin will not be altered as a result of this work. We have reviewed the plan submitted with the request and found their proposal should rectify the erosion problem at the outlet pipe in the detention basin.

10/24/06
No material change
Therefore, no red-line vote
required by Pl. Bd.
R.B.

Marchionda
& Associates, L.P.

Engineering and
Planning Consultants

RECEIVED
OCT 18 2006
TOWN OF ACTON
ENGINEERING DEPARTMENT

October 11, 2006

Acton Planning Board
Town Hall
Acton, MA

Re: Modification to Detention Basin #3 – Robbins Mill Estates

Dear Board Members:

After almost fully completing detention basin #3, it became obvious that the size of the rip rap apron, at the inlet to the basin, was not designed large enough to effectively reduce scouring at the end of the pipe. To eliminate future scouring, we are proposing to enlarge the rip rap apron (see detail enclosed). By enlarging the apron, the plantings & the ground cover in the bottom of the basin will be altered/reduced. Also, upon closer review of the basin, the approved plans propose vegetation in some areas of the basin that will have difficulty surviving at the grades indicated on the plans. The plantings for the basin bottom have also been modified to be more appropriate for the proposed elevations specified on the approved plans. This change has been reviewed by the Conservation Department and is also being submitted to the Engineering Department. Enclosed are 3 copies of the plans describing the revisions. We believe that theses changes are consistent with the intent of the original design.

Please let us know if anything further needs to be done on our part to implement this proposal. Should you have any questions, please do not hesitate to call.

Sincerely,
Marchionda & Associates, L.P.

Michael J. Rosati
Project Manager

62 Montvale Avenue
Suite I
Stoneham, MA 02180

Tel: (781) 438-6121
Fax: (781) 438-9654
Email: mail@marchionda.com

website: http://www.marchionda.com

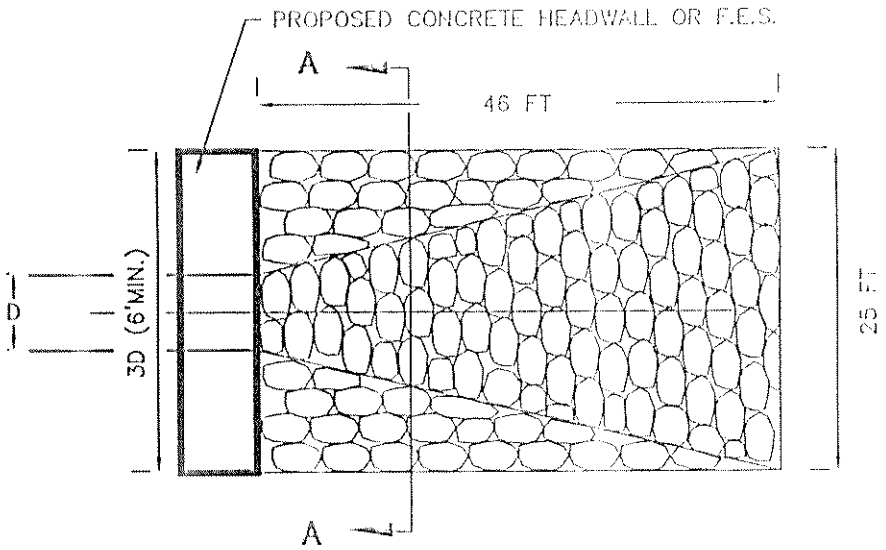

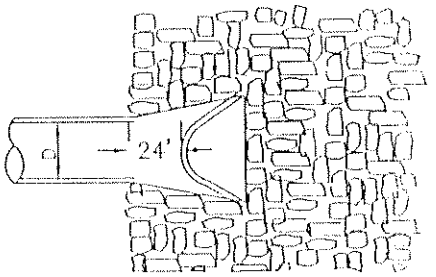

PLAN

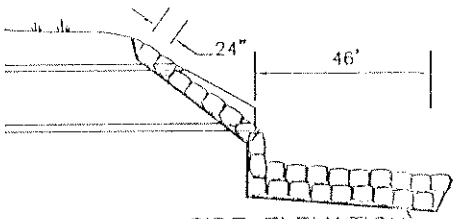

SIDE ELEVATION

PROP. FILTER FABRIC

FLARED END

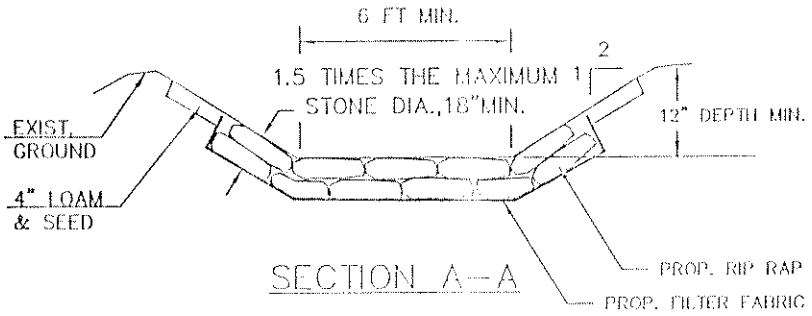

SECTION A–A

RIP–RAP SPECIFICATIONS:

STONE QUALITY – STONE FOR RIP – RAP SHALL CONSIST OF 12–18 INCH STONE.
THE STONE SHALL BE HARD AND ANGULAR AND OF A QUALITY THAT WILL NOT DESINTERGRATE ON EXPOSURE TO WATER OR WEATHERING.

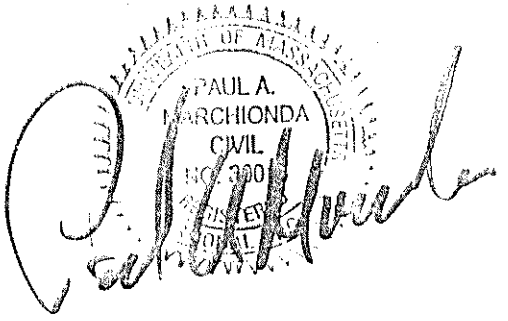

RIP - RAP APRON

NOT TO SCALE

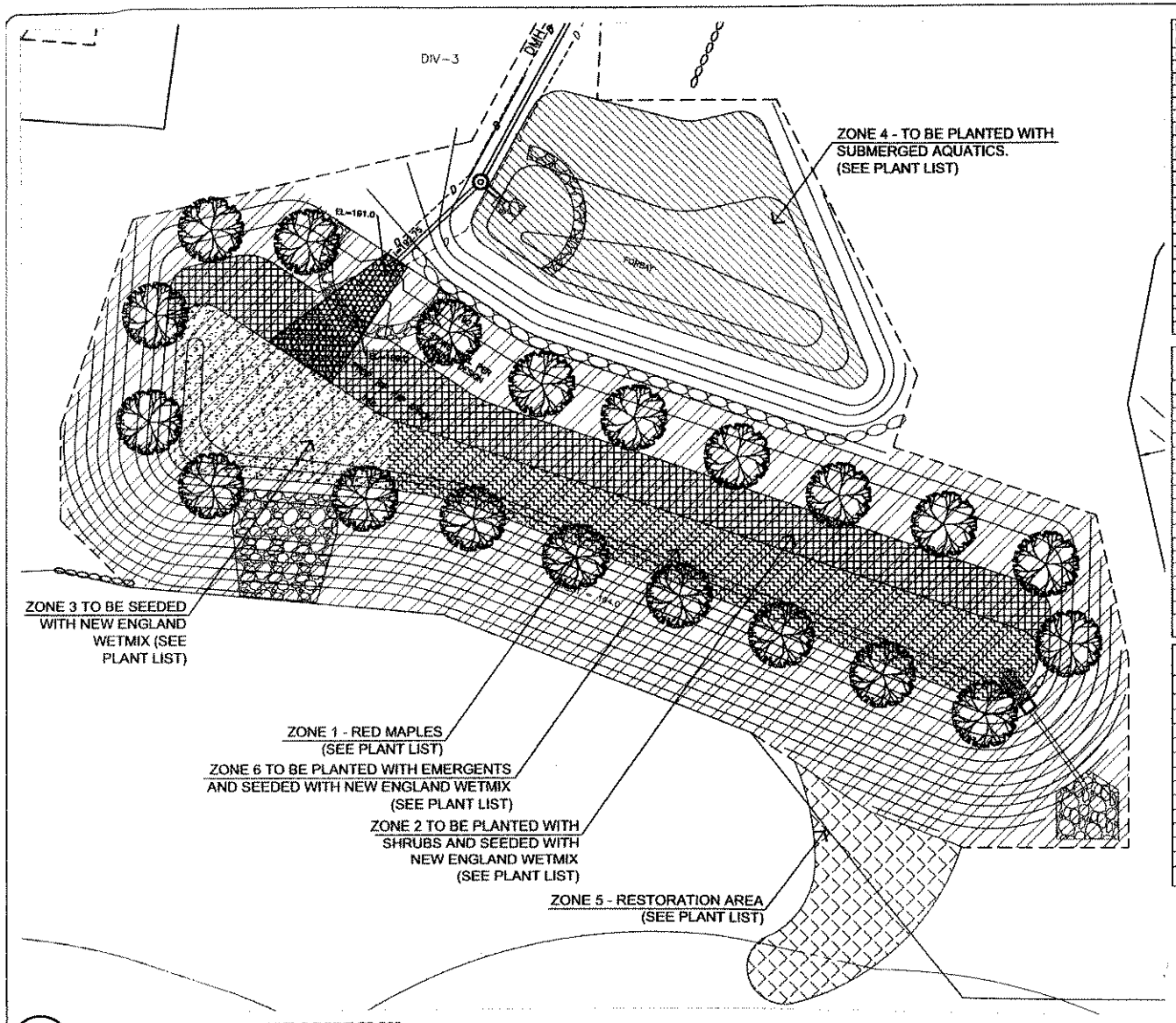

1 / BT-1 **DETENTION BASIN #3 LANDSCAPE PLAN**
SCALE 1"= 40'-0"

PLAN 0 20 40 80

PLANT LIST FOR DETENTION BASIN #3
ROBBINS MILL ESTATE - ACTON, MA

COMMON NAME	SCIENTIFIC NAME	QTY	SIZE	SPACING
ZONE 1				
RED MAPLE	*Acer rubrum*	20	5'-6'	40' O.C.
ZONE 2				
SILKY DOGWOOD	*Cornus amomum*	100	TUBELINGS	5' O.C
PUSSY WILLOW	*Salix discolor*	100	TUBELINGS	5' O.C
SPECKLED ALDER	*Alnus incana*	100	TUBELINGS	5' O.C
NEW ENGLAND WETMIX		3	1 LBS / 2500 S.F.	
ZONE 3				
NEW ENGLAND WETMIX		2	1 LBS / 2500 S.F.	
ZONE 4				
WILD CELERY	*Vallisneria americana*	400	BARE ROOT	
LONG LEAF PONDWEED	*Potamogeton nodosus*	400	BARE ROOT	
ZONE 5				
CINNAMON FERN	*Osmunda cinnamomea*	150	1 GAL	3' O.C.
NEW ENGLAND WETMIX		2	1 LBS / 2500 S.F.	
ZONE 6				
PICKERELWEED	*Pontederia cordata*	500	2" PLUG	3' O.C.
BURREED	*Sparganium americanum*	500	2" PLUG	3' O.C.
HARD-STEM BULRUSH	*Schoenoplectus acius*	500	2" PLUG	3' O.C.
DUCK POTATO	*Sagittaria latifolia*	500	2" PLUG	3' O.C.
NEW ENGLAND WETMIX		3	1 LBS / 2500 S.F.	

NEW ENGLAND WETMIX

SPECIES	PERCENT (RAW SEED)
Fox Sedge (Carex vulpinoidea)	40
Hop Sedge (Carex lupulina)	6
Water Plantain (Alisma plantago-aquatica)	5
Nodding Bur Marigold (Bidens cernua)	5
Lurid Sedge (Carex lurida)	5
Soft Rush (Juncus effusus)	5
Grass-leaved Goldenrod (Solidago graminifolia)	5
Bearded Sedge (Carex comosa)	4
Fringed Sedge (Carex crinita)	4
Boneset (Eupatorium perfoliatum)	4
Flat-top Aster (Aster umbellatus)	3
Hard-stem Bulrush (Scirpus acutus)	3
Green Bulrush (Scirpus atravirens)	3
Woolgrass (Scirpus cyperinus)	3
Spotted Joe Pye weed (Eupatorium maculatum)	2
Blue Vervain (Verbena hastata)	2
Ditch Stonecrop (Penthorum sedoides)	1
TOTAL	100

NEW ENGLAND CONSERVATION / WILDLIFE SEED MIX

SPECIES	PERCENT
Big Bluestem (Andropogon gerardii)	20
Little Bluestem (Schizachyrium scoparium)	20
Switchgrass (Panicum virgatum)	20
Fox Sedge (Carex vulpinoidea)	10
Silky Wild Rye (Elymus villosus)	8
Common Milkweed (Asclepias syriaca)	5
Deertongue (Panicum clandestinum)	5
Pennsylvania Smartweed (Polygonum pensylvanicum)	5
Partridge Pea (Chamaecrista fasciculata)	4
Silky Smooth Aster (Aster laevis)	1.5
Nodding Bur-Marigold (Bidens cernua)	1
Flat-top Aster (Aster umbellatus)	0.5
TOTAL	100

Prepared by:
NEW ENGLAND ENVIRONMENTAL, INC.
ENVIRONMENTAL CONSULTING SERVICES
9 RESEARCH DRIVE
AMHERST, MA 01002
TEL: (413) 256 0202
FAX: (413) 256 1092
WWW.NEEINC.COM

Prepared for:

DETENTION BASIN
PLANTING PLAN AND PLANT LIST
PROPOSED CONDITIONS PLAN
ROBBINS MILL ESTATES
ACTON, MA

Date:	08-18-06
Scale:	AS SHOWN
Drawn by:	AJB
Checked by:	HJM
NEE File #	ACTON
DEP #	

REVISIONS	DATE	BY

SHEET # BT-1 1 of 1