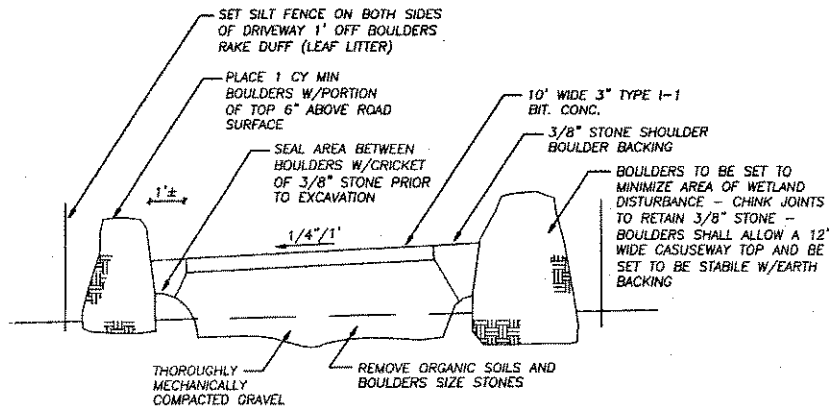

DRIVEWAY/WETLAND CROSSING

N.T.S.

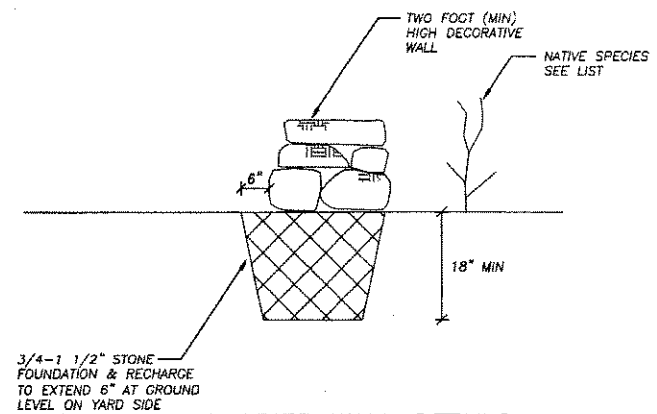

BARRIER WALL DETAILS

N.T.S.

NATIVE PLANT LIST:

TREES AND SHRUBS

BOTANICAL NAME	COMMON NAME	SIZE
CORNUS AMOMUM	SILKY DOGWOOD	18 - 24" ht.
CORNUS SERICEA	RED-OSIER DOGWOOD	18 - 24" ht.
VACCINIUM CORYMBOSUM	HIGHBUSH BLUEBERRY	18 - 24" ht.
VIBERNUM DENTATUM	NORTHERN ARROWWOOD	2 - 3' ht.
CLETHRA ALNIFOLIA	SWEET PEPPERBUSH	2 - 3' ht.
ACER RUBRUM	RED MAPLE	3 - 4' ht.
FRAXINUS PENSYLVANICA	GREEN ASH	3 - 4' ht.
NYSSA SYLVATICA	BLACK GUM	3 - 4' ht.
ILLEX VERTICILLATA	WINTERBERRY HOLLY	18 - 24" ht.
TSUNGA CANADENSIS	EASTERN HEMLOCK	3 - 4' ht.
PLANTUS OCCIDENTALIS	AMERICAN SYCAMORE	3 - 4' ht.

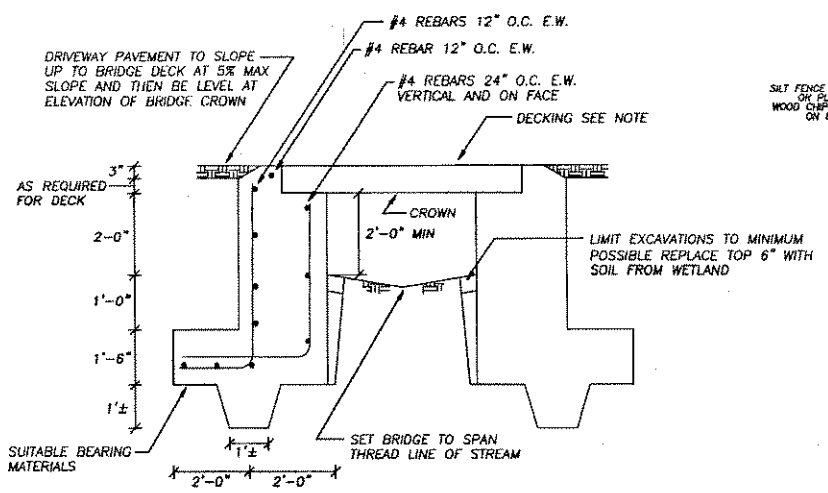

BRIDGE DETAIL

N.T.S.

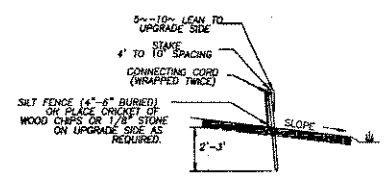

NOTES:

1. FENCES SHALL BE LOCATED AT LIMIT OF WORK, OR AS SHOWN ON PLANS.
2. PENETRATE OR "SNUG" GROUND WITH BOTTOM FOR ENTIRE LENGTH.
3. DO NOT INSTALL IN A MANNER WHICH WILL CONCENTRATE RUNOFF.
4. BACK FENCE WITH STAKED HAYBALES IN HIGH RISK AREAS.
5. MAINTAIN AND REMOVE FENCE AS REQUIRED.
6. REMOVE PRODUCTS OF EROSION FREQUENTLY.

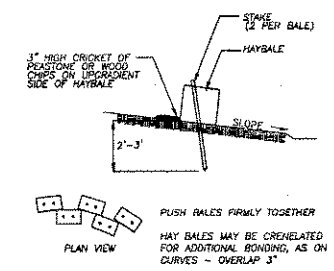

EROSION CONTROL BARRIER

(TWO ALTERNATIVES)
N.T.S.

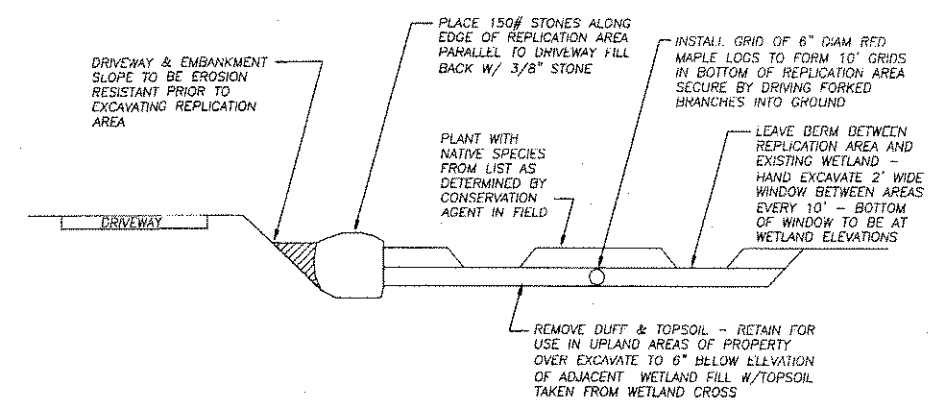

REPLICATION AREA DETAILS

N.T.S.

RECEIVED
MAY 17 2007
ACTON CONSERVATION COMMISSION

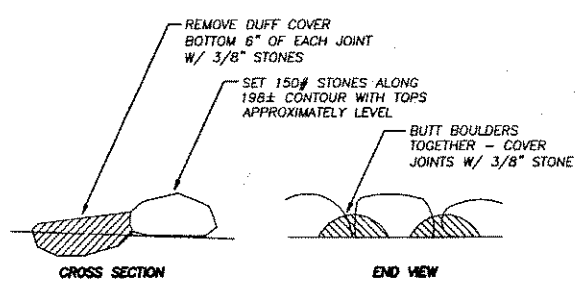

STONE GROIN DETAILS

N.T.S.

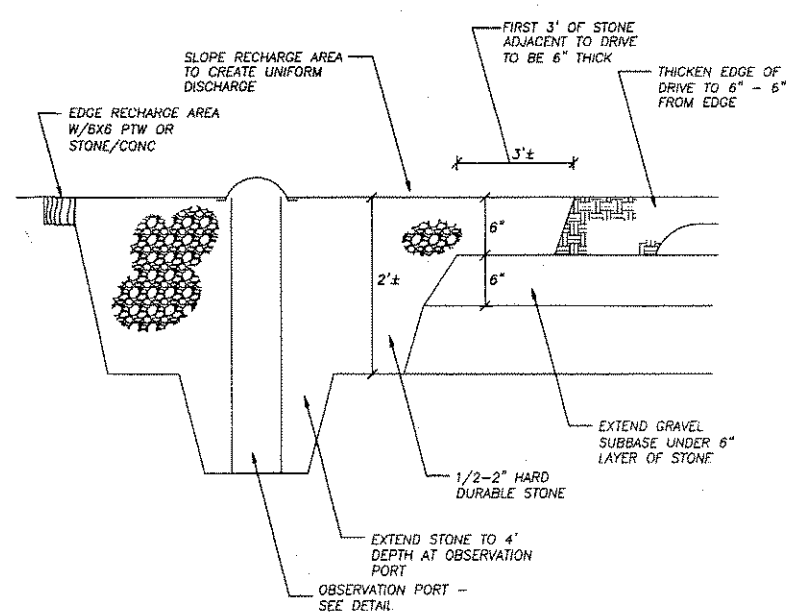

DRIVEWAY RECHARGE WORKS

N.T.S.

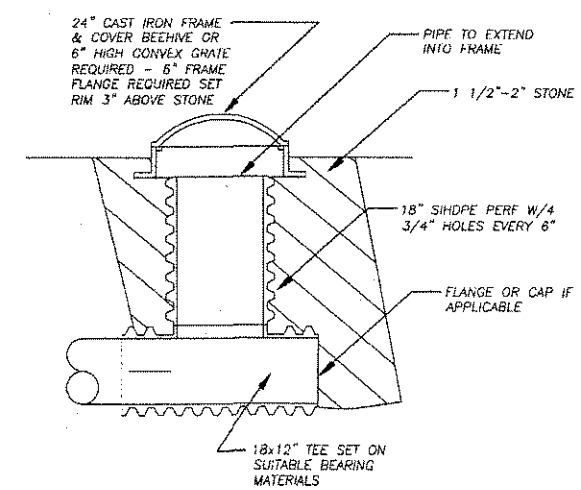

BASIN OBSERVATION PORT/INLET/OUTLET DETAIL

N.T.S.

5-17-7

MARK DONOHOE CIVIL No. 37148 REGISTERED PROFESSIONAL ENGINEER

NOTICE OF INTENT
SITE DETAILS
LOTS 2C & 3 SPRING HILL ROAD
ACTON, MASSACHUSETTS

PREPARED FOR:
JEANSON HOMES, INC.
12 KENNEDY LANE
ACTON, MA 01720

SCALE: 1"=20' DATE: APRIL 19, 2007

Acton Survey & Engineering, Inc.
Since 1967
97 GREAT ROAD
P.O. BOX 666
ACTON, MA 01720
PH. (978) 263-3666
FAX (978) 635-0218

6562-NOI-2/3

EROSION AND SEDIMENTION CONTROL
LANDSCAPE SENSITIVITY

GENERAL

A well planned construction effort resulting in minimizing both the extent and time of disturbances shall be the primary erosion control measure utilized at this site.

Providing localized controls to prohibit runoff from concentrating is also of great importance.

Care shall be taken to protect trees that are to remain from abrasion by equipment and to insure that soil over their roots is not unnecessarily compacted.

NPDES REQUIREMENTS

This plan is intended to meet the requirements of the National Storm Water Pollution Discharge Elimination System [NPDES] of Section 40c2 of the Federal Clean Water Act. A Storm Water Pollution Prevention Plan [SWPPP] and an Erosion and Sediment Control Plan [ESCP] is required because over one acre of land will be disturbed during the construction of the road, development of the lots and infrastructure at the site.

The site will not result in an off site discharge, or a discharge to a water body and it is anticipated that construction will meet the criteria for a NPDES General Permit.

A NPDES Notice of Intent, this plan, and substantiating documents are to be submitted [postmarked] a minimum of two days prior to the initiation of construction [disturbance of surfaces].

NPDES RECORD REQUIREMENTS

A copy of the NPDES submittal, including this plan, must be kept on site at all times during construction and must be made available to interested parties.

The permitee must maintain records for a three-year period from the date the site has become covered by 70 percent vegetated growth.

Plans for site development shall be kept on site, with the Npdes submittal materials.

NPDES INSPECTION REQUIREMENTS

Written records of all inspections shall be kept. Inspections shall be by qualified persons and shall include, at a minimum, the date of inspection, operations of the contractors, the status of erosion control devices and stormwater management systems, general site conditions and any discharges from the site.

During construction inspections are required every seven days and after each rainfall event exceeding 0.5 inches.

After the site is stabilized inspections are required at monthly intervals for three years.

STAGING AREA FOR WETLAND CROSSING

No alterations shall occur in the area of the proposed house sites until after the wetland crossing is completed.

An adequate staging area of minimum size should be established on the peninsular extending out from the existing driveway and surrounded by wetlands. The staging area is to allow for speed in the construction of the crossing and is to be restored in a manner that will allow it to become naturalized.

Only materials and equipment necessary for the crossing shall be located in the staging area, which shall be demarcated by a silt fence.

CLEARING

Clearing shall only be performed in anticipation of other construction activities occurring in the area of clearing in the direct future. Areas to be altered over a month later should not be cleared.

The area of the crossing shall be cleared by hand with trees being cut to the size necessary for removal without the use of equipment. Care shall be taken to remove the minimum amount of vegetation necessary to construct the driveway.

If invasive species are encountered they shall be removed, if possible when seeds are not present, by pulling and transported off site immediately for disposal by incineration.

Brush and branches shall be chipped for use in stabilization and erosion control.

CROSSING CONSTRUCTION

The crossing shall be constructed by placing boulders from the upland area or driveway construction along the sides of the driveway.

Duff [leaf litter] branches, etc. shall be removed by hand from the full width of the driveway embankment just in advance of the placement of boulders.

A silt fence shall be installed just outside of the limits of the boulders and to avoid damaging the roots of adjacent vegetation the fabric shall not be toed into the ground. It shall be made snug to the ground and duff raked against the bottom of the fabric to create a seal.

The soil below the boulders should not be excavated. An exception might be the removal of existing boulders that will preclude the new boulders being set so they are stable. The boulders shall be pressed into the thin layer of organic soils and set so they stand and are stable by themselves and will be stable after the driveway fill is placed. As shown in the driveway cross-section, they should be set so that a least a portion of their tops extend above the proposed driveway surface.

The boulders should butt against each other at their bottoms and the joint should be sealed to as great a height as possible by placing 3/8 inch stone against the joint.

Once the boulders have been placed to the extent possible the organic soils shall be removed by "scooping" them out. The equipment utilized shall be such that the clearing required for the swing area does not extend beyond the boulders.

The gravel fill shall then be placed to the height necessary to allow equipment to travel over it so that the next sections of boulders can be installed and allow the three sided culvert, or bridge, to be installed by equipment operating from the embankment.

Prior to any excavation for the culvert silt fence shall be installed directly at the edge of the proposed abutment on both sides of the bridge. The fence is to serve only as a limit of work and need not be toed into the ground.

Excavations near the fence shall be made by hand, but excavations sufficiently distanced from the fence can be made by machine so that excavations near the fence can be made by peeling materials of a cut face and into the excavation for removal.

The near side abutment shall be poured and stripped so that the driveway fill can be installed and provide an elevated operating surface for the excavations and other processes required for the placement of the far side abutment.

Prior to any excavations for the far side abutment two plywood sheets shall be placed over the crossing extending from the silt fence to the top of the abutment. The plywood shall be removed whenever work is not being performed.

The excavations for and pouring of the abutment footing shall be scheduled for completion in one working day. The placement of forms and pouring of the abutment walls shall be completed in the same construction week. Forms shall be removed the following week and the abutment backfilled to the extent possible.

The silt fences shall be removed and any area disturbed, between the abutments, shall be corrected. The front toe of the abutment shall be filled with materials removed from the wetland area to be filled by the driveway on the far side.

Equipment shall only pass over the crossing on a bridge deck. The deck may be a temporary deck and be supported by blocking placed on the driveway fill. The deck shall have silt fences attached to both sides. If a precast concrete deck is used timbers shall be placed along the sides to attach the fence.

The remaining portion of the driveway shall be constructed by placing the boulders and fill as described above.

DRIVEWAY TO HOUSE SITE

The clearing and grading of the driveway from the wetland crossing to the housing site shall be scheduled for completion in one workweek and shall only be taken after the crossing has been established as necessary to support the required construction effort.

Construction efforts shall be geared to allowing equipment to established the driveway so that materials to be removed can be transported outside of the 100 foot buffer as soon as possible.

The driveway extends uphill to the housing sites and as a result the excavations could result in a disturbed surface channeling runoff down to the wetlands. Any excavations should be back sloped to form localized basins when rain is expected.
It is recommended that a shallow depression, or bermed area, be established between the proposed subsurface sewage disposal system areas to stockpile earthen materials and equipment. The basin will also serve to recharge flows from areas offsite and prohibit their flow down the driveway.

As the driveway nears completion it is to be graded to shed runoff on its down hill side and the slopes receiving the runoff shall be stabilized by the placement of wood mulch/chips that can be covered with branches to provide further resistance to erosion. This area is to become naturalized and the planting of the slope with native species such as Yellow Birch and Sassafras is recommended.

Sand bag check dams should be placed along the edge of the driveway to insure runoff is dispersed onto erosion resistant surfaces.

HOUSING SITE CONSTRUCTION

Initiation of the construction of the houses, the subsurface sewage disposal systems and related facilities shall not commence until the access drive has been constructed to a passable condition and all surfaces related to the driveway are made erosion resistant.

The construction of each site may be initiated and completed separately, but both shall be performed in an organized manner to limit the period and extent of disturbance.

Erosion barriers shall be placed as close to the area of alterations as possible and be maintained and/or replaced as required. Any products of erosion entrapped by the barriers shall be promptly removed and their source abated.

Clearing and grubbing shall only be performed in expectation of work in the area cleared.

Grading shall be staged so that runoff does not concentrate and to allow prompt stabilization of surfaces. Placement of erosion barriers on the downhill side of the work and sand bag check dams at other locations shall occur as necessary to decrease erosion potential.

The barrier walls at the rear of the houses shall be installed as soon as possible and their faces away from the houses are to be the limit of work. Areas within 10 feet of the wall shall be permanently stabilized as soon as conditions allow and not be delayed until other portions of the site are to be stabilized.

The site shall be kept litter free and containers shall be located on site for rubbish storage. Liquids such as paints, lubricants and solvents shall not be placed in the containers and shall be transported off site for proper storage on the date they are generated or became waste.

The construction of the soil absorption system will result in the major alterations and grading of the site. The construction shall be scheduled to allow the system to be installed in a short period of time and so that once completed its surface can be made erosion resistant.

The construction of the homes and installation of driveways will result in an increase in the volume and rate of runoff. Dripline recharge trenches [dry wells maybe substituted] are to be installed to intercept roof runoff. Until these facilities can be installed temporary facilities to hold and recharge the runoff should be provided. The area of the backyards, outside the 10 foot area stabilized next to the barrier wall, are areas where shallow basins could be constructed.

Runoff from the driveway can be diverted to the area between it and the primary soil absorption system or to the area of the proposed recharge system below the road embankment if the system has not been constructed.

Prior to any excavation for the culvert silt fence shall be installed directly at the edge of the proposed abutment on both sides of the bridge. The fence is to serve only as a limit of work and need not be toed into the ground.

Excavations near the fence shall be made by hand, but excavations sufficiently distance from the fence can be made by machine so that excavations near the fence can be made by peeling materials of a cut face and into the machine excavation for removal.

The near side abutment shall be poured and stripped so that the driveway fill can be installed and provide an elevated operating surface for the excavations and other processes required for the placement of the far side abutment.

Prior to any excavations for the far side abutment two plywood sheets shall be placed over the crossing extending from the silt fence to the top of the abutment. The plywood shall be removed whenever work is not being performed.

The excavations for and pouring of the abutment footing shall be scheduled for completion in one working day. The placement of forms and pouring of the abutment walls shall be completed in the same construction week. Forms shall be removed the following week and the abutment backfilled to the extent possible.

The silt fences shall be removed and any area disturbed, between the abutments, shall be corrected. The front toe of the abutment shall be filled with materials removed from the wetland area to be filled by the driveway on the far side.

Equipment shall only pass over the crossing on a bridge deck. The deck may be a temporary deck and be supported by blocking placed on the driveway fill. The deck shall have silt fences attached to both sides. If a precast concrete deck is used timbers shall be placed along the sides to attach the fence.

The remaining portion of the driveway shall be constructed by placing the boulders and fill as described above.

DRIVEWAY TO HOUSE SITE

The clearing and grading of the driveway from the wetland crossing to the housing site shall be scheduled for completion in one workweek and shall only be taken after the crossing has been established as necessary to support the required construction effort.

Construction efforts shall be geared to allowing equipment to establish the driveway so that materials to be removed can be transported outside of the 100 foot buffer as soon as possible.

The driveway extends uphill to the housing sites and as a result the excavations could result in a disturbed surface channeling runoff down to the wetlands. Any excavations should be back sloped to form localized basins when rain is expected.
It is recommended that a shallow depression, or bermed area, be established between the proposed subsurface sewage disposal system areas to stockpile earthen materials and equipment. The basin will also serve to recharge flows from areas offsite and prohibit their flow down the driveway.

As the driveway nears completion it is to be graded to shed runoff on its down hill side and the slopes receiving the runoff shall be stabilized by the placement of wood mulch/chips that can be covered with branches to provide further resistance to erosion. This area is to become naturalized and the planting of the slope with native species such as Yellow Birch and Sassafras is recommended.

Sand bag check dams should be placed along the edge of the driveway to insure runoff is dispersed onto erosion resistant surfaces.

WETLAND REPLICATION AREA

The wetland replication area shall be formed and be ready for receiving the organic soils removed from the wetland crossing upon their removal.

Duff and organic soils shall be removed from the area and stockpiled for upland restoration.

The limits of the replication area shown on the plan are an approximation and shall be adjusted to protect existing vegetation with emphasis being given to the protection of the root systems of large trees. The replication area shall be inspected and all invasive species shall be removed and disposed of by incineration.

As shown in the detail the area is to be over excavated to a depth of 6-inches below the adjacent wetlands and filled with the organic soils.

Planting of the area shall then be performed as shown on the detail and the plantings should be scheduled to occur under favorable conditions.

The wetland area shall be maintained to insure the establishment of the planted species and exclusion of invasive species.

EQUIPMENT TRACKS/TIRES

Care shall be taken to insure that vehicles entering the site do not serve to transport seeds or roots [rhizomes] of invasive species.

Equipment entering the site from areas in which invasive plant species are possibly present shall be cleaned of dirt.

Invasive species include Japanese Knotweed, Buckthorn, Phragmites, etc.

GENERAL NOTES:

1. Plans were prepared for named client and project. Reproduction in whole, in part or by adaptation for other purposes is expressly prohibited.
2. Drawings shall not be scaled. If clarification of intent is REQUIRED, contractor shall obtain prompt clarification prior to continuing work.
3. Contractor shall visit site prior to initiation of work and shall notify ACTON SURVEY & ENGINEERING, INC. and owner of any discrepancies with site conditions, or proposed construction, on date discovered.
4. Contractor shall be responsible for coordinating proposed construction with existing conditions.
5. Contractor shall notify Dig-Safe [1-888-344-7233] and verify all underground utilities prior to construction.
6. Contractor shall be responsible for obtaining all necessary permits and licenses.
7. All work shall conform to all local and state regulatory agencies and utility company requirements.
8. Upon entering the SITE, the contractor shall become responsible for all erosion control, dewatering and shall undertake all measures to protect wetlands, the drainage system and streets from siltation and dust.
9. Contractor shall be responsible for repairing any damage caused to roads, walks, utilities, site improvements [existing or proposed] both inside and outside the limit of work if damage due to work directly associated with this project.
10. Existing utilities shall be maintained in service as required by the use of site and adjacent properties. Relocate utility lines as required.
11. The drainage system shall be maintained and functional during construction and all catch basins, manholes & pipes shall be cleaned after the completion of the project.
12. The "site plan" is based on topographic survey showing all visually apparent features of the site on the date(s) that surface explorations and topography were completed.
13. No attempt was made, in preparing the plans, to ascertain the location of non-visually apparent subsurface utilities and structures, or conditions.
14. The limit of work shall be as designated and / or the edge of the proposed grading and / or the property lines, if not indicated.
15. Materials imported to the site shall be free of hazardous waste and noxious materials, stored as designated and shall not hamper the site activities.
16. Materials exported from the site shall become the property of the contractor and be disposed of in a legal manner.
17. All existing and new utility structures shall be adjusted to finished grades. Setting of rims temporarily at binder course may be required.
18. All water mains, water services and force mains shall have a five (5') foot minimum cover.
19. All pavements shall be cut to a vertical face outside limits of prior disturbance and prior to installing adjacent new pavements. All new pavements shall be installed in a manner that is uniform, with watertight joints resulting.
20. The project shall be complete when the site is found to be litter/debris free, erosion resistant, all erosion barriers are removed and pavements, catch basins, manholes and pipes are clean.
21. The contractor shall clearly mark the limits of work in the field prior to the the start of construction.
22. Hauling of earth to or from the site shall be done between the hours of 7:00 a.m. and 5:00 p.m. on weekdays only.

RECEIVED
MAY 17 2007
ACTON CONSERVATION COMMISSION

COMMONWEALTH OF MASSACHUSETTS
MARK OSHOKOE
CIVIL
No. 27749
REGISTERED PROFESSIONAL ENGINEER

NOTICE OF INTENT
SITE NOTES
LOTS 2C & 3 SPRING HILL ROAD
ACTON, MASSACHUSETTS

PREPARED FOR:
JEANSON HOMES, INC.
12 KENNEDY LANE
ACTON, MA 01720

SCALE: 1"=20' DATE: APRIL 19, 2007

Acton Survey & Engineering, Inc.
Since 1967
97 GREAT ROAD
P.O. BOX 666
ACTON, MA 01720
PH. (978) 263-3666
FAX (978) 635-0218

6562-NOI-3/3