# SEWAGE DISPOSAL SYSTEM DETAILS

NO SCALE

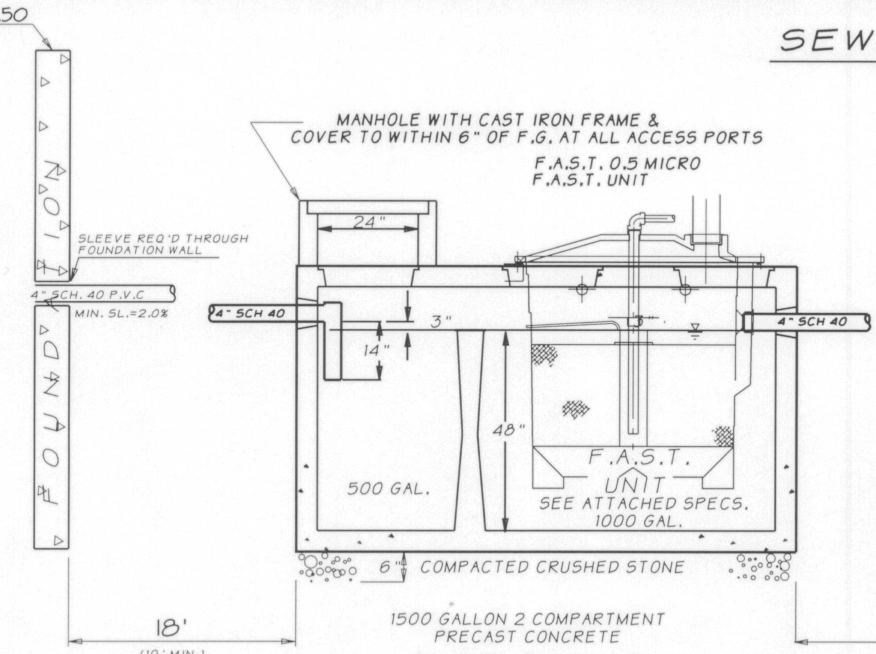


1500 GALLON 2 COMPARTMENT
PRECAST CONCRETE

## F.A.S.T. UNIT

TANK SHALL CONFORM TO 310 CMR 15.226
(SHEA CONCRETE PRODUCTS, INC. OR APPROVED EQUIVALENT)

NOTE: F.A.S.T. SYSTEM ALARM SHALL BE WIRED ON A SEPARATE, DEDICATED CIRCUIT.
(SEE ATTACHED SPECIFICATIONS BY MANUFACTURER)

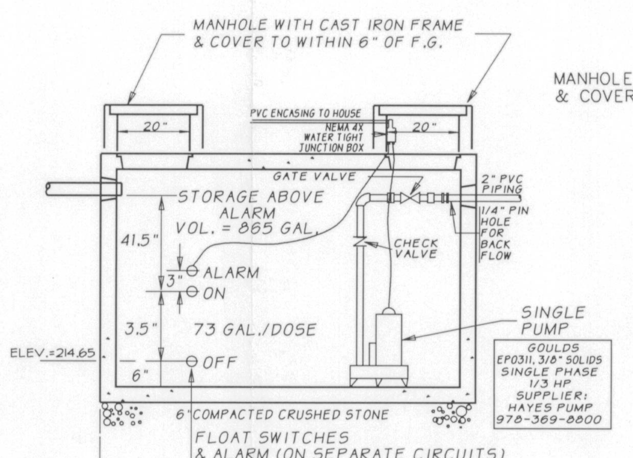


## PUMP CHAMBER

PRECAST CONCRETE
1000 GALLON CAPACITY

SHALL CONFORM TO 310 CMR 15.226
(SHEA CONCRETE PRODUCTS, INC. OR APPROVED EQUIVALENT)

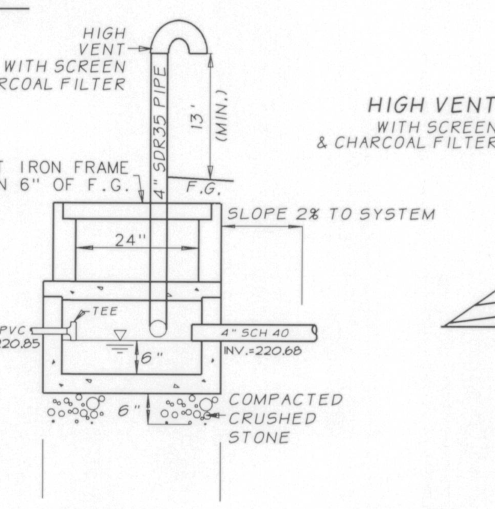


## DISTRIBUTION BOX

PRECAST CONCRETE
WITH INLET TEE AND HIGH VENT
24" RISER WITH MED. DUTY FRAME
AND COVER TO WITHIN 6" OF F.G.

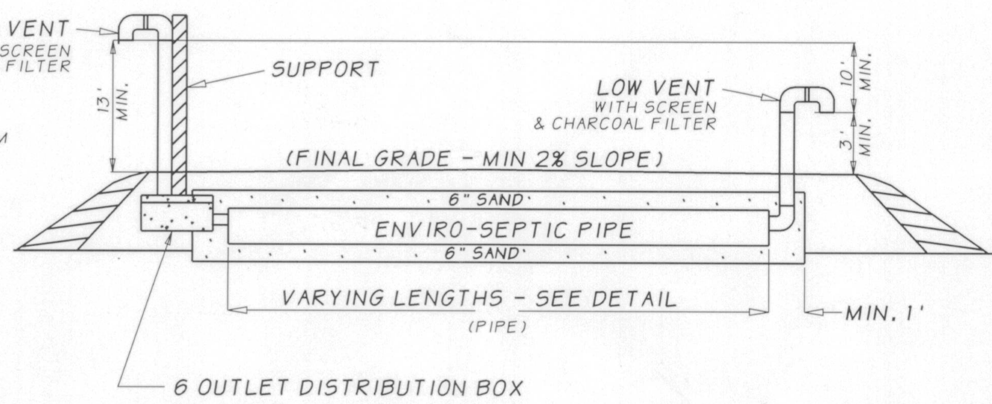


- 6 OUTLET DISTRIBUTION BOX
- INSULATE D-BOX WITH 2" STYROFOAM
- INSTALL "90" OR "T" BAFFLE AT END OF PRESSURED LINE.

## PRESBY ENVIRO-SEPTIC LEACHING BED

NO SCALE

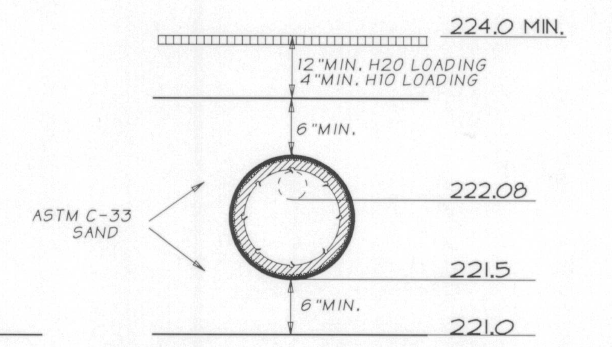


SAND BED DETAIL

NO SCALE

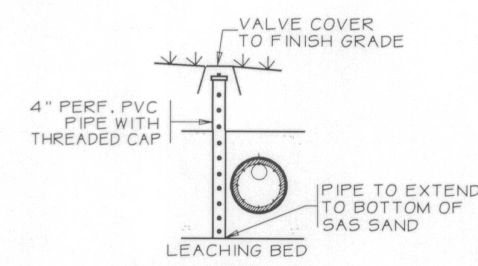


ONE INSPECTION PORT REQUIRED IN THE PRIMARY LEACHING AREA

## SAS INSPECTION PORT DETAIL

NO SCALE

ENVIRO-SEPTIC
LEACHING SYSTEM

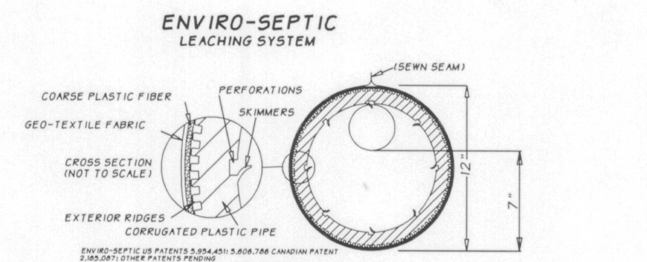


ENVIRO-SEPTIC US PATENTS 5,954,451; 5,606,786 CANADIAN PATENT 2,185,087; OTHER PATENTS PENDING

NOTES

1) SYSTEM TO BE INSTALLED IN ACCORDANCE WITH PRODUCT DESIGN AND INSTALLATION MANUAL, STATE AND LOCAL REGULATIONS. FOR PRODUCT INFORMATION OR THE NEAREST DEALER CONTACT PRESBY ENVIRONMENTAL, INC. ROUTE 117 - PO BOX 617 SUGAR HILL, NH 03585 - PHONE 1-800-473-5298 - WWW.PRESBYENVIRONMENTAL.COM
2) MINIMUM OF 6" OF MEDIUM TO COARSE SAND WITH LESS THAN 2% PASSING A # 200 SIEVE REQUIRED AROUND CIRCUMFERENCE OF ENVIRO-SEPTIC PIPES. (SEE DESIGN AND INSTALLATION MANUAL FOR COMPLETE SAND AND FILL SPECIFICATIONS.)

RAISED CONNECTION
(NOT TO SCALE)

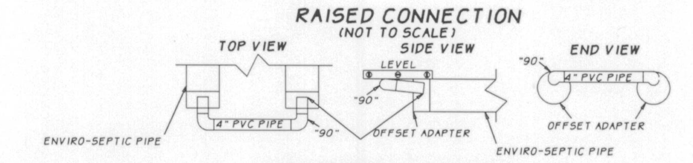


NOTE: DO NOT INSERT PVC PIPE MORE THAN 4" INTO OFFSET ADAPTER

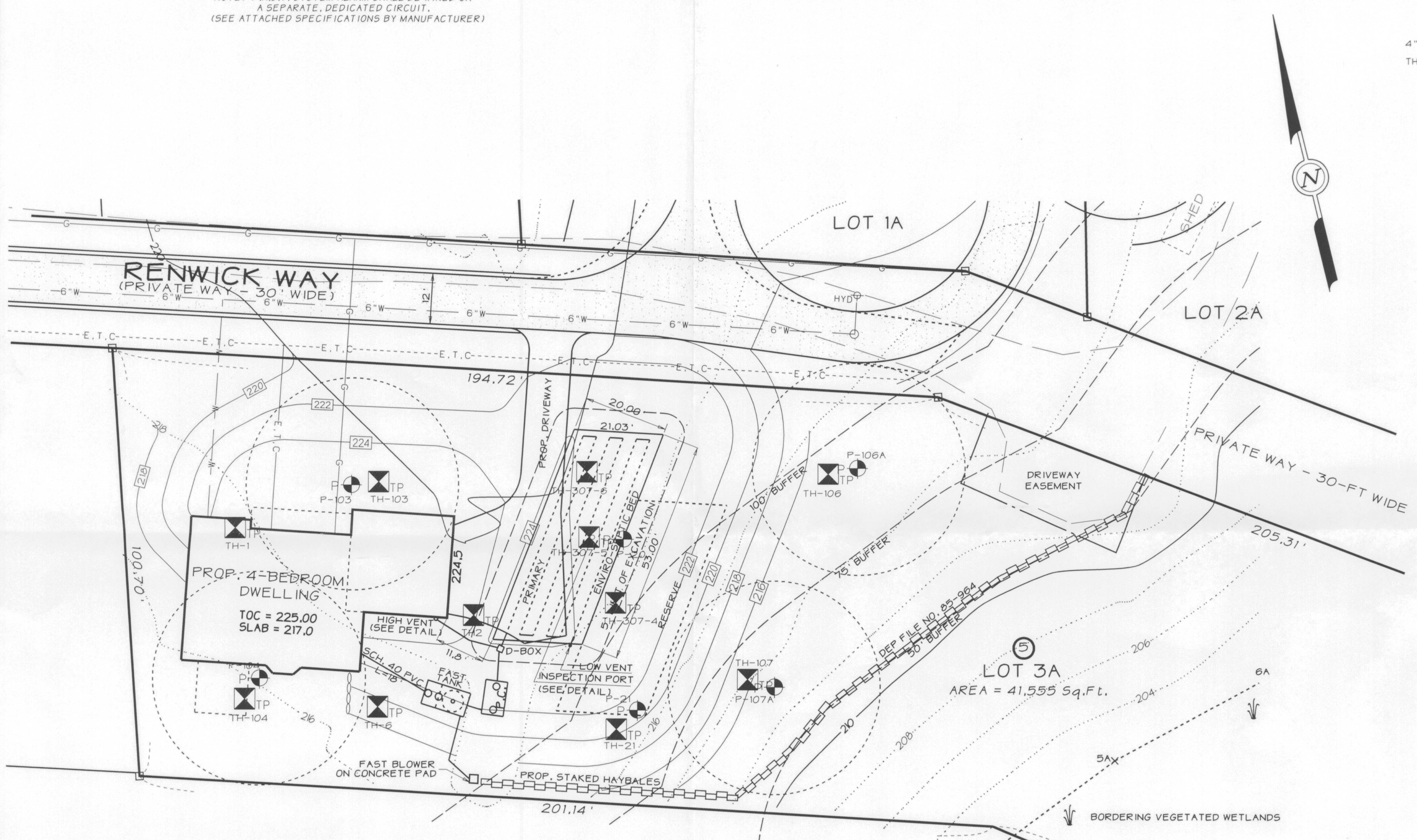


## PUMP CALCULATIONS

| | |
|---|---|
| HEAD LOSS | |
| ELEVATION HEAD LOSS | 222.42 - 214.65 = 7.8' |
| FORM & FRICTION LOSS............... | 3' |
| TOTAL HEAD LOSS.................... | 11' |

CHOOSE: GOULDS EP0311, 1/3 HP
3/8" SOLIDS EFFLUENT PUMP

SUPPLIERS: HAYES PUMP, INC. CONCORD, MA
PHONE: (978) 369-8800

FLOW RATE: 30 GALLONS PER MINUTE

PUMP CYCLE TIME
SEWAGE FLOW = 440 GALLON PER DAY
VOLUME/DOSE = 73 GALLONS
CYCLE TIME = 4 HOURS +_

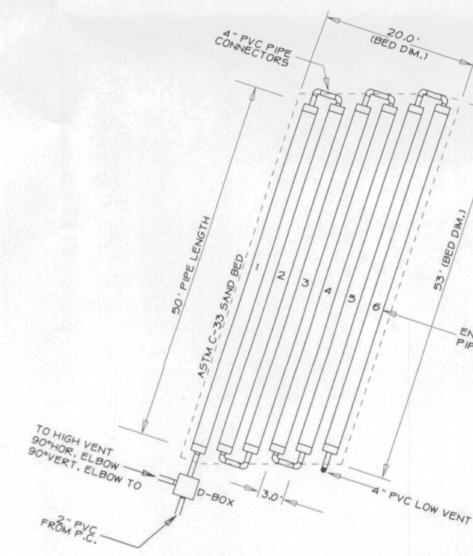


SCHEMATIC BED PIPING DIAGRAM
NO SCALE

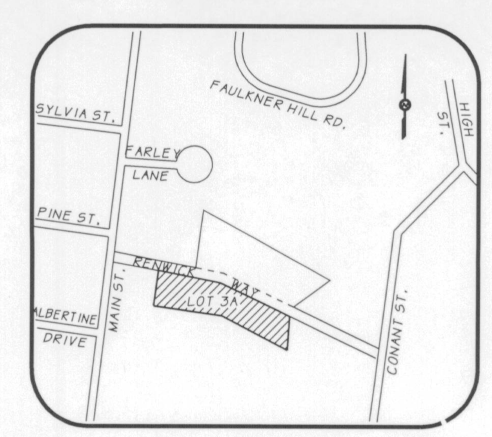


LOCUS

NO SCALE

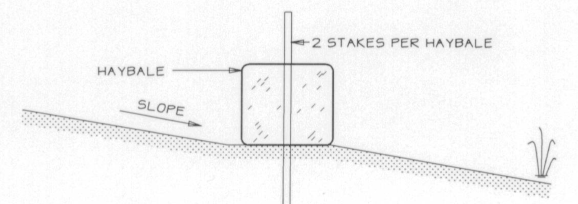


STAKED HAYBALE EROSION CONTROL BARRIER DETAIL

NO SCALE

## BUOYANCY CALCULATIONS

WATER TABLE AT 222.5±
TANK WEIGHT = 11,670 LBS.
Bf = 10.5 x 5.67 x 62.3 x 0.83'
= 3,078 LBS.
WHICH IS LESS THAN TANK WT.

215.0 / 214.17 — 0.83' SEPTIC TANK

WATER TABLE AT 222.7±
TANK WEIGHT = 8,765 LBS.
Bf = 8.0 x 5.17 x 62.3 x 1.18'
= 3,040 LBS.
WHICH IS LESS THAN TANK WT.

215.0 / 213.82 — 1.18' PUMP CHAMBER

## DEEP OBSERVATION HOLE LOG

| HOLE | SOIL TYPE | ELEV. (ft.) | NOTES | DATE | EVALUATOR | INSPECTOR |
|---|---|---|---|---|---|---|
| TH21 | SANDY LOAM A (10YR 3/2); LOAMY SAND B (10YR 6/4); SANDY LOAM C (2.5Y 5/4) | 216.00, 215.67, 214.00, ESHWT 211.5, 207.00 | ESHWT AT: 30" NO WEEPING NO REFUSAL | 9/19/06 | MATT WATERMAN LANDTECH | DOUG HALLEY ACTON B.O.H. |
| TH103 | SANDY LOAM A (10YR 3/2); LOAMY SAND B (10YR 6/4); SANDY LOAM C (2.5Y 5/4) DENSE | 219.00, 218.67, 217.00 ESHWT, 210.00 | ESHWT AT: 24" NO WEEPING NO REFUSAL | 9/19/06 | MATT WATERMAN LANDTECH | DOUG HALLEY ACTON B.O.H. |
| TH104 | SANDY LOAM A (10YR 3/2); LOAMY SAND B (10YR 6/4); SANDY LOAM C (2.5Y 5/4) DENSE | 216.00, 215.67, 214.33, 241.00 ESHWT, 207.00 | ESHWT AT: 24" NO WEEPING NO REFUSAL | 9/19/06 | MATT WATERMAN LANDTECH | DOUG HALLEY ACTON B.O.H. |
| TH106 | SANDY LOAM A (10YR 3/2); LOAMY SAND B (10YR 6/8); SANDY LOAM C (2.5Y 5/4) | 216.00, 215.25, 213.67, 212.67 ESHWT, 206.00 | ESHWT AT: 40" NO WEEPING NO REFUSAL | 9/19/06 | MATT WATERMAN LANDTECH | DOUG HALLEY ACTON B.O.H. |
| TH107 | SANDY LOAM A (10YR 3/2); LOAMY SAND B (10YR 6/8); SANDY LOAM C (2.5Y 5/4); SANDY LOAM C (2.5Y 5/4) | 213.00, 212.67, 211.00, ESHWT 208.5, 207.5, 203.00 | ESHWT AT: 54" NO WEEPING NO REFUSAL | 9/19/06 | MATT WATERMAN LANDTECH | DOUG HALLEY ACTON B.O.H. |
| TH1 | SANDY LOAM A (10YR 3/2); LOAMY SAND B (10YR 6/8); SANDY LOAM C (2.5Y 5/3) | 218.00, 217.50, 216.50, ESHWT 215.00, 208.00 | ESHWT AT: 36" NO WEEPING NO REFUSAL | 1/20/04 | MATT WATERMAN LANDTECH | BRENT REAGOR ACTON B.O.H. |
| TH2 | SANDY LOAM A (10YR 3/2); LOAMY SAND B (10YR 6/8); SANDY LOAM C (2.5Y 5/4) | 219.00, 218.67, 217.83, ESHWT 216.00, 210.00 | ESHWT AT: 36" NO WEEPING NO REFUSAL | 1/20/04 | MATT WATERMAN LANDTECH | BRENT REAGOR ACTON B.O.H. |
| TH6 | SANDY LOAM A (10YR 3/2); LOAMY SAND B (10YR 6/8); SANDY LOAM C (2.5Y 5/4) | 217.00, 216.50, 215.50, ESHWT 214.00, 207.00 | ESHWT AT: 36" NO WEEPING NO REFUSAL | 1/20/04 | MATT WATERMAN LANDTECH | BRENT REAGOR ACTON B.O.H. |
| TH307-4 | SANDY LOAM A (10YR 3/2); LOAMY SAND B (10YR 6/4); SANDY LOAM C (2.5Y 5/4) | 218.00, 217.50, 217.00, ESHWT 215.00, 209.00 | ESHWT AT: 36" NO WEEPING NO REFUSAL | 3/14/07 | JOHN BOARDMAN LANDTECH | BRENT REAGOR ACTON B.O.H. |
| TH307-5 | SANDY LOAM A (10YR 3/2); LOAMY SAND B (10YR 6/8); SANDY LOAM C (2.5Y 5/4) | 219.00, 218.50, 218.00, ESHWT 216.00, 210.00 | ESHWT AT: 36" NO WEEPING NO REFUSAL | 3/14/07 | JOHN BOARDMAN LANDTECH | BRENT REAGOR ACTON B.O.H. |
| TH307-6 | SANDY LOAM A (10YR 3/2); LOAMY SAND B (10YR 6/8); SANDY LOAM C (2.5Y 5/4) | 219.60, 219.10, 218.60, ESHWT 216.60, 209.60 | ESHWT AT: 36" NO WEEPING NO REFUSAL | 3/14/07 | JOHN BOARDMAN LANDTECH | BRENT REAGOR ACTON B.O.H. |

Depth scale (ft.): 0, 2, 4, 6, 8, 10, 12

## PERCOLATION TESTS

SOIL EVALUATOR: MATT WATERMAN — MATT WATERMAN
BOH AGENT: DOUG HALEY — BRENT REAGOR

| | P-20 | P-21 | P-103A | P-104A | P-106A | P-107A |
|---|---|---|---|---|---|---|
| DATE | 09/19/06 | 09/19/06 | 08/10/06 | 08/10/06 | 08/25/06 | 08/25/06 |
| BOTTOM ELEV. | 211.5 | 213.5 | 216.3 | 212.3 | 211.3 | 209.1 |
| RATE | 38 MPI | 30 MPI | >60 MPI | >60 MPI | >60 MPI | >60 MPI |

## DESIGN CALCULATIONS

1. SEWAGE DISPOSAL SYSTEM IS DESIGNED FOR USE WITH A GARBAGE GRINDER.
2. SEPTIC TANK:
   A VOLUME EQUAL TO TWICE THE DESIGN FLOW OR A MINIMUM VOLUME OF 1500 GALLONS IS REQUIRED. A 1500 GALLON TANK IS REQUIRED.
3. DESIGN CRITERIA:

| | |
|---|---|
| NUMBER OF BEDROOMS: | 4 |
| DESIGN FLOW: | 440 |
| SOIL TEXTURAL CLASS: | III |
| PERCOLATION RATE: | 40 MPI |
| APPLICATION RATE: | 0.25 |
| DESIGN GROUNDWATER DEPTH: | 30" |
| GROUNDWATER OFFSET: | 4' |

4. LEACHING FACILITY SIZING:
   AREA REQUIRED IS EQUAL TO THE DESIGN FLOW DIVIDED BY THE APPLICATION RATE:
   $\frac{440 \text{ GPD}}{0.25 \text{ GPD/S.F.}} = 1{,}760$ S.F.
   BY TITLE V, ENVIRO-SEPTIC BED CAN BE REDUCED BY 40%
   1,760 x 60% = 1,056 SQ.FT.
   ENVIRO-SEPTIC MANUAL DESIGN CRITERIA:
   TABLE A: MIN. LINEAR FOOTAGE REQ'D = 280 FT.
   TABLE B: MIN. SPACING = 2.00 FT.
   CHOOSE 6 LINES 50 FT. IN LENGTH, 3.00 FT. ON CENTER IN A 53 FOOT LONG X 20 FT WIDE ASTM C-33 SAND BED
   BASE AREA = 53 X 20 = 1060 S.F.
   (SEE DETAILS).
5. HYDRAULIC LOADING CAPACITY:
   1060/0.60 S.F. X 0.25 GPD/S.F. = 441 GPD

## PUMP NOTES

1. PUMP USED SHALL BE OF SPECIFIED MANUFACTURER AND MODEL UNLESS AN EQUIVALENT PUMP IS APPROVED IN WRITING BY FORESITE ENGINEERING ASSOC., INC.
2. PUMP ON/OFF SWITCHES AND ALARM SHALL BE WIRED TO SEPARATE SWITCHES IN HOUSE WIRING PANEL.
3. PVC FORCEMAIN FROM PUMP CHAMBER TO D-BOX SHALL BE LAID AT A CONTINUOUS POSITIVE GRADE TO ENSURE BACKFLOW TO PUMP CHAMBER.
4. AT LOCATIONS WHERE FORCEMAIN WILL NOT BACKFLOW DUE TO SAG IN THE FORCEMAIN AND WHERE THE SAG WILL HAVE LESS THAN FOUR FEET OF COVER, 2 INCH RIGID POLYSTYRENE INSULATION SHALL BE PLACED OVER THE LINE PRIOR TO BACKFILL.
5. A STAINLESS STEEL CHAIN OR RAIL TYPE SYSTEM SHALL BE INSTALLED ON PUMP FOR PUMP SERVICING.

## SCHEDULE OF ELEVATIONS

| | |
|---|---|
| TOP OF FOUNDATION | 223.50 |
| **INVERTS** | |
| AT FOUNDATION | 219.10 |
| AT SEPTIC TANK INLET | 218.75 |
| AT SEPTIC TANK OUTLET | 218.50 |
| PUMP INLET | 218.40 |
| PUMP SUMP | 214.15 |
| AT D-BOX INLET | 222.42 |
| AT D-BOX OUTLET | 222.25 |
| 4" INTO ENVIRO-SEPTIC PIPE | 222.08 |
| **OTHER ELEVATIONS** | |
| INVERT OF ENVIRO-SEPTIC PIPE (BREAKOUT ELEVATION) | 220.00 |
| BOTTOM OF ASTM C-33 SAND BED | 219.50 |

## LEGEND

| | |
|---|---|
| S.T. | SEPTIC TANK |
| P.C. | 1000 GALLON PUMP CHAMBER |
| D-BOX | DISTRIBUTION BOX |
| TP | DEEP TEST HOLE |
| P | PERCOLATION TEST |
| 98x3 | SPOT ELEVATIONS |
| —W— | MUNICIPAL WATER SUPPLY |
| ···196··· | EXISTING CONTOURS |
| —190— | PROPOSED CONTOURS |

## GENERAL NOTES

1. THIS PLAN IS FOR THE CONSTRUCTION OF THE PROPOSED SEWAGE DISPOSAL SYSTEM ONLY. OTHER LOCAL REGULATIONS MAY BE APPLICABLE TO THE PROJECT (I.E. ZONING, WETLANDS, ETC.).
2. CONTRACTOR SHALL REPORT ANY DISCREPANCIES BETWEEN OBSERVED FIELD CONDITIONS AND THIS DESIGN PLAN PRIOR TO INITIATING CONSTRUCTION.
3. PROPERTY BOUNDARIES SHOWN ARE FOR LOT 3A ORIGINALLY LOT 3 ON A.N.R. PLAN PREPARED BY LANDTECH CONSULTANTS, INC. DATED APRIL 3, 2007. PHYSICAL DATA, CONTOURS, SOILS TESTS AND EXISTING BUILDINGS, ARE FROM LOT 2 SEWAGE DISPOSAL SYSTEM DESIGN PREPARED BY LANDTECH CONSULTANTS, INC., DATED MARCH 28, 2007.
4. THE SYSTEM IS NOT DESIGNED FOR USE WITH A GARBAGE GRINDER.
5. THE SEPTIC TANK SHALL BE PUMPED WHEN THE SLUDGE DEPTH EXCEEDS 1/8 OF THE LIQUID CAPACITY OF THE SEPTIC TANK (ABOUT ONCE EVERY 2 YEARS) OR AS REQUIRED BY THE LOCAL BOARD OF HEALTH.
6. ANY PROPOSED WORK WITHIN 100 FEET OF A BORDERING VEGETATED WETLAND OR OTHER PROTECTED RESOURCE AREA IS UNDER THE JURISDICTION OF THE WETLANDS PROTECTION ACT AND THE LOCAL CONSERVATION COMMISSION.
7. WATER SUPPLY IS FROM MUNICIPAL WATER SYSTEM.
8. ALL KNOWN DRINKING WATER WELLS WITHIN 200 FEET OF THE PROPOSED SEWAGE DISPOSAL SYSTEM ARE SHOWN OR INDICATED.
9. SITE IS IN TOWN OF ACTON AQUIFER ZONE 4.
10. SITE IS WITHIN A DEP APPROVED ZONE II TO TOWN OF MAYNARD WATER SUPPLY WELL.
11. DEMONSTRATION THAT A SYSTEM IN FULL COMPLIANCE WITH 310 CMR 15.00 HAS BEEN PROVIDED ON PLAN ENTITLED "LOT 2 SEWAGE DISPOSAL SYSTEM" BY LANDTECH CONSULTANTS, INC. AND DATED 3/28/07.

## CONSTRUCTION NOTES

1. CONTRACTOR SHALL CONTACT 'DIGSAFE' AT 1-888-344-7233 AT LEAST 72 HOURS BEFORE EXCAVATING ON PUBLIC OR PRIVATE PROPERTY.
2. CONSTRUCTION MATERIALS AND CONSTRUCTION METHODOLOGY SHALL CONFORM TO THIS PLAN, TITLE 5, AND THE REQUIREMENTS OF THE BOARD OF HEALTH.
3. ANY DEVIATION IN CONSTRUCTION FROM THIS PLAN SHALL VOID ANY CERTIFICATION MADE RELATIVE TO THE SYSTEM UNLESS APPROVED IN WRITING BY THE LOCAL APPROVING AUTHORITY AND FORESITE ENGINEERING ASSOCIATES, INC.
4. ALL TANKS INCLUDING SEPTIC TANKS, DISTRIBUTION BOXES, DOSING CHAMBERS AND GREASE TRAPS, SHALL EITHER BE WATERTIGHT BY MANUFACTURER'S SPECIFICATIONS AND WARRANTY OR MADE WATERTIGHT WITH ASPHALT OR POLYMER SEALER.
5. ALL PRECAST CONCRETE TANKS AND DISTRIBUTION BOXES SHALL BE SET ON A MINIMUM OF SIX INCHES OF WELL COMPACTED CRUSHED STONE AND SHALL BE MADE WATER TIGHT.
6. DISTRIBUTION BOX OUTLET PIPE SHALL BE AT LEAST 2" ABOVE INLET OF ENVIRO-SEPTIC LINE WITH CONNECTING PIPE SLOPE NOT LESS THAN 2%.
7. DISTRIBUTION BOX SHALL BE SET ON A FIRM BASE OF EITHER SIX INCHES OF COMPACTED CRUSHED STONE OR A SIX-INCH THICK CONCRETE PAD WITH AN AREA 1.5 TIMES THE BOTTOM AREA OF THE DISTRIBUTION BOX.
8. AN INLET TEE SHALL BE INSTALLED IN THE DISTRIBUTION BOX WHEN THE SYSTEM IS A PUMP SYSTEM OR WHEN THE SLOPE OF THE INLET PIPE EXCEEDS 8%.
9. SYSTEM SHALL BE VENTED THROUGH THE BUILDING PLUMBING OR AS SHOWN ON THE SYSTEM PROFILE.
10. ALL SURFACES SHALL BE SCARIFIED PRIOR TO THE PLACEMENT OF FILL.
11. ALL UNSUITABLE MATERIAL ENCOUNTERED IN THE EXCAVATION SHALL BE REMOVED.
12. ALL CRUSHED STONE USED IN THE CONSTRUCTION OF THE SEWAGE DISPOSAL SYSTEM SHALL BE THE SIZE SPECIFIED, DURABLE AND DOUBLE WASHED.
13. WHEN GRAVEL FILL IS REQUIRED, ALL ORGANIC MATERIAL WITHIN 5 FEET OF THE PROPOSED LEACHING FACILITY SHALL BE REMOVED AND REPLACED WITH WELL COMPACTED GRANULAR FILL MEETING THE REQUIREMENTS OF 310 CMR 15.255.
14. ALL BACKFILL AND BREAKOUT FILL REQUIRED SHALL BE CLEAN EARTHEN MATERIAL FREE OF CONSTRUCTION DEBRIS, STUMPS, BOULDERS AND FROZEN EARTH. FILL MATERIAL SHALL BE PLACED IN A MANNER THAT WILL ENSURE RUNOFF AND PREVENT EROSION.
15. SEWAGE DISPOSAL SYSTEM CORNERS SHALL BE STAKED AND FLAGGED BY A PROFESSSIONAL ENGINEER OR PROFESSIONAL LAND SURVEYOR PRIOR TO THE START OF CONSTRUCTION.
16. ALL SYSTEM COMPONENTS SHALL BE MARKED WITH MAGNETIC MARKING TAPE OR A COMPARABLE MEANS IN ORDER TO LOCATE THEM ONCE BURIED.
17. A BENCHMARK SHALL BE TRANSFERRED TO WITHIN 50' OF THE SYSTEM PRIOR TO CONSTRUCTION.

RECEIVED
AUG - 2 2007
ACTON CONSERVATION COMMISSION

COMMONWEALTH OF MASSACHUSETTS
SCOTT P. HAYES
CIVIL
No. 41017
REGISTERED PROFESSIONAL ENGINEER
7/24/07

# SEWAGE DISPOSAL SYSTEM DESIGN PLAN

LOCATION:

**LOT 3A**
45 MAIN STREET
ACTON, MA 01720

APPLICANT:
MERIDIAN CONSTRUCTION CO., INC.
P.O. BOX 2170
ACTON, MASSACHUSETTS 01720

REV. JULY 24, 2007

| DATE: JULY 10, 2007 | SCALE: 1 INCH = 20 FEET |
|---|---|

www.foresitel.com
FORESITE ENGINEERING
ENGINEERING · SURVEYING · PLANNING
16 Gleasondale Road Suite 1-1
Stow, Massachusetts 01775
Phone: (978) 461-2350

1434LOT1.2D