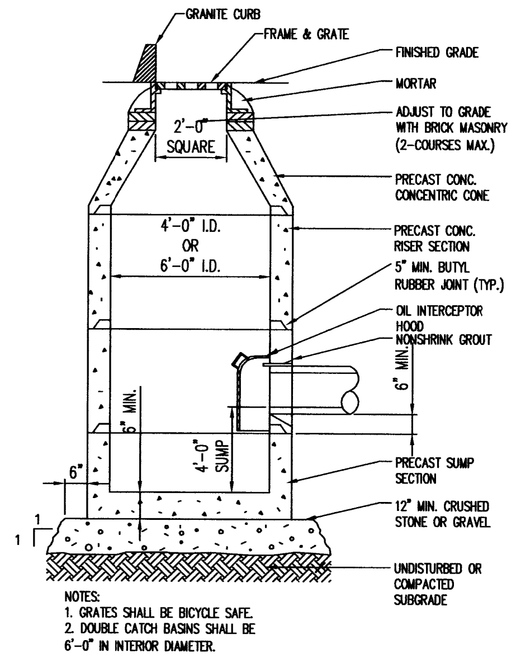

NOTES:
1. GRATES SHALL BE BICYCLE SAFE.
2. DOUBLE CATCH BASINS SHALL BE 6'-0" IN INTERIOR DIAMETER.

CATCH BASIN
NOT TO SCALE

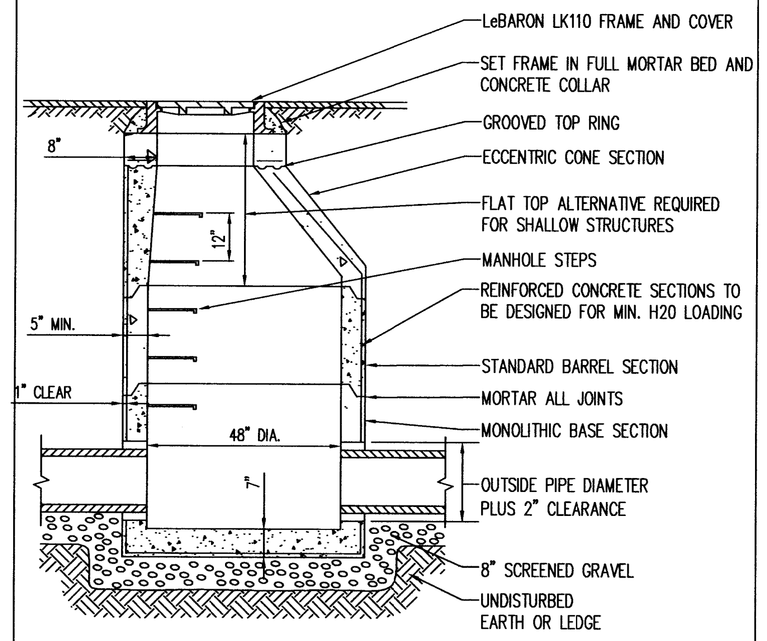

PRECAST CONCRETE DRAIN MANHOLE
NOT TO SCALE

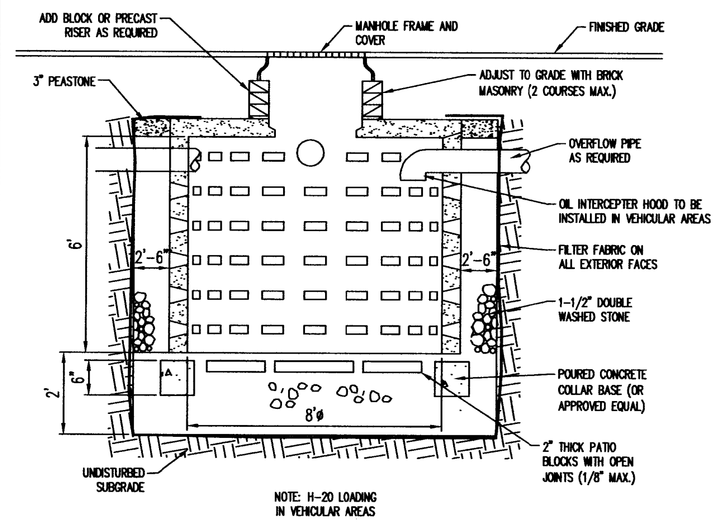

NOTE: H-20 LOADING IN VEHICULAR AREAS

LEACHING CATCH BASIN/DRYWELL
NOT TO SCALE

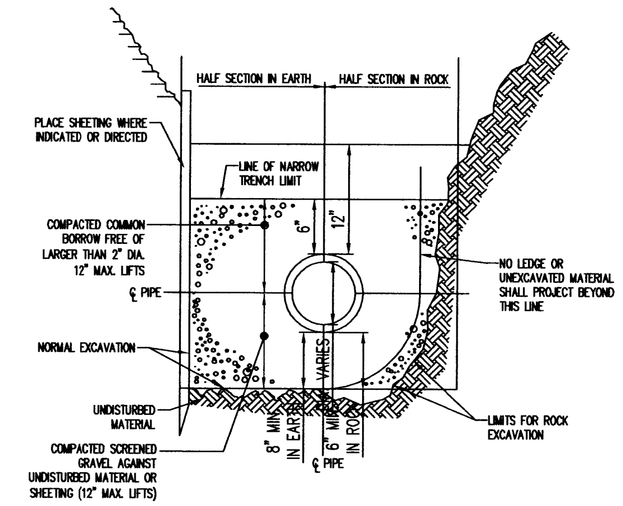

TYPICAL TRENCH DETAIL
NOT TO SCALE

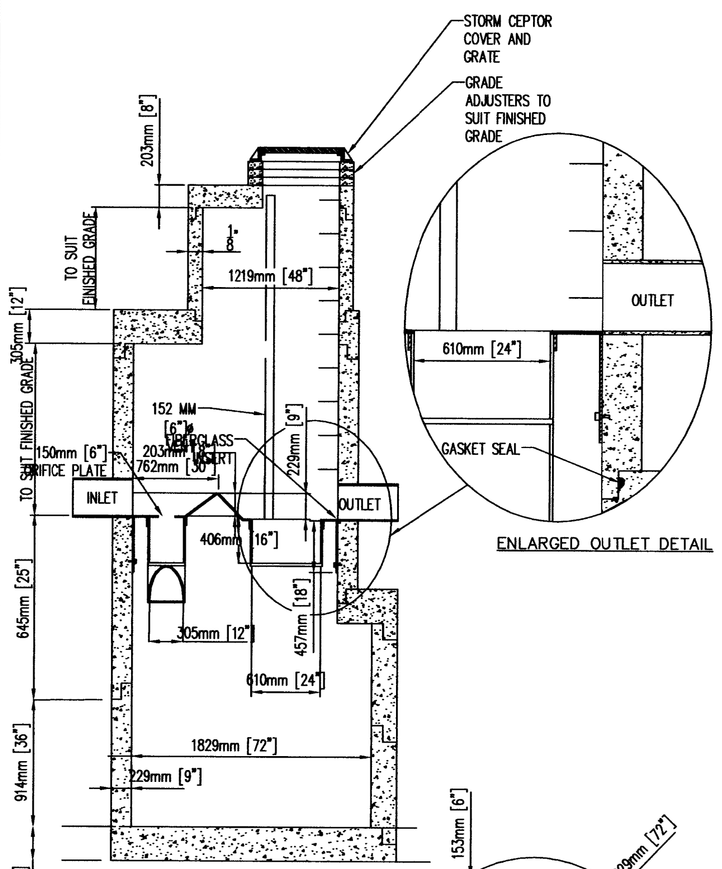

STORMCEPTOR IS PROTECTED BY ONE OR MORE OF THE FOLLOWING PATENTS:
CANADIAN PATENT NO. 2,009,208
CANADIAN PATENT NO. 2,137,942
U.S. PATENT NO. 4,985,148
U.S. PATENT NO. 5,498,331
U.S. PATENT NO. 5,725,760
U.S. PATENT NO. 5,753,115

NOTES:
1. DIMENSIONS MAY VARY REGIONALLY DUE TO DIFFERENT MANUFACTURER'S.
2. ACCESS WAY IS OFFSET TO ALLOW INSPECTION AND MAINTENANCE FROM THE SURFACE.
3. PIPE INSTALLATION BY GROUTING OR FLEXIBLE BOOTS.
4. FLEXIBLE BOOTS MAY NOT BE SUITABLE FOR ALL INSTALLATIONS. PLEASE CONTACT YOUR SALES REPRESENTATIVE FOR FURTHER INFORMATION.
5. 610 MM [24"] OUTLET TO BE USED FOR CLEANOUT ACCESS TO THE TREATMENT CHAMBER.
6. SAFETY GRATES FOR THE 610 MM [24"] OUTLET ARE AVAILABLE.
7. A 6" EARTHEN BERM SHALL BE PLACED ON THE DOWN STREAM SIDE OF ALL UN-PAVED DROP INLETS.

STC 900 PRECAST CONCRETE STORMCEPTOR FIBERGLASS DISC DESIGN – 900 U.S. GALLON CAPACITY
NOT TO SCALE

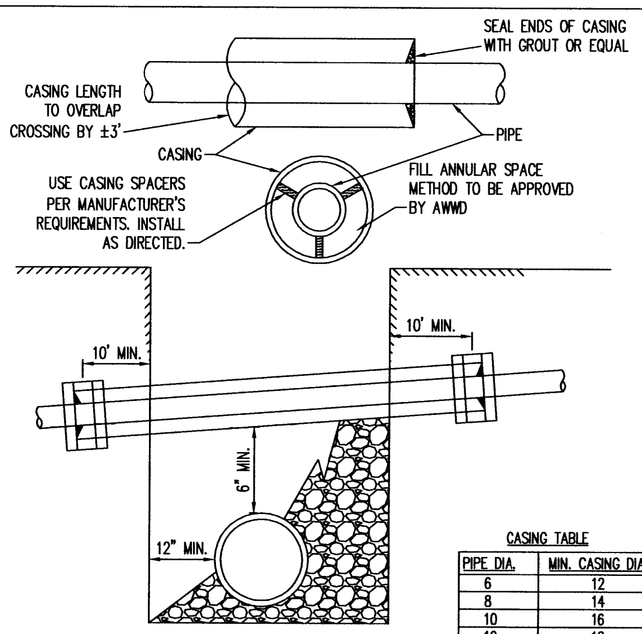

NOTE:
1. SEWER LINES SHALL BE 10' FROM WATER LINES.
2. COMPLY WITH ALL REGULATORY REQUIREMENTS OF JURISDICTIONAL AUTHORITY.
3. PIPE SHALL BE DUCTILE IRON RESTRAINED JOINT WITHIN CASING.

CASING TABLE

PIPE DIA.	MIN. CASING DIA.
6	12
8	14
10	16
12	18
14	20
16	22

SCHEDULE 20 STEEL PIPE UNLESS OTHERWISE INDICATED.

UTILITY CROSSING DETAIL
(OR EQUAL)
NOT TO SCALE

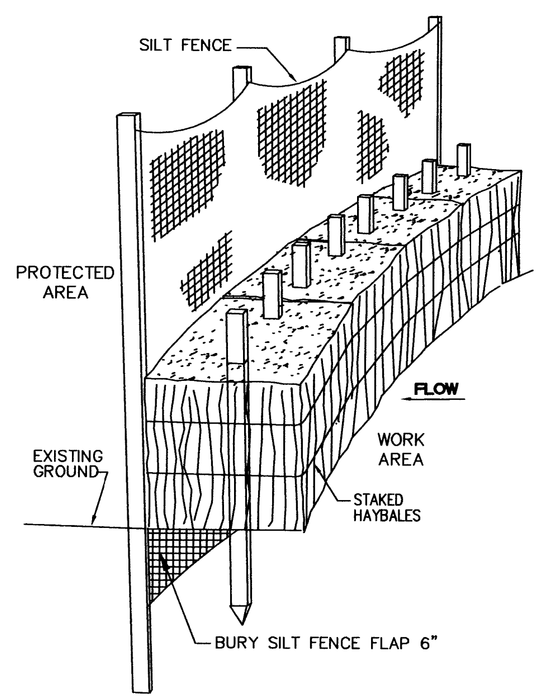

SILT FENCE/HAYBALE BARRIER DETAIL
NOT TO SCALE

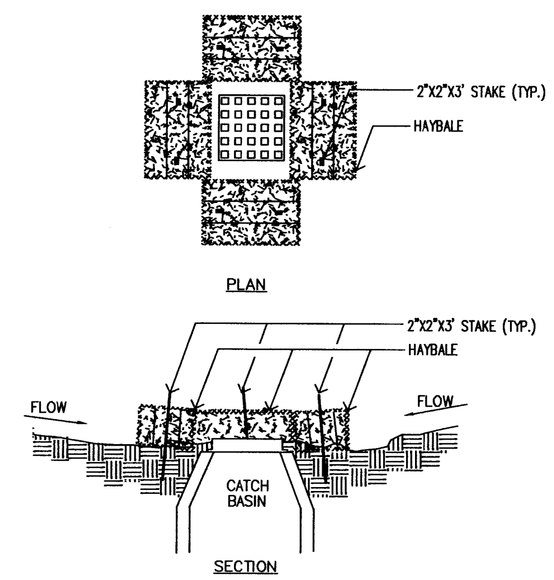

CATCH BASIN FILTER
NOT TO SCALE

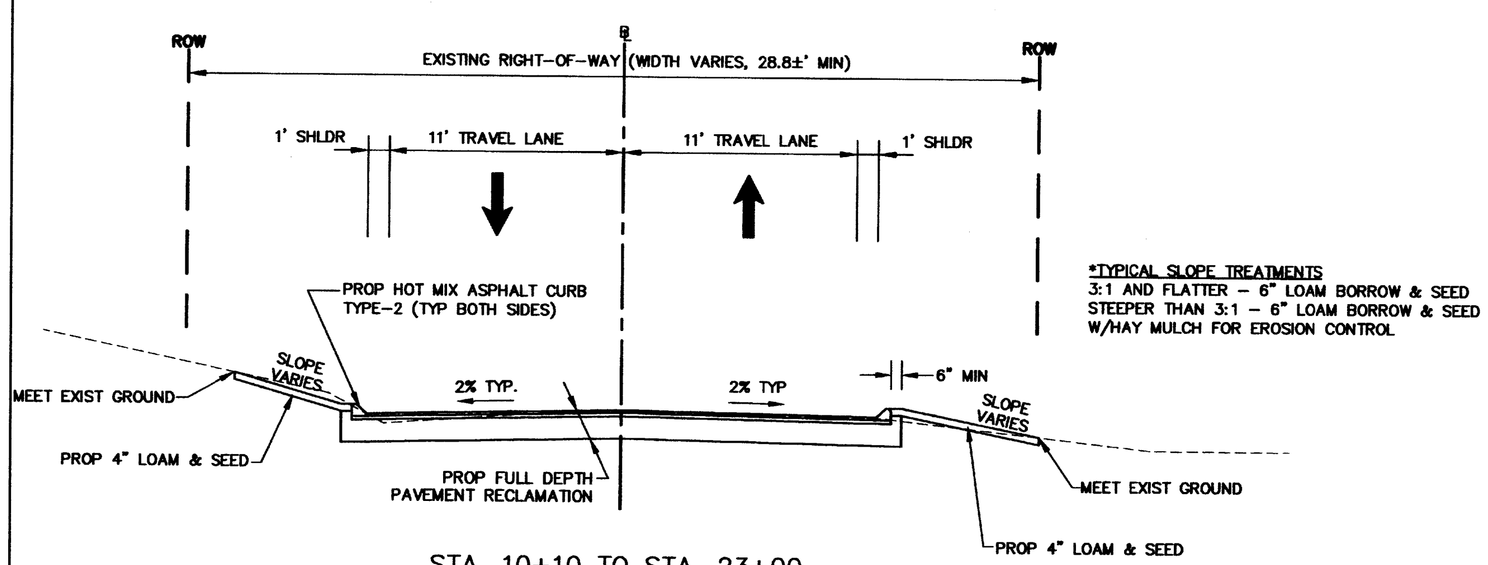

*TYPICAL SLOPE TREATMENTS
3:1 AND FLATTER – 6" LOAM BORROW & SEED
STEEPER THAN 3:1 – 6" LOAM BORROW & SEED W/HAY MULCH FOR EROSION CONTROL

STA. 10+10 TO STA. 23+00

SUDBURY ROAD
NOT TO SCALE

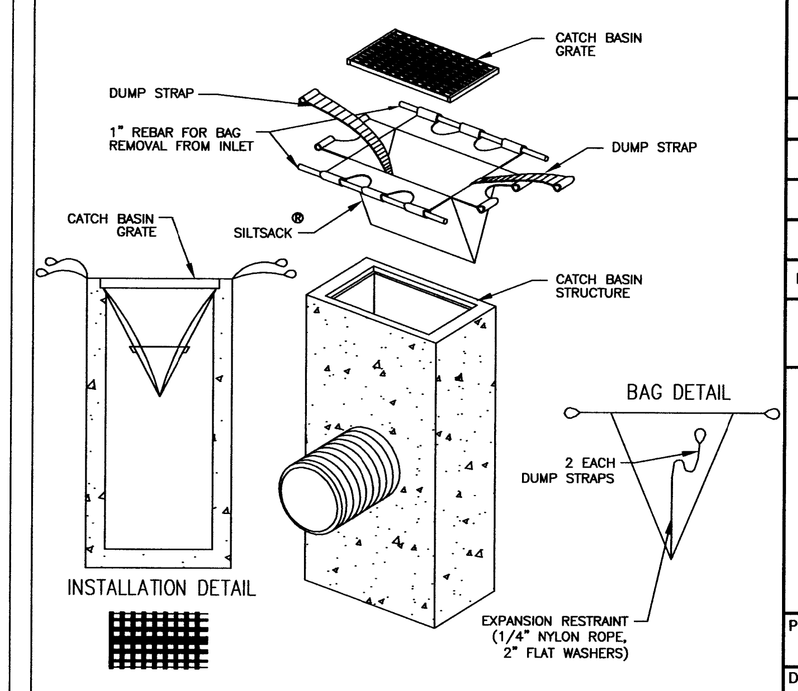

SOIL EROSION SACK
NOT TO SCALE

PREPARED FOR:

WEST CONCORD DEVELOPMENT LLC.
BURLINGTON, MA 01803

BEALS · ASSOCIATES INC.
98 NORTH WASHINGTON STREET · BOSTON, MASSACHUSETTS 02114
PHONE: 617-742-3554 · FAX: 617-742-0310

NOTE:
UTILITIES SHALL BE VERIFIED IN THE FIELD PRIOR TO CONSTRUCTION

GRAPHIC SCALE
20 0 10 20 40 80
(IN FEET)
1 inch = 20 ft.

NO.	REVISION/ISSUE	DATE

DETAILS

PLANS TO ACCOMPANY A NOTICE OF INTENT FOR SUDBURY ROAD IN THE TOWN OF ACTON, MASSACHUSETTS

PROJECT	DESIGN	SHEET
C-472.08	GMS	5 OF 5
DATE JANUARY 5, 2009	CHECKED CAT	
SCALE AS SHOWN	REVISED GMS	

S:\Data\C-472.01-Concord\Autocad\Acton NOI\Civil base westside drive (rev 12-30-08).dwg, 1/7/2009 9:35:41 AM, \\nasserver1\HP Designjet 4500ps HP-GL/2