PARE PROJECT NO. 10122.01

NOTICE OF INTENT

pursuant to

The Regulations of the Massachusetts Wetlands Protection Act
310 CMR 10.00

and

The Town of Acton Wetlands Protection Bylaw

NAGOG POND DAM REPAIRS

Acton, Massachusetts

Applicant:

Concord Department of Public Works
C/O Alan Cathcart, Water/Sewer Superintendent
135 Keyes Road
Concord, MA 01742

January 2012

Engineers | Scientists | Planners

PARECORP.COM

PARE CORPORATION

January 31, 2012

Tom Tidman, Conservation Agent
Acton Conservation Commission
472 Main Street
Acton, MA 01720

Re: **Notice of Intent**
Nagog Pond Dam Repairs
Acton, MA
PARE Project No. 10122.01

Dear Mr. Tidman and Members of the Acton Conservation Commission:

On behalf of the Town of Concord Department of Public Works (Concord DPW) and pursuant to the Regulations of the Massachusetts Wetlands Protection Act 310 CMR 10.00, Pare Corporation (PARE) is pleased to present the attached Notice of Intent for your review. Enclosed are the following:

- One (1) original and three (3) copies of a Notice of Intent for the above-referenced project, including the NOI Form, Fee Transmittal Form, Figures, Abutter Notification Information, a Narrative Project Description, Wetland Delineation Documentation, and Reduced-Scale Project Plans; and
- One (1) full size set of Project Plans, dated January 2012, prepared by Pare Corporation; and

A PDF copy of the Notice of Intent has been forwarded to the Conservation Commission via e-mail.

Please note that abutters are being notified via certificate of mailing as provided for under 310 CMR 10.05(4)(a). Proof of mailing will be supplied at the public hearing. As the subject property is a large lot over 50 acres in size with several hundred abutters, property owners within 1,000 feet of the project limits will be notified, as provided for within the document entitled "DEP Guide to Abutter Notification" dated April 8, 1994.

As indicated on WPA Form 3, no filing fee shall be assessed for projects of any city, town, county, or district of the Commonwealth, and therefore the Town of Concord Department of Public works is exempt from the Notice of Intent filing fee requirement.

The Acton Wetlands Protection Bylaw provides an exemption that states: "*No Notice of Intent hereunder need be filed in connection with maintaining, repairing, or replacing, but not substantially changing or enlarging, an existing and lawfully located structure or facility used in the service of the public to provide electric, gas, water, telephone, or telecommunication services.*"

As the impoundment provides public water supply to the Town of Concord, the proposed dam repairs qualify for an exemption from any additional municipal Notice of Intent requirements specified within the Bylaw.

10 LINCOLN ROAD, SUITE 103 FOXBORO, MA 02035
T 508.543.1755 F 508.543.1881

8 BLACKSTONE VALLEY PLACE LINCOLN, RI 02865
T 401.334.4100 F 401.334.4108

Nagog Pond Dam is classified as a **large** size, **significant hazard potential** (Class II) structure under Commonwealth of Massachusetts dam safety rules and regulations stated in 302 CMR 10.00 and amended by Chapter 330 of the Acts of 2002. The repairs are necessary to comply with current dam safety regulations and to ensure the future safety of the downstream public, protect the public water supply function provided by the impoundment, and preserve the environmental resources created by the dam.

Recent inspections have found the dam to be in poor condition, with significant structural and operational deficiencies. The proposed project will address these deficiencies by implementing the following repairs and improvements to the dam: chipping, removal, and replacement of deteriorated concrete along the length of the dam; buttressing of the dam section to increase stability and extend the life expectancy of the dam; providing stone over wash protection and collection drain to address freeboard limitations; removal of large trees from the vicinity of the dam in accordance with current dam safety policy; and appurtenant work to improve the integrity of the dam and maintain its water supply functions.

The proposed project will result in permanent impacts to approximately 124 linear feet of Bank, and temporary construction impacts to Bordering Vegetated Wetland, Bank, and Land Under Water. Wetland impacts are unavoidable due to the nature of the work, and the selected alternative for each component of the project represent that which minimizes impacts to the extents practicable.

Thank you for your consideration of this application. If you have any questions, please feel free to contact us.

Sincerely,
Pare Corporation

Allen R. Orsi, P.E.
Senior Project Engineer

Lauren M. Hastings.
Senior Environmental Scientist

ARO/LH

cc: DEP Central Regional Office
Alan Cathcart, Concord Water/Sewer Superintendent
File

Z:\Mass\10122.01 Nagog Pond Dam\REPORTS\NOI\NOI-Cover-Letter.doc

TABLE OF CONTENTS

Section 1 Administrative Documentation

WPA Form 3 - Notice of Intent
Filing Fee Transmittal Form

Section 2 Abutter Notification Information

Notification to Abutters
Certified List of Abutters
1,000' Radius Map with Assessor's Parcels

Section 3 Figures

Figure 1 - Site Location Map
Figure 2 - Annotated MASSGIS Aerial Photograph
Figure 3 - FEMA Flood Insurance Rate Map

Section 4 Project Narrative

Section 5 Wetland Delineation Documentation

Wetland Field Report
Delineation Data Forms
Annotated Site Photographs

Section 6 Project Plans, prepared by Pare Corporation, dated January 2012, entitled "Nagog Pond Dam Repairs"

1. Administrative Documentation

WPA Form 3 – Notice of Intent
Filing Fee Transmittal Form

Massachusetts Department of Environmental Protection
Bureau of Resource Protection - Wetlands

WPA Form 3 – Notice of Intent

Massachusetts Wetlands Protection Act M.G.L. c. 131, §40

Provided by MassDEP:

MassDEP File Number

Document Transaction Number

Acton
City/Town

Important: When filling out forms on the computer, use only the tab key to move your cursor - do not use the return key.

Note: Before completing this form consult your local Conservation Commission regarding any municipal bylaw or ordinance.

A. General Information

1. Project Location (**Note:** electronic filers will click on button to locate project site):

339 Nagog Hill Road — a. Street Address
Acton — b. City/Town
MA — c. Zip Code

Latitude and Longitude:
42° 30' 36" — d. Latitude
-71° 26' 0" — e. Longitude

C4 — f. Assessors Map/Plat Number
14 — g. Parcel /Lot Number

2. Applicant:

Alan — a. First Name
Cathcart — b. Last Name
Town of Concord Department of Public Works — c. Organization
135 Keyes Road — d. Street Address
Concord — e. City/Town
MA — f. State
01742 — g. Zip Code
978-318-3250 — h. Phone Number
978-318-3204 — i. Fax Number
acathcart@concordma.gov — j. Email Address

3. Property owner (required if different from applicant): ☐ Check if more than one owner

a. First Name
b. Last Name
Town of Concord — c. Organization
135 Keyes Road — d. Street Address
Concord — e. City/Town
MA — f. State
01742 — g. Zip Code
h. Phone Number
i. Fax Number
j. Email address

4. Representative (if any):

Allen — a. First Name
Orsi, P.E. — b. Last Name
Pare Corporation — c. Company
10 Lincoln Road, Suite 103 — d. Street Address
Foxbroro — e. City/Town
MA — f. State
02035 — g. Zip Code
508-543-1755 — h. Phone Number
508-543-1881 — i. Fax Number
AOrsi@parecorp.com — j. Email address

5. Total WPA Fee Paid (from NOI Wetland Fee Transmittal Form):

$0 (fee exempt) — a. Total Fee Paid
$0 — b. State Fee Paid
$0 — c. City/Town Fee Paid

A. General Information (continued)

6. General Project Description:

Repairs and improvements to Nagog Pond Dam, as described in the Narrative Project Description of this Notice of Intent.

7a. Project Type Checklist:

1. ☐ Single Family Home
2. ☐ Residential Subdivision
3. ☐ Limited Project Driveway Crossing
4. ☐ Commercial/Industrial
5. ☐ Dock/Pier
6. ☐ Utilities
7. ☐ Coastal Engineering Structure
8. ☐ Agriculture (e.g., cranberries, forestry)
9. ☐ Transportation
10. ☒ Other – dam repair project

7b. Is any portion of the proposed activity eligible to be treated as a limited project subject to 310 CMR 10.24 (coastal) or 310 CMR 10.53 (inland)?

1. ☒ Yes ☐ No If yes, describe which limited project applies to this project:

310 CMR 10.53(3) i: maintenance, repair, and improvement of a dam
2. Limited Project

8. Property recorded at the Registry of Deeds for:

Middlesex a. County	____ b. Certificate # (if registered land)
6923 c. Book	239 d. Page Number

B. Buffer Zone & Resource Area Impacts (temporary & permanent)

1. ☐ Buffer Zone Only – Check if the project is located only in the Buffer Zone of a Bordering Vegetated Wetland, Inland Bank, or Coastal Resource Area.
2. ☒ Inland Resource Areas (see 310 CMR 10.54-10.58; if not applicable, go to Section B.3, Coastal Resource Areas).

Check all that apply below. Attach narrative and any supporting documentation describing how the project will meet all performance standards for each of the resource areas altered, including standards requiring consideration of alternative project design or location.

For all projects affecting other Resource Areas, please attach a narrative explaining how the resource area was delineated.

Resource Area	Size of Proposed Alteration	Proposed Replacement (if any)
a. ☒ Bank	315 (124 perm., 191 temp*) 1. linear feet	0 2. linear feet
b. ☒ Bordering Vegetated Wetland	507* (all temporary) 1. square feet	0 2. square feet
c. ☒ Land Under Waterbodies and Waterways	2,115* (all temporary) 1. square feet 396 (350 temporary) 3. cubic yards dredged	0 2. square feet ***Temporary impacts will be restored upon project completion.**

B. Buffer Zone & Resource Area Impacts (temporary & permanent) (cont'd)

Resource Area	Size of Proposed Alteration	Proposed Replacement (if any)
d. ☐ Bordering Land Subject to Flooding	0 (1. square feet)	0 (2. square feet)
	0 (3. cubic feet of flood storage lost)	0 (4. cubic feet replaced)
e. ☐ Isolated Land Subject to Flooding	0 (1. square feet)	
	0 (2. cubic feet of flood storage lost)	0 (3. cubic feet replaced)
f. ☐ Riverfront Area	1. Name of Waterway (if available)	

2. Width of Riverfront Area (check one):

☐ 25 ft. - Designated Densely Developed Areas only

☐ 100 ft. - New agricultural projects only

☐ 200 ft. - All other projects

3. Total area of Riverfront Area on the site of the proposed project: _____ square feet

4. Proposed alteration of the Riverfront Area:

a. total square feet _____ b. square feet within 100 ft. _____ c. square feet between 100 ft. and 200 _____

5. Has an alternatives analysis been done and is it attached to this NOI? ☒ Yes ☐ No

6. Was the lot where the activity is proposed created prior to August 1, 1996? ☒ Yes ☐ No

3. ☐ Coastal Resource Areas: (See 310 CMR 10.25-10.35)

Check all that apply below. Attach narrative and supporting documentation describing how the project will meet all performance standards for each of the resource areas altered, including standards requiring consideration of alternative project design or location.

Online Users: Include your document transaction number (provided on your receipt page) with all supplementary information you submit to the Department.

Resource Area	Size of Proposed Alteration	Proposed Replacement (if any)
a. ☐ Designated Port Areas	Indicate size under Land Under the Ocean, below	
b. ☐ Land Under the Ocean	1. square feet	
	2. cubic yards dredged	
c. ☐ Barrier Beach	Indicate size under Coastal Beaches and/or Coastal Dunes below	
d. ☐ Coastal Beaches	1. square feet	2. cubic yards beach nourishment
e. ☐ Coastal Dunes	1. square feet	2. cubic yards dune nourishment

B. Buffer Zone & Resource Area Impacts (temporary & permanent) (cont'd)

	Size of Proposed Alteration	Proposed Replacement (if any)
f. ☐ Coastal Banks	1. linear feet	
g. ☐ Rocky Intertidal Shores	1. square feet	
h. ☐ Salt Marshes	1. square feet	2. sq ft restoration, rehab., creation
i. ☐ Land Under Salt Ponds	1. square feet 2. cubic yards dredged	
j. ☐ Land Containing Shellfish	1. square feet	
k. ☐ Fish Runs	Indicate size under Coastal Banks, inland Bank, Land Under the Ocean, and/or inland Land Under Waterbodies and Waterways, above 1. cubic yards dredged	
l. ☐ Land Subject to Coastal Storm Flowage	1. square feet	

4. ☐ Restoration/Enhancement
If the project is for the purpose of restoring or enhancing a wetland resource area in addition to the square footage that has been entered in Section B.2.b or B.3.h above, please enter the additional amount here.

a. square feet of BVW

b. square feet of Salt Marsh

5. ☐ Project Involves Stream Crossings

a. number of new stream crossings

b. number of replacement stream crossings

C. Other Applicable Standards and Requirements

Streamlined Massachusetts Endangered Species Act/Wetlands Protection Act Review

1. Is any portion of the proposed project located in **Estimated Habitat of Rare Wildlife** as indicated on the most recent Estimated Habitat Map of State-Listed Rare Wetland Wildlife published by the Natural Heritage and Endangered Species Program (NHESP)? To view habitat maps, see the *Massachusetts Natural Heritage Atlas* or go to http://www.mass.gov/dfwele/dfw/nhesp/regulatory_review/priority_habitat/online_viewer.htm.

a. ☐ Yes ☒ No **If yes, include proof of mailing or hand delivery of NOI to:**

Natural Heritage and Endangered Species Program
Division of Fisheries and Wildlife
Route 135, North Drive
Westborough, MA 01581

2008
b. Date of map

C. Other Applicable Standards and Requirements (cont'd)

If *yes*, the project is also subject to Massachusetts Endangered Species Act (MESA) review (321 CMR 10.18). To qualify for a streamlined, 30-day, MESA/Wetlands Protection Act review, please complete Section C.1.C, and include requested materials with this Notice of Intent (NOI); *OR* complete Section C.1.d, if applicable. *If MESA supplemental information is not included with the NOI, by completing Section 1 of this form, the NHESP will require a separate MESA filing which may take up to 90 days to review (unless noted exceptions in Section 2 apply, see below).*

1. c. Submit Supplemental Information for Endangered Species Review*

   1. ☐ Percentage/acreage of property to be altered:

      (a) within wetland Resource Area _____ percentage/acreage

      (b) outside Resource Area _____ percentage/acreage

   2. ☐ Assessor's Map or right-of-way plan of site

   3. ☐ Project plans for entire project site, including wetland resource areas and areas outside of wetlands jurisdiction, showing existing and proposed conditions, existing and proposed tree/vegetation clearing line, and clearly demarcated limits of work ******

      (a) ☐ Project description (including description of impacts outside of wetland resource area & buffer zone)

      (b) ☐ Photographs representative of the site

      (c) ☐ MESA filing fee (fee information available at: http://www.mass.gov/dfwele/dfw/nhesp/regulatory_review/mesa/mesa_fee_schedule.htm). Make check payable to "Commonwealth of Massachusetts - NHESP" and ***mail to NHESP*** at above address

      *Projects altering **10 or more acres** of land, also submit:*

      (d) ☐ Vegetation cover type map of site

      (e) ☐ Project plans showing Priority & Estimated Habitat boundaries

   d. OR Check One of the Following

   1. ☐ Project is exempt from MESA review.
      Attach applicant letter indicating which MESA exemption applies. (See 321 CMR 10.14, http://www.mass.gov/dfwele/dfw/nhesp/regulatory_review/mesa/mesa_exemptions.htm; the NOI must still be sent to NHESP if the project is within estimated habitat pursuant to 310 CMR 10.37 and 10.59.)

   2. ☐ Separate MESA review ongoing. _____ a. NHESP Tracking # _____ b. Date submitted to NHESP

---

* Some projects **not** in Estimated Habitat may be located in Priority Habitat, and require NHESP review (see http://www.mass.gov/dfwele/dfw/nhesp/nhesp.htm, regulatory review tab). Priority Habitat includes habitat for state-listed plants and strictly upland species not protected by the Wetlands Protection Act.

** MESA projects may not be segmented (321 CMR 10.16). The applicant must disclose full development plans even if such plans are not required as part of the Notice of Intent process.

C. Other Applicable Standards and Requirements (cont'd)

3. ☐ Separate MESA review completed.
Include copy of NHESP "no Take" determination or valid Conservation & Management Permit with approved plan.

2. For coastal projects only, is any portion of the proposed project located below the mean high water line or in a fish run?

a. ☐ Not applicable – project is in inland resource area only

b. ☐ Yes ☐ No If yes, include proof of mailing or hand delivery of NOI to either:

South Shore - Cohasset to Rhode Island, and the Cape & Islands:

Division of Marine Fisheries -
Southeast Marine Fisheries Station
Attn: Environmental Reviewer
1213 Purchase Street – 3rd Floor
New Bedford, MA 02740-6694

North Shore - Hull to New Hampshire:

Division of Marine Fisheries -
North Shore Office
Attn: Environmental Reviewer
30 Emerson Avenue
Gloucester, MA 01930

Also if yes, the project may require a Chapter 91 license. For coastal towns in the Northeast Region, please contact MassDEP's Boston Office. For coastal towns in the Southeast Region, please contact MassDEP's Southeast Regional Office.

3. Is any portion of the proposed project within an Area of Critical Environmental Concern (ACEC)?

a. ☐ Yes ☒ No If yes, provide name of ACEC (see instructions to WPA Form 3 or MassDEP Website for ACEC locations). **Note:** electronic filers click on Website.

b. ACEC

Online Users: Include your document transaction number (provided on your receipt page) with all supplementary information you submit to the Department.

4. Is any portion of the proposed project within an area designated as an Outstanding Resource Water (ORW) as designated in the Massachusetts Surface Water Quality Standards, 314 CMR 4.00?

a. ☒ Yes ☐ No

5. Is any portion of the site subject to a Wetlands Restriction Order under the Inland Wetlands Restriction Act (M.G.L. c. 131, § 40A) or the Coastal Wetlands Restriction Act (M.G.L. c. 130, § 105)?

a. ☐ Yes ☒ No

6. Is this project subject to provisions of the MassDEP Stormwater Management Standards?

a. ☐ Yes. Attach a copy of the Stormwater Report as required by the Stormwater Management Standards per 310 CMR 10.05(6)(k)-(q) and check if:

1. ☐ Applying for Low Impact Development (LID) site design credits (as described in Stormwater Management Handbook Vol. 2, Chapter 3)

2. ☐ A portion of the site constitutes redevelopment

3. ☐ Proprietary BMPs are included in the Stormwater Management System.

b. ☒ No. Check why the project is exempt: dam repair project with no stormwater implications

1. ☐ Single-family house

C. Other Applicable Standards and Requirements (cont'd)

2. ☐ Emergency road repair

3. ☐ Small Residential Subdivision (less than or equal to 4 single-family houses or less than or equal to 4 units in multi-family housing project) with no discharge to Critical Areas.

D. Additional Information

Applicants must include the following with this Notice of Intent (NOI). See instructions for details.

Online Users: Attach the document transaction number (provided on your receipt page) for any of the following information you submit to the Department.

1. ☒ USGS or other map of the area (along with a narrative description, if necessary) containing sufficient information for the Conservation Commission and the Department to locate the site. (Electronic filers may omit this item.)

2. ☒ Plans identifying the location of proposed activities (including activities proposed to serve as a Bordering Vegetated Wetland [BVW] replication area or other mitigating measure) relative to the boundaries of each affected resource area.

3. ☒ Identify the method for BVW and other resource area boundary delineations (MassDEP BVW Field Data Form(s), Determination of Applicability, Order of Resource Area Delineation, etc.), and attach documentation of the methodology.

4. ☒ List the titles and dates for all plans and other materials submitted with this NOI.

"Nagog Pond Dam Repairs"
a. Plan Title

Pare Corporation
b. Prepared By

J. Matthew Bellisle, P.E.
c. Signed and Stamped by

January 2012
d. Final Revision Date

As noted
e. Scale

f. Additional Plan or Document Title

g. Date

5. ☐ If there is more than one property owner, please attach a list of these property owners not listed on this form.

6. ☐ Attach proof of mailing for Natural Heritage and Endangered Species Program, if needed.

7. ☐ Attach proof of mailing for Massachusetts Division of Marine Fisheries, if needed.

8. ☒ Attach NOI Wetland Fee Transmittal Form

9. ☐ Attach Stormwater Report, if needed.

Provided by MassDEP:
MassDEP File Number
Document Transaction Number
Acton
City/Town

E. Fees

1. ☒ Fee Exempt: No filing fee shall be assessed for projects of any city, town, county, or district of the Commonwealth, federally recognized Indian tribe housing authority, municipal housing authority, or the Massachusetts Bay Transportation Authority.

Applicants must submit the following information (in addition to pages 1 and 2 of the NOI Wetland Fee Transmittal Form) to confirm fee payment:

2. Municipal Check Number	3. Check date
4. State Check Number	5. Check date
Pare Corporation	
6. Payor name on check: First Name	7. Payor name on check: Last Name

F. Signatures and Submittal Requirements

I hereby certify under the penalties of perjury that the foregoing Notice of Intent and accompanying plans, documents, and supporting data are true and complete to the best of my knowledge. I understand that the Conservation Commission will place notification of this Notice in a local newspaper at the expense of the applicant in accordance with the wetlands regulations, 310 CMR 10.05(5)(a).

I further certify under penalties of perjury that all abutters were notified of this application, pursuant to the requirements of M.G.L. c. 131, § 40. Notice must be made by Certificate of Mailing or in writing by hand delivery or certified mail (return receipt requested) to all abutters within 100 feet of the property line of the project location.

1. Signature of Applicant	2. Date
3. Signature of Property Owner (if different)	4. Date 1/31/12
5. Signature of Representative (if any)	6. Date

For Conservation Commission:
Two copies of the completed Notice of Intent (Form 3), including supporting plans and documents, two copies of the NOI Wetland Fee Transmittal Form, and the city/town fee payment, to the Conservation Commission by certified mail or hand delivery.

For MassDEP:
One copy of the completed Notice of Intent (Form 3), including supporting plans and documents, one copy of the NOI Wetland Fee Transmittal Form, and a **copy** of the state fee payment to the MassDEP Regional Office (see Instructions) by certified mail or hand delivery.

Other:
If the applicant has checked the "yes" box in any part of Section C, Item 3, above, refer to that section and the Instructions for additional submittal requirements.

The original and copies must be sent simultaneously. Failure by the applicant to send copies in a timely manner may result in dismissal of the Notice of Intent.

E. Fees

1. ☒ Fee Exempt: No filing fee shall be assessed for projects of any city, town, county, or district of the Commonwealth, federally recognized Indian tribe housing authority, municipal housing authority, or the Massachusetts Bay Transportation Authority.

Applicants must submit the following information (in addition to pages 1 and 2 of the NOI Wetland Fee Transmittal Form) to confirm fee payment:

2. Municipal Check Number	3. Check date
4. State Check Number	5. Check date
Pare Corporation 6. Payor name on check: First Name	7. Payor name on check: Last Name

F. Signatures and Submittal Requirements

I hereby certify under the penalties of perjury that the foregoing Notice of Intent and accompanying plans, documents, and supporting data are true and complete to the best of my knowledge. I understand that the Conservation Commission will place notification of this Notice in a local newspaper at the expense of the applicant in accordance with the wetlands regulations, 310 CMR 10.05(5)(a).

I further certify under penalties of perjury that all abutters were notified of this application, pursuant to the requirements of M.G.L. c. 131, § 40. Notice must be made by Certificate of Mailing or in writing by hand delivery or certified mail (return receipt requested) to all abutters within 100 feet of the property line of the project location.

1. Signature of Applicant	2 - 2 - 12 2. Date
3. Signature of Property Owner (if different)	4. Date
5. Signature of Representative (if any)	6. Date

For Conservation Commission:
Two copies of the completed Notice of Intent (Form 3), including supporting plans and documents, two copies of the NOI Wetland Fee Transmittal Form, and the city/town fee payment, to the Conservation Commission by certified mail or hand delivery.

For MassDEP:
One copy of the completed Notice of Intent (Form 3), including supporting plans and documents, one copy of the NOI Wetland Fee Transmittal Form, and a **copy** of the state fee payment to the MassDEP Regional Office (see Instructions) by certified mail or hand delivery.

Other:
If the applicant has checked the "yes" box in any part of Section C, Item 3, above, refer to that section and the Instructions for additional submittal requirements.

The original and copies must be sent simultaneously. Failure by the applicant to send copies in a timely manner may result in dismissal of the Notice of Intent.

Massachusetts Department of Environmental Protection
Bureau of Resource Protection - Wetlands

NOI Wetland Fee Transmittal Form

Massachusetts Wetlands Protection Act M.G.L. c. 131, §40

Important: When filling out forms on the computer, use only the tab key to move your cursor - do not use the return key.

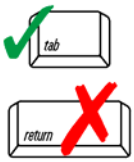

A. Applicant Information

1. Applicant:

Alan	Cathcart
a. First Name	b. Last Name

c. Organization: Town of Concord Department of Public Works

d. Mailing Address: 135 Keyes Road

Concord	MA	01742
e. City/Town	f. State	g. Zip Code

978-318-3250	978-318-3204	acathcart@concordma.gov
h. Phone Number	i. Fax Number	j. Email Address

2. Property Owner (if different):

a. First Name	b. Last Name

c. Organization: Town of Concord

d. Mailing Address: 133 Keyes Road

Concord	MA	01742
e. City/Town	f. State	g. Zip Code

978-318-3212		wrenault@concordma.gov
h. Phone Number	i. Fax Number	j. Email Address

3. Project Location:

Hazelnut Street	Acton
a. Street Address	b. City/Town

To calculate filing fees, refer to the category fee list and examples in the instructions for filling out WPA Form 3 (Notice of Intent).

B. Fees

The fee should be calculated using the following six-step process and worksheet. **Please see Instructions before filling out worksheet.**

Step 1/Type of Activity: Describe each type of activity that will occur in wetland resource area and buffer zone.

Step 2/Number of Activities: Identify the number of each type of activity.

Step 3/Individual Activity Fee: Identify each activity fee from the six project categories listed in the instructions.

Step 4/Subtotal Activity Fee: Multiply the number of activities (identified in Step 2) times the fee per category (identified in Step 3) to reach a subtotal fee amount. Note: If any of these activities are in a Riverfront Area in addition to another Resource Area or the Buffer Zone, the fee per activity should be multiplied by 1.5 and then added to the subtotal amount.

Step 5/Total Project Fee: Determine the total project fee by adding the subtotal amounts from Step 4.

Step 6/Fee Payments: To calculate the state share of the fee, divide the total fee in half and subtract $12.50. To calculate the city/town share of the fee, divide the total fee in half and add $12.50.

Massachusetts Department of Environmental Protection
Bureau of Resource Protection - Wetlands

NOI Wetland Fee Transmittal Form

Massachusetts Wetlands Protection Act M.G.L. c. 131, §40

B. Fees (continued)

Step 1/Type of Activity	Step 2/Number of Activities	Step 3/Individual Activity Fee	Step 4/Subtotal Activity Fee
Category 4b) dam (safety) work;	1	$0*	$0*

Step 5/Total Project Fee: _____

Step 6/Fee Payments:

Total Project Fee:	$0* (a. Total Fee from Step 5)
State share of filing Fee:	$0* (b. 1/2 Total Fee **less $**12.50)
City/Town share of filling Fee:	$0* (c. 1/2 Total Fee **plus** $12.50)

C. Submittal Requirements

a.) Complete pages 1 and 2 and send with a check or money order for the state share of the fee, payable to the Commonwealth of Massachusetts.

Department of Environmental Protection
Box 4062
Boston, MA 02211

b.) **To the Conservation Commission:** Send the Notice of Intent or Abbreviated Notice of Intent; a **copy** of this form; and the city/town fee payment.

To MassDEP Regional Office (see Instructions): Send a copy of the Notice of Intent or Abbreviated Notice of Intent; a **copy** of this form; and a **copy** of the state fee payment. (E-filers of Notices of Intent may submit these electronically.)

***Applicant is a town of the Commonwealth; fee-exempt**

2. Abutter Notification Information

Notification to Abutters
List of Abutters
1,000’ Radius Map with Assessor’s Parcels

NOTIFICATION TO ABUTTERS
UNDER THE MASSACHUSETTS WETLANDS PROTECTION ACT
AND THE TOWN OF ACTON WETLANDS BYLAW

In accordance with the second paragraph of Massachusetts General Laws Chapter 131, Section 40 and the Town of Acton Bylaws, you are hereby notified of the following:

The Applicant: Town of Concord Department of Public Works

Address 135 Keyes Road Phone _____

has filed a Notice of Intent with the Acton Conservation Commission seeking permission to remove, fill, dredge or alter an Area Subject to Protection under the Wetlands Protection Act.

Applicant's Representative: Allen R. Orsi, P.E. – Pare Corporation

Address 10 Lincoln Road, Suite 103, Foxborough, MA 02035 Phone (508) 543-1755

The address of the property where the activity is proposed Nagog Pond Dam – at southeast side of Nagog Pond, west of Hazelnut Street.

Town Atlas Plate/Map C-4 Parcel/Lot 14

Project Description Repairs to Nagog Pond Dam, a dam structure in poor condition that impounds Nagog Pond, a water supply source for the Town of Concord.

For more information please contact the Conservation Office at 978-929-6634 or email NR@acton-ma.gov. Copies of the Notice of Intent may be examined at the Conservation Office, Acton Town Hall, 472 Main Street, Acton between the hours of 9:00 A.M. and 4:30 P.M. Monday through Friday.

A Public Hearing will be held at the Acton Town Hall, 472 Main Street, on Wednesday, February 15, 2012 at 7:30 P.M.
(date)

The notice of the public hearing will be published at least five (5) days in advance in the Acton edition of the *Beacon* newspaper or *Metrowest Daily News*.

NOTE: You may also contact your local conservation commission or the nearest Department of Environmental Protection Regional Office* for the information about this application or, the Wetlands Protection Act. Acton is in the Central Region. To contact DEP, call:

***DEP Central Region: 508-792-7650**
627 Main Street, Worcester MA 01608

Town of Acton
472 Main Street
Acton, MA 01720
Telephone (978) 929-6621
Fax (978) 264-9630

* LOTS WITH "✓" ARE LOCATED WITHIN 1,000' RADIUS OF THE PROJECT AREA, AND WILL RECIEVE NOTIFICATION.

Brian McMullen
Assessor

Locus: 339 Nagog Hill Rd
Parcel ID: C4-14

Location	Parcel ID	Owner	Co-Owner	Mailing Address	City	State	Zip Code
582 GREAT RD	B4-5-	WILEY TIMOTHY & HEIDI J WILEY		8 GREAT RD	LITTLETON	MA	01460
581 GREAT RD	B4-6-	BARR KENNETH TRUSTEE	SPOONDRIFT REALTY TRUST	581 GREAT ROAD	ACTON	MA	01720
599 GREAT RD	B4-7-	ALEVIZOS NAGOG LLC (30%)	KVA NAGOG LLC (70%)	C/O NAGOG MALL LLC 396 WASHINGTON ST	WELLESLEY	MA	02482
1 NAGOG PK	B4-7-1	ALEVIZOS NAGOG LLC (30%)	KVA NAGOG LLC (70%)	C/O NAGOG MALL LLC 396 WASHINGTON ST	WELLESLEY	MA	02482
1 NAGOG PK BESIDE	B4-7-4	ALEVIZOS NAGOG LLC (30%)	KVA NAGOG LLC (70%)	C/O NAGOG MALL LLC 396 WASHINGTON ST	WELLESLEY	MA	02482
531 GREAT RD	B4-11-	NAGOG WOODS COMM. CORP.		VILLAGE OF NAGOG WOODS	ACTON	MA	01718
5 BREEZY POINT RD	B4-16-	KLIGER HAROLD M	NICHOLLS DEBORAH E	5 BREEZY POINT RD	ACTON	MA	01720
287 NAGOG HILL RD	C3-8-	ACTON WATER DISTRICT		PO BOX 953	ACTON	MA	01720
✓14 BREEZY POINT RD	C4-1-	ENGELL JAMES T	BRENNAN AINSLIE S	14 BREEZY POINT RD	ACTON	MA	01720
11 BREEZY POINT RD	C4-1-1	FRY WILLIAM A	FRY KELLY J	11 BREEZY POINT RD	ACTON	MA	01720
9 BREEZY POINT RD	C4-1-2	YANG WEI	CHEN WEI GANG	9 BREEZY POINT RD	ACTON	MA	01720
7 BREEZY POINT RD	C4-1-3	EICHEL BELINDA F		7 BREEZY POINT RD	ACTON	MA	01720
3 BREEZY POINT RD	C4-1-4	LIU XINBING	JIANG MIN	3 BREEZY POINT RD	ACTON	MA	01720
12 BREEZY POINT RD	C4-1-5	MANNING JOHN J	MANNING LORA L	12 BREEZY POINT ROAD	ACTON	MA	01720
✓8 BREEZY POINT RD	C4-12-5	SCHENA DAVID	LOESCHORN CAROL A	8 BREEZY POINT RD	ACTON	MA	01720
✓6 BREEZY POINT RD	C4-12-6	DESROSIER LAURIE TRUSTEE	DESROSIER THOMAS J TRUSTEE	LAURIE M DESROSIER 2006 R 6 BREEZY POINT RD	ACTON	MA	01720
339 NAGOG HILL RD	C4-14-1	TOWN OF CONCORD		WATER DEPARTMENT	CONCORD	MA	01742
✓484 GREAT RD	C4-15-	GOULD SHERRILL R TRUSTEE	486 REALTY TRUST	311 GREAT RD	LITTLETON	MA	01460-19
281 NAGOG HILL RD	C4-24-	CONANT PHOEBE M	C/O BREWSTER CONANT	151 NAGOG HILL RD	ACTON	MA	01720
✓13 HAZELNUT ST BEHIND	C4-32-	CONCORD TOWN OF		133 KEYES RD	CONCORD	MA	01742
✓257 NAGOG HILL RD	D4-1-3	TOWN OF ACTON		472 MAIN STREET	ACTON	MA	01720
468 GREAT RD	C4-21-5	PS468 LLC	C/O PS INC	468 GREAT RD	ACTON	MA	01720
499 ACORN PARK DR	C4-21-6	HARRIS MARIA B	SOUSOUNIS PETER J	499 ACORN PARK DR	ACTON	MA	01720
1 CHESTNUT ST	C4-21-15	SCITTARELLI VINCENT	SCITTARELLI KARYN M	1 CHESTNUT ST	ACTON	MA	01720
3 CHESTNUT ST	C4-21-16	WANG JIN YE	WANG HWANG-RUEY	3 CHESTNUT ST	ACTON	MA	01720
5 CHESTNUT ST	C4-21-17	EGGE RUSSEL R	EGGE JANE E	5 CHESTNUT STREET	ACTON	MA	01720
✓10 BREEZY POINT RD	C4-7-1	HUANG, YAOYAO	SUN, JIAN-RONG	10 BREEZY POINT ROAD	ACTON	MA	01720
✓354 GREAT RD	D4-4	QR PROPERTIES, LLC		32 SANDY PINE RD	TEMPLETON	MA	01468

Town of Acton
472 Main Street
Acton, MA 01720
Telephone (978) 929-6621
Fax (978) 264-9630

Brian McMullen
Assessor

Locus: 339 Nagog Hill Rd
Parcel ID: C4-14

Location	Parcel ID	Owner	Co-Owner	Mailing Address	City	State	Zip Code
7 CHESTNUT ST	C4-21-18	SOULIOTIS MARK A	SOULIOTIS EILEEN M	7 CHESTNUT ST	ACTON	MA	01720
16 CHESTNUT ST	C4-21-19	OAKE CHRIS A	OAKE PENNIE I	16 CHESTNUT ST	ACTON	MA	01720
14 CHESTNUT ST	C4-21-20	ZHAI MIN	HUANG YUHONG	14 CHESTNUT ST	ACTON	MA	01720
12 CHESTNUT ST	C4-21-21	HENRY JR GEORGE L	HENRY KATHIE A	12 CHESTNUT STREET	ACTON	MA	01720
10 CHESTNUT ST	C4-21-22	BANERJEE ANIRUDDHA	BANERJEE MANJUSHRI	10 CHESTNUT STREET	ACTON	MA	01720
8 CHESTNUT ST	C4-21-23	CHEN YIN NAN		8 CHESTNUT ST	ACTON	MA	01720
3 BEECHNUT ST	C4-21-24	RUSHKIN ILYA	LIN JIAN	3 BEECHNUT ST	ACTON	MA	01720
5 BEECHNUT ST	C4-21-25	BOLEN KEVIN R	BOLEN PAMELA S	5 BEECHNUT ST	ACTON	MA	01720
7 BEECHNUT ST	C4-21-26	COLLINS LAWRENCE T	COLLINS LINDA M	7 BEECHNUT ST	ACTON	MA	01720
9 BEECHNUT ST	C4-21-27	SCHNEIDER ROGER	SCHNEIDER CHRISTINA A	9 BEECHNUT ST	ACTON	MA	01720
6 BEECHNUT ST	C4-21-28	RAVIS JOHN G	RAVIS JERI L	6 BEECHNUT ST	ACTON	MA	01720
4 BEECHNUT ST	C4-21-29	FRIEDMAN G STODEL	SUAREZ STEPHANIE COX	4 BEECHNUT ST	ACTON	MA	01720
2 BEECHNUT ST	C4-21-30	LI HAILONG	YU LING	2 BEECHNUT ST	ACTON	MA	01720
1 HAZELNUT ST	C4-21-31	PETRAITIS MARTIN S	PETRAITIS DEBRA S	1 HAZELNUT ST	ACTON	MA	01720
3 HAZELNUT ST	C4-21-32	PATTERSON ALBERT J	PATTERSON MARY J	3 HAZELNUT ST	ACTON	MA	01720
5 HAZELNUT ST	C4-21-33	GU QI	XIE FANG	5 HAZELNUT ST	ACTON	MA	01720
7 HAZELNUT ST	C4-21-34	PURDOM GEOFFREY J	PURDOM DIANE K	7 HAZELNUT ST	ACTON	MA	01720
9 HAZELNUT ST	C4-21-35	CAI YAO YONG		9 HAZELNUT ST	ACTON	MA	01720
9 HAZELNUT ST	C4-21-35	CAI YAO YONG	ZHANG MIN	9 HAZELNUT ST	ACTON	MA	01720
11 HAZELNUT ST	C4-21-36	WONN DAVID M	WONN MARY ANNE	11 HAZELNUT ST	ACTON	MA	01720
8 HAZELNUT ST	C4-21-37	RICHARDS JOHN D	RICHARDS RUTH	8 HAZELNUT ST	ACTON	MA	01720
10 HAZELNUT ST	C4-21-38	CAO ZHU ALEXANDER	ZHU WENJING SUZANNE	10 HAZELNUT ST	ACTON	MA	01720
517 ACORN PARK DR	C4-21-39	HU LI-MING	WANG IDA Y	517 ACORN PARK DR	ACTON	MA	01720
515 ACORN PARK DR	C4-21-40	KRISHNAKUMAR NARAYANAN	SANKARANARAYANAN ARUNA	515 ACORN PARK DR	ACTON	MA	01720
2 HAZELNUT ST	C4-21-41	ONKEN MATTHEW T	HENLEY-ONKEN ERIKA L	2 HAZELNUT ST	ACTON	MA	01720
4 HAZELNUT ST	C4-21-42	TURNER KATHERINE J TRUSTEE	TURNER REALTY TRUST	4 HAZELNUT ST	ACTON	MA	01720
6 HAZELNUT ST	C4-21-43	FINDLEN ROBERT C	FINDLEN KIMBERLY F	6 HAZELNUT ST	ACTON	MA	01720
15 HAZELNUT ST	C4-21-44	OFORI MICHAEL V + PATRICIA A	LI WEI	15 HAZELNUT ST	ACTON	MA	01720
17 HAZELNUT ST	C4-21-45	LIU YANG	ZHONG YINGMY	17 HAZELNUT ST	ACTON	MA	01720
521 ACORN PARK DR	C4-21-46	KRISHNAN ANURADHA	KRISHNAN SUDHIR	521 ACORN PARK DR	ACTON	MA	01720

Town of Acton
472 Main Street
Acton, MA 01720
Telephone (978) 929-6621
Fax (978) 264-9630

Brian McMullen
Assessor

Locus: 339 Nagog Hill Rd
Parcel ID: C4-14

Location	Parcel ID	Owner	Co-Owner	Mailing Address	City	State	Zip Code
523 ACORN PARK DR	C4-21-47	SUNEEL KRISHNASWAMY	SUNEEL SOWMYA	523 ACORN PARK DR	ACTON	MA	01720
525 ACORN PARK DR	C4-21-48	LAPINSKI RONALD	LAPINSKI LISA B	525 ACORN PARK DR	ACTON	MA	01720
529 ACORN PARK DR	C4-21-49	JANI AJIT	JANI TRUPTI	529 ACORN PARK DR	ACTON	MA	01720
531 ACORN PARK DR	C4-21-50	HUANG ZHONG FEI		40 APPLE RIDGE RD	DANBURY	NJ	06810
531 ACORN PARK DR	C4-21-50	HUANG ZHONG FEI	SIU KI	531 ACORN PARK DR	ACTON	MA	01720
535 ACORN PARK DR	C4-21-51	VANGURI SHANTI		535 ACORN PARK DR	ACTON	MA	01720
537 ACORN PARK DR	C4-21-52	CHOI YUNHEE	LIM SUNGYUNG	537 ACORN PARK DR	ACTON	MA	01720
539 ACORN PARK DR	C4-21-53	PENTZ THERESA M		539 ACORN PARK DR	ACTON	MA	01720
527 ACORN PARK DR	C4-21-54	UTT JR JAMES WARREN	UTT CATHERINE GOUCHER	527 ACORN PARK DR	ACTON	MA	01720
520 ACORN PARK DR	C4-21-55	GROVES ERIC S	GROVES TRACY H	520 ACORN PARK DR	ACTON	MA	01720
518 ACORN PARK DR	C4-21-56	CREMMEN RICHARD M	CREMMEN SANDIE F	518 ACORN PARK DR	ACTON	MA	01720
516 ACORN PARK DR	C4-21-57	LAMB III THOMAS	LAMB SANDRA M	516 ACORN PARK DR	ACTON	MA	01720
544 ACORN PARK DR	C4-21-58	JONES JEAN B	CHEN JAMES	544 ACORN PARK DR	ACTON	MA	01720
546 ACORN PARK DR	C4-21-59	MCDONALD JOHN F	MCDONALD JENNIFER N	546 ACORN PARK DR	ACTON	MA	01720
548 ACORN PARK DR	C4-21-60	CROUCH JR TED R	CROUCH CAROL A	548 ACORN PARK DR	ACTON	MA	01720
550 ACORN PARK DR	C4-21-61	NITZKE JOHN B	NITZKE MARIE	550 ACORN PARK DR	ACTON	MA	01720
543 ACORN PARK DR	C4-21-62	DUKES THOMAS W	DUKES TAMARA D	543 ACORN PARK DR	ACTON	MA	01720
545 ACORN PARK DR	C4-21-63	ENGBER THOMAS M	ENGBER ROSE	545 ACORN PARK DR	ACTON	MA	01720
547 ACORN PARK DR	C4-21-64	VLAHAKIS PAMELA T	SCHMIDT JAMES F	547 ACORN PARK DR	ACTON	MA	01720
549 ACORN PARK DR	C4-21-65	FORD BRIAN P	FORD PAMELA B	549 ACORN PARK DR	ACTON	MA	01720
553 ACORN PARK DR	C4-21-66	FLAVIN JILL L		553 ACORN PARK DR	ACTON	MA	01720
557 ACORN PARK DR	C4-21-67	URSO FRANK A	SILVA JOANNE	557 ACORN PARK DR	ACTON	MA	01720
556 ACORN PARK DR	C4-21-68	MIDDLETON RICHARD E	CREMINS JEAN D	556 ACORN PARK DR	ACTON	MA	01720
554 ACORN PARK DR	C4-21-69	BHALCHANDRA VIKRAM	BHALCHANDRA SEEMA	554 ACORN PARK DR	ACTON	MA	01720
4 CHESTNUT ST	C4-21-70	HARDING MATTHEW W	HARDING ROBYN L	4 CHESTNUT ST	ACTON	MA	01720
6 CHESTNUT ST	C4-21-71	GRAZIANO GREGORY S	GRAZIANO MARY ELLEN	6 CHESTNUT ST	ACTON	MA	01720
510 ACORN PARK DR	C4-21-72	HURDLE ROBERT L	HURDLE CANDACE M	510 ACORN PARK DR	ACTON	MA	01720
506 ACORN PARK DR	C4-21-73	WOLF IRA D		506 ACORN PARK DR	ACTON	MA	01720
504 ACORN PARK DR	C4-21-74	LILLIE MICHAEL W	LILLIE KATE B	504 ACORN PARK DR	ACTON	MA	01720
1 WALNUT ST	C4-21-77	GU HONG	XIA LAN	1 WALNUT ST	ACTON	MA	01720

Town of Acton
472 Main Street
Acton, MA 01720
Telephone (978) 929-6621
Fax (978) 264-9630

Brian McMullen
Assessor

Locus: 339 Nagog Hill Rd
Parcel ID: C4-14

Location	Parcel ID	Owner	Co-Owner	Mailing Address	City	State	Zip Code
491 ACORN PARK DR	C4-21-78	NOTTONSON JEFFREY S	NOTTONSON MARY JANE	491 ACORN PARK DR	ACTON	MA	01720
3 WALNUT ST	C4-21-79	LI SHIPING	YONG MEI	3 WALNUT ST	ACTON	MA	01720
5 WALNUT ST	C4-21-80	CLYMER JEFF D	CLYMER KIMBERLEE T	5 WALNUT ST	ACTON	MA	01720
9 WALNUT ST	C4-21-81	WU YUCHUAN	WU JUN	9 WALNUT ST	ACTON	MA	01720
11 WALNUT ST	C4-21-82	LIU YIMAO	SHAO YULIN	11 WALNUT ST	ACTON	MA	01720
18 WALNUT ST	C4-21-83	CHITTURU RAMAKRISHNA RAO	PUTTASWAMACHAR REVATHI	18 WALNUT ST	ACTON	MA	01720
16 WALNUT ST	C4-21-84	AIN ANTHONY		16 WALNUT ST	ACTON	MA	01720
14 WALNUT ST	C4-21-85	AUFIERO JEFFREY F	AUFIERO JENNIFER M	14 WALNUT ST	ACTON	MA	01720
12 WALNUT ST	C4-21-86	LIONETTA MARK S	LIONETTA CELIA J	12 WALNUT ST	ACTON	MA	01720
10 WALNUT ST	C4-21-87	CHAWLA RAJEEV		10 WALNUT ST	ACTON	MA	01720
8 WALNUT ST	C4-21-88	HAUFLER GLENN J	HAUFLER CHRISTINA	8 WALNUT ST	ACTON	MA	01720
4 WALNUT ST	C4-21-89	UPHAM JOHN H	UPHAM AMY Y	4 WALNUT ST	ACTON	MA	01720
6 WALNUT ST	C4-21-90	DAI LIYI	WANG HELEN YUN	6 WALNUT ST	ACTON	MA	01720
2 WALNUT ST	C4-21-91	PINES ZACHARY J		495 ACORN PARK DR	ACTON	MA	01720
497 ACORN PARK DR	C4-21-92	WALKER ANDREW J	WALKER BEGONA	497 ACORN PARK DR	ACTON	MA	01720
4 PALMER LN	C4-27-5	POULTON JEFFREY V	POULTON ELIZABETH J	4 PALMER LN	ACTON	MA	01720
6 PALMER LN	C4-27-6	REICHERT DEBORAH L	ACORN PARK REALTY TRUST	6 PALMER LN	ACTON	MA	01720
6 PALMER LN	C4-27-6	REICHERT DEBORAH L		6 PALMER LN	ACTON	MA	01720
3 PALMER LN	C4-27-7	BURROUGHS SCOTT M + MARY LOU	BAKER KATHLEEN	3 PALMER LN	ACTON	MA	01720
5 PALMER LN	C4-27-8	RUSSELL JAMES R	RUSSELL SUSAN B	5 PALMER LN	ACTON	MA	01720
8 PALMER LN	C4-27-9	GORE JEFFREY K		8 PALMER LN	ACTON	MA	01720
8 PALMER LN	C4-27-9	GORE JEFFREY K		8 PALMER LN	ACTON	MA	01720
8 PALMER LN	C4-27-9	GORE JEFFREY K	GORE VALERIE L BAUER	8 PALMER LN	ACTON	MA	01720
116 WATERSIDE CLR	B4-101-34	SMITH LINDA G	OSGERBY IAN THOMAS	116 WATERSIDE CLR	ACTON	MA	01720
115 WATERSIDE CLR	B4-101-35	REICHERT JAMES H TRUSTEE	BARBARA JANE REICHERT IRREVOCA	115 WATERSIDE CLR	ACTON	MA	01718
114 WATERSIDE CLR	B4-101-36	WEINSTEIN BERNARD ETUX		114 WATERSIDE CL	ACTON	MA	01718
113 WATERSIDE CLR	B4-101-37	ROSNER PETER		113 WATERSIDE CLRG	ACTON	MA	01718
112 WATERSIDE CLR	B4-101-38	GEORGE SUSAN M		112 WATERSIDE CLR	ACTON	MA	01718
111 WATERSIDE CLR	B4-101-39	JUBERT INA	BELACK CARL NELSON	111 WATERSIDE CLR	ACTON	MA	01720
110 WATERSIDE CLR	B4-101-40	CHEN JIANRONG		110 WATERSIDE CLR	ACTON	MA	01720

Town of Acton
472 Main Street
Acton, MA 01720
Telephone (978) 929-6621
Fax (978) 264-9630

Brian McMullen
Assessor

Locus: 339 Nagog Hill Rd
Parcel ID: C4-14

Location	Parcel ID	Owner	Co-Owner	Mailing Address	City	State	Zip Code
125 WATERSIDE CLR	B4-102-41	GABER BORIS		125 WATERSIDE CLR	ACTON	MA	01718
124 WATERSIDE CLR	B4-102-42	CROWELL DARRIN A		124 WATERSIDE CLR	ACTON	MA	01720
123 WATERSIDE CLR	B4-102-43	LIU JIAN WEI	FANG QIN	123 WATERSIDE CLR	ACTON	MA	01718
122 WATERSIDE CLR	B4-102-44	BOUKHGALTER BORIS E	BANSHCHIKOVA IRINA	122 WATERSIDE CIR	ACTON	MA	01718
121 WATERSIDE CLR	B4-102-45	LYTTLE JUDITH E		121 WATERSIDE CLRG	ACTON	MA	01718
120 WATERSIDE CLR	B4-102-46	WATRISS JAMES G	C/O FREDERIC WATRISS	60 WILLIAMS RD	CONCORD	MA	01742
130 BUTTERNUT HOLLOW	B4-103-1	YE BAOQING		130 BUTTERNUT HOLLOW	ACTON	MA	01718
131 BUTTERNUT HOLLOW	B4-103-2	BLOMGREN SHARON		131 BUTTERNUT HOLLOW	ACTON	MA	01718
132 BUTTERNUT HOLLOW	B4-103-3	MILLER NIELA		132 BUTTERNUT HOLLOW	ACTON	MA	01718
133 BUTTERNUT HOLLOW	B4-103-4	LEE TAESIK	ALICE H OH	133 BUTTERNUT HOLLOW	ACTON	MA	01718
134 BUTTERNUT HOLLOW	B4-103-5	VALENTE ELIZABETH M		134 BUTTERNUT HOLLOW	ACTON	MA	01718
135 BUTTERNUT HOLLOW	B4-103-6	HAN ZHIXIU		135 BUTTERNUT HOLLOW	ACTON	MA	01718
140 BUTTERNUT HOLLOW	B4-104-7	CHAKRAVARTHY RAJESH		8 ABEL JONES PL	ACTON	MA	01718
141 BUTTERNUT HOLLOW	B4-104-8	REIFENSTEIN EDWARD C		141 BUTTERNUT HOLLOW	ACTON	MA	01718
142 BUTTERNUT HOLLOW	B4-104-9	MERRICK MARION A		16 THOREAU ROAD	ACTON	MA	01720
143 BUTTERNUT HOLLOW	B4-104-10	HOCHBERG YIGAL		143 BUTTERNUT HOLLOW	ACTON	MA	01720
144 BUTTERNUT HOLLOW	B4-104-11	STOKES THERESA E TRUSTEE	OLD STONEBROOK NOMINEE TRUST	131 SUDBURY RD	CONCORD	MA	01742
145 BUTTERNUT HOLLOW	B4-104-12	HAND BARRY J	HAND STEPHANIE W	145 BUTTERNUT HL	ACTON	MA	01718
146 BUTTERNUT HOLLOW	B4-104-13	OLIVA RICHARD F		146 BUTTERNUT HOLLOW	ACTON	MA	01718
147 BUTTERNUT HOLLOW	B4-104-14	DUDLEY PATRICIA J		147 BUTTERNUT HOL.	ACTON	MA	01718
150 BUTTERNUT HOLLOW	B4-105-15	HOLMANSKY EVGENY N	HOLMANSKY ELENA M	150 BUTTERNUT HL	ACTON	MA	01718
151 BUTTERNUT HOLLOW	B4-105-16	HALLIGAN TIMOTHY DR		14560 LATROBE DR	COLORADO S	CO	38921
152 BUTTERNUT HOLLOW	B4-105-17	MARKMAN DMITRY		152 BUTTERNUT HOLLOW	ACTON	MA	01718
153 BUTTERNUT HOLLOW	B4-105-18	BEUST BEVERLY A		153 BUTTERNUT HOLLOW	ACTON	MA	01718
154 BUTTERNUT HOLLOW	B4-105-19	WALKER BURKE M	WALKER PATRICE K	154 BUTTERNUT HOLLOW	ACTON	MA	01720
165 SPLIT ROCK DR	B4-106-20	GORDON GEORGE E	GORDON AMY S	165 SPLIT ROCK DR	ACTON	MA	01718
164 SPLIT ROCK DR	B4-106-21	DAVIS BETH S		164 SPLIT ROCK DR	ACTON	MA	01718
163 SPLIT ROCK DR	B4-106-22	LANDRETH KAY MARILYNN TRUSTEE	KML REALTY TRUST	163 SPLIT ROCK DR	ACTON	MA	01718
162 SPLIT ROCK DR	B4-106-23	MALLARD BARBARA E		162 SPLIT ROCK DR	ACTON	MA	01718
160 SPLIT ROCK DR	B4-106-24	REINHARDT MICHAEL R	REINHARDT ELIZABETH S	160 SPLIT ROCK DR	ACTON	MA	01718

Town of Acton
472 Main Street
Acton, MA 01720
Telephone (978) 929-6621
Fax (978) 264-9630

Brian McMullen
Assessor

Locus: 339 Nagog Hill Rd
Parcel ID: C4-14

Location	Parcel ID	Owner	Co-Owner	Mailing Address	City	State	Zip Code
161 SPLIT ROCK DR	B4-106-25	ONUSKA LINDA A		161 SPLIT ROCK DR.	ACTON	MA	01718
170 SPLIT ROCK DR	B4-107-26	ZHANG XIN	YE XIANYI	170 SPLIT ROCK DR	ACTON	MA	01718
171 SPLIT ROCK DR	B4-107-27	BRIGHT WILLIAM JR	BRIGHT ANN M	171 SPLIT ROCK DR	ACTON	MA	01718
172 SPLIT ROCK DR	B4-107-28	GOBLICK CAROLYN R		172 SPLIT ROCK DRIVE	ACTON	MA	01718
173 SPLIT ROCK DR	B4-107-29	LOMBARDO RICHARD V	LOMBARDO CAROLYN J	173 SPLIT ROCK DR.	ACTON	MA	01718
174 SPLIT ROCK DR	B4-107-30	BERGER SUSAN T		174 SPLIT ROCK DR	ACTON	MA	01718
175 SPLIT ROCK DR	B4-107-31	JUELS PHILIP I	JUELS KERRIE A	19 WHITETAIL WAY	LITTLETON	MA	01460
176 SPLIT ROCK DR	B4-107-32	LAI CHANNING J		176 SPLIT ROCK DR	ACTON	MA	01718
177 SPLIT ROCK DR	B4-107-33	HERBST DIANE	TRUSTEE OF THE DIANE L HERBST	177 SPLIT ROCK DR	ACTON	MA	01720
616 OLD STONEBROOK	B4-108-47	COAN ROBERT M	FRACASSO GRACE M	616 OLD STONEBROOK	ACTON	MA	01718
615 OLD STONEBROOK	B4-108-48	RHEAUME MICHAEL J		615 OLD STONEBROOK	ACTON	MA	01718
614 OLD STONEBROOK	B4-108-49	FRESHMAN ELLEN J		614 OLD STONEBROOK	ACTON	MA	01720
613 OLD STONEBROOK	B4-108-50	ROSEN ANDREW J		613 OLD STONEBROOK	ACTON	MA	01718
612 OLD STONEBROOK	B4-108-51	WESTER THOMAS R	DOLAN KAITLIN	612 OLD STONEBROOK	ACTON	MA	01720
611 OLD STONEBROOK	B4-108-52	LAFOLLETTE PHILIP A	GEER MARY ELLEN	611 OLD STONEBROOK	ACTON	MA	01718
667 PHEASANT HILL	B4-109-53	WOLF DAVID	WOLF JENNIFER	667 PHEASANT HILL	ACTON	MA	01720
665 PHEASANT HILL	B4-109-54	BLOOM STEVEN B	BLOOM TINA Y	665 PHEASANT HILL	ACTON	MA	01718
668 PHEASANT HILL	B4-109-55	TANG JINJIE		668 PHEASANT HILL	ACTON	MA	01720
663 PHEASANT HILL	B4-109-56	MORRISON PRISCILLA A	RODRIGUEZ DEANNA	663 PHEASANT HILL	ACTON	MA	01718
664 PHEASANT HILL	B4-109-57	CHEUNG ROBIN		664 PHEASANT HILL	ACTON	MA	01718
662 PHEASANT HILL	B4-109-58	PHILLIPS NATHAN D		229 FULLER STREET	NEWTON	MA	02465
661 PHEASANT HILL	B4-109-59	TANG PING	ZHOU HAIYAN	661 PHEASANT HILL	ACTON	MA	01720
648 PHEASANT HILL	B4-110-60	CROMPTON ELLEN M		648 PHEASANT HILL	ACTON	MA	01718
647 PHEASANT HILL	B4-110-61	KONG NING	WANG DONGMEI	647 PHEASANT HILL	ACTON	MA	01720
646 PHEASANT HILL	B4-110-62	MINTZ LEON	MINTZ RITA	646 PHEASANT HILL	ACTON	MA	01718
645 PHEASANT HILL	B4-110-63	ABRAMSON ROBERT J	ABRAMSON CLAUDIA G	645 PHEASANT HILL	ACTON	MA	01720
644 PHEASANT HILL	B4-110-64	BRZOSKOWSKI RYSZARD	BRZOSKOWSKI MARIA J	644 PHEASANT HILL	ACTON	MA	01718
643 PHEASANT HILL	B4-110-65	ANGELL WILLIAM H	ANGELL DEANNE G	44 PRISCILLA MULLENS WY	CARVER	MA	02330
642 PHEASANT HILL	B4-110-66	FROLICK JAY H	FROLICK ROSALIE S	642 PHEASANT HILL	ACTON	MA	01718
641 PHEASANT HILL	B4-110-67	KOEHLER CHARLES	KOEHLER KAREN L	641 PHEASANT HILL	ACTON	MA	01718

Town of Acton
472 Main Street
Acton, MA 01720
Telephone (978) 929-6621
Fax (978) 264-9630

Brian McMullen
Assessor

Locus: 339 Nagog Hill Rd
Parcel ID: C4-14

Location	Parcel ID	Owner	Co-Owner	Mailing Address	City	State	Zip Code
625 PHEASANT HILL	B4-111-68	GRIESENBECK DONNA K	EDWARDS CHRISTOPHER G	625 PHEASANT HILL	ACTON	MA	01718
624 PHEASANT HILL	B4-111-69	DOWDY DARLENE M		624 PHEASANT HILL	ACTON	MA	01718
623 PHEASANT HILL	B4-111-70	COTE TIMOTHY E	KATZ-COTE HEATHER M	623 PHEASANT HILL	ACTON	MA	01720
622 PHEASANT HILL	B4-111-71	MOSS CAROLINE		622 PHEASANT HILL	ACTON	MA	01718
621 PHEASANT HILL	B4-111-72	BOGAEVSKY DIMITRY	BOGAEVSKY TATYANA	621 PHEASANT HILL	ACTON	MA	01720
607 OLD STONEBROOK	B4-112-73	WATKINS MICHAEL D	WATKINS KAREN J (TALLARIDA)	607 OLD STONEBROOK	ACTON	MA	01720
605 PHEASANT HILL	B4-112-74	SOLON MARGARET D		605 PHEASANT HILL	ACTON	MA	01718
606 OLD STONEBROOK	B4-112-75	MISHRA KAVEESH		606 OLD STONEBROOK	ACTON	MA	01718
604 OLD STONEBROOK	B4-112-76	ZISCH WALDEMAR C		102 KRISTEN DRIVE EXTENSI	CHELMSFORI	MA	01824
603 OLD STONEBROOK	B4-112-77	LIU JING	ZHENG GULIAN	603 OLD STONEBROOK	ACTON	MA	01720
602 OLD STONEBROOK	B4-112-78	QUIST YVONNE	QUIST THEODORE ET AL	602 OLD STONEBROOK	ACTON	MA	01718
601 OLD STONEBROOK	B4-112-79	BENOWITZ MARTIN	PATRICIA	601 OLD STONEBROOK	ACTON	MA	01718
541 OLD STONEBROOK	B4-114-80	SCHILLING DONNA E		541 OLD STONEBROOK	ACTON	MA	01718
542 OLD STONEBROOK	B4-114-81	SIOTIA SANJEEV		83 DEERFOOT RD	SOUTHBORO	MA	01772
543 OLD STONEBROOK	B4-114-82	DESMOND ROBERT J	LORRAINE M	BOX 1593	NO FALMOUT	MA	02556
544 GREAT ELM WY	B4-114-83	LALL SANJAY KUMAR	TYAGI MANISHA S	544 GREAT ELM WY	ACTON	MA	01720
545 GREAT ELM WY	B4-114-84	LUCY DORN		545 GREAT ELM WY	ACTON	MA	01720
546 GREAT ELM WY	B4-114-85	TIMLEGE CHARLOTTE H	TIMLEGE EDWARD C	546 GREAT ELM WAY	ACTON	MA	01718
547 GREAT ELM WY	B4-114-86	AMSTUTZ GALEN D	AMSTUTZ MARY E	547 GREAT ELM WY	ACTON	MA	01718
548 GREAT ELM WY	B4-114-87	FARIA FRANCISCO I	ANA C	548 GREAT ELM WAY	ACTON	MA	01718
549 GREAT ELM WY	B4-114-88	SHEN JANIE	SUAREZ XAVIER VELASCO	549 GREAT ELM WY	ACTON	MA	01718
539 OLD STONEBROOK	B4-115-89	TAROLA DANIEL P	TAROLA FAINA V	539 OLD STONEBROOK	ACTON	MA	01720
538 OLD STONEBROOK	B4-115-90	VAN MOURIK MARY DM		538 OLD STONEBROOK	ACTON	MA	01718
537 OLD STONEBROOK	B4-115-91	KLEIN DANIEL S	SHELLEY KASSMAN	537 OLD STONEBROOK	ACTON	MA	01718
536 OLD STONEBROOK	B4-115-92	ZHURAVLEV PAVEL	ZHURAVLOVA IRYNA	536 OLD STONEBROOK	ACTON	MA	01720
535 OLD STONEBROOK	B4-115-93	KUBIK GERALD H	KUBIK KAREN E	535 OLD STONEBROOK	ACTON	MA	01718
534 OLD STONEBROOK	B4-115-94	ADELMAN EDWARD H	ADELMAN MICHELE	534 OLD STONEBROOK	ACTON	MA	01718
533 OLD STONEBROOK	B4-115-95	MUTEN BENGT		533 OLD STONEBROOK	ACTON	MA	01720
532 OLD STONEBROOK	B4-115-96	JOSEPH ALENCHERY LIZA		532 OLD STONEBROOK	ACTON	MA	01720
531 OLD STONEBROOK	B4-115-97	LOPES SALVATORE T		531 OLD STONEBROOK	ACTON	MA	01718

Town of Acton
472 Main Street
Acton, MA 01720
Telephone (978) 929-6621
Fax (978) 264-9630

Brian McMullen
Assessor

Locus: 339 Nagog Hill Rd
Parcel ID: C4-14

Location	Parcel ID	Owner	Co-Owner	Mailing Address	City	State	Zip Code
518 TUMBLING HAWK	B4-116-99	SANCETTA SCOTT R	TATTELMAN SHERYL	518 TUMBLING HAWK	ACTON	MA	01718
517 TUMBLING HAWK	B4-116-100	KINNIBURGH DAVID		517 TUMBLING HAWK	ACTON	MA	01718
516 TUMBLING HAWK	B4-116-101	GILFIX DAVID J	GILFIX SHARYN B	516 TUMBLING HAWK	ACTON	MA	01718
515 TUMBLING HAWK	B4-116-102	SUN JIANHUA	QUI SHUMEL	515 TUMBLING HAWK	ACTON	MA	01718
514 TUMBLING HAWK	B4-116-103	KVASOV ALEXEI G	TERENTYEVA OLGA Y	514 TUMBLING HAWK	ACTON	MA	01720
513 TUMBLING HAWK	B4-116-104	TAMARCHENKO JOSEPH	TAMARCHENKO INNA	513 TUMBLING HAWK	ACTON	MA	01718
512 TUMBLING HAWK	B4-116-105	RONG BING LAN		512 TUMBLING HAWK	ACTON	MA	01718
511 TUMBLING HAWK	B4-116-106	CROSS JASON B	CROSS PIERA M.	511 TUMBLING HAWK	ACTON	MA	01720
577 GREAT ELM WY	B4-117-107	HARDING MARK E	HARDING SUZANNE J	577 GREAT ELM WY	ACTON	MA	01718
576 GREAT ELM WY	B4-117-108	LEVIN ISAAC	LEVIN NATASHA	576 GREAT ELM WY	ACTON	MA	01718
575 GREAT ELM WY	B4-117-109	BEAN BARBARA A		575 GREAT ELM WY	ACTON	MA	01720
574 GREAT ELM WY	B4-117-110	CHUNG JEESEONG		96 BOWER TR	IRVINE	CA	92503
573 GREAT ELM WY	B4-117-111	IAFRATE ANNETTE		573 GREAT ELM WAY	ACTON	MA	01718
572 GREAT ELM WY	B4-117-112	FOELLER CARL W JR		572 GREAT ELM WY	ACTON	MA	01718
571 GREAT ELM WY	B4-117-113	SHAH MAHULKUMAR	SHAH RUPA	25925 SPRING FARM CIRCLE	CHANTILLY	VA	20152
558 GREAT ELM WY	B4-118-114	TALEBI KAMRAN		558 GREAT ELM WY	ACTON	MA	01720
559 GREAT ELM WY	B4-118-115	DANIELLO SARAH D		559 GREAT ELM WY	ACTON	MA	01718
551 GREAT ELM WY	B4-118-116	GUPTA BEENU	GUPTA SANJAY	551 GREAT ELM WY	ACTON	MA	01720
552 GREAT ELM WY	B4-118-117	ZELTSER DIANA	LI ZHIMIN	552 GREAT ELM WY	ACTON	MA	01720
553 GREAT ELM WY	B4-118-118	WHITE BILLY M	PATRICIA P	3365 HAZELWOOD DR	ATLANTA	GA	30311
554 GREAT ELM WY	B4-118-119	YACOUBY RAY S	YACOUBY BARBARA S	554 GREAT ELM WY	ACTON	MA	01718
555 GREAT ELM WY	B4-118-120	FITZPATRICK ALICE F TRUSTEE	ALICE F FITZPATRICK REV TRUST	555 GREAT ELM WY	ACTON	MA	01718
556 GREAT ELM WY	B4-118-121	RUTMAN GRIGORY	RUTMAN IRINA	556 GREAT ELM WY	ACTON	MA	01720
557 GREAT ELM WY	B4-118-122	NAUTIYAL ATUL		557 GREAT ELM WY	ACTON	MA	01718
598 GREAT ELM WY	B4-119-123	GRIFFIN THOMAS W + CATHY LAVOI		598 GREAT ELM WY	ACTON	MA	01720
599 GREAT ELM WY	B4-119-124	FINN NOREEN D		599 GREAT ELM WY	ACTON	MA	01718
594 PINE CONE STRAND	B4-119-125	QUINN JOHN W ET AL	ABRAHAM ROBERT W+KRISTEN J	81 PLAINFIELD RD	CONCORD	MA	01742
593 PINE CONE STRAND	B4-119-126	DEOLIVEIRA GESIEL G	D OLIVEIRA WALMIRA	593 PINE CONE STRAND	ACTON	MA	01718
592 PINE CONE STRAND	B4-119-127	SATHAYE YASHODHAN	JAMBHEKAR KSHAMA	592 PINE CONE STRAND	ACTON	MA	01718
591 PINE CONE STRAND	B4-119-128	BENDER II C ROBERT		591 PINE CONE STRAND	ACTON	MA	01718

Town of Acton
472 Main Street
Acton, MA 01720
Telephone (978) 929-6621
Fax (978) 264-9630

Brian McMullen
Assessor

Locus: 339 Nagog Hill Rd
Parcel ID: C4-14

Location	Parcel ID	Owner	Co-Owner	Mailing Address	City	State	Zip Code
590 PINE CONE STRAND	B4-119-129	ARYASOMAYAJULA SUBRAHMANYAM	NOOKALA SRIDEVI	590 PINE CONE STRAND	ACTON	MA	01720
595 GREAT ELM WY	B4-119-130	VILLEGAS DIANA L		595 GREAT ELM WAY	ACTON	MA	01718
596 GREAT ELM WY	B4-119-131	HORTON RICHARD J	LIU SHITAO	8 CONCETTA CIRCLE	ACTON	MA	01718
597 GREAT ELM WY	B4-119-132	ZEMLYANSKY NATALY		19 TUFFS RD	LEXINGTON	MA	02421
522 TUMBLING HAWK	B4-120-133	CAOUETTE FRANCES S		522 TUMBLING HAWK	ACTON	MA	01718
523 TUMBLING HAWK	B4-120-134	DUFOUR JEAN-LUC	LETENDRE SANDRINE	409 FOX DEN LANE	MILLERSVILLE	MD	21108
524 TUMBLING HAWK	B4-120-135	BAGLIO JO AN &	CHARLES F	524 TUMBLING HAWK	ACTON	MA	01718
525 TUMBLING HAWK	B4-120-136	OCONNOR CHRISTOPHER M	OCONNOR LISA M	525 TUMBLING HAWK	ACTON	MA	01720
526 TUMBLING HAWK	B4-120-137	KRISHNASWAMY SUNEEL	SUNEEL SOWMYA	523 ACORN PARK DR	ACTON	MA	01720
520 BANKSIDE HOLLOW	B4-120-138	AN HONG	ZHANG XIANGWEI	520 BANKSIDE HOLLOW	ACTON	MA	01718
521 BANKSIDE HOLLOW	B4-120-139	ZHANG YONG	LI WEN	521 BANKSIDE HOLLOW	ACTON	MA	01718
527 BANKSIDE HOLLOW	B4-120-140	BIGGS JOYCE C		527 BANKSIDE HOLLOW	ACTON	MA	01718
528 GREAT ELM WY	B4-120-141	SANDBERG JENNIE S		528 GREAT ELM WY	ACTON	MA	01718
529 GREAT ELM WY	B4-120-142	MA HEEKYEONG	LEE SUKWOO	529 GREAT ELM WY	ACTON	MA	01720
504 TUMBLING HAWK	B4-121-143	LEVIN OLEG	CHICHEVA TATYANA	504 TUMBLING HAWK	ACTON	MA	01720
505 TUMBLING HAWK	B4-121-144	RAO MITNALA R	RAO MITINALA PRAMILA	505 TUMBLING HAWK	ACTON	MA	01720
501 TUMBLING HAWK	B4-121-145	ABRAMS IRWIN B & GER		501 TUMBLING HAWK	ACTON	MA	01718
502 TUMBLING HAWK	B4-121-146	HU YONGHAN	CAI SUWEN	502 TUMBLING HAWK	ACTON	MA	01720
503 TUMBLING HAWK	B4-121-147	COONEY WILLIAM J III TRUSTEE	POWER DEBORAH A TRUSTEE	POCO ACTON REALTY TRUST 959 CONCORD ROAD	CARLISLE	MA	01741
506 BANKSIDE HOLLOW	B4-121-148	KAPLAN-EARLE JOHN	KAPLAN-EARLE MARNI	506 BANKSIDE HOLLOW	ACTON	MA	01720
507 BANKSIDE HOLLOW	B4-121-149	ONEIL ELIZABETH , COUGHLIN CAR	COUGHLIN CHRISTOPER, COUGHLIN	507 BANKSIDE HOLLOW	ACTON	MA	01718
248 PINE CONE STRAND	B4-122-150	OLIVEIRA CLEBER M		248 PINE CONE STRAND	ACTON	MA	01720
249 PINE CONE STRAND	B4-122-151	GILBERT A BETHEL		249 PINE CONE STRND	ACTON	MA	01718
240 OLD BEAVERBROOK	B4-122-152	ORMSBY SHIRLEY A		240 OLD BEAVERBROOK	ACTON	MA	01718
241 OLD BEAVERBROOK	B4-122-153	SUMMERFELT ELGIN H		241 OLD BEAVERBROOK	ACTON	MA	01720
242 OLD BEAVERBROOK	B4-122-154	FLEMING H MARGO		242 OLD BEAVERBROOK ROAD	ACTON	MA	01718
243 PINE CONE STRAND	B4-122-155	LANDERS JOHN L		243 PINE CONE STRAND	ACTON	MA	01718
244 OLD BEAVERBROOK	B4-122-156	YERSHOV ALEXANDER	YERSHOV IRINA	244 OLD BEAVERBROOK ROAD	ACTON	MA	01718
245 PINE CONE STRAND	B4-122-157	SWEENEY MICHAEL G		245 PINE CONE STRAND	ACTON	MA	01718

Town of Acton
472 Main Street
Acton, MA 01720
Telephone (978) 929-6621
Fax (978) 264-9630

Brian McMullen
Assessor

Locus: 339 Nagog Hill Rd
Parcel ID: C4-14

Location	Parcel ID	Owner	Co-Owner	Mailing Address	City	State	Zip Code
246 PINE CONE STRAND	B4-122-158	YEE JANICE		246 PINE CONE STRAND	ACTON	MA	01718
247 PINE CONE STRAND	B4-122-159	TOMPKINS DAVID O & V		247 PINE CONE STRND	ACTON	MA	01718
236 BROWN BEAR CRSG	B4-123-165	PATHAK SANDEEP M	PATHAK SMITA S	236 BROWN BEAR CRSG	ACTON	MA	01718
235 BROWN BEAR CRSG	B4-123-166	HALL CHARLES W	HALL MONICA L	235 BROWN BEAR CRSG	ACTON	MA	01718
234 BROWN BEAR CRSG	B4-123-167	YUAN WEI	WANG CHEN	11 FLAMINGO CIR	SHREWSBUR	MA	01545
233 OLD BEAVERBROOK	B4-123-168	PASSMAN SHIRLEY L	FURNACE PAMELA MAE	233 OLD BEAVERBROOK	ACTON	MA	01718
232 OLD BEAVERBROOK	B4-123-169	RAFUSE PAUL E	MARY ANN	20 JACKSON DR	ACTON	MA	01720
226 BANKSIDE HOLLOW	B4-124-170	FALCONE ANGELO	FALCONE RHONDA W	226 BANKSIDE HOLLOW	ACTON	MA	01720
225 BANKSIDE HOLLOW	B4-124-171	SAVEL NANCY E		225 BANKSIDE HOLLOW	ACTON	MA	01718
220 OLD BEAVERBROOK	B4-124-172	BROWN ARTHUR	LI GUANGYI	220 OLD BEAVERBROOK	ACTON	MA	01720
221 OLD BEAVERBROOK	B4-124-173	SHETTY JAYRAM T	SHETTY SHASHI	221 OLD BEAVERBROOK	ACTON	MA	01720
222 OLD BEAVERBROOK	B4-124-174	THANDAPANI SRINIVASAN	SRINIVASAN REVATHY	222 OLD BEAVERBROOK	ACTON	MA	01720
223 OLD BEAVERBROOK	B4-124-175	BECKMAN I WARREN		223 OLD BEAVERBROOK	ACTON	MA	01718
224 OLD BEAVERBROOK	B4-124-176	COATES TABOR W		224 OLD BEAVERBROOK	ACTON	MA	01718
229 BANKSIDE HOLLOW	B4-124-177	SASSON MIGUEL	DE FIGUEIREDO FERNANDA L	229 BANKSIDE HOLLOW	ACTON	MA	01718
228 BANKSIDE HOLLOW	B4-124-178	HODENPEL HUMPHREY J	HODENPEL SYLVIA Y	228 BANKSIDE HOLLOW	ACTON	MA	01718
227 BANKSIDE HOLLOW	B4-124-179	ANANTHANARANYANAN BHUVAN	BHUVAN PREETI R	227 BANKSIDE HOLLOW	ACTON	MA	01718
210 MEADOWS EDGE	B4-125-180	SHAKIR HASHIM		210 MEADOWS EDGE	ACTON	MA	01720
211 MEADOWS EDGE	B4-125-181	TAYLOR PETER B		211 MEADOWS EDGE	ACTON	MA	01718
212 MEADOWS EDGE	B4-125-182	WILSON DAVID A		212 MEADOWS EDGE	ACTON	MA	01720
213 MEADOWS EDGE	B4-125-183	WILSON JOHN E JR		213 MEADOWS EDGE	ACTON	MA	01718
214 MEADOWS EDGE	B4-125-184	PINCUMBE DAVID L	SHIELDS PAMELA J	214 MEADOWS EDGE	ACTON	MA	01718
215 MEADOWS EDGE	B4-125-185	PRASAD ARUN	HEDGE SHILPA	215 MEADOWS EDGE	ACTON	MA	01718
216 MEADOWS EDGE	B4-125-186	YANG LIWEN		216 MEADOWS EDGE	ACTON	MA	01720
217 MEADOWS EDGE	B4-125-187	HUA WEI	LI BEI	217 MEADOWS EDGE	ACTON	MA	01718
257 BROWN BEAR CRSG	B4-126-188	DAY MARTHA P		257 BROWN BEAR CRSG	ACTON	MA	01720
256 BROWN BEAR CRSG	B4-126-189	COLLINS PATRICIA A	BURKE ROBERT	256 BROWN BEAR CRSG	ACTON	MA	01720
255 BROWN BEAR CRSG	B4-126-190	CARO KATHY L	HALL MONICA L	255 BROWN BEAR CRSG	ACTON	MA	01720
254 BROWN BEAR CRSG	B4-126-191	VIITA MARIE E	C/O MARIE ELIZABETH GLYNN	413 VANDERVOORT AVE	BROOKLYN	NY	11222
253 BROWN BEAR CRSG	B4-126-192	RODGERS RICHARD M		253 BROWN BEAR CRSG	ACTON	MA	01718

472 Main Street
Acton, MA 01720
Telephone (978) 929-6621
Fax (978) 264-9630

Brian McMullen
Assessor

Locus: 339 Nagog Hill Rd
Parcel ID: C4-14

Location	Parcel ID	Owner	Co-Owner	Mailing Address	City	State	Zip Code
252 BROWN BEAR CRSG	B4-126-193	ADELMAN HOWARD E	ADELMAN KARIN	90 BAY ST	KINSTON	ON	K7K1H
251 BROWN BEAR CRSG	B4-126-194	MOUDGAL YOGANAND	SETLUN RAJASHREE	251 BROWN BEAR CRSG	ACTON	MA	01718
261 BROWN BEAR CRSG	B4-126-261	MAY ALBERT C	MAY BRENDA M	261 BROWN BEAR CRSG	ACTON	MA	01720
262 BROWN BEAR CRSG	B4-126-262	LIU HONGBING	REN YI	262 BROWN BEAR CRSG	ACTON	MA	01718
263 BROWN BEAR CRSG	B4-126-263	DERGACHEV ALEKSEI Y	POLIAKOVA INNA V	263 BROWN BEAR CRSG	ACTON	MA	01718
264 BROWN BEAR CRSG	B4-126-264	HSIUNG PAUL	HSIUNG JOAN L	40 RAINBOW RIDGE RD	POMONA	CA	91766
265 BROWN BEAR CRSG	B4-126-265	ROUGHSEDGE JOHN C	ROUGHSEDGE CHARRON A	265 BROWN BEAR CRSG	ACTON	MA	01718
266 BROWN BEAR CRSG	B4-126-266	LELIEVRE MARGARET A TRUSTEE	MARGARET A LELIEVRE REVOCABLE	266 BROWN BEAR CRSG	ACTON	MA	01720
201 MEADOWS EDGE	B4-127-195	WEST STEPHEN D	CATHERINE J CHASE	201 MEADOWS EDGE	ACTON	MA	01718
202 MEADOWS EDGE	B4-127-196	GREBERT KIMBERLY		202 MEADOWS EDGE	ACTON	MA	01720
203 MEADOWS EDGE	B4-127-197	JOHNSON DAVID C		203 MEADOWS EDGE	ACTON	MA	01718
204 MEADOWS EDGE	B4-127-198	MUIR RUTH PETTEYS, TR	C/O KEELER BARBARA	33 QUABOAG RD	ACTON	MA	01720
205 MEADOWS EDGE	B4-127-199	MASSUDA SERGIO E	MASSUDA CRYSTAL D	205 MEADOWS EDGE	ACTON	MA	01720
206 MEADOWS EDGE	B4-127-200	ENGLISH JEAN		206 MEADOWS EDGE	ACTON	MA	01718
207 MEADOWS EDGE	B4-127-201	GUERRA LUZ MARIA		207 MEADOWS EDGE	ACTON	MA	01718
271 BROWN BEAR CRSG	B4-127-271	WETZELL ROLF + GERALDINE TRUST	271 BROWN BEAR CROSSING REALTY	271 BROWN BEAR CRSG	ACTON	MA	01720
272 BROWN BEAR CRSG	B4-127-272	MOON MYUNGJIN	MOON YOODONG	272 BROWN BEAR CRSG	ACTON	MA	01718
273 BROWN BEAR CRSG	B4-127-273	CLASEN MATTHIAS	CLASEN SABINE	273 BROWN BEAR CRSG	ACTON	MA	01718
274 BROWN BEAR CRSG	B4-127-274	YOUNG MATTHEW J	SHERIDAN VALERY L	274 BROWN BEAR CRSG	ACTON	MA	01718
275 BROWN BEAR CRSG	B4-127-275	LIERAS EVE JACQUELINE TRUSTEE	THE EVE JACQUELINE LIERAS GS T	11152 TOYON HILL DR	LAKESIDE	CA	92040
281 BROWN BEAR CRSG	B4-128-281	ROEHR KAREN E		281 BROWN BEAR CRSG	ACTON	MA	01718
282 BROWN BEAR CRSG	B4-128-282	HAN LIANG		282 BROWN BEAR CRSG	ACTON	MA	01718
283 BROWN BEAR CRSG	B4-128-283	MURALIDHAR KRISHNAMURTHY	PADMANABHARAO RASHMI	283 BROWN BEAR CRSG	ACTON	MA	01720
284 BROWN BEAR CRSG	B4-128-284	MILLER CONNIE L		284 BROWN BEAR CRSG	ACTON	MA	01718
291 OLD BEAVERBROOK	B4-129-291	EPSTEIN HELEN		16260 NORTH 71ST ST	SCOTTSDALE	AZ	85254
291 OLD BEAVERBROOK	B4-129-291	EPSTEIN HELEN		291 OLD BEAVERBROOK	ACTON	MA	01720
292 OLD BEAVERBROOK	B4-129-292	KWON PAULA		292 OLD BEAVERBROOK	ACTON	MA	01718
293 OLD BEAVERBROOK	B4-129-293	VICENS MARIA D		293 OLD BEAVERBROOK	ACTON	MA	01720
294 OLD BEAVERBROOK	B4-129-294	SIVAPATHAM HARIPPRIYA M	RADHAKRISHNAN RAJU	294 OLD BEAVERBROOK	ACTON	MA	01718
295 OLD BEAVERBROOK	B4-129-295	DOVNAR OLGA		295 OLD BEAVERBROOK	ACTON	MA	01718

472 Main Street
Acton, MA 01720
Telephone (978) 929-6621
Fax (978) 264-9630

Brian McMullen
Assessor

Locus: 339 Nagog Hill Rd
Parcel ID: C4-14

Location	Parcel ID	Owner	Co-Owner	Mailing Address	City	State	Zip Code
296 BROWN BEAR CRSG	B4-129-296	HEFFERNAN JANET L/E	HORVATH JENNIFER A	296 BROWN BEAR CRSG	ACTON	MA	01718
297 BROWN BEAR CRSG	B4-129-297	FARRILL JACKSON J + PAMELA B,	JACKSON J FARRILL TRUST	PAMELA B FARRILL TRUST 16 CAPTAIN FORBUSH LANE	ACTON	MA	01720
301 OLD BEAVERBROOK	B4-130-301	KINGMAN BRADFORD S	KINGMAN CHRISTINE M	301 OLD BEAVERBROOK	ACTON	MA	01718
302 OLD BEAVERBROOK	B4-130-302	KUO SHIHHAU		302 OLD BEAVERBROOK	ACTON	MA	01720
303 OLD BEAVERBROOK	B4-130-303	MILLIGAN CHRISTOPHER R + CAROL		303 OLD BEAVERBROOK	ACTON	MA	01720
304 OLD BEAVERBROOK	B4-130-304	BONDAR ANDREY	KRYS BELLA	304 OLD BEAVERBROOK	ACTON	MA	01718
305 OLD BEAVERBROOK	B4-130-305	SCICCHITANI NANCY		305 OLD BEAVERBROOK	ACTON	MA	01720
306 OLD STONEBROOK	B4-130-306	ALFARO CORDELIA A		306 OLD STONEBROOK	ACTON	MA	01718
307 OLD STONEBROOK	B4-130-307	HORNER JAMES K		307 OLD STONEBROOK	ACTON	MA	01718
371 OLD BEAVERBROOK	B4-137-371	BUONO JOHN A	BUONO MELISSA C	371 OLD BEAVERBROOK	ACTON	MA	01720
372 OLD BEAVERBROOK	B4-137-372	DIBERNARDO VINCENZO	DIBERNARDO WANDA L	372 OLD BEAVERBROOK	ACTON	MA	01720
373 OLD BEAVERBROOK	B4-137-373	LARRATT LINDA M		373 OLD BEAVERBROOK	ACTON	MA	01718
374 OLD BEAVERBROOK	B4-137-374	PAQUIN ROBERT L		374 OLD BEAVERBROOK	ACTON	MA	01718
375 OLD BEAVERBROOK	B4-137-375	MLEZIVA SARAH		375 OLD BEAVERBROOK	ACTON	MA	01718
376 OLD BEAVERBROOK	B4-137-376	KOFMAN IRINA		376 OLD BEAVERBROOK	ACTON	MA	01720
377 OLD BEAVERBROOK	B4-137-377	LI ZHAOQIANG	HAN JING	377 OLD BEAVERBROOK	ACTON	MA	01718
378 OLD BEAVERBROOK	B4-137-378	PILMAN MICHAEL G	PILMAN MONICA C	378 OLD BEAVERBROOK	ACTON	MA	01718
381 OLD BEAVERBROOK	B4-138-381	MANDLOI AMIT	ARCHANA BARRY	381 OLD BEAVERBROOK	ACTON	MA	01720
382 OLD BEAVERBROOK	B4-138-382	GYIMESI BALINT	GRONAS BEATRIX GYIMESINE	85 SWANTON ST	WINCHESTER	MA	01890
383 OLD BEAVERBROOK	B4-138-383	PODLUZHNAYA NADEZHDA O	PODLUZHNAYA VYACHESLAV	383 OLD BEAVERBROOK	ACTON	MA	01718
384 OLD BEAVERBROOK	B4-138-384	HUANG MING-CHIA	HUANG SHU-FEN	384 OLD BEAVERBROOK	ACTON	MA	01718
385 OLD BEAVERBROOK	B4-138-385	ROYCE CHRISTINE M		385 OLD BEAVERBROOK	ACTON	MA	01718
386 OLD BEAVERBROOK	B4-138-386	COSTELLO CORRINE		26 OCEAN PINES DRIVE	SAGAMORE B	MA	02562
391 PINE CONE STRAND	B4-139-391	POLSHIN MAKSIM	POLSHINA OLENA	391 PINE CONE STRAND	ACTON	MA	01718
392 PINE CONE STRAND	B4-139-392	VEMBUSUBRAMANIAN MUTHUSAMY	VEMBUSUBRAMANIAN BALA	392 PINE CONE STRAND	ACTON	MA	01720
393 PINE CONE STRAND	B4-139-393	WILHELM SCOTT R	WILHELM CHRISTINE E	393 PINE CONE STRAND	ACTON	MA	01718
394 PINE CONE STRAND	B4-139-394	DZURAK EWA	DZURAK TOMASZ P	394 PINE CONE STRAND	ACTON	MA	01718
395 PINE CONE STRAND	B4-139-395	STELLING DANIELLE M		395 PINE CONE STRAND	ACTON	MA	01718
396 PINE CONE STRAND	B4-139-396	MAKSIMCHUK GEORGE	PHILIPPOVA JULIA	396 PINE CONE STRAND	ACTON	MA	01718

472 Main Street
Acton, MA 01720
Telephone (978) 929-6621
Fax (978) 264-9630

Brian McMullen
Assessor

Locus: 339 Nagog Hill Rd
Parcel ID: C4-14

Location	Parcel ID	Owner	Co-Owner	Mailing Address	City	State	Zip Code
397 PINE CONE STRAND	B4-139-397	JENKINS GARY W		397 PINE CONE STRAND	ACTON	MA	01718
398 PINE CONE STRAND	B4-139-398	GAETA MARK M	GAETA JENNIFER S	398 PINE CONE STRAND	ACTON	MA	01718
401 GREAT ELM WY	B4-140-401	KRIEGER MICHAEL A		401 GREAT ELM WY	ACTON	MA	01718
402 GREAT ELM WY	B4-140-402	FERRIERO BRENDA L		402 GREAT ELM WAY	ACTON	MA	01718
403 GREAT ELM WY	B4-140-403	VISSAPRAGADA VENKATA K	VISSAPRAGADA SAILAJA	403 GREAT ELM WY	ACTON	MA	01720
404 GREAT ELM WY	B4-140-404	WOLFE CYNTHIA L		404 GREAT ELM WY	ACTON	MA	01718
405 GREAT ELM WY	B4-140-405	HSIEH CHING TZONG	HSIEH PAY-LING L	405 GREAT ELM WY	ACTON	MA	01718
406 GREAT ELM WY	B4-140-406	BADAEV YUNONA V	BADAEV SERGEY V	406 GREAT ELM WY	ACTON	MA	01718
407 GREAT ELM WY	B4-140-407	PERETZ SAMUEL NILES	SCHEFSKY LORI	407 GREAT ELM WY	ACTON	MA	01720
408 GREAT ELM WY	B4-140-408	PEMBERTON ANNE D		408 GREAT ELM WAY	ACTON	MA	01718
421 GREAT ELM WY	B4-142-421	CHANG QINLIN		421 GREAT ELM WY	ACTON	MA	01718
422 GREAT ELM WY	B4-142-422	AVERY SUZANNE P		422 GREAT ELM WY	ACTON	MA	01718
423 GREAT ELM WY	B4-142-423	VAN SAVAGE KIMBERLY MULLIN		423 GREAT ELM WY	ACTON	MA	01720
424 GREAT ELM WY	B4-142-424	DIAMOND STANLEY M	DIAMOND DEBORAH	424 GREAT ELM WAY	ACTON	MA	01718
425 GREAT ELM WY	B4-142-425	GANGOLLI ESHA A		425 GREAT ELM WY	ACTON	MA	01720
426 GREAT ELM WY	B4-142-426	HERLIHY MAURA A		426 GREAT ELM WY	ACTON	MA	01718
431 GREAT ELM WY	B4-143-431	POTTER JEREMY T	LEVY ELYSE J	431 GREAT ELM WY	ACTON	MA	01720
432 GREAT ELM WY	B4-143-432	KNOWLTON ROBERT	KNOWLTON JUDITH	432 GREAT ELM WY	ACTON	MA	01718
433 GREAT ELM WY	B4-143-433	JAMIESON KATHLEEN C	GABER YAN AJ	433 GREAT ELM WY	ACTON	MA	01720
434 OLD STONEBROOK	B4-143-434	STEPHENSON MICHAEL L	FINN KATHLEEN	434 OLD STONEBROOK	ACTON	MA	01718
435 OLD STONEBROOK	B4-143-435	BARAN STEPHEN	BARAN BERNICE	435 OLD STONEBROOK	ACTON	MA	01718
436 OLD STONEBROOK	B4-143-436	KAGAN SERGEY	SHMIDT LYUBOV	436 OLD STONEBROOK	ACTON	MA	01720
441 GREAT ELM WY	B4-144-441	NEWMAN HOWARD B		441 GREAT ELM WY	ACTON	MA	01718
442 GREAT ELM WY	B4-144-442	HOUK SARA F		442 GREAT ELM WY	ACTON	MA	01718
443 GREAT ELM WY	B4-144-443	VENKATRAMAN SANJAY		443 GREAT ELM WY	ACTON	MA	01718
444 OLD STONEBROOK	B4-144-444	KERNS PETER M	OLIVEIRA CRISTINA M	444 OLD STONEBROOK	ACTON	MA	01720
445 OLD STONEBROOK	B4-144-445	HERSHEY ANTOINETTE F TR	THE ANTOINETTE HERSHEY TR-1997	445 OLD STONEBROOK	ACTON	MA	01718
446 OLD STONEBROOK	B4-144-446	BABOKHOV SERGEI	BABOKHOV MMARIA	446 OLD STONEBROOK	ACTON	MA	01718
514 GREAT RD	C4-2	DOUGHTY MATTEW D	DOUGHTY MICHELLE R	514 GREAT RD	ACTON	MA	01720
530 GREAT RD	B4-10-2	NAGOG PROPERTIES LLC		530 GREAT RD	ACTON	MA	01720

472 Main Street
Acton, MA 01720
Telephone (978) 929-6621
Fax (978) 264-9630

Brian McMullen
Assessor

Locus: 339 Nagog Hill Rd
Parcel ID: C4-14

Location	Parcel ID	Owner	Co-Owner	Mailing Address	City	State	Zip Code
532 GREAT RD	B4-10-1	NAGOG CONSTRUCTION MGMT LLC		532 GREAT RD	ACTON	MA	01720
20 NAGOG PK	B4-2-3	ALEVIZOS NAGOG LLC	KVA NAGOG LLC	396 WASHINGTON STREET #325	ACTON	MA	02842
30 NAGAOG PK	B4-2-11	ND/WINROCK ACTON LLC		2310 WASHINGTON STREET	NEWTOWN	MA	02462

The owner of land sharing a common boundary or corner with the site of the proposed activity (100 feet) in any direction, including land located directly across a street, way, creek, river, stream, brook or canal. The above are as they appear on the most recent applicable taxes.

BRIAN McMULLEN 23-Nov-11

PRINCIPAL ASSESSOR
Acton Assessors Office

MASS GIS

1,000' RADIUS MAP WITH ASSESSOR'S PARCELS

SCALE: 1" = 400'

N W E S

PARE

PARE CORPORATION
10 LINCOLN ROAD, SUITE 103
FOXBORO, MA 02035
(508) 543-1755

NAGOG POND DAM REPAIRS
ACTON, MASSACHUSETTS

PARE Project No. 10122.01 JANUARY 2012

NOTICE OF INTENT

3. Figures

Figure 1 – Site Location Map
Figure 2 – Annotated MassGIS Aerial Photograph
Figure 3 – FEMA Flood Insurance Rate Map

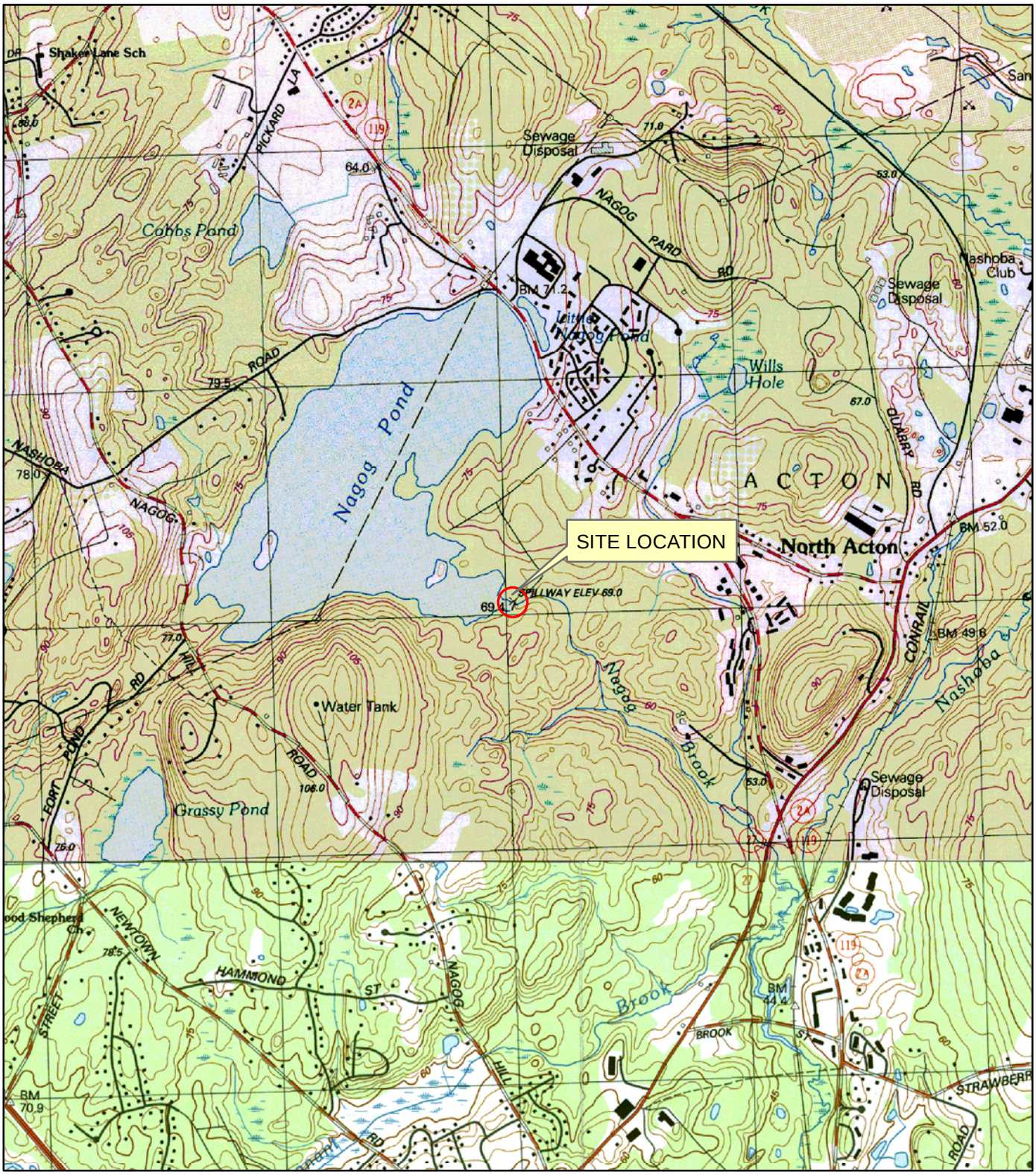

SITE LOCATION MAP

SCALE: 1" = 2,000'

PARE CORPORATION
10 LINCOLN ROAD, SUITE 103
FOXBORO, MA 02035
(508) 543-1755

PARE Project No. 10122.01 JANUARY 2012

FIGURE 1

NAGOG POND DAM REPAIRS
ACTON, MASSACHUSETTS

NOTICE OF INTENT

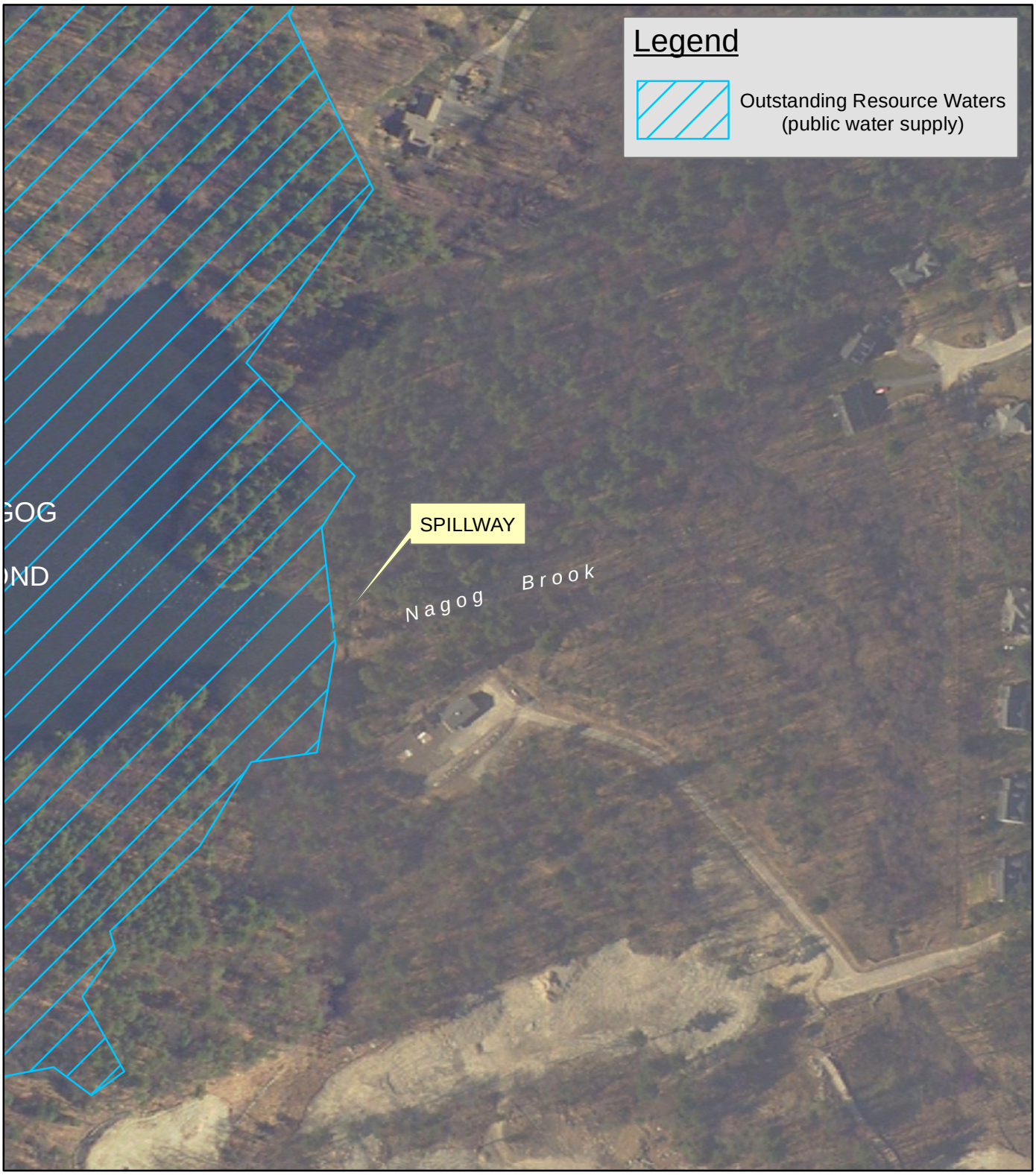

ANNOTATED AERIAL PHOTOGRAPH

SCALE: 1" = 200'

PARE CORPORATION
10 LINCOLN ROAD, SUITE 103
FOXBORO, MA 02035
(508) 543-1755

PARE Project No. 10122.01 JANUARY 2012

FIGURE 2

NAGOG POND DAM REPAIRS
ACTON, MASSACHUSETTS

NOTICE OF INTENT

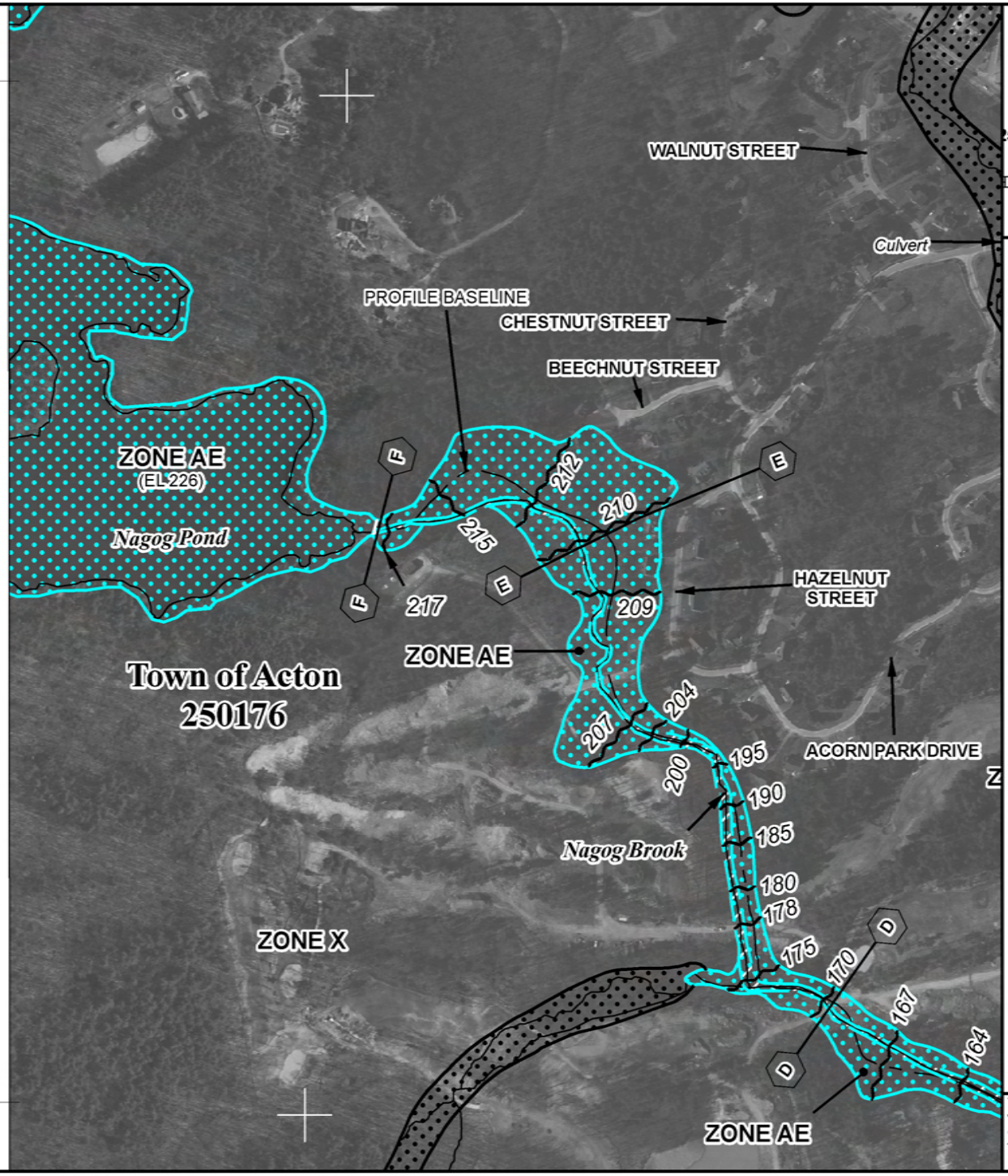

MAP SCALE 1" = 500'

250 0 500 1000 FEET

METER

NFIP

NATIONAL FLOOD INSURANCE PROGRAM

PANEL 0243E

FIRM

FLOOD INSURANCE RATE MAP

MIDDLESEX COUNTY, MASSACHUSETTS
(ALL JURISDICTIONS)

PANEL 243 OF 656

(SEE MAP INDEX FOR FIRM PANEL LAYOUT)

CONTAINS:

COMMUNITY	NUMBER	PANEL	SUFFIX
ACTON, TOWN OF	250176	0243	E
LITTLETON, TOWN OF	250200	0243	E
WESTFORD, TOWN OF	250225	0243	E

Notice to User: The **Map Number** shown below should be used when placing map orders; the **Community Number** shown above should be used on insurance applications for the subject community.

MAP NUMBER
25017C0243E

EFFECTIVE DATE
JUNE 4, 2010

Federal Emergency Management Agency

This is an official copy of a portion of the above referenced flood map. It was extracted using F-MIT On-Line. This map does not reflect changes or amendments which may have been made subsequent to the date on the title block. For the latest product information about National Flood Insurance Program flood maps check the FEMA Flood Map Store at www.msc.fema.gov

4. Project Narrative

I. Executive Summary

This Notice of Intent is submitted under the Limited Project provisions of 310 CMR 10.53(3)(i) for the maintenance and repair of the Nagog Pond Dam in Acton, Massachusetts. The repairs are necessary to comply with current dam safety regulations, avoid the issuance of dam safety order to the Owner by the Massachusetts Department of Conservation and Recreation, Office of Dam Safety, and to protect the downstream public and the environmental resources created by the dam.

Nagog Pond Dam (National ID MA00129 / State ID 4-9-2-5) is an approximately 170-foot long concrete dam with a 10-foot wide uncontrolled spillway, a 20-foot wide broad crested auxiliary spillway, a gated low-level outlet, a blow off valve, and water supply intake structures. The dam is currently used to increase storage in Nagog Pond, a Great Pond, for the purposes of water supply for the Town of Concord. The dam is currently classified as a large sized, Significant (Class II) hazard potential dam. Based upon a December 2010 detailed evaluation, as well as previous inspections, the dam has been found to be in Poor condition due to significant deterioration of concrete in many area of the dam, an inoperable low level outlet, growth of large trees and other unwanted vegetation in the area of the dam, and areas of apparent seepage. Dams in similar condition throughout the state have been issued dam safety orders and notices of noncompliance requiring immediate corrective action be taken to address the poor condition rating; however, due to the Town's proactive dam repair approach, issuance of such documents are being withheld provided continued progress towards implementing repairs to address the dam safety deficiencies.

Remedial measures being proposed to address the observed deficiencies include:

- Chipping, removal, and replacement of deteriorated concrete along the length of the dam
- Buttressing of the dam section to increase stability and extend the life expectancy of the dam
- Providing stone over wash protection and collection drain to address freeboard limitations
- Removal of large trees from the vicinity of the dam in accordance with current dam safety policy
- Appurtenant work to improve the integrity of the dam and maintain its water supply functions

Wetland resource areas in the project vicinity include Bank, Land Under Waterbodies, and Bordering Vegetated Wetland. Wetland impacts have been avoided and minimized to the extent possible, and the remaining, unavoidable impacts are allowable under 310 CMR 10.53(3)(i) of the Regulations of the Massachusetts Wetlands Protection Act. The following sections describe the existing site conditions, project need, proposed work, alternatives evaluated, proposed wetland impacts, and compliance with the applicable provisions of the Wetlands Protection Act.

II. Introduction

This Notice of Intent, submitted to the Acton Conservation Commission and Department of Environmental Protection pursuant to the Massachusetts Wetlands Protection Act (M.G.L. c. 131, s. 40) and Regulations (310 CMR 10.00), addresses the proposed Nagog Pond Dam Repairs project. The repairs are necessary to comply with current dam safety regulations and to ensure the future safety of the downstream public, protect the public water supply function provided by the impoundment, and preserve the environmental resources created by the dam.

The NOI is submitted pursuant to the Limited Project provision of 310 CMR 10.53(3)(i), which applies to "the maintenance, repair and improvement (but not substantial enlargement) of structures, including dams and reservoirs and appurtenant works to such dams and reservoirs, buildings, piers, towers, headwalls, bridges, and culverts which existed on the effective date of 310 CMR 10.51 through 10.60 (April 1, 1983)."

According to Section F4.2 of the Acton Wetlands Protection Bylaw, "*no Notice of Intent hereunder need be filed in connection with maintaining, repairing, or replacing, but not substantially changing or enlarging, an existing and lawfully located structure or facility used in the service of the public to provide electric, gas, water, telephone, or telecommunication services*." The impoundment provides public water supply to the Town of Concord, therefore the proposed dam repairs are exempt from any additional municipal permitting requirements specified in the Bylaw.

The dam is located in a cove in the southeast portion of Nagog Pond near the location of the Town of Concord Ozone Treatment facility (OTF). The dam can be accessed from either a paved access road to the OTF off of Acorn Drive or via a dirt road leading from a common access driveway off the cul-de-sac at the end of Breezy Point Road. The project is located on Lot 14 on Acton Assessor's Map C4, street address 339 Nagog Hill Road.

The dam is owned, operated, and maintained by the Town of Concord as part of their water supply infrastructure. The pond is listed as a Great Pond, with records indicating the original construction of the dam in 1874. Records suggest that the current dam structure was constructed in 1909/1910. The dam is currently in poor condition with significant structural deficiencies and lack of an operable low level outlet, a requirement of current dam safety regulations.

The following narrative discusses the project background and existing site conditions; demonstrates the need for the work; describes the proposed repairs and modifications to the dam; discusses activity within jurisdictional areas; and demonstrates project compliance with the applicable regulatory provisions of 310 CMR 10.00. The existing site conditions and the proposed repairs and modifications are shown on plans entitled "*Nagog Pond Dam Repairs*" prepared by Pare Corporation, dated January 2012 (the "Project Plans"). The Project Plans are designated as Section 6 of this NOI.

III. Existing Site Conditions and Background

a. Nagog Pond Dam

Nagog Pond Dam (National ID MA00129/State ID 4-9-2-5) is located within Middlesex County in the Town of Acton, Massachusetts. The dam is located in a cove in the southeastern area of Nagog Pond near the Town of Concord Ozone Treatment Facility. The dam is currently classified as a **Large** size, **Significant** (Class II) hazard potential structure under Commonwealth of Massachusetts dam safety rules and regulations stated in 302 CMR 10.00 and amended by Chapter 330 of the Acts of 2002.

Nagog Pond Dam consists of a 168-foot long mass concrete structure with a maximum structural height of approximately 15 feet. The dam system includes the gravity section, a primary spillway, an auxiliary spillway, a gatehouse with water supply and blow off pipes, and a low level outlet.

The mass concrete section of the dam consists of an unreinforced concrete section with 1"H:1'V upstream face, a 4-foot wide top of dam, and a 3"H:1'V downstream face. The concrete section was apparently constructed of mass concrete embedded with granite blocks salvaged from the original dam structure. Along the base of the mass concrete section, a 2-foot deep by 2-foot thick keyway extends below the base of the dam into the underlying bedrock foundation.

The primary spillway, located right of the gatehouse, consists of a 10-foot long spillway with steel weir plate. The crest of the weir plate is set approximately 1.5 feet below the top of the dam elevation. Vent pipes are provided along the downstream side of the weir plate, with the intakes to the vent pipes located in the downstream face of the dam.

The auxiliary spillway is located immediately right of the primary spillway. The spillway consists of an approximately 20-foot wide broad crested concrete weir set approximately 0.3 feet below the top of the dam elevation.

The low level outlet is located left of the gatehouse structure. The outlet consists of a 24-inch square conduit extending through the gravity dam section and discharging at the toe of the concrete structure. The outlet is regulated by a slide gate mounted on the upstream face of the dam.

The gatehouse, located near the center of the dam, consists of a multi-chamber control structure with several inlet, outlet, and gate control structures. The chambers at the gatehouse includes several inlets, including a 16-inch diameter cast-iron inlet to the upstream face of the gatehouse and two 12-inch diameter inlets to the right side of the gatehouse; the inlets to these pipes are reportedly located approximately 1700 feet upstream of the dam within deeper areas of the impoundment. The chamber is divided into three sub chambers. The upstream inlet and one of the 12-inch inlets leads to a rectangular chamber at the upstream side of the gatehouse. Flows through this chamber pass through screens to the downstream half of the chamber. Within the downstream half of the chamber, flow either enters the 16-inch diameter supply line or may be directed via a gate to the blow off chamber. The blow off chamber is located in the downstream right corner of the gatehouse and includes two vented blow off pipes that outlet through the downstream face of the dam. Water can also be fed directly into the blow off chamber via the second 12-inch diameter inlet pipe.

b. Wetlands and Floodplain

Wetland resource areas present in the vicinity of the dam include the Banks and Land Under Water (LUW) associated with Nagog Pond, an enhanced Massachusetts Great Pond; Banks associated with Nagog Brook and an unnamed intermittent tributary stream; and an area of Bordering Vegetated Wetland (BVW) along the south side of the outlet. The Banks and Bordering Vegetated Wetlands on the site have associated 100-foot Buffer Zone that occupies the entire site outside of these resource areas.

According to the USGS Topographic Quadrangle for the site, Nagog Pond Brook is shown as a perennial waterway. However, the Acton Conservation Commission has previously determined the portion of the stream in the project area to be intermittent. Therefore, there is no 200-foot Riverfront Area onsite.

Flag series C and D define the edges of a BVW complex bordering the outlet stream on the downstream right side of the project area. This wetland contains an intermittent stream channel originating at a drainage outfall at the southern end of the site. The stream begins as a narrow channel extending downslope and transitions to a broad, braided network of flow channels within the BVW area extending northeast toward Nagog Brook. Two additional wetland areas, defined by flag series A and E, are located in the vicinity of the project area, however are outside of the Limits of Disturbance.

According to the FEMA Flood Insurance Rate Map (FIRM) for the Town of Acton (community-panel no. 25017C 0243 E, revised June 4, 2010), BLSF is located within the portions of the project area bordering on the impoundment and outlet. Floodplain on the site is mapped as Zone AE, areas with 1% annual chance of flooding. Flood elevations are mapped as 226 feet within Nagog Pond upstream of the dam, and 217 feet on the downstream side of the dam.

Wetlands on the site are discussed in greater detail in the attached Wetland Field Report and BVW delineation data forms, attached in Section 5 of this NOI.

d. Other Environmental Considerations

According to the most recent available MassGIS data, the site is not located within or in the vicinity of any Massachusetts Natural Heritage and Endangered Species Program (NHESP) Priority or Estimated Habitats of Rare Species, or Areas of Critical Environmental Concern. No Certified or Potential Vernal Pools have been identified on or within the vicinity of the site (MassGIS data layers PHAB_POLY, ESTHAB_POLY, CVP_PT, pvpx1 (2008), ACECs_POLY (2009)).

According to MassGIS data layer ORW_POLY (2010), the upstream project area is located within Outstanding Resource Waters associated with Nagog Pond, which provides public water supply to the Town of Concord.

IV. Project Need and Proposed Work

In 2010, Pare Corporation (PARE) completed a detailed evaluation of the dam to further assess previously reported and documented conditions at the dam. Of primary concerns was the excessive deterioration of concrete along the upstream and downstream face of the gravity concrete dam structure, as well as the overall structural stability of the dam section and its compliance with current dam safety regulations. The evaluation made the following conclusions:

- While the surface of the gravity dam is deteriorated, significant portions of sound concrete remain within the gravity cross section.
- The global stability of the dam section narrowly meet stability factors of safety established by current state regulations.
- The dam lacks adequate freeboard; over wash during storm events may impact the overall stability of the dam by eroding downstream passive soils
- There is significant growth of large trees in the area of the dam that could damage the structure in the event of uprooting
- The low level outlet is currently inoperable and requires replacement and approach channel improvements to comply with dam safety regulations
- The exposed gatehouse foundation is significantly deteriorated
- The concrete surrounding the primary spillway and associated vent pipes is severely corroded

The Massachusetts Department of Conservation and Recreation Office of Dam Safety (ODS) has acknowledged the Town's continued effort to address dam safety concerns at the site. However, ODS has indicted that if progress towards addressing the deficiencies is not continued, the Commonwealth will issue a dam safety order requiring the dam owner restore the condition of the dam to a safe operating condition.

Based upon conceptual design approaches and alternatives evaluated for addressing the observed dam safety deficiencies at the dam, the Town of Concord and PARE have developed a repair program. Each element of the project is discussed briefly below.

1. ***Clear all trees and unwanted vegetation; Grub root systems:*** Based upon available information, the proposed work will include the removal of approximately 12 mature trees, ranging from 6-inches in diameter to more than 24-inches in diameter. Trees identified for removal include several trees greater than 50-feet tall which may require specialty tree removal operations to safely remove the trees while avoiding damage to the existing dam structure and surrounding resource areas.

2. ***Restore operability to the low level outlet and gatehouse controls:*** Restoring gate operability will consist of the removal and disposal of the existing gates. New gates, likely constructed of aluminum will be installed to provide an operable structure. Installation of the low level outlet gate (1) will be completed through the use of a cofferdam. Installation of the gates (3) within the gatehouse will require dewatering of the gatehouse. Dewatering will be coordinated further to enable bypass of flows through the dewatered work area or completing the work outside of peak demand time frames.

3. ***Address concrete spalling/deterioration through a chipping, removal, and concrete repair project***: Based upon observed conditions, it is anticipated that a variety of repair options will be required, with the options varying based upon the expected depth of repair required and ranging from a 6-inch to 18-inch deep repair section. Isolated areas of deterioration and the spillway will require demolition of the section in its entirety and reconstruction with new reinforced concrete. Proposed repairs also include repairs to deteriorated concrete on the exterior of the gatehouse foundation. Based upon available information, concrete in the gatehouse interior is in satisfactory condition.

4. ***Address freeboard concerns through the installation of stone riprap along the downstream side of the concrete dam.*** A 5-foot wide stone riprap apron will be designed to be installed along the top of the downstream slope along the length of the dam. The apron will protect the slope from erosion resulting from waves overtopping the crest of the dam. Over wash into the riprap section will be collected in a drain pipe within the bottom of the riprap and discharged to the realigned spillway channel.

5. To increase the life span of the repairs and further stabilize the dam section, the downstream side of the dam will be filled with a 3H:1V earthen slope. As the existing channel will be filled due to regrading activities along the downstream side of the dam, precast concrete culverts will be extended from the existing outlets to the limits of filling. The spillway channel will be realigned to convey flow away from the dam. Channel improvements will be provided in the area downstream of the low level outlet culvert in order to tie in to the proposed grade of the outfall.

6. Implement modifications to the existing water supply line to allow for the completion of the proposed work and to improve blow off capacity to protect water supply lines. As part of the proposed work, a new 1" diameter water line will be installed to provide a means for collecting water samples for water quality testing. The proposed line is intended to replace an existing 1" diameter line that was not properly installed during past work at the site. The line will run from a proposed pump chamber in the area downstream of the dam between the primary spillway channel and low level outlet culvert.

7. Replace the existing pipe beneath the footpath to the OTF with two new 8" pipes.

IV. Alternatives Analysis

Throughout the evaluation and design phases of this project, a variety of alternatives have been considered to address the current conditions of the dam. As part of the Phase II Report, the following alternatives were considered. Each alternative is described in more detail in the Phase II Report.

1. ***No Action***: This option consists of taking no measures to address the observed deficiencies at the dam. Given the progressive and continued deterioration of the concrete at the dam, and the potential for dam failure in the event unabated deterioration, this alternative is not feasible and not considered further for any of the observed deficiencies.

2. ***Concrete Deterioration***: The following alternatives were considered as alternative solutions to addressing concrete deterioration:

    a. Patching: Remove deteriorated concrete from the surface of the dam to a depth of approximately 3 to 6 –inches. Apply concrete facing to provide a sound surface. While this option would address current concerns, the design life with this approach was not considered to provide a durable repair. Depending on the quality of the work, a patch would be expected to last approximately 10 years, at which time additional work would be expected at the site. Due to the short expected life span of this option combined with limited cost savings, patching was not considered further.

b. Reconstruction: Demolish the existing dam in its entirety; Construct a new gravity concrete dam section. While feasible, this option would require complete demolition of the existing dam and reconstruction of a similar structure. However, cores of the existing dam indicated that sound concrete is present within the dam section; removal and demolition of the entire structure would remove concrete that could otherwise be salvaged and incorporated into the work, thereby limiting overall costs, project duration, and extent of impacts.

c. New Dam: Construct a new dam across the downstream channel downstream of the dam. While feasible, the environmental impacts and costs associated with this approach were not warranted.

d. Upstream Cutoff Wall: Install a driven sheet pile wall shortly upstream of the existing dam; Fill the void between the cutoff wall and dam structure with concrete or other impermeable fill. While this option may reduce seepage rates through the existing dam and reduce the rate at which concrete deterioration is occurring, is does not address deteriorated conditions of the existing concrete. As such, the impacts to surrounding areas were not considered warranted to evaluated this option further. Similarly, a geomembrane, or plastic liner, was considered for affixing to the upstream face of the dam to prevent continued seepage through the dam; however, this option would also not address observed deterioration.

e. Selective Demolition: Demolish deteriorated concrete to the sound concrete core. Recast concrete to mimic the existing dam. This option was selected as it provided the soundest repair option while limiting overall expense and project duration.

For each of the options, realignment of the downstream channels and installation of a stability berm along the downstream side of the dam was recommended. The intent of realigning the channels is to direct flow away from the concrete dam, thereby reducing exposure of the dam to freeze/thaw of water flowing along the face of the dam. Similarly, installation of a downstream buttress will not only increase the overall stability of the dam, it will insulate the dam section from freeze/thaw cycles, and thereby increasing the overall anticipated design life.

3. ***Freeboard Limitations***: The following alternatives were considered as alternative solutions to addressing freeboard limitations:

a. Crest Wall: Install a low wall along the upstream side of the top of the dam designed to deflect wave action and prevent splash or overtopping of the dam by waves. The crest wall could be structurally connected to the existing concrete dam, thereby limited the size and extents of the required walls. Based upon the freeboard evaluation completed as part of this study, the crest wall would need to be approximately 2-feet high to prevent over wash during maximum pool conditions. The required height of this option could be reduced by incorporating a recurve into the design of the upstream side of the wall, thereby redirecting wave runup back into the impoundment, as opposed to straight up as is achieved by a vertical wall.

b. Raise Top of Dam: Raise the top of the dam elevation by approximately 2 feet to provide sufficient freeboard during all hydrologic loading events. This could be accomplished by increasing the top of dam elevation with a cast-in-place concrete section. The wall would

also need to be extended into the abutments to prevent flow around the ends of the wall. While feasible, this option would need to consider impacts to the surrounding areas should the level of the impoundment rise to the top of the wall. Further, the potential increase in loading associated with the level of the impoundment at the top of the new dam impacting the stability of the gravity section during maximum pool conditions would need to be evaluated with improvements implemented should additional passive resistance be required. Given the impacts to the surrounding areas and the abutments, this option was not considered further.

c. Downstream Scour Protection: As the dam consists of a concrete gravity structure, it is not susceptible to erosion during overtopping or waves breaking over the top of the dam. However, the soil and weathered bedrock downstream of the concrete dam should be protected from erosion as it provides passive resistance that improves the overall stability of the wall. A layer of riprap or other non-erosive surface along the downstream side of the dam would function to protect these soils. The riprap would extend approximately 5-feet downstream of the concrete top of dam and include a collection pipe to convey over wash flows to the spillway channel.

Based upon a review of costs, permitting implications, function, and maintenance requirements, the Town, upon PARE's recommendation selected installation of scour protection along the downstream side of the dam as the preferred alternative for implementation.

VI. Diversion of Water

Two options for control of water were considered during the design phases of the work. These include the installation of a cofferdam and implementation of a pond drawdown. While drawdown of the pond would eliminate the hazard associated with the impoundment being retained by a temporary structure, drawdown of roughly 3 feet would result in exposing roughly 30 acres of land under water. Further, the impoundment is utilized as a water supply source; as such, temporary loss of the water supply was not considered a desirable option for the Owner.

Given the relatively shallow depths along the upstream side of the dam, and predominantly sound pond bottom conditions, cofferdams were identified as the preferred approach to provide stable control of water measures. While the Contractor will be responsible for final design of the cofferdam system by a licensed professional engineer, it is anticipated that the cofferdam will incorporate 3-foot cube sand bags, concrete barriers, or other structures that can readily be placed and removed. The system will likely include plastic sheeting to limit the seepage through the cofferdam. Use of earthen fill that cannot be removed will not be permitted. Use of steel frame with heavy tarp cofferdam construction will also not be permitted by the Owner.

Based upon existing site conditions and the necessity to maintain flow throughout construction, it is anticipated that the project will be completed in three phases. It should be noted that final phasing of the work will be the responsibility of the contractor and subject to approval of the Owner. The anticipated sequence includes:

Phase I: The first phase will include installation of a cofferdam upstream of the left half of the dam, including the area left of the gatehouse. During Phase I, repairs will be completed to concrete along the upstream side of the dam left of the gatehouse, including concrete repair to the upstream side of the dam, portions of the gatehouse foundation, and restoration of operability to the low level outlet. During this phase, flow will be maintained through the existing spillway.

Phase II: The second phase will include partial removal of the cofferdam left of the spillway to allow flow to be diverted through the restored low level outlet gate. For construction access purposes, a temporary pipe will be installed across the outlet channel immediately downstream of the outlet to convey flows downstream and allow construction equipment to cross the channel near the location of the existing footbridge. Phase II will include a cofferdam upstream of the dam and to the right of the gatehouse. During this phase, work to be completed include concrete repairs to the upstream side of the gatehouse and dam right of the gatehouse; repairs to the spillway and realignment of the spillway channel; repairs to the downstream side of the dam from the gatehouse to the right end; installation of the downstream buttress from the right end of the dam to the gatehouse; and replacement of the foot path culvert.

Phase III: The third phase will divert water through the new spillway channel. Cofferdams will be removed in their entirety from the right side of the dam and restored left of the gatehouse. During this phase, repairs to be completed include: concrete repairs along the downstream side of the dam left of the gatehouse; modifications to the gravity line pipes; installation of the low level outlet culvert and headwall; completion of the buttress and over wash protection installation; and, connection of the blow off to the outlet culvert.

Gatehouse Work: Temporary dewatering of the gatehouse will be required to complete installation of new gates. This dewatering will likely be completed through the installation of inflatable bladders within intake pipes. The timing of this work will be coordination with the Town of Concord to prevent interruption of water supply during peak seasonal demand.

At no time during the completion of the work will the contractor be permitted to artificially lower the level of the impoundment. The contractor may provide additional diversion to protect his work, however, flow must be maintained throughout the project unless low pond levels are experienced resulting for normal weather and operational procedures.

VII. Erosion and Sedimentation Control

Erosion and sedimentation controls shall consist of hay bales, silt fence barriers, and cofferdams installed at the limits of work as shown on the Project Plans. The contractor shall be responsible for installing and maintaining all erosion controls as indicated in the contract documents. The contractor shall limit stockpile of materials to the indicated staging areas. All stockpiled material shall be surrounded by straw bales and silt fence.

VIII. Anticipated Construction Sequence

The following sequence is intended to be general in nature. Although it is likely that some of the work items will overlap, construction sequences for the various project components are described separately and may not necessarily proceed in consecutive order. All work shall be performed in accordance with the Project Plans and Specifications and conditions of approved permits.

1. Install erosion and sediment control devices including straw bales and silt fence
2. Install Phase I cofferdam; Complete Phase I work:
   a. Excavate along the upstream side of the dam left of the gatehouse and the downstream side left of the low level outlet channel to sound concrete (approximated near 4-feet); Remove accumulated sediment and debris from the low level outlet approach channel
   b. Remove and dispose existing gate
   c. Chip and remove deteriorated concrete to sound concrete
   d. Form and place appropriate concrete repair
   e. Install new low level outlet gate; stabilize approach channel.
   f. Flood cofferdam; remove cofferdam to near normal pool elevation to allow to act as an overflow weir.
3. Install Phase II cofferdam; Complete Phase II work:
   a. Install temporary piping and access across outlet channel; divert flow through the low level outlet
   b. Excavate along the upstream side of the dam right of the gatehouse and the downstream side right of the gatehouse to sound concrete (approximated near 4-feet)
   c. Replace the culvert beneath the footpath
   d. Chip and remove deteriorated concrete to sound concrete
   e. Form and place appropriate concrete repair; replace excavated soils
   f. Reconstruct spillway control sections
   g. Install downstream buttress and over wash protection
   h. Construct realigned spillway channel
   i. Remove the cofferdam in its entirety; restore flow to spillway channel
4. Restore Phase I cofferdam; Complete Phase III work:
   a. Complete concrete repairs along the downstream face of the dam.
   b. Complete modifications to the gravity line configuration.
   c. Remove temporary piping and access way; Install low level outlet culvert, cradle, and headwall; backfill to proposed lines
   d. Install downstream buttress and over wash protection
   e. Construct blow off sedimentation basin
   f. Complete gatehouse repairs/gate replacements
   g. Remove the cofferdam in its entirety
5. Loam and seed the downstream areas and other areas disturbed by construction activities; restore staging areas.
6. Restore all areas of the site to preconstruction conditions and demobilize

IX. Wetland Impacts and Regulatory Compliance

The proposed project will result in permanent alterations to Bank, as well as temporary impacts to Bank, Bordering Vegetated Wetland (BVW), and Land Under Waterbody (LUW). In addition, most of the site located outside of these resource areas is located within the 100-foot Buffer Zone of Bank and BVW. Due to the nature of this project, work within wetland resource areas is unavoidable. All efforts have been made to avoid or minimize permanent impacts to wetlands. Impacts to the resource areas on the project site, and compliance with the applicable performance standards, are described in the following sections.

a. Bank

A cumulative total of approximately 324 linear feet of Bank will experience temporary and permanent alterations from the proposed repairs. Permanent impacts to bank are limited to the downstream area along the edges of Nagog Brook, where 124 linear feet of bank will be altered from the proposed downstream dam buttress, box culvert installation, and downstream channel improvements. This filling is necessary in order to stabilize the downstream side of the dam, and the proposed box culverts have been designed to minimize alterations to the character of the stream channel.

Approximately 16 linear feet of Bank along the B-series intermittent stream will experience temporary impacts for the installation of the proposed new 1" water line. It is anticipated that this installation will require the temporary excavation of an approximately 4-foot deep trench through a section of the B-series stream and C/D series wetland. The line installation will be accompanied by a conduit for the installation of electric wire to provide power to the pump chamber as well as provide for future monitoring equipment with the gate house. The stream banks and surrounding wetland in this area is colonized by an emergent plant community, and no removal of woody wetland vegetation is proposed. In addition, up to 8 linear feet of bank surrounding the footpath across the B-series intermittent stream may be temporarily disturbed for the proposed pipe replacement in this location. Upon completion of the construction in these locations, the excavated areas will be backfilled to grade and seeded appropriately.

The proposed concrete wall repairs on the upstream side of the dam will result in approximately 115 linear feet of temporary impacts along this section of manmade Bank. This work includes repairs to concrete in various states of deterioration along the length of the wall, and will not result in any expansion or change in character to this feature. Construction access, installation of erosion controls and dewatering, and vegetation clearing along the natural bank at either side of the concrete wall will result in up to 52 linear feet of additional, temporary impacts to Bank of Nagog Pond.

None of the proposed temporary or permanent bank impacts will negatively affect the physical stability of the Bank, ground water and surface water quality, or whatever capacity the Bank may have to provide breeding habitat, escape cover and food for fisheries. The 124 linear feet of bank to be permanently impacted consists of highly erosive and sparsely vegetated channel slopes directly downstream of the dam wall. This section of the Bank lacks an established vegetation community, and provides minimal potential for use by wildlife. The remainder of impacts to bank are temporary in nature. Pursuant to the Limited Project provisions of 310 CMR 10.53(3)(i), the applicant requests that the Conservation Commission waive the requirement for a wildlife habitat evaluation for work affecting more than 50 feet to Bank.

b. Land under Waterbody

Approximately 2,115 square feet of Land Under Waterbody (LUW) associated with Nagog Pond will be temporarily impacted by dewatering with cofferdams. Cofferdams were selected as the preferred method of dewatering for this project, as they minimize impacts to Land Under Water. Alternatively, a temporary drawdown of the pond would result roughly 30 acres of Land Under Water to be exposed along the perimeter of the pond. Further, the impoundment is utilized as a water supply source for the Town of Concord, and temporary loss of water supply was not considered a desirable option for the applicant.

As discussed in Section VI, the proposed cofferdams will be installed in three phases in order to accomplish work at each spillway while maintaining flow to the downstream area. In addition, temporary dewatering of the gatehouse will be required to complete installation of new gates. Upon completion of the work, normal water levels will be restored to the dewatered areas, and the impacted Land Under Waterbody will be allowed to naturally revegetate.

c. Bordering Vegetated Wetlands

No permanent alterations to Bordering Vegetated Wetlands (BVW) are proposed. Installation of a new 1" underground water line across the C/D series wetland area will result in approximately 507 square feet of temporary impacts to the resource area. The purpose of the proposed 1" water line is to provide a means for collecting water samples for water quality testing. The proposed line is intended to replace an existing 1" diameter line that was not properly installed during past work at the site. The line will run from a proposed pump chamber in the area downstream of the dam between the primary spillway channel and low level outlet culvert and extend across the intermittent stream and associated BVW east of the dam. The line will be installed within a 4-foot deep trench excavated through the work area and connected to existing lines on the hillside near the Ozone Treatment Plant. The line installation will be accompanied by a conduit for the installation of electric wire to provide power to the pump chamber as well as provide for future monitoring equipment with the gate house.

Due to the location of the dam and the layout of the site, it is not feasible to provide the necessary water line while avoiding a temporary construction crossing through the wetland. The proposed alignment of the pipeline minimizes impacts to wetlands to the extents practicable, and no loss of BVW will result from the project. The wetland in this area is colonized by an emergent plant community, and no removal of trees or other woody wetland vegetation is anticipated. Upon completion of the work, the area will be backfilled to grade and seeded with an approved wetland seed mix.

d. Bordering Land Subject to Flooding

According to the FEMA Flood Insurance Rate Map (FIRM) for the Town of Acton (community-panel no. 25017C 0243 E, revised June 4, 2010), flood elevations are mapped as 226 feet within Nagog Pond upstream of the dam, and 217 feet on the downstream side of the dam. Topographic survey indicates that the flood elevations do not overtop the delineated bank of Nagog Pond or Nagog Brook within the work area, and therefore no floodplain alterations are proposed. Installation of a new low-level outlet culvert and downstream channel improvements within the floodway channel of Nagog Brook will result in a net cut within the channel, increasing the flood volume of this area by approximately 18 Cubic Yards below elevation 217. No losses in flood volume will result from the project.

e. 100-Foot Buffer Zone

Most of the project area outside of Bank and BVW is located within the 100-foot Buffer Zone of these resource areas. As with all dam repair projects, work within the Buffer Zone is unavoidable due to the nature of the work. Permanent alterations within the buffer zone include the impacts discussed in the previous sections, as well as additional grading and construction of the proposed stilling basin. Additional temporary alterations within the buffer zone are anticipated for construction vehicle access, staging and stockpile areas, installation of erosion controls, and clearing unwanted woody vegetation from the dam. Areas outside of the 100-foot Buffer Zone are limited to a portion of the staging area at the north side of the project area.

X. Summary

This NOI, submitted pursuant to the Limited Project provisions of 310 CMR 10.53(3)(i), addresses the proposed repairs to Nagog Pond Dam in Acton. The impoundment provides public water supply to the Town of Concord, therefore the proposed dam repairs are exempt from the additional municipal permitting requirements specified in the Bylaw. Proposed repairs will include removal and replacement of deteriorated concrete, restoration of the low level outlet, restoration of the gatehouse and spillway gates, water supply line modifications, construction of an earthen stability buttress along the downstream side of the dam, and installation of over wash protection along the downstream side of the dam.

The project is necessary to promote public safety, protect the water supply function of Nagog Pond, and protect the ecological functions and values associated with the pond. Wetland resource areas on the project site include Land Under Waterbody, Bank, BVW, and permanent resource area impacts are limited to approximately 124 feet of bank alterations. Given the nature of the project involving required repair work to a dam, most of the site is located within the 100-foot buffer zone of the BVW and Bank resource areas. On behalf of the applicant, PARE respectfully requests that the Acton Conservation Commission issue an Order of Conditions allowing the repairs to proceed as proposed.

5. Wetland Delineation Documentation

Wetland Field Report
BVW Data Forms
Annotated Site Photographs

WETLAND FIELD REPORT

PROJECT TITLE: Nagog Pond Dam Flagging **DATE:** 3/2/10

LOCATION: Acton, Massachusetts **WEATHER:** Sunny, 40 degrees

PARE JOB NO.: 10122.00 **PERFORMED BY:** Lauren Hastings

DISCUSSIONS AND COMMENTS

Wetland resource areas in the vicinity of the Nagog Pond Dam were defined and delineated in accordance with the Massachusetts Wetlands Protection Act Regulations (310 CMR 10.00, referred to as the Regulations), Chapter F: The Acton Wetlands Protection Bylaw, and the methodology specified in the publication entitled Delineating Bordering Vegetated Wetlands under the Massachusetts Wetlands Protection Act (Jackson, 1995). Inspection and delineation of wetlands were completed on March 2, 2010.

The Nagog Pond Dam impounds Nagog Brook to create Nagog Pond, a linear impoundment located to the west of Main Street in Acton. The project area and associated freshwater wetlands are located within the Concord River Basin. No Areas of Critical Environmental Concern, Estimated or Priority Habitats of rare species, or Certified or Potential Vernal Pools are located on the site. According to Mass GIS data layer ORW_POLY (2009), Nagog Pond is mapped within Outstanding Resource Waters.

Nagog Pond Dam's outlet, Nagog Brook, is mapped as a perennial stream on the USGS Topographic Quadrangle for the site. However, the Acton Conservation Commission has made a previous determination that the portion of the stream directly downstream of the dam is classified as an Intermittent Stream, and therefore this stream does not have an associated 200-foot Riverfront Area according to Rule 10.58 (2) of the Regulations.

Blue field flags were placed at appropriate intervals along the wetland/upland border. Primary parameters evaluated in Bordering Vegetated Wetland (BVW) delineation vegetation and indicators of hydrology. Secondary factors included soils and best professional judgment. Banks of the impoundment, outlet, and an intermittent stream were delineated according to the first observable break in slope. Observed wetland hydrologic indicators, vegetation and soils are described in the following sections and within the Bordering Vegetated Wetland (BVW) data forms. Wetland resource areas within the vicinity of the site include the following: **Bordering Vegetated Wetlands, Land Under Waterbodies, Isolated Freshwater Wetland, Bank, 100-Foot Buffer Zone,** and **Bordering Land Subject to Flooding.**

WETLAND DESCRIPTIONS

Nagog Pond

The edges of the impoundment are defined in section 10.54 (2) of the Regulations as **Bank**. The banks of Nagog Pond in the vicinity of the dam were delineated in two flag series: flags P-1 to P-6 define the southern bank of the pond in the vicinity of the dam, and flags P-100 to P-108 define the northern bank. The delineated area begins in the location where the natural bank joins the concrete walls supporting the upstream side of the dam. According to section 10.02 (2)(b) of the Regulations, the bank has a 100-foot buffer zone. The edges of the pond are forested with a mix of evergreen and deciduous species, and also contain dense shrubs and climbing vines in some areas. Typical vegetation observed along the banks include, but are not necessarily limited to, the following species:

Common Name	Scientific Name	Indicator Status
Red Maple	*Acer rubrum*	FAC
Eastern Hemlock	*Tsuga canadensis*	FACU
White Pine	*Pinus strobus*	FACU
Red Oak	*Quercus rubra*	FACU-
Sweet Pepperbush	*Clethra alnifolia*	FAC+
Highbush Blueberry	*Vaccinium corymbosum*	FACW-
Green Briar	*Smilax rotundifolia*	FAC
Prickly Dewberry	*Rubus flagellaris*	FAC

Land Under Waterway

According to 10.56 (2) of the Regulations, land within Nagog Pond is classified as **Land Under Waterbodies**. Directly upstream of the dam, the pond bottom slopes gradually, and consists of a coarse sandy substrate with scattered rock. At the time of delineation, the area of the pond in the vicinity of the dam was mostly frozen and unvegetated, although the pond bottom is likely to support a community of aquatic vegetation during the growing season.

Nagog Brook

The edges of the outlet are defined in section 10.54 (2) of the Regulations as **Bank**. The banks in the vicinity of the dam were delineated in two flag series: series R-1 to R-18 defines the southern bank of the stream in the vicinity of the dam, and series R-100 to R-109 defines the northern bank. The delineated bank includes manmade and natural bank features. Placed stone supports the banks of the outlet directly downstream of the dam, while further downstream, the banks are gradually sloping and colonized by a mix of trees and shrubs.

Downstream of the dam, the stream bottom consists of a sandy, unvegetated substrate with scattered rock. During the delineation, the outlet passed rapid flow. Further downstream, the channel broadens into a slow-moving, natural channel with some shrub vegetation growing along its shallow edges. Typical vegetation observed along the banks include, but are not limited to, the following species:

Common Name	Scientific Name	Indicator Status
Red Maple	*Acer rubrum*	FAC
Eastern Hemlock	*Tsuga canadensis*	FACU
White Pine	*Pinus strobus*	FACU
Sweet Birch	*Betula lenta*	FACU
Witch Hazel	*Hamamelis virginiana*	FAC-
Tatarial Honeysuckle	*Lonicera tatarica*	FACU
Sweet Pepperbush	*Clethra alnifolia*	FAC+
Speckled Alder	*Alnus rugosa*	FACW+
Cinnamon Fern	*Osmunda cinnamomea*	FACW
Prickly Dewberry	*Rubus flagellaris*	FAC

Unnamed Stream

Flag series B-1 to B-12 and B-100 to B-114 define the edges of an **Intermittent Stream** (as defined in 10.04 of the Regulations) extending from the west end of the site into Nagog Brook. The stream enters the project site a short distance north of the Ozone Treatment Facility, extending along the riprap slope adjacent to the building before entering a pipe and crossing beneath a dirt path. The pipe discharges to an open area of emergent wetland vegetation located at the downstream right side of the dam. In this location the stream broadens into a braided channel that weaves around the hummocks of vegetation. The stream regains its defined character once it enters the forested area bordering the Nagog Brook outlet, and joins Nagog Brook between bank flags R-11 and R-12.

The substrate of the stream is variable, ranging from rock at its upper limits to deep organic muck in the slower flowing, braded portion. Vegetation within the stream channel includes, but is not necessarily limited to, Tussock Sedge (*Carex stricta*), Cattail (*Typha sp.*), Sensitive Fern (*Onoclea sensibilis*), and Common Rush (*Juncus effusus*).

Bordering Vegetated Wetlands

Four **Bordering Vegetated Wetlands** (section 10.55 (2) of the Regulations) were delineated within the project area, including the A series along the southern edge of the pond, the C and D series along either side of the intermittent stream, and the E series along the north edge of the outlet. According to section 10.02 (2)(b), each of these wetlands has a 100-foot buffer zone. Bordering Vegetated Wetland (BVW) data forms for each wetland area are attached. Each of the delineated BVW areas is described below.

Wetland A

Flag series A-1 to A-4 defines the edge of a narrow fringe of BVW located along the southern side of Nagog Pond, between bank flags P-2 and P-6. The wetland is colonized by a community of trees, shrubs, and emergent vegetation. The wetland appears to have a seasonally saturated hydrology, fed mainly by overland flow from the surrounding forested uplands, and receiving temporary overflow from the pond during storm events. Wetland vegetation observed included, but is not limited to, the following:

Common Name	Scientific Name	Indicator Status
Red Maple	*Acer rubrum*	FAC
White Pine	*Pinus strobus*	FACU
Sweet Birch	*Betula lenta*	FACU
Witch Hazel	*Hamamelis virginiana*	FAC-
Sweet Pepperbush	*Clethra alnifolia*	FAC+
Cinnamon Fern	*Osmunda cinnamomea*	FACW
American Wintergreen	*Pyrola Americana*	FAC

Wetland C

Flag series C-1 to C-9 defines the edge of a BVW located along the southeast edge of the B-series intermittent stream, at the toe of the riprap slope leading to the Ozone Treatment Facility. The wetland has a saturated to seasonally flooded hydrology, and is fed by the B-series intermittent stream and overland flow from the surrounding uplands. The vegetation community within the wetland is transitional, ranging from emergent vegetation at its upstream limit, to densely wooded closer to Nagog Brook. Wetland vegetation observed included, but is not limited to, the following:

Common Name	Scientific Name	Indicator Status
Red Maple	*Acer rubrum*	FAC
White Pine	*Pinus strobus*	FACU
American Beech	*Fagus grandifolia*	FACU
Witch Hazel	*Hamamelis virginiana*	FAC-
Speckled Alder	*Alnus rugosa*	FACW+
Sweet Pepperbush	*Clethra alnifolia*	FAC+
Cat Tail	*Typha sp.*	OBL
Tussock Sedge	*Carex stricta*	OBL
Common Rush	*Juncus effusus*	FACW+
Cinnamon Fern	*Osmunda cinnamomea*	FACW
Sensitive Fern	*Onoclea sensibilis*	FACW

Wetland D

Flag series D-1 to D-7 defines the edge of a BVW located along the northwest edge of the B-series intermittent stream, at the toe of the downstream dam slope. Like Wetland C, this wetland has a saturated to seasonally flooded hydrology, and is fed by the B-series intermittent stream and overland flow from the surrounding uplands. The wetland edge is located at the toe of the gravel path leading toward the spillway outlet. The wetland is densely colonized by emergent vegetation, and contains some shrubs and saplings along the wetland edges. Wetland vegetation observed included, but is not limited to, the following:

Common Name	Scientific Name	Indicator Status
Red Maple	*Acer rubrum*	FAC
White Pine	*Pinus strobus*	FACU
Speckled Alder	*Alnus rugosa*	FACW+
Sweet Pepperbush	*Clethra alnifolia*	FAC+
Cat Tail	*Typha sp.*	OBL
Tussock Sedge	*Carex stricta*	OBL
Common Rush	*Juncus effusus*	FACW+
Sensitive Fern	*Onoclea sensibilis*	FACW

Wetland E

Flag series E-1 to E-6 defines the edge of a fringe of BVW located along the northern side of Nagog Brook, between bank flags R-104 and R-109. The wetland is forested, with a dense understory of shrubs and emergent vegetation. The wetland appears to have a seasonally saturated to seasonally flooded hydrology, fed mainly by overland flow from the surrounding forested uplands, and receiving temporary overflow from the outlet during storm events. Wetland vegetation observed included, but is not limited to, the following:

Common Name	Scientific Name	Indicator Status
Red Maple	*Acer rubrum*	FAC
White Pine	*Pinus strobus*	FACU
Eastern Hemlock	*Tsuga canadensis*	FACU
Sweet Birch	*Betula lenta*	FACU
Speckled Alder	*Alnus rugosa*	FACW+
Witch Hazel	*Hamamelis virginiana*	FAC-

Sweet Pepperbush	*Clethra alnifolia*	FAC+
Cinnamon Fern	*Osmunda cinnamomea*	FACW
Prickly Dewberry	*Rubus flagellaris*	FAC

Isolated Vegetated Wetland

A small, isolated wet depression is located between the south bank of Nagog Pond and the B-series intermittent stream. At the time of delineation, the area held water to depths of up to 1 foot. Vegetation within the depression was limited to a few Highbush Blueberry shrubs, although it is likely to support a community of emergent vegetation during the growing season.

This area does not meet the state's definition of a jurisdictional wetland resource area. It does not meet the proper size criteria to be classified as Isolated Land Subject to Flooding. According to the Acton Wetlands Bylaw, all vegetated wetlands are under the jurisdiction of the Conservation Commission, and are given an associated 100-foot buffer zone regardless of size or connectivity to other wetlands.

Bordering Lands Subject to Flooding

According to the FEMA Flood Insurance Rate Map (FIRM) for Acton (Community No. 250176 0005C, revised January 6, 1988), an area of **Bordering Land Subject to Flooding** (defined under Rule 10.57 (2)(a) of the Regulations) encompasses narrow a stretch of land surrounding the upstream and downstream sides of the project area. Floodplain on the site is located within Zone AE, areas with 1% annual chance of flooding. Flood Elevations have been determined at 227 feet (NGVD) upstream of the dam, and 218 feet directly downstream.

LMH

Z:\Mass\10122.00\Reports\Wetland Documentation\Wetland Field Report.doc

DEP Bordering Vegetated Wetland (310 CMR 10.55) Delineation Field Data Form

Applicant: Town of Concord **Prepared by:** Pare Corporation **Project location:** Hazelnut Street, Acton **DEP File #:** None
L. Hastings

Check all that apply:
__ Vegetation alone presumed adequate to delineate BVW boundary: fill out section I only.
X Vegetation and other indicators of hydrology used to delineate BVW boundary: fill out Sections I and II.
__ Method other than dominance test used (attach additional information).

Section I. Observation Plot Number: 1 Transect Number: A (Wetland Station) 5'± D/G WF A-2 Date of Delineation: March 2, 2010

A. Sample Layer and Plant Species (by common/ scientific name)		**B. Percent Cover** (or basal area)	**C. Percent Dominance**	**D. Dominant Plant** (Yes or No)	**E. Wetland Indicator** Category *
Tree	Red Maple (*Acer rubrum*)	16-25 (20.5)	60	Y	FAC*
	Red Oak (*Quercus rubra*)	0-5 (3.0)	9	N	
	White Pine (*Pinus strobus*)	6-15 (10.5)	31	Y	FACU
	Total	34.0	100		
Sapling	Sweet Birch (*Betula lenta*)	6-15 (10.5)	44	Y	FACU
	Red Maple (*Acer rubrum*)	6-15 (10.5)	44	Y	FAC*
	White Pine (*Pinus strobus*)	0-5 (3.0)	13	N	
	Total	24.0	101**		
Shrub	Sweet Pepperbush (*Clethra alnifolia*)	51-75 (63.0)	95	Y	FAC+*
	Witch Hazel (*Hamamelis virginiana*)	0-5 (3.0)	5	N	
	Total	66.0	100		
Herb	American Wintergreen (*Pyrola americana*)	0-5 (3.0)	100	Y	FAC*
	Total	3.0	100		

****total does not equal 100 due to rounding**
*Use an asterisk to mark wetland indicator plants species listed in the Wetlands Protection Act (MGL c. 131, s. 40); plants in the genus Sphagnum; plants listed as FAC, FAC+, FACW-, FACW+, or OBL; or plants with physiological or morphological adaptations. If any plants are identified as wetland indicator plants due to physiological adaptations, describe the adaptation next to the asterisk.

Vegetation Conclusion:

Number of dominant wetland indicator plants: 4 Number of dominant non-wetland indicator plants: 2
Is the number of dominant wetland plants equal to or greater than the number of dominant non-wetland plants? YES NO
If vegetation alone is presumed adequate to delineate the BVW boundary, submit this form with the Request for Determination of Applicability or Notice of Intent.

Section II. Indicators of Hydrology

Hydric Soil Interpretation
1. Soil Survey

Is there a published soil survey for this site? [Yes] No
Title/Date: Soil Survey of Middlesex County (online at http://websoilsurvey.nrcs.usda.gov)

Map Number: N/A
Soil type mapped: Charlton-Hollis-Rock outcrop complex, 8 to 15 percent slopes

Hydric Soil Inclusions: None

Are field observations consistent with soil survey? [Yes] No

Remarks:

2. Soil Description

Horizon	Depth (in)	Matrix Color	Mottles Color
O	¼”-0”	7.5YR 2.5/2	
A	0”-4”	10YR 3/1	
B	4”-16+”	10YR4/3	2.5YR 3/3 10YR 3/1

Remarks:

3. Other:

Conclusion: Is soil hydric? [Yes] No

Other Indicators of Hydrology: (check all that apply and describe)

☐ Site inundated:

☐ Depth to free water in observation hole:

☒ Depth to soil saturation in observation hole: 12”

☐ Water Marks:

☐ Drift lines:

☐ Sediment deposits:

☐ Drainage patterns in BVW:

☐ Oxidized rhizospheres:

☐ Water-stained leaves:

☐ Recorded data (stream, lake, or tidal gauge; aerial photo; other):

☒ Other: Buttressed tree roots

Vegetation and Hydrology Conclusion

	Yes	No
Number of wetland indicator plants ≥ number of non-wetland indicator plants	☒	☐
Wetland hydrology present: hydric soil present	☒	☐
other indicators of hydrology present	☒	☐
Sample location is in a BVW	☒	☐

Submit this form with the Request for Determination of Applicability or Notice of Intent

DEP Bordering Vegetated Wetland (310 CMR 10.55) Delineation Field Data Form

Applicant: Town of Concord **Prepared by:** Pare Corporation **Project location:** Hazelnut Street, Acton **DEP File #:** None
L. Hastings

Check all that apply:
__ Vegetation alone presumed adequate to delineate BVW boundary: fill out section I only.
X Vegetation and other indicators of hydrology used to delineate BVW boundary: fill out Sections I and II.
__ Method other than dominance test used (attach additional information).

Section I. Observation Plot Number: 2 Transect Number: A (Upland Station) 2'± U/G WF A-2 Date of Delineation: March 2, 2010

A. Sample Layer and Plant Species (by common/ scientific name)		**B. Percent Cover** (or basal area)	**C. Percent Dominance**	**D. Dominant Plant** (Yes or No)	**E. Wetland Indicator** Category *
Tree	Red Maple (*Acer rubrum*)	6-15 (10.5)	13	N	
	Red Pine (*Pinus resinosa*)	16-25 (20.5)	25	Y	FACU
	White Pine (*Pinus strobus*)	26-50 (38.0)	46	Y	FACU
	Red Oak (*Quercus rubra*)	0-5 (3.0)	4	N	
	Sweet Birch (*Betula lenta*)	6-15 (10.5)	13	N	
	Total	82.5	101**		
Sapling	Sweet Birch (*Betula lenta*)	6-15 (10.5)	44	Y	FACU
	White Pine (*Pinus strobus*)	0-5 (3.0)	13	N	
	Red Maple (*Acer rubrum*)	6-15 (10.5)	44	Y	FAC*
	Total	24.0	101		
Shrub	Witch Hazel (*Hamamelis virginiana*)	6-15 (10.5)	34	Y	FAC-
	Sweet Pepperbush (*Clethra alnifolia*)	16-25 (20.5)	66	Y	FAC+*
	Total	31.0	100		
Herb	American Wintergreen (*Pyrola americana*)	6-15 (10.5)	100	Y	FAC*
	Total	10.5	100		

****total does not equal 100 due to rounding**
*Use an asterisk to mark wetland indicator plants species listed in the Wetlands Protection Act (MGL c. 131, s. 40); plants in the genus Sphagnum; plants listed as FAC, FAC+, FACW-, FACW+, or OBL; or plants with physiological or morphological adaptations. If any plants are identified as wetland indicator plants due to physiological adaptations, describe the adaptation next to the asterisk.

Vegetation Conclusion:

Number of dominant wetland indicator plants: 3 Number of dominant non-wetland indicator plants: 4
Is the number of dominant wetland plants equal to or greater than the number of dominant non-wetland plants? YES NO
If vegetation alone is presumed adequate to delineate the BVW boundary, submit this form with the Request for Determination of Applicability or Notice of Intent.

Section II. Indicators of Hydrology

Hydric Soil Interpretation
1. Soil Survey

Is there a published soil survey for this site? [Yes] No
Title/Date: Soil Survey of Middlesex County (online at http://websoilsurvey.nrcs.usda.gov)

Map Number: N/A
Soil type mapped: Charlton-Hollis-Rock outcrop complex, 8 to 15 percent slopes

Hydric Soil Inclusions: None

Are field observations consistent with soil survey? [Yes] No

Remarks:

2. Soil Description

Horizon	Depth (in)	Matrix Color	Mottles Color
O	½”-0”	10YR 2/1	
A	0”-2”	10YR 3/2	
B	2”-12+”	10YR 5/6	

Remarks:

3. Other:

Conclusion: Is soil hydric? Yes [No]

Other Indicators of Hydrology: (check all that apply and describe)

☐ Site inundated:

☐ Depth to free water in observation hole:

☐ Depth to soil saturation in observation hole:

☐ Water Marks:

☐ Drift lines:

☐ Sediment deposits:

☐ Drainage patterns in BVW: appears to be in channel among upland hummocks

☐ Oxidized rhizospheres:

☐ Water-stained leaves:

☐ Recorded data (stream, lake, or tidal gauge; aerial photo; other):

☐ Other:

Vegetation and Hydrology Conclusion

	Yes	No
Number of wetland indicator plants ≥ number of non-wetland indicator plants	☐	☒
Wetland hydrology present:		
hydric soil present	☐	☒
other indicators of hydrology present	☐	☒
Sample location is in a BVW	☐	☒

Submit this form with the Request for Determination of Applicability or Notice of Intent

DEP Bordering Vegetated Wetland (310 CMR 10.55) Delineation Field Data Form

Applicant: Town of Concord **Prepared by:** Pare Corporation **Project location:** Hazelnut Street, Acton **DEP File #:** None
L. Hastings

Check all that apply:
__ Vegetation alone presumed adequate to delineate BVW boundary: fill out section I only.
X Vegetation and other indicators of hydrology used to delineate BVW boundary: fill out Sections I and II.
__ Method other than dominance test used (attach additional information).

Section I. Observation Plot Number: 1 Transect Number: C (Wetland Station) 5'± D/G WF C-4 Date of Delineation: March 2, 2010

A. Sample Layer and Plant Species (by common/ scientific name)		**B. Percent Cover** (or basal area)	**C. Percent Dominance**	**D. Dominant Plant** (Yes or No)	**E. Wetland Indicator** Category *
Tree	White Pine (*Pinus strobus*)	6-15 (10.5)	50	Y	FACU
	Red Maple (*Acer rubrum*)	6-15 (10.5)	50	Y	FAC*
	Total	21.0	100		
Sapling	White Pine (*Pinus strobus*)	16-25 (20.5)	100	Y	FACU
	Total	20.5	100		
Shrub	Highbush Blueberry (*Vaccinium corymbosum*)	0-5 (3.0)	15	N	
	Sweet Pepperbush (*Clethra alnifolia*)	6-15 (10.5)	54	Y	FAC+*
	Witch Hazel (*Hamamelis virginiana*)	0-5 (3.0)	15	N	
	Red Raspberry (*Rubus idaeus*)	0-5 (3.0)	15	N	
	Total	19.5	99**		
Herb	Cinnamon Fern (*Osmunda cinnamomea*)	6-15 (10.5)	39	Y	FACW*
	Sensitive Fern (*Onoclea sensibilis*)	16-25 (20.5)	60	Y	FACW*
	Woolgrass (*Scirpus cyperinus*)	0-5 (3.0)	9	N	
	Total	34.0	100		

****total does not equal 100 due to rounding**
*Use an asterisk to mark wetland indicator plants species listed in the Wetlands Protection Act (MGL c. 131, s. 40); plants in the genus Sphagnum; plants listed as FAC, FAC+, FACW-, FACW+, or OBL; or plants with physiological or morphological adaptations. If any plants are identified as wetland indicator plants due to physiological adaptations, describe the adaptation next to the asterisk.

Vegetation Conclusion:

Number of dominant wetland indicator plants: 4 Number of dominant non-wetland indicator plants: 2
Is the number of dominant wetland plants equal to or greater than the number of dominant non-wetland plants? YES NO
If vegetation alone is presumed adequate to delineate the BVW boundary, submit this form with the Request for Determination of Applicability or Notice of Intent.

Section II. Indicators of Hydrology

Hydric Soil Interpretation
1. Soil Survey

Is there a published soil survey for this site? [Yes] No
Title/Date: Soil Survey of Middlesex County (online at http://websoilsurvey.nrcs.usda.gov)

Map Number: N/A
Soil type mapped: Whitman fine sandy loam, 0 to 5 percent slopes, extremely stony

Hydric Soil Inclusions: Whitman

Are field observations consistent with soil survey? [Yes] No

Remarks:

2. Soil Description

Horizon	Depth (in)	Matrix Color	Mottles Color
O	2”-0”	10YR 2/2	
A	0”-14”	10YR 3/2	

Remarks: Hit rock around 14”

3. Other:

Conclusion: Is soil hydric? [Yes] No

Other Indicators of Hydrology: (check all that apply and describe)

- ☐ Site inundated:
- ☒ Depth to free water in observation hole: 12”
- ☒ Depth to soil saturation in observation hole: 8”
- ☐ Water Marks:
- ☐ Drift lines:
- ☐ Sediment deposits:
- ☐ Drainage patterns in BVW:
- ☐ Oxidized rhizospheres:
- ☐ Water-stained leaves:
- ☐ Recorded data (stream, lake, or tidal gauge; aerial photo; other):
- ☐ Other:

Vegetation and Hydrology Conclusion

	Yes	No
Number of wetland indicator plants ≥ number of non-wetland indicator plants	☒	☐
Wetland hydrology present: hydric soil present	☒	☐
other indicators of hydrology present	☒	☐
Sample location is in a BVW	☒	☐

Submit this form with the Request for Determination of Applicability or Notice of Intent

DEP Bordering Vegetated Wetland (310 CMR 10.55) Delineation Field Data Form

Applicant: Town of Concord **Prepared by:** Pare Corporation **Project location:** Hazelnut Street, Acton **DEP File #:** None
L. Hastings

Check all that apply:
__ Vegetation alone presumed adequate to delineate BVW boundary: fill out section I only.
X Vegetation and other indicators of hydrology used to delineate BVW boundary: fill out Sections I and II.
__ Method other than dominance test used (attach additional information).

Section I. Observation Plot Number: 2 Transect Number: C (Upland Station) 5'± U/G WF C-4 Date of Delineation: March 2, 2010

A. Sample Layer and Plant Species (by common/ scientific name)		**B. Percent Cover** (or basal area)	**C. Percent Dominance**	**D. Dominant Plant** (Yes or No)	**E. Wetland Indicator** Category *
Tree	Sweet Birch (*Betula lenta*)	6-15 (10.5)	33	Y	FACU
	Red Maple (*Acer rubrum*)	6-15 (10.5)	33	Y	FAC*
	White Pine (*Pinus strobus*)	6-15 (10.5)	33	Y	FACU
	Total	31.5	99**		
Sapling	White Pine (*Pinus strobus*)	26-50 (38.0)	93	Y	FACU
	Red Maple (*Acer rubrum*)	0-5 (3.0)	7	N	
	Total	41.0	100		
Shrub	Highbush Blueberry (*Vaccinium corymbosum*)	0-5 (3.0)	22	Y	FACW-*
	Witch Hazel (*Hamamelis virginiana*)	6-15 (10.5)	78	Y	FAC-
	Total	13.5	100		
Herb	Prickly Dewberry (*Rubus flagellaris*)	0-5 (3.0)	100	Y	FAC*
	Total	3.0	100		

****total does not equal 100 due to rounding**
*Use an asterisk to mark wetland indicator plants species listed in the Wetlands Protection Act (MGL c. 131, s. 40); plants in the genus Sphagnum; plants listed as FAC, FAC+, FACW-, FACW+, or OBL; or plants with physiological or morphological adaptations. If any plants are identified as wetland indicator plants due to physiological adaptations, describe the adaptation next to the asterisk.

Vegetation Conclusion:

Number of dominant wetland indicator plants: 3 Number of dominant non-wetland indicator plants: 4
Is the number of dominant wetland plants equal to or greater than the number of dominant non-wetland plants? YES NO
If vegetation alone is presumed adequate to delineate the BVW boundary, submit this form with the Request for Determination of Applicability or Notice of Intent.

Section II. Indicators of Hydrology

Hydric Soil Interpretation
1. Soil Survey

Is there a published soil survey for this site? [Yes] No
Title/Date: Soil Survey of Middlesex County (online at http://websoilsurvey.nrcs.usda.gov)

Map Number: N/A
Soil type mapped: Whitman fine sandy loam, 0 to 5 percent slopes, extremely stony

Hydric Soil Inclusions: Whitman

Are field observations consistent with soil survey? [Yes] No

Remarks:

2. Soil Description

Horizon	Depth (in)	Matrix Color	Mottles Color
O	½”-0”	10YR 2/1	
A	0”-2”	10YR 2/1	
B	2”-12+”	10YR 4/3	

Remarks:

3. Other:

Conclusion: Is soil hydric? Yes [No]

Other Indicators of Hydrology: (check all that apply and describe)

☐ Site inundated:

☐ Depth to free water in observation hole:

☐ Depth to soil saturation in observation hole:

☐ Water Marks:

☐ Drift lines:

☐ Sediment deposits:

☐ Drainage patterns in BVW: appears to be in channel among upland hummocks

☐ Oxidized rhizospheres:

☐ Water-stained leaves:

☐ Recorded data (stream, lake, or tidal gauge; aerial photo; other):

☐ Other:

Vegetation and Hydrology Conclusion

	Yes	No
Number of wetland indicator plants ≥ number of non-wetland indicator plants	☐	☒
Wetland hydrology present: hydric soil present	☐	☒
other indicators of hydrology present	☐	☒
Sample location is in a BVW	☐	☒

Submit this form with the Request for Determination of Applicability or Notice of Intent

DEP Bordering Vegetated Wetland (310 CMR 10.55) Delineation Field Data Form

Applicant: Town of Concord **Prepared by:** Pare Corporation **Project location:** Hazelnut Street, Acton **DEP File #:** None
L. Hastings

Check all that apply:
__ Vegetation alone presumed adequate to delineate BVW boundary: fill out section I only.
X Vegetation and other indicators of hydrology used to delineate BVW boundary: fill out Sections I and II.
__ Method other than dominance test used (attach additional information).

Section I. Observation Plot Number: 1 Transect Number: D (Wetland Station) 5'± D/G WF D-3 Date of Delineation: March 2, 2010

A. Sample Layer and Plant Species (by common/ scientific name)		**B. Percent Cover** (or basal area)	**C. Percent Dominance**	**D. Dominant Plant** (Yes or No)	**E. Wetland Indicator** Category *
Tree	Sweet Birch (*Betula lenta*)	0-5 (3.0)	18	N	
	Red Maple (*Acer rubrum*)	0-5 (3.0)	18	N	
	White Pine (*Pinus strobus*)	6-15 (10.5)	64	Y	FACU
	Total	16.5	100		
Sapling	Sweet Birch (*Betula lenta*)	0-5 (3.0)	22	Y	FACU
	Red Maple (*Acer rubrum*)	6-15 (10.5)	78	Y	FAC*
	Total	13.5	100		
Shrub	Sweet Pepperbush (*Clethra alnifolia*)	16-25 (20.5)	66	Y	FAC+*
	Speckled Alder (*Alnus rugosa*)	6-15 (10.5)	34	Y	FACW+*
	Total	31.0	100		
Herb	Common Rush (*Juncus effusus*)	6-15 (10.5)	34	Y	FACW+*
	Peat Moss (*Sphagnum sp*)	16-25 (20.5)	66	Y	FACW*
	Total	31.0	100		

****total does not equal 100 due to rounding**
*Use an asterisk to mark wetland indicator plants species listed in the Wetlands Protection Act (MGL c. 131, s. 40); plants in the genus Sphagnum; plants listed as FAC, FAC+, FACW-, FACW+, or OBL; or plants with physiological or morphological adaptations. If any plants are identified as wetland indicator plants due to physiological adaptations, describe the adaptation next to the asterisk.

Vegetation Conclusion:

Number of dominant wetland indicator plants: 5 Number of dominant non-wetland indicator plants: 2
Is the number of dominant wetland plants equal to or greater than the number of dominant non-wetland plants? YES NO
If vegetation alone is presumed adequate to delineate the BVW boundary, submit this form with the Request for Determination of Applicability or Notice of Intent.

Section II. Indicators of Hydrology

Hydric Soil Interpretation
1. Soil Survey

Is there a published soil survey for this site? [Yes] No
Title/Date: Soil Survey of Middlesex County (online at http://websoilsurvey.nrcs.usda.gov)

Map Number: N/A
Soil type mapped: Whitman fine sandy loam, 0 to 5 percent slopes, extremely stony

Hydric Soil Inclusions: Whitman

Are field observations consistent with soil survey? [Yes] No

Remarks:

2. Soil Description

Horizon	Depth (in)	Matrix Color	Mottles Color
O	2”-0”	10YR 2/1	
A	0”- 4”	10YR 2/1	
B	4” - 16+”	10YR 4/2	10YR 4/6

Remarks: Hit rock around 14”

3. Other:

Conclusion: Is soil hydric? [Yes] No

Other Indicators of Hydrology: (check all that apply and describe)

- ☐ Site inundated:
- ☒ Depth to free water in observation hole: 12”
- ☒ Depth to soil saturation in observation hole: 8”
- ☐ Water Marks:
- ☐ Drift lines:
- ☐ Sediment deposits:
- ☐ Drainage patterns in BVW:
- ☐ Oxidized rhizospheres:
- ☐ Water-stained leaves:
- ☐ Recorded data (stream, lake, or tidal gauge; aerial photo; other):
- ☐ Other:

Vegetation and Hydrology Conclusion

	Yes	No
Number of wetland indicator plants ≥ number of non-wetland indicator plants	☒	☐
Wetland hydrology present: hydric soil present	☒	☐
other indicators of hydrology present	☒	☐
Sample location is in a BVW	☒	☐

Submit this form with the Request for Determination of Applicability or Notice of Intent

DEP Bordering Vegetated Wetland (310 CMR 10.55) Delineation Field Data Form

Applicant: Town of Concord **Prepared by:** Pare Corporation **Project location:** Hazelnut Street, Acton **DEP File #:** None
L. Hastings

Check all that apply:
__ Vegetation alone presumed adequate to delineate BVW boundary: fill out section I only.
X Vegetation and other indicators of hydrology used to delineate BVW boundary: fill out Sections I and II.
__ Method other than dominance test used (attach additional information).

Section I. Observation Plot Number: 2 Transect Number: D (Upland Station) 5'± U/G WF D-3 Date of Delineation: March 2, 2010

A. Sample Layer and Plant Species (by common/ scientific name)		**B. Percent Cover** (or basal area)	**C. Percent Dominance**	**D. Dominant Plant** (Yes or No)	**E. Wetland Indicator** Category *
Tree	Sweet Birch (*Betula lenta*)	6-15 (10.5)	28	Y	FACU
	Red Maple (*Acer rubrum*)	0-5 (3.0)	8	N	
	Red Oak (*Quercus rubra*)	0-5 (3.0)	8	N	
	White Pine (*Pinus strobus*)	16-25 (20.5)	55	Y	FACU
	Total	37.0	99**		
Sapling	White Pine (*Pinus strobus*)	0-5 (3.0)	18	N	
	Red Maple (*Acer rubrum*)	0-5 (3.0)	18	N	
	Sweet Birch (*Betula lenta*)	6-15 (10.5)	64	Y	FACU
	Total	16.5	100		
Shrub	Sweet Pepperbush (*Clethra alnifolia*)	6-15 (10.5)	100	Y	FAC+*
	Total	10.5	100		
Herb	Princess Pine (*Lycopodium obscurum*)	6-15 (10.5)	50	Y	FACU
	White Pine seedling (*Pinus strobus*)	6-15 (10.5)	50	Y	FACU
	Total	21.0	100		

****total does not equal 100 due to rounding**
*Use an asterisk to mark wetland indicator plants species listed in the Wetlands Protection Act (MGL c. 131, s. 40); plants in the genus Sphagnum; plants listed as FAC, FAC+, FACW-, FACW+, or OBL; or plants with physiological or morphological adaptations. If any plants are identified as wetland indicator plants due to physiological adaptations, describe the adaptation next to the asterisk.

Vegetation Conclusion:

Number of dominant wetland indicator plants: 1 Number of dominant non-wetland indicator plants: 5
Is the number of dominant wetland plants equal to or greater than the number of dominant non-wetland plants? YES NO
If vegetation alone is presumed adequate to delineate the BVW boundary, submit this form with the Request for Determination of Applicability or Notice of Intent.

Section II. Indicators of Hydrology

Hydric Soil Interpretation
1. Soil Survey

Is there a published soil survey for this site? [Yes] No
Title/Date: Soil Survey of Middlesex County (online at http://websoilsurvey.nrcs.usda.gov)

Map Number: N/A
Soil type mapped: Whitman fine sandy loam, 0 to 5 percent slopes, extremely stony

Hydric Soil Inclusions: Whitman

Are field observations consistent with soil survey? [Yes] No

Remarks:

2. Soil Description

Horizon	Depth (in)	Matrix Color	Mottles Color
O	1”-0”	10YR 2/1	
A	0”-2”	10YR 4/2	
B	2”-12+”	10YR 4/4	

Remarks:

3. Other:

Conclusion: Is soil hydric? Yes [No]

Other Indicators of Hydrology: (check all that apply and describe)

☐ Site inundated:

☐ Depth to free water in observation hole:

☐ Depth to soil saturation in observation hole:

☐ Water Marks:

☐ Drift lines:

☐ Sediment deposits:

☐ Drainage patterns in BVW: appears to be in channel among upland hummocks

☐ Oxidized rhizospheres:

☐ Water-stained leaves:

☐ Recorded data (stream, lake, or tidal gauge; aerial photo; other):

☐ Other:

Vegetation and Hydrology Conclusion

	Yes	No
Number of wetland indicator plants ≥ number of non-wetland indicator plants	☐	☒
Wetland hydrology present: hydric soil present	☐	☒
other indicators of hydrology present	☐	☒
Sample location is in a BVW	☐	☒

Submit this form with the Request for Determination of Applicability or Notice of Intent

DEP Bordering Vegetated Wetland (310 CMR 10.55) Delineation Field Data Form

Applicant: Town of Concord **Prepared by:** Pare Corporation **Project location:** Hazelnut Street, Acton **DEP File #:** None
L. Hastings

Check all that apply:
__ Vegetation alone presumed adequate to delineate BVW boundary: fill out section I only.
X Vegetation and other indicators of hydrology used to delineate BVW boundary: fill out Sections I and II.
__ Method other than dominance test used (attach additional information).

Section I. Observation Plot Number: 1 Transect Number: E (Wetland Station) 5'± D/G WF E-3 Date of Delineation: March 2, 2010

A. Sample Layer and Plant Species (by common/ scientific name)		**B. Percent Cover** (or basal area)	**C. Percent Dominance**	**D. Dominant Plant** (Yes or No)	**E. Wetland Indicator** Category *
Tree	Sweet Birch (*Betula lenta*)	6-15 (10.5)	34	Y	FACU
	White Pine (*Pinus strobus*)	16-25 (20.5)	66	Y	FACU
	Total	31.0	100		
Sapling	Sweet Birch (*Betula lenta*)	6-15 (10.5)	44	Y	FACU
	Red Maple (*Acer rubrum*)	6-15 (10.5)	44	Y	FAC*
	Bigtooth Aspen (*Populus grandidentata*)	0-5 (3.0)	13	N	
	Total	24.0	101**		
Shrub	Speckled Alder (*Alnus rugosa*)	16-25 (20.5)	66	Y	FACW+*
	Witch Hazel (*Hamamelis virginiana*)	6-15 (10.5)	34	Y	FAC-
	Total	31.0	100		
Herb	Prickly Dewberry (*Rubus flagellaris*)	0-5 (3.0)	22	Y	FAC*
	Cinnamon Fern (*Osmunda cinnamomea*)	6-15 (10.5)	78	Y	FACW*
	Total	13.5	100		

****total does not equal 100 due to rounding**
*Use an asterisk to mark wetland indicator plants species listed in the Wetlands Protection Act (MGL c. 131, s. 40); plants in the genus Sphagnum; plants listed as FAC, FAC+, FACW-, FACW+, or OBL; or plants with physiological or morphological adaptations. If any plants are identified as wetland indicator plants due to physiological adaptations, describe the adaptation next to the asterisk.

Vegetation Conclusion:

Number of dominant wetland indicator plants: 4 Number of dominant non-wetland indicator plants: 4
Is the number of dominant wetland plants equal to or greater than the number of dominant non-wetland plants? YES NO
If vegetation alone is presumed adequate to delineate the BVW boundary, submit this form with the Request for Determination of Applicability or Notice of Intent.

Section II. Indicators of Hydrology

Hydric Soil Interpretation
1. Soil Survey

Is there a published soil survey for this site? [Yes] No
Title/Date: Soil Survey of Middlesex County (online at http://websoilsurvey.nrcs.usda.gov)

Map Number: N/A
Soil type mapped: Whitman fine sandy loam, 0 to 5 percent slopes, extremely stony

Hydric Soil Inclusions: Whitman

Are field observations consistent with soil survey? [Yes] No

Remarks:

2. Soil Description

Horizon	Depth (in)	Matrix Color	Mottles Color
O	2”-0”	10YR 2/1	
A	0”-6”	10YR 2/1	
B	6”-16+”	10YR 5/2	10YR 2/1

Remarks:

3. Other:

Conclusion: Is soil hydric? [Yes] No

Other Indicators of Hydrology: (check all that apply and describe)

- ☐ Site inundated:
- ☐ Depth to free water in observation hole:
- ☐ Depth to soil saturation in observation hole:
- ☐ Water Marks:
- ☐ Drift lines:
- ☐ Sediment deposits:
- ☐ Drainage patterns in BVW:
- ☐ Oxidized rhizospheres:
- ☒ Water-stained leaves:
- ☐ Recorded data (stream, lake, or tidal gauge; aerial photo; other):
- ☒ Other: Buttressed tree roots

Vegetation and Hydrology Conclusion

	Yes	No
Number of wetland indicator plants ≥ number of non-wetland indicator plants	☒	☐
Wetland hydrology present: hydric soil present	☒	☐
other indicators of hydrology present	☒	☐
Sample location is in a BVW	☒	☐

Submit this form with the Request for Determination of Applicability or Notice of Intent

DEP Bordering Vegetated Wetland (310 CMR 10.55) Delineation Field Data Form

Applicant: Town of Concord **Prepared by:** Pare Corporation **Project location:** Hazelnut Street, Acton **DEP File #:** None
L. Hastings

Check all that apply:
__ Vegetation alone presumed adequate to delineate BVW boundary: fill out section I only.
X Vegetation and other indicators of hydrology used to delineate BVW boundary: fill out Sections I and II.
__ Method other than dominance test used (attach additional information).

Section I. Observation Plot Number: 2 Transect Number: E (Upland Station) 5'± U/G WF E-3 Date of Delineation: March 2, 2010

A. Sample Layer and Plant Species (by common/ scientific name)		**B. Percent Cover** (or basal area)	**C. Percent Dominance**	**D. Dominant Plant** (Yes or No)	**E. Wetland Indicator** Category *
Tree	Sweet Birch (*Betula lenta*)	6-15 (10.5)	18	N	
	Eastern Hemlock (*Tsuga canadensis*)	6-15 (10.5)	18	N	
	White Pine (*Pinus strobus*)	26-50 (38.0)	64	Y	FACU
	Total	59.0	100		
Sapling	Quaking Aspen (*Populus tremuloides*)	6-15 (10.5)	44	Y	FACU
	Red Maple (*Acer rubrum*)	0-5 (3.0)	13	N	
	Sweet Birch (*Betula lenta*)	6-15 (10.5)	44	Y	FACU
	Total	24.0	101**		
Shrub	Witch Hazel (*Hamamelis virginiana*)	6-15 (10.5)	100	Y	FAC-
	Total	10.5	100		
Herb	Prickly Dewberry (*Rubus flagellaris*)	0-5 (3.0)	100	Y	FAC*
	Total	3.0	100		

****total does not equal 100 due to rounding**
*Use an asterisk to mark wetland indicator plants species listed in the Wetlands Protection Act (MGL c. 131, s. 40); plants in the genus Sphagnum; plants listed as FAC, FAC+, FACW-, FACW+, or OBL; or plants with physiological or morphological adaptations. If any plants are identified as wetland indicator plants due to physiological adaptations, describe the adaptation next to the asterisk.

Vegetation Conclusion:

Number of dominant wetland indicator plants: 1 Number of dominant non-wetland indicator plants: 4
Is the number of dominant wetland plants equal to or greater than the number of dominant non-wetland plants? YES NO
If vegetation alone is presumed adequate to delineate the BVW boundary, submit this form with the Request for Determination of Applicability or Notice of Intent.

Section II. Indicators of Hydrology

Hydric Soil Interpretation
1. Soil Survey

Is there a published soil survey for this site? [Yes] No
Title/Date: Soil Survey of Middlesex County (online at http://websoilsurvey.nrcs.usda.gov)

Map Number: N/A
Soil type mapped: Whitman fine sandy loam, 0 to 5 percent slopes, extremely stony

Hydric Soil Inclusions: Whitman

Are field observations consistent with soil survey? [Yes] No

Remarks:

2. Soil Description

Horizon	Depth (in)	Matrix Color	Mottles Color
O	2”-0”	10YR 3/1	
A	0”-4”	10YR 3/1	
B	4”-12+”	10YR 4/2	

Remarks:

3. Other:

Conclusion: Is soil hydric? Yes [No]

Other Indicators of Hydrology: (check all that apply and describe)

☐ Site inundated:

☐ Depth to free water in observation hole:

☐ Depth to soil saturation in observation hole:

☐ Water Marks:

☐ Drift lines:

☐ Sediment deposits:

☐ Drainage patterns in BVW: appears to be in channel among upland hummocks

☐ Oxidized rhizospheres:

☐ Water-stained leaves:

☐ Recorded data (stream, lake, or tidal gauge; aerial photo; other):

☐ Other:

Vegetation and Hydrology Conclusion

	Yes	No
Number of wetland indicator plants ≥ number of non-wetland indicator plants	☐	☒
Wetland hydrology present: hydric soil present	☐	☒
other indicators of hydrology present	☐	☒
Sample location is in a BVW	☐	☒

Submit this form with the Request for Determination of Applicability or Notice of Intent

Photo 1: Upstream view of Nagog Pond Dam from right side

Photo 2: Downstream view of Nagog Pond Dam from right side

Photo 3: Downstream view of Nagog Pond Dam from left side

Photo 4: Spillway and deteriorated concrete wall

Photo 5: View of outlet and footbridge directly downstream from dam

Photo 6: Wetland and intermittent stream bordering the right side of the outlet

6. Project Plans

ISSUED DRAFT FOR PERMITS 01.31.12
NOT FOR CONSTRUCTION
HALF SIZED

Prepared for The:

TOWN OF CONCORD

NAGOG POND DAM REPAIRS

MA00129 / 4-9-2-5

ACTON, MASSACHUSETTS

JANUARY 2012

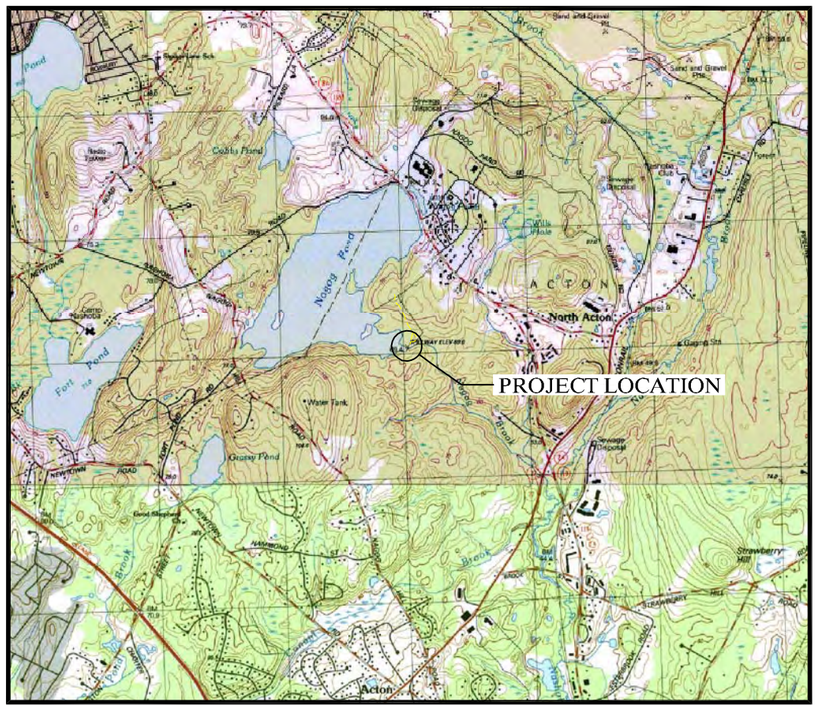

LOCUS PLAN
SCALE: 1" = 2000'

Drawing Index

0 COVER SHEET

1 NOTES AND LEGEND

2 EXISTING SITE PLAN, SECTIONS, AND PROFILE

3 DAM IMPROVEMENTS PLAN AND SECTIONS

4 STRUCTURAL NOTES AND DETAILS

5 MISCELLANEOUS DETAILS

6 SPILLWAY REPAIR PLAN

7 SITE ACCESS AND CONSTRUCTION STAGING PLAN

8 PIPING IMPROVEMENTS

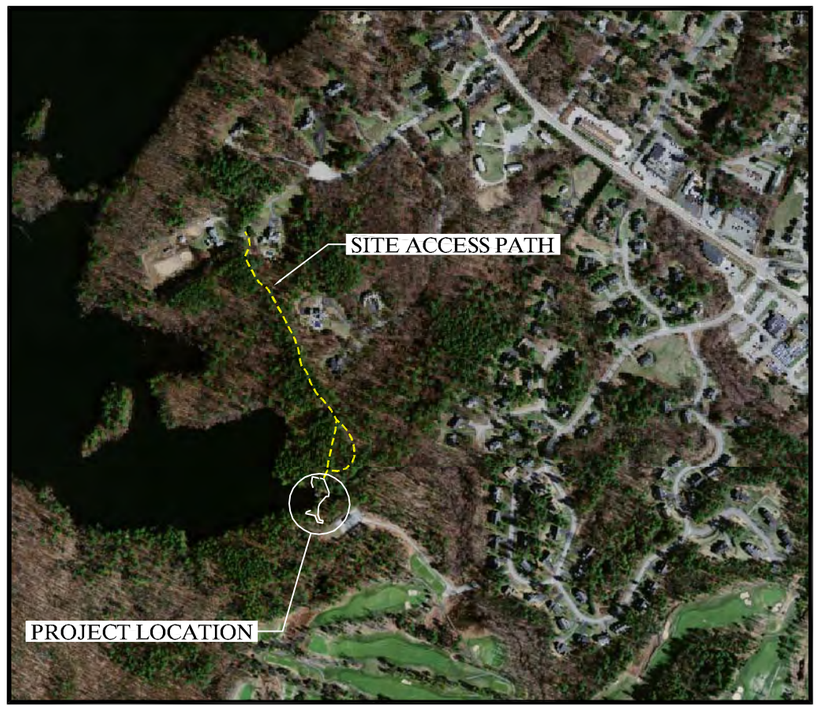

AERIAL PLAN
SCALE: 1" = 400'

Prepared by:

PARE CORPORATION

Foxboro, Massachusetts

PARE CORPORATION

Z:\JOBS\10 Jobs\10122.01 Nagog Pond Dam - Design & Construction Phase\DWGS\000 - Cover Sheet.dwg

GENERAL NOTES:

1. FOR THE PURPOSE OF THIS PROJECT

   OWNER – TOWN OF CONCORD, 133 KEYES ROAD, CONCORD, MA 01742
   ENGINEER – PARE CORPORATION, 10 LINCOLN ROAD, SUITE 103, FOXBORO, MA 02035

2. ALL CONSTRUCTION INDICATED ON THESE PLANS SHALL BE PERFORMED IN ACCORDANCE WITH THE LATEST EDITION OF THE MASSACHUSETTS STATE BUILDING CODE, THE SPECIFICATIONS INCLUDED IN THIS CONTRACT, AND APPLICABLE PORTIONS OF THE STATE OF MASSACHUSETTS GENERAL LAWS INCLUDING CHAPTERS 42–17.1, 42–17.6, 42–35, AND 46–19. THESE PLANS ARE INCOMPLETE UNLESS ACCOMPANIED BY THE SPECIFICATIONS INCLUDED IN THE CONTRACT DOCUMENTS.

3. THE BASE PLAN WAS DEVELOPED BASED UPON TOPOGRAPHIC AND BATHYMETRIC SURVEYS PERFORMED BY HERITAGE DESIGN GROUP IN MARCH 2010. ANY DISCREPANCIES ON THESE PLANS WITH REGARD TO DIMENSIONS OR CONDITIONS SHALL BE BROUGHT TO THE ATTENTION OF THE ENGINEER BEFORE PROCEEDING WITH THE AFFECTED PORTION OF WORK.

4. THE CONTRACTOR SHALL BE RESPONSIBLE FOR VERIFYING ALL DIMENSIONS. PLANS SHALL NOT BE SCALED FOR DIMENSIONS.

5. CONSTRUCTION SHALL BE MADE FROM APPROVED SHOP DRAWINGS ONLY.

6. NOTES, TYPICAL DETAILS AND SCHEDULES APPLY TO ALL WORK UNLESS OTHERWISE NOTED. FOR CONDITIONS NOT SPECIFICALLY SHOWN, PROVIDE DETAILS OF SIMILAR NATURE. VERIFY APPLICABILITY BY SUBMITTING SHOP DRAWINGS FOR REVIEW.

7. INFORMATION REGARDING THE LOCATION OF SURROUNDING STRUCTURES, UTILITIES, AND THE AS–BUILT CONFIGURATION AND CONDITION OF THE EXISTING DAM AND SPILLWAY IS FURNISHED SOLELY FOR THE CONVENIENCE OF THE CONTRACTOR AND SHALL BE FIELD VERIFIED. THE CONTRACTOR SHALL CONDUCT ITS OWN INDEPENDENT EXAMINATION OF SITE CONDITIONS FOR THE PURPOSE OF BIDDING, FABRICATION, AND CONSTRUCTION ASSOCIATED WITH THE PROJECT. ANY RELIANCE UPON INFORMATION MADE AVAILABLE BY THE OWNER OR THE ENGINEER SHALL BE AT THE CONTRACTOR'S RISK.

8. THE VERTICAL DATUM FOR THE PROJECT IS NAVD 88. THE HORIZONTAL DATUM IS ASSUMED. THE CONTRACTOR SHALL ESTABLISH HORIZONTAL AND VERTICAL CONTROL AS REQUIRED TO ENABLE COMPLETION OF THE WORK. ELEVATION REFERENCE NAVD 1988 BASED UPON A MENEL RIVET ELEVATION 226.93 FEET LOCATED ON THE DAM CREST 5 FEET LEFT OF THE GATEHOUSE AT THE UPSTREAM LEFT CORNER OF THE CONCRETE (MHD STATION ID 68–D16 / POINT ID 10169).

9. GATE HOUSE DETAILS AND BELOW GRADE GEOMETRY BASED UPON A DRAWING TITLED "GATE HOUSE IN DAM AT OUTLET AT NAGOG POND" PREPARED BY METCALF AND EDDY CONSULTING ENGINEERS OF BOSTON, MA DATED SEPTEMBER 30, 1909

10. THE CONTRACTOR SHALL BE RESPONSIBLE FOR MAINTAINING AND REGULATING FLOWS.

11. THE CONTRACTOR SHALL BE RESPONSIBLE FOR DISPOSAL OF ALL PROJECT DEMOLITION AND EXCESS MATERIAL IN ACCORDANCE WITH MASSACHUSETTS, LOCAL, AND FEDERAL LAWS.

12. CONTRACTOR SHALL BE RESPONSIBLE FOR ALL DAMAGE TO ADJACENT STRUCTURES AND UTILITIES AT NO ADDITIONAL COST TO THE OWNER.

13. THE CONTRACTOR SHALL FOLLOW ALL OSHA AND OTHER APPLICABLE FEDERAL, STATE, AND LOCAL STANDARDS FOR ALL PROJECT COMPONENTS AND ACTIVITIES. THE CONTRACTOR SHALL BE SOLELY RESPONSIBLE FOR ALL SITE SAFETY PROCEDURES AND PRACTICES REGARDLESS OF THE PRESENCE OF THE OWNER OR ENGINEER.

14. ALL CONSTRUCTION ACTIVITIES SHALL BE CONFINED TO THE LIMITS OF WORK DEFINED HEREIN.

15. WHERE REFERENCE IS MADE TO ANY STANDARD SPECIFICATION IT SHALL MEAN THE MOST RECENT SPECIFICATION, CODE, STANDARD, OR INTERIM SPECIFICATIONS OF THE ORGANIZATION REFERRED TO AND SHALL BE CONSIDERED A PART OF THESE CONTRACT DOCUMENTS TO THE EXTENT INDICATED. IN CASE OF CONFLICT, THE MORE RIGID REQUIREMENTS AND CODES SHALL GOVERN. THESE CODES INCLUDE, BUT ARE NOT LIMITED TO: AMERICAN SOCIETY FOR TESTING AND MATERIALS (ASTM) AND AMERICAN CONCRETE INSTITUTE (ACI).

16. ALL BACKFILL SHALL BE OF APPROVED MATERIALS PLACED IN 12–INCH MAXIMUM LOOSE LIFTS AND COMPACTED TO NOT LESS THAN 98 PERCENT OF THE MAXIMUM DRY DENSITY AS DETERMINED BY THE MODIFIED PROCTOR TEST. SEE SPECIFICATION SECTION 02200 FOR ADDITIONAL INFORMATION.

17. CONTRACTOR WILL BE REQUIRED TO SUBMIT A CONSTRUCTION SCHEDULE TO THE OWNER WITHIN 5 DAYS OF THE NOTICE OF AWARD.

18. CONTRACTOR SHALL STAGE ALL EQUIPMENT IN THE DESIGNATED STAGING AREA. ALL GREASING AND REFUELING ACTIVITIES SHALL OCCUR IN THE STAGING AREA.

19. UPON COMPLETION OF THE PROJECT, CONTRACTOR IS TO PROVIDE TWO AS–BUILT PLAN SETS TO THE OWNER DEPICTING ANY FIELD CHANGES OF DIMENSION OR DETAIL, LOCATION OF UNDERGROUND STRUCTURES AND/OR UTILITIES, CONSTRUCTION DEVIATIONS, CHANGES DUE TO FIELD OR CHANGE ORDER, AND DETAILS NOT ON THE ORIGINAL DRAWINGS.

20. NO WORK OR DISCHARGES, OTHER THAN THAT SHOWN, SHALL BE PERFORMED WITHIN WETLANDS WITHOUT FIRST RECEIVING PROPER PERMITS FROM THE REGULATORY AGENCIES. CONTRACTOR SHALL BE RESPONSIBLE FOR REMOVING, RESTORING AND REPAIRING ALL DAMAGE AS A RESULT OF UNAUTHORIZED WORK OR DISCHARGES TO THE WETLAND AREA AT NO ADDITIONAL COST TO THE OWNER.

21. UPON COMPLETION OF THE WORK ALL DISTURBED AREAS SHALL BE DRESSED AND SEEDED WITH A SLOPE MIX IN ACCORDANCE WITH M6.03 OF THE MASSACHUSETTS HIGHWAY DEPARTMENT (MHD/MASSDOT) STANDARD SPECIFICATIONS AND MAINTAINED IN ACCORDANCE WITH THE PROJECT SPECIFICATIONS.

22. CONTRACTOR WILL BE REQUIRED TO ATTEND WEEKLY PROGRESS MEETINGS AS REQUESTED BY THE OWNER.

DIVERSION NOTES:

1. THE CONTRACTOR SHALL BE RESPONSIBLE FOR REGULATING THE LEVEL OF THE IMPOUNDMENT THROUGHOUT THE DURATION OF THE WORK. CONTRACTOR SHALL MAINTAIN BASEFLOW WHEN THE LEVEL OF THE IMPOUNDMENT IS ABOVE EL. 225.6'. BASEFLOW RATE SHALL MIMIC NORMAL DISCHARGES THROUGH THE SPILLWAY. IF THE LEVEL OF THE IMPOUNDMENT FALLS TO BELOW THE SPILLWAY CREST DUE TO FACTORS BEYOND THE CONTROL OF THE CONTRACTOR, NO BASEFLOW DISCHARGES ARE REQUIRED.

2. CONTRACTOR SHALL MONITOR WEATHER PATTERNS AND IMPLEMENT NECESSARY MEASURES TO MAINTAIN THE SPECIFIED IMPOUNDMENT AREA, LIMIT UPSTREAM FLOODING, AND PROTECT THE WORK. INCREASES IN DISCHARGES THROUGH THE SPILLWAY SHALL BE PERFORMED IN A CONTROLLED MANNER SUCH THAT FLOODING WITHIN THE DOWNSTREAM AREAS DOES NOT OCCUR.

3. THE CONTRACTOR SHALL ESTABLISH TEMPORARY COFFERDAMS AS NECESSARY TO PROTECT THE WORK THROUGHOUT CONSTRUCTION. SEE SPECIFICATION SECTION 02400 FOR ADDITIONAL REQUIREMENTS.

4. THE CONTRACTOR SHALL PROVIDE TEMPORARY COFFERDAMS WITHIN THE UPSTREAM AREA AND PROVIDE PUMPS OR OTHER MEANS OF DEWATERING AS NECESSARY TO FACILITATE CONSTRUCTION IN THE DRY. EARTHEN COFFERDAMS OR DISCHARGE OF OTHER FILLS WHICH CANNOT BE REMOVED IN THEIR ENTIRETY SHALL NOT BE PERMITTED. USE OF STEEL FRAME AND TARP TYPE COFFERDAMS WILL NOT BE APPROVED BY THE OWNER.

5. ANY NECESSARY DIVERSIONS SHALL BE APPROVED BY THE OWNER AND ENGINEER PRIOR TO INSTALLATION. ALL DIVERSIONS SHALL BE INSTALLED AND REMOVED IN THEIR ENTIRETY AT NO ADDITIONAL COST TO THE OWNER.

6. CONTRACTOR SHALL MAINTAIN A BASE FLOW DURING THE TIME PERIOD IN WHICH THE RESERVOIR IS AT ELEVATIONS ABOVE EL.225.58.

EROSION AND SEDIMENT NOTES:

1. CONTRACTOR SHALL INSTALL AND MAINTAIN HAYBALES AND SILT FENCE AS INDICATED IN THE CONTRACT DOCUMENTS.

2. CONTRACTOR SHALL LIMIT STOCKPILE OF MATERIALS TO THE INDICATED STAGING AREAS. ALL STOCKPILED MATERIAL SHALL BE SURROUNDED BY HAYBALES AND SILT FENCE.

3. NO SEDIMENT SHALL ENTER WATERS OF THE STATE DUE TO WATER BYPASS OR DIVERSION. ANY WATER DISCHARGED DOWNSTREAM SHALL NOT CAUSE EROSION.

LOAM AND SEED NOTES:

1. CONTRACTOR SHALL APPLY FERTILIZER AND LOAM TO PREPARE TOPSOIL SURFACE AT THE RATES INDICATED IN THE PROJECT SPECIFICATIONS.

2. CONTRACTOR SHALL SEED ENTIRE SLOPE AND DISTURBED AREAS AS INDICATED IN THE PROJECT SPECIFICATIONS.

3. CONTRACTOR SHALL MULCH ENTIRE SEEDED AREA WITH STRAW MULCH.

4. CONTRACTOR SHALL INSTALL JUTE MESH OVER THE ENTIRE SEEDED AREA IN ACCORDANCE WITH MANUFACTURER'S RECOMMENDATIONS FOR OVERLAPPING, ANCHORING, AND DIRECTION OF PLACEMENT.

5. CONTRACTOR SHALL BE RESPONSIBLE FOR MAINTAINING SEEDED AREA THROUGH ONE GROWING SEASON. MAINTENANCE INCLUDES MOWING, WATERING, AND RESEEDING AS REQUIRED TO DEVELOP A SATISFACTORY STAND OF HEALTHY GRASS AS DEFINED IN THE PROJECT SPECIFICATIONS (SECTION 02900: LANDSCAPING).

TREE REMOVAL NOTES:

1. CONTRACTOR SHALL REMOVE AND DISPOSE OF ALL TREES, STUMPS, SHRUBS, AND OTHER VEGETATION AND ASSOCIATED ROOT SYSTEMS FROM THE ENTIRE DAM AND AS INDICATED ON THE DRAWINGS AND IN THE CONTRACT SPECIFICATIONS. CONTRACTOR SHALL PROPERLY BACKFILL THE RESULTING EXCAVATION WITH COMPACTED GRANULAR FILL IN ACCORDANCE WITH THE CONTRACT SPECIFICATIONS.

2. CONTRACTOR SHALL CUT, REMOVE AND DISPOSE ALL TREES IDENTIFIED FOR REMOVAL.

3. ALL DISPOSAL SHALL BE PERFORMED IN ACCORDANCE WITH LOCAL, STATE AND FEDERAL REQUIREMENTS. NO ONSITE BURNING OR DISPOSAL WILL BE ALLOWED.

CONSTRUCTION SEQUENCE:

THE FOLLOWING SEQUENCE IS INTENDED TO BE GENERAL IN NATURE. ALTHOUGH IT IS LIKELY THAT SOME OF THE WORK ITEMS WILL OVERLAP, CONSTRUCTION SEQUENCES FOR THE VARIOUS PROJECT COMPONENTS ARE DESCRIBED SEPARATELY AND MAY NOT NECESSARILY PROCEED IN CONSECUTIVE ORDER. ALL WORK SHALL BE PERFORMED IN ACCORDANCE WITH THE PROJECT PLANS AND SPECIFICATIONS AND CONDITIONS OF APPROVED PERMITS.

1. INSTALL EROSION AND SEDIMENT CONTROL DEVICES INCLUDING STRAW BALES AND SILT FENCE

2. INSTALL PHASE I COFFERDAM; COMPLETE PHASE I WORK:
   a. EXCAVATE ALONG THE UPSTREAM SIDE OF THE DAM LEFT OF THE GATEHOUSE AND THE DOWNSTREAM SIDE LEFT OF THE LOW LEVEL OUTLET CHANNEL TO SOUND CONCRETE. (APPROXIMATED NEAR 4–FEET); REMOVE ACCUMULATED SEDIMENT AND DEBRIS FROM THE LOW LEVEL OUTLET APPROACH CHANNEL
   b. REMOVE AND DISPOSE EXISTING GATE
   c. CHIP AND REMOVE DETERIORATED CONCRETE TO SOUND CONCRETE
   d. FORM AND PLACE APPROPRIATE CONCRETE REPAIR
   e. INSTALL NEW LOW LEVEL OUTLET GATE; STABILIZE APPROACH CHANNEL.
   f. FLOOD COFFERDAM; REMOVE COFFERDAM TO NEAR NORMAL POOL ELEVATION TO ALLOW TO ACT AS AN OVERFLOW WEIR.

3. INSTALL PHASE II COFFERDAM; COMPLETE PHASE II WORK:
   a. INSTALL TEMPORARY PIPING AND ACCESS ACROSS OUTLET CHANNEL; DIVERT FLOW THROUGH THE LOW LEVEL OUTLET
   b. EXCAVATE ALONG THE UPSTREAM SIDE OF THE DAM RIGHT OF THE GATEHOUSE AND THE DOWNSTREAM SIDE RIGHT OF THE GATEHOUSE TO SOUND CONCRETE (APPROXIMATED NEAR 4–FEET)
   c. REPLACE THE CULVERT BENEATH THE FOOTPATH
   d. CHIP AND REMOVE DETERIORATED CONCRETE TO SOUND CONCRETE
   e. FORM AND PLACE APPROPRIATE CONCRETE REPAIR; REPLACE EXCAVATED SOILS
   f. RECONSTRUCT SPILLWAY CONTROL SECTIONS
   g. INSTALL PIPING IMPROVEMENTS INCLUDING 1" LINE, ELECTRIC LINE, AND NEW 16" LINE TO EXTENTS PRACTICAL WITHOUT IMPACTING ACTIVE LINES AND EXISTING STREAM CHANNEL
   h. INSTALL DOWNSTREAM BUTTRESS AND OVER WASH PROTECTION
   i. CONSTRUCT REALIGNED SPILLWAY CHANNEL
   j. REMOVE THE COFFERDAM IN ITS ENTIRETY; RESTORE FLOW TO SPILLWAY CHANNEL

4. RESTORE PHASE I COFFERDAM; COMPLETE PHASE III WORK:
   a. COMPLETE CONCRETE REPAIRS ALONG THE DOWNSTREAM FACE OF THE DAM.
   b. COMPLETE MODIFICATIONS TO THE GRAVITY LINE CONFIGURATION.
   c. REMOVE TEMPORARY PIPING AND ACCESS WAY; INSTALL LOW LEVEL OUTLET CULVERT, SCOUR APRON, AND HEADWALL; BACKFILL TO PROPOSED LINES
   d. INSTALL NEW 16" LINE ACROSS DOWNSTREAM CHANNEL. COMPLETE CONNECTIONS TO EXISTING SYSTEM.
   e. INSTALL DOWNSTREAM BUTTRESS AND OVER WASH PROTECTION
   f. COMPLETE GATEHOUSE REPAIRS/GATE REPLACEMENTS
   g. REMOVE THE COFFERDAM IN ITS ENTIRETY

5. LOAM AND SEED THE DOWNSTREAM AREAS AND OTHER AREAS DISTURBED BY CONSTRUCTION ACTIVITIES; RESTORE STAGING AREAS.

6. RESTORE ALL AREAS OF THE SITE TO PRECONSTRUCTION CONDITIONS AND DEMOBILIZE

LEGEND

EXISTING		PROPOSED
	TREELINE	
5'	CONTOUR 1'	5'
5'	CONTOUR 5'	5'
	SILT FENCE	
	EDGE OF WATER	
	PROPERTY LINE	
	COFFERDAM	
	100 YEAR FLOOD PLAIN	
	100 FOOT WETLAND BUFFER ZONE	
	100 FOOT RIVERFRONT AREA	
	200 FOOT RIVERFRONT AREA	
	TREE TO BE CUT; ROOTS GRUBBED	
12"	EVERGREEN TREE AND DIAMETER	
12"	DECIDUOUS TREE AND DIAMETER	
WF1234	WETLAND FLAGS	
B10–#	BORING COMPLETED BY NEW HAMPSHIRE BORING OF BROCKTON, MASSACHUSETTS BETWEEN MARCH 8 AND 9, 2010. BORINGS OBSERVED BY PARE PERSONNEL.	
P–#	PROBE COMPLETED BY PARE PERSONNEL ON MARCH 9, 2010	
WF P3	WETLAND FLAG BASED UPON DELINEATION COMPLETED BY PARE ON MARCH 2, 2010.	

ABBREVIATIONS

HAY	HAY BALES	SILT	SILT FENCE
R&D	REMOVE & DISPOSE	LOD	LIMIT OF DISTURBANCE
TB	TURBIDITY BARRIER		

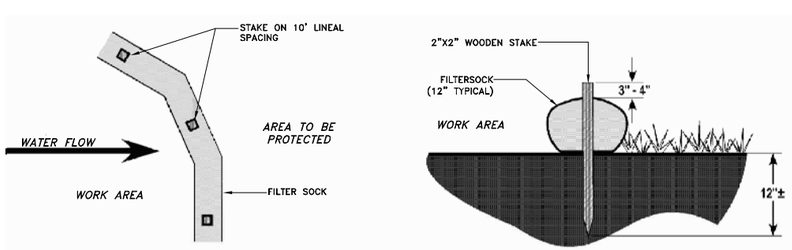

FILTERSOCK NOTES
1. COMPOST / SOIL / ROCK / SEED FILL TO MEET APPLICATION REQUIREMENTS
2. COMPOST MATERIAL TO BE REMOVED OR DISPERSED ON SITE AS DETERMINED BY ENGINEER.

FILTERSOCK DETAIL
NOT TO SCALE

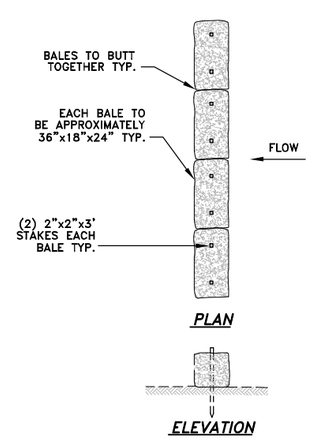

HAY BALE DETAIL
NOT TO SCALE

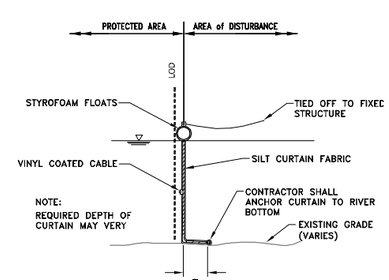

TYPICAL TURBIDITY BARRIER
NOT TO SCALE

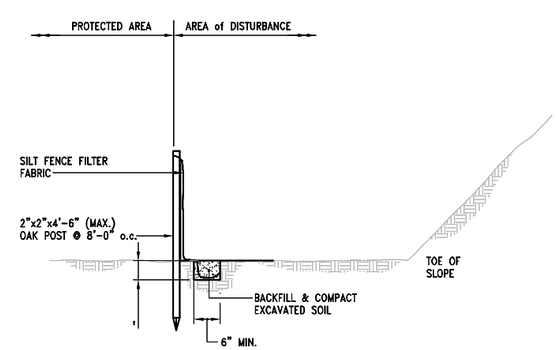

NOTE:
SILT FENCE FABRIC SHALL NOT BE SLIT. STRAW BALE POST SHALL BE DRIVEN THROUGH SILT FENCE FABRIC.

SILT FENCE DETAIL
NOT TO SCALE

HALF SIZED
ISSUED FOR PERMITS 01-31-12
DRAFT - NOT FOR CONSTRUCTION

PARE
PARE CORPORATION
ENGINEERS - SCIENTISTS - PLANNERS
10 LINCOLN ROAD, SUITE 103
FOXBORO, MA 02035
508-543-1755

SCALE ADJUSTMENT GUIDE
0" 1"
BAR IS ONE INCH ON ORIGINAL DRAWING.

NAGOG POND DAM REPAIRS
MA00129 / 4-9-2-5
ACTON, MASSACHUSETTS
TOWN OF CONCORD

REVISIONS:

PROJECT NO.:	10122.01
DATE:	JANUARY 2012
SCALE:	AS NOTED
DESIGNED BY:	KMC / ARO
CHECKED BY:	ARO
DRAWN BY:	JHG / JDB
APPROVED BY:	JMB

GENERAL NOTES AND LEGEND

SHEET NO.: 1

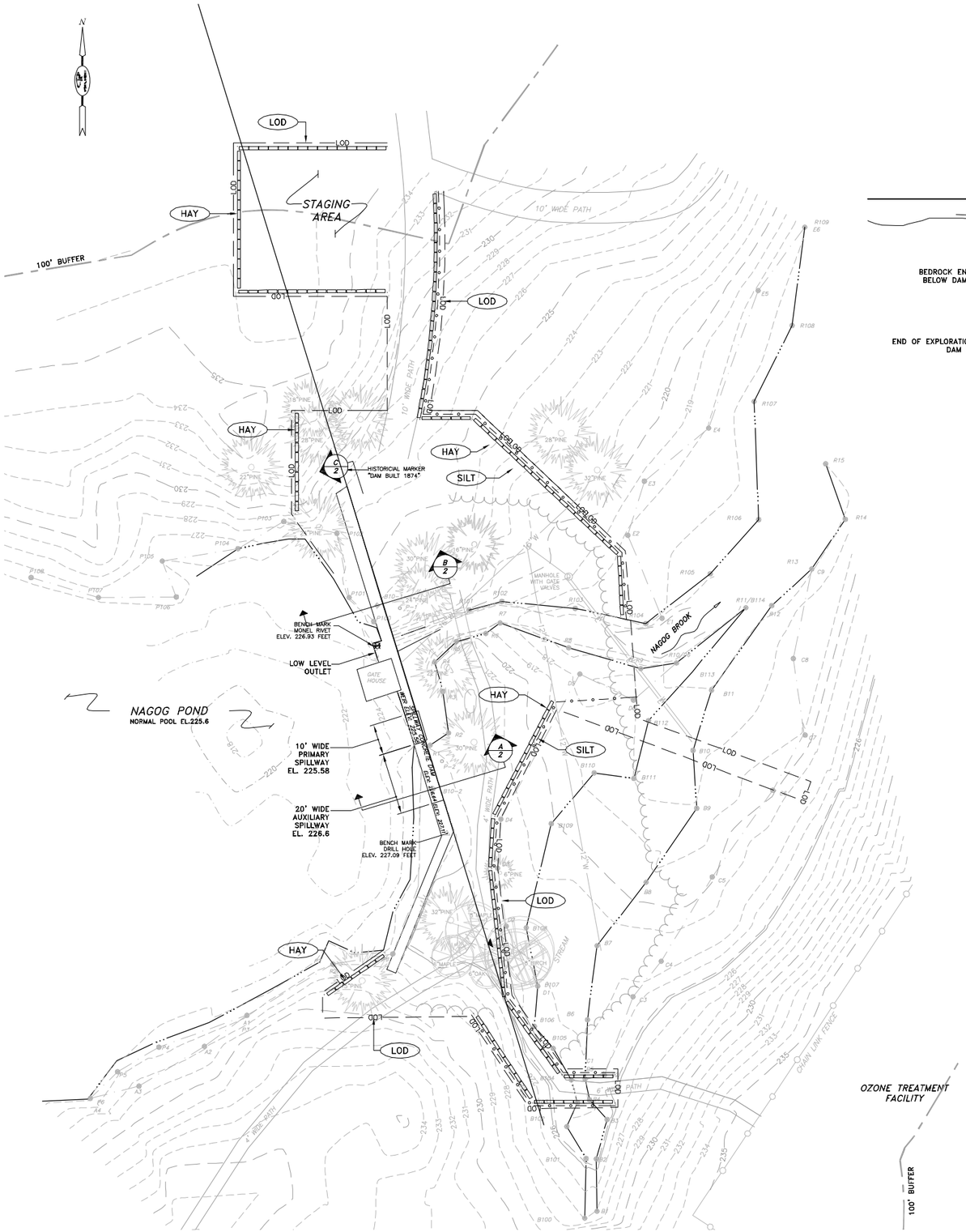

EXISTING SITE PLAN
SCALE: 1"=20'

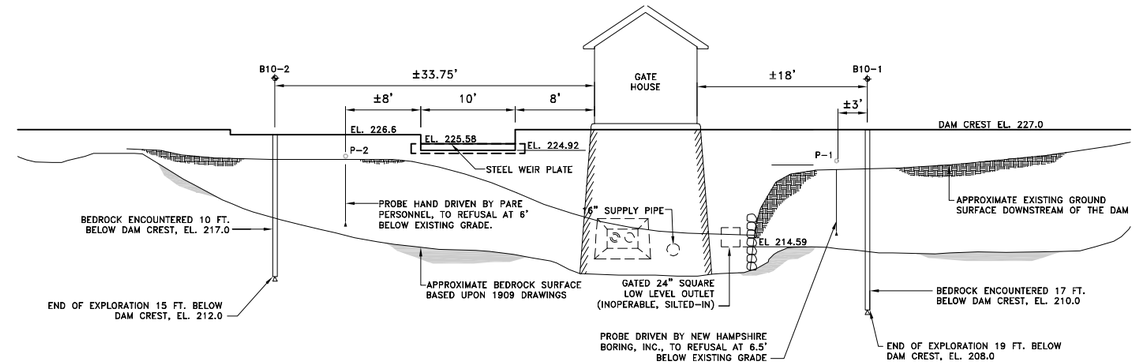

C/2 EXISTING DAM PROFILE (LOOKING UPSTREAM)
SCALE: 1"=8'-0"

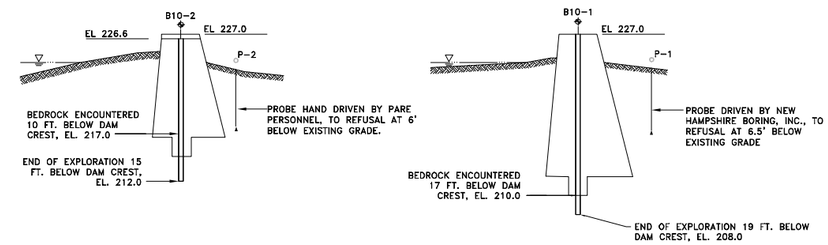

A/2 SECTION A-A
SCALE: 1"=8'-0"

B/2 SECTION B-B
SCALE: 1"=8'-0"

BORING INFORMATION
SCALE: AS NOTED

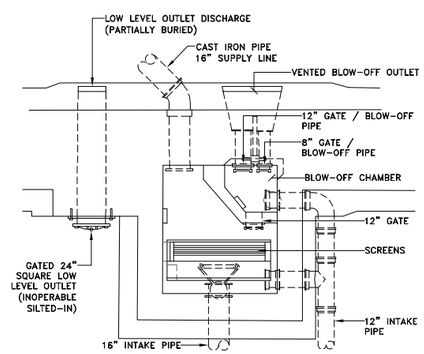

EXISTING GATE HOUSE PLAN
SCALE: 3/16"=1'-0"

HALF SIZED
ISSUED FOR PERMITS 01-31-12
DRAFT - NOT FOR CONSTRUCTION

PARE
PARE CORPORATION
ENGINEERS - SCIENTISTS - PLANNERS
10 LINCOLN ROAD, SUITE 103
FOXBORO, MA 02035
508-543-1755

SCALE ADJUSTMENT GUIDE
0" 1"
BAR IS ONE INCH ON ORIGINAL DRAWING.

NAGOG POND DAM REPAIRS

MA00129 / 4-9-2-5

ACTON, MASSACHUSETTS
TOWN OF CONCORD

REVISIONS:

PROJECT NO.:	10122.01
DATE:	JANUARY 2012
SCALE:	AS NOTED
DESIGNED BY:	KMC / ARO
CHECKED BY:	ARO
DRAWN BY:	JHG / JDB
APPROVED BY:	JMB

EXISTING CONDITIOIN PLAN, SECTION AND PROFILE

SHEET NO.: 2

Z:\Jobs\10 Jobs\10122.01 Nagog Pond Dam - Design & Construction Phase\DWGS\200 - Existing Conditions.dwg

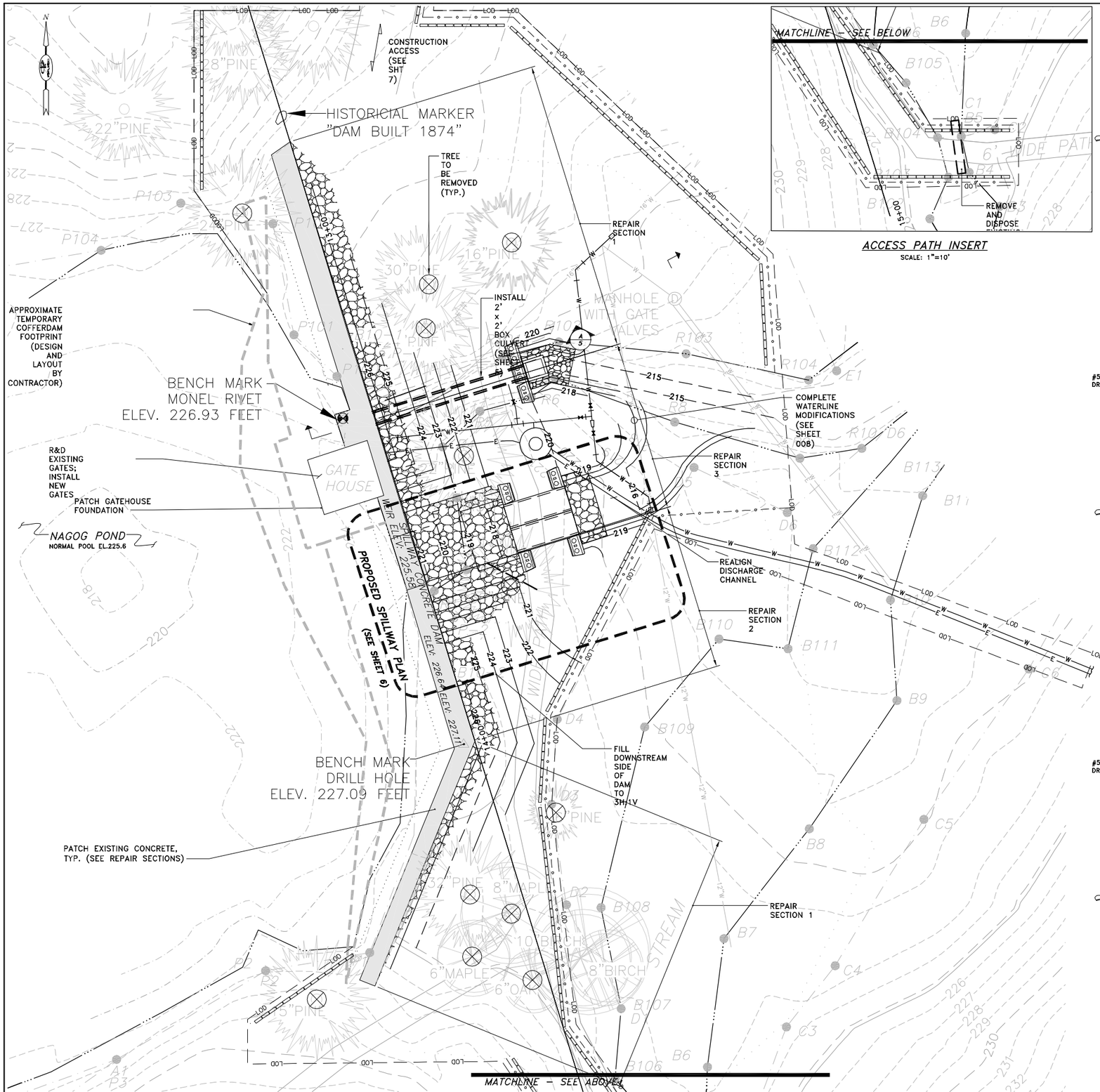

PROPOSED SITE PLAN

SCALE: 1"=10'

ACCESS PATH INSERT

SCALE: 1"=10'

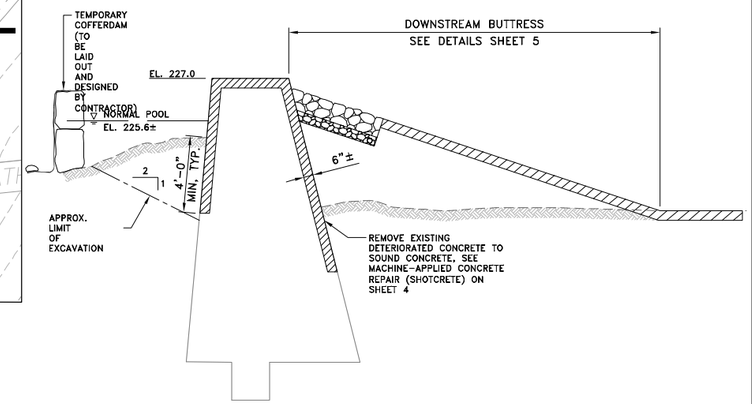

REPAIR SECTION 1

SCALE: 1/4"=1'-0"

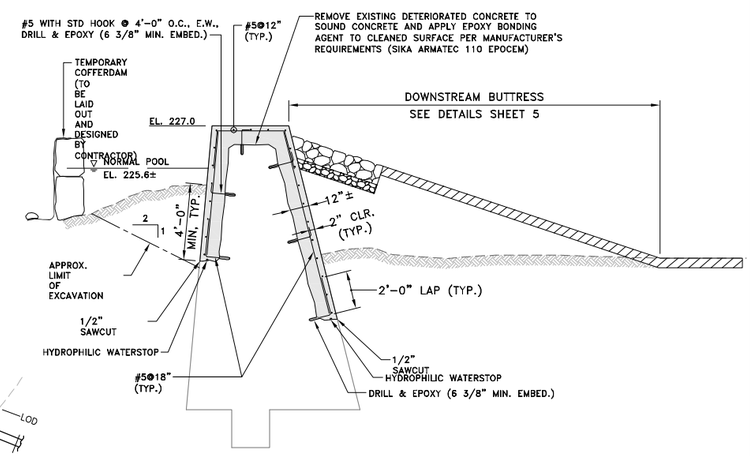

REPAIR SECTION 2

SCALE: 1/4"=1'-0"

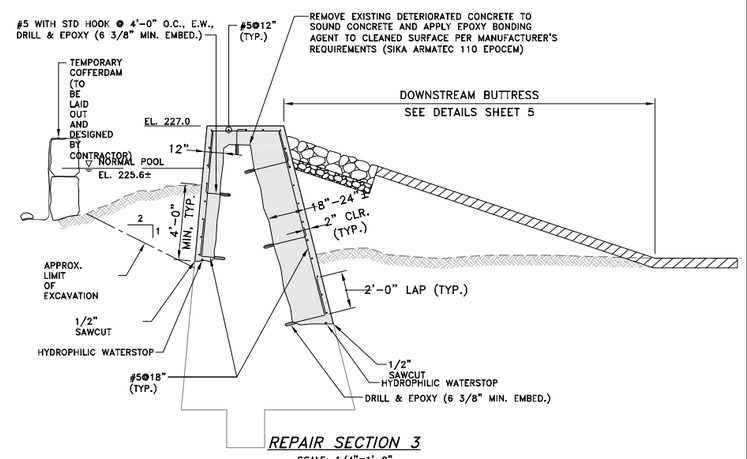

REPAIR SECTION 3

SCALE: 1/4"=1'-0"

HALF SIZED
ISSUED FOR PERMITS 01-31-12
DRAFT - NOT FOR CONSTRUCTION

PARE
PARE CORPORATION
ENGINEERS - SCIENTISTS - PLANNERS
10 LINCOLN ROAD, SUITE 103
FOXBORO, MA 02035
508-543-1755

SCALE ADJUSTMENT GUIDE
0" 1"
BAR IS ONE INCH ON ORIGINAL DRAWING.

NAGOG POND DAM REPAIRS

MA00129 / 4-9-2-5

ACTON, MASSACHUSETTS
TOWN OF CONCORD

REVISIONS:

PROJECT NO.:	10122.01
DATE:	JANUARY 2012
SCALE:	AS NOTED
DESIGNED BY:	KMC / ARO
CHECKED BY:	ARO
DRAWN BY:	JHG / JDB
APPROVED BY:	JMB

DAM IMPROVEMENTS
PLAN AND SECTIONS

SHEET NO.: 3

Z:\JOBS\10 Jobs\10122.01 Nagog Pond Dam – Design & Construction Phase\DWGS\300 – Dam Improvements Plan & Section.dwg

STRUCTURAL NOTES:

A. CAST-IN-PLACE CONCRETE

1. CONCRETE WORK SHALL CONFORM TO THE LATEST EDITIONS OF THE "BUILDING CODE REQUIREMENTS FOR REINFORCED CONCRETE" (ACI 318).
2. CONCRETE SHALL BE PROPORTIONED, MIXED AND PLACED UNDER THE SUPERVISION OF THE APPROVED TESTING AGENCY.
3. CONCRETE SHALL BE NORMAL WEIGHT, WITH TYPE II CEMENT, AND SHALL HAVE A MINIMUM COMPRESSIVE STRENGTH AT 28 DAYS AS FOLLOWS:
   * 4,000 PSI 3/4" AGGREGATE-TYPICAL
   * 5,000 PSI 3/8" AGGREGATE-SHOTCRETE
4. ALL CONCRETE EXPOSED TO WEATHER SHALL BE AIR-ENTRAINED WITH AN AIR CONTENT OF 6% ± 1%.
5. CALCIUM CHLORIDE SHALL NOT BE USED.
6. WATERSTOPS SHALL BE PROVIDED AS SHOWN, OR IN ALL EXTERIOR CONSTRUCTION JOINTS AND SHALL BE CONTINUOUS.
7. PROVIDE A SMOOTH RUBBED SURFACE, FREE FROM BURRS, TIE HOLES, HONEYCOMB-ING, ETC. ON EXPOSED CONCRETE WALLS.
8. ALL EXPOSED EDGES SHALL BE CHAMFERED 1" UNLESS NOTED OTHERWISE.
9. WHEN CONCRETE IS PLACED AGAINST PREVIOUSLY HARDENED CONCRETE, THE INTERFACE SHALL BE CLEAN, FREE OF LAITANCE, AND INTENTIONALLY ROUGHENED TO FULL AMPLITUDE OF APPROXIMATELY 1/4 INCH.
10. NEW CONCRETE SHALL BE EPOXY BONDED TO HARDENED CONCRETE WITH SIKA ARMATEC 110 EPO CEM MANUFACTURED BY SIKA CORP. OR ENGINEER APPROVED EQUAL. APPLY PER MANUFACTURER'S RECOMMENDATIONS.
11. ALL CONCRETE SHALL BE PLACED IN THE DRY.

B. REINFORCING STEEL

1. REINFORCING BARS SHALL BE DETAILED IN ACCORDANCE WITH ACI 315 MANUAL OF STANDARD PRACTICE FOR DETAILING REINFORCED CONCRETE STRUCTURES.
2. COMPLETE SHOP DRAWINGS AND SCHEDULES OF ALL REINFORCING STEEL SHALL BE PREPARED BY THE CONTRACTOR AND SUBMITTED TO THE ENGINEER FOR APPROVAL PRIOR TO COMMENCEMENT OF THAT PORTION OF THE WORK. ALL ACCESSORIES MUST BE SHOWN ON THE SHOP DRAWINGS.
3. REINFORCING BARS SHALL CONFORM TO ASTM A615, GRADE 60.
4. ALL REINFORCING STEEL SHALL BE EPOXY COATED. HOWEVER, ALL SUPPORTS SUCH AS CHAIRS, BOLSTERS, SPACERS BLOCKS AND HANGERS SHALL BE OF NON-CORROSIVE MATERIAL. PROVIDE MINIMUM #5 SUPPORT BAR.
5. UNLESS NOTED ON THE DRAWINGS, THE MINIMUM CONCRETE PROTECTION (CLEAR COVER) FOR CAST-IN-PLACE CONCRETE COVER OVER REINFORCEMENT SHALL BE 3 INCHES.
6. MINIMUM REINFORCEMENT DEVELOPMENT LENGTH AND LAP SPLICE LENGTHS SHALL BE IN ACCORDANCE WITH ACI 318 FOR CLASS B LAPS UNLESS OTHERWISE NOTED ON THE DRAWINGS.
7. WELDED WIRE FABRIC (WWF) SHALL CONFORM TO ASTM A185 AND SHALL BE SUPPLIED IN FLAT SHEETS ONLY. SPLICES OF WWF SHALL BE AT LEAST 12 INCHES.

C. CONCRETE REPAIR

1. DETAILS HAVE BEEN CREATED USING ACCEPTABLE SIKA PRODUCTS. "OR EQUAL" SUBSTITUTIONS ARE ACCEPTABLE PROVIDED THEY ARE APPROVED BY THE ENGINEER IN WRITING.
2. NEW CONCRETE SHALL BE BONDED TO EXISTING CONCRETE USING SIKA ARMATEC 110 EPO CEM OR APPROVED EQUAL.
3. DRILL AND EPOXY ANCHORAGES SHALL BE HILTI "HVA ADHESIVE SYSTEM" WITH STANDARD "HAS" RODS OR EPOXY COATED DOWELS, OR APPROVED EQUAL. ROD/DOWEL EMBEDMENT LENGTH AND DIAMETER SHALL BE AS INDICATED ON DRAWINGS.
4. ALL REPAIR PRODUCTS SHALL BE INSTALLED PER THE MANUFACTURER'S RECOMMENDATIONS.
5. REFER TO MANUFACTURER'S DATA SHEETS FOR PROPER SURFACE PREPARATION, APPLICATION AND CURING, AND LIMITATIONS FOR PRODUCTS SPECIFIED.

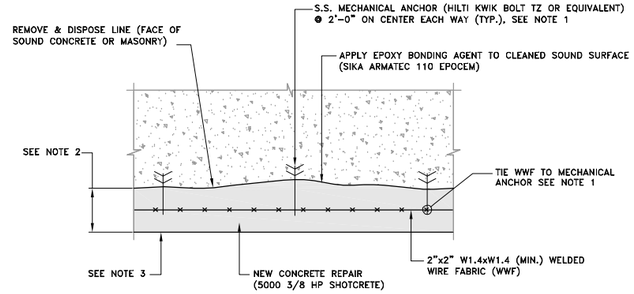

NOTES:

1. WELDED WIRE FABRIC AND MECHANICAL ANCHORS ONLY REQUIRED WHERE REPAIR DEPTH IS 1 1/2" OR GREATER.
2. MINIMUM REPAIR DEPTH SHALL BE 1/3"±. REFER TO MANUFACTURER'S RECOMMENDATIONS FOR MAXIMUM LIFT THICKNESS
3. MORTAR SHALL BE APPLIED IN A MANNER AS TO COMPLETELY FILL THE VOIDS AND PROVIDE A SMOOTH SURFACE EVEN WITH THE EXISTING FACE OF CONCRETE.

MACHINE-APPLIED CONCRETE REPAIR (SHOTCRETE)
NOT TO SCALE

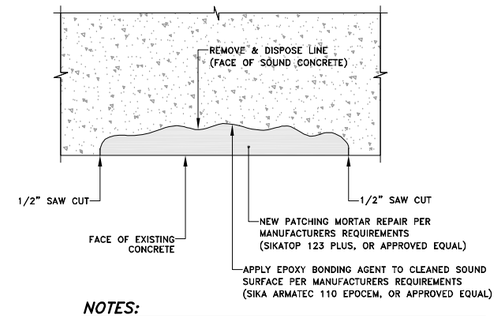

NOTES:

1. MATERIAL USED TO REPAIR CONCRETE SPALLS SHALL MATCH THE COLOR AND TEXTURE OF THE EXISTING MATERIAL.
2. MORTAR SHALL BE APPLIED IN A MANNER AS TO COMPLETELY FILL THE VOIDS AND PROVIDE A SMOOTH SURFACE EVEN WITH THE EXISTING FACE OF CONCRETE.
3. IF REPAIR IS LOCATED AT NEW WALL CONCRETE FROM WALL SHALL FILL PATCH INSTEAD OF MORTAR.

1/8" TO 1 1/2" SHALLOW CONCRETE SPALL REPAIR DETAILS
NOT TO SCALE

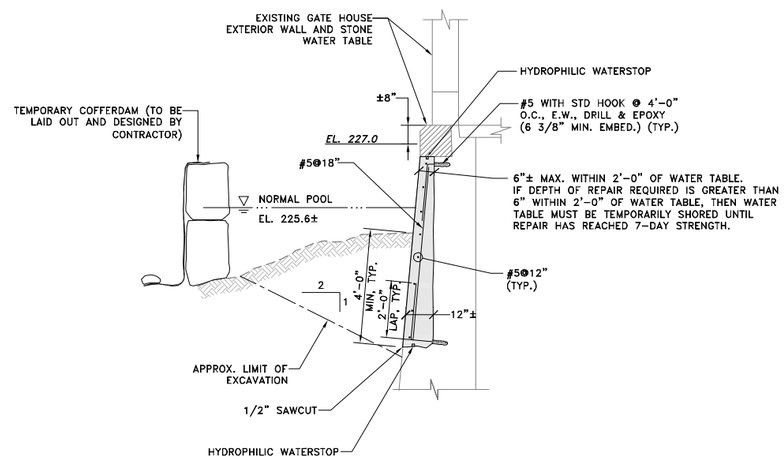

GATEHOUSE FOUNDATION REPAIR DETAIL
NOT TO SCALE

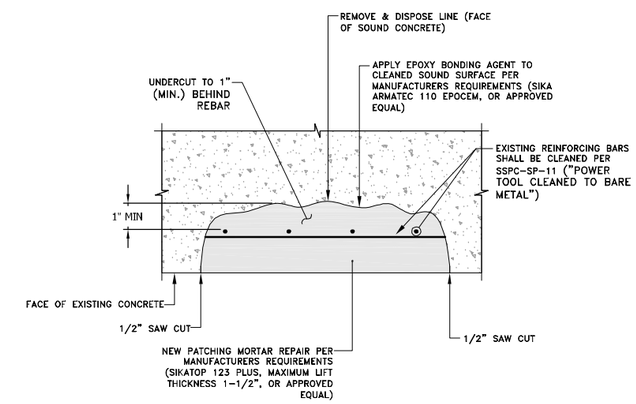

NOTES:

1. MATERIAL USED TO REPAIR CONCRETE SPALLS SHALL MATCH THE COLOR AND TEXTURE OF THE EXISTING MATERIAL.
2. COST OF SAW CUT AND REINFORCING (WHEN REQUIRED) ARE INCLUDED WITHIN THE CONTRACT UNIT PRICE FOR THIS REPAIR.
3. IF EXPOSED REINFORCING STEEL HAS MORE THAN 20%%% LOSS OF SECTION THEN A NEW EPOXY COATED REINFORCING BAR OF THE SAME DIAMETER SHALL BE SPLICED TO THE EXISTING BAR.
4. IF REPAIR IS LOCATED AT NEW WALL CONCRETE FROM WALL SHALL FILL PATCH INSTEAD OF MORTAR.

1 1/2" TO 3" DEEP CONCRETE SPALL REPAIR WHEN REINFORCING BARS ARE ENCOUNTERED DETAIL
NOT TO SCALE

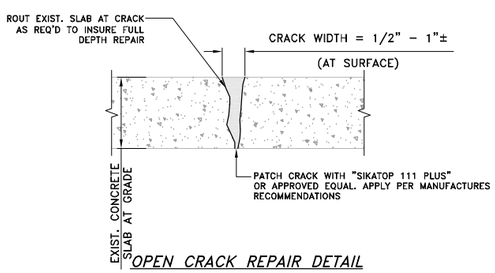

OPEN CRACK REPAIR DETAIL
NOT TO SCALE

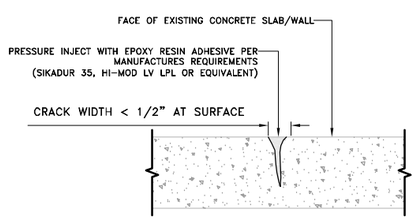

CONCRETE CRACK REPAIR DETAIL
NOT TO SCALE

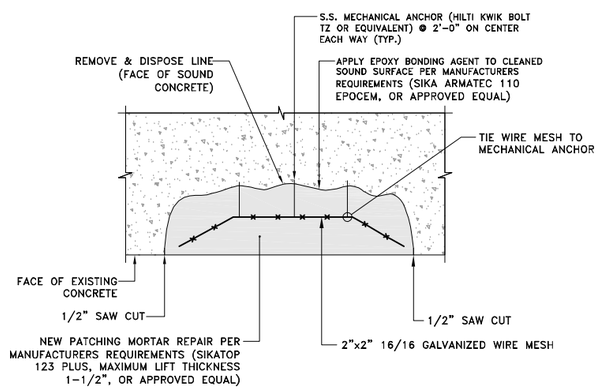

1 1/2" TO 3" DEEP CONCRETE SPALL REPAIR WITH NO REINFORCING BARS ENCOUNTERED DETAIL
NOT TO SCALE

HALF SIZED
ISSUED FOR PERMITS 01-31-12
DRAFT - NOT FOR CONSTRUCTION

PARE
PARE CORPORATION
ENGINEERS - SCIENTISTS - PLANNERS
10 LINCOLN ROAD, SUITE 103
FOXBORO, MA 02035
508-543-1755

SCALE ADJUSTMENT GUIDE
0" 1"
BAR IS ONE INCH ON ORIGINAL DRAWING.

NAGOG POND DAM REPAIRS
MA00129 / 4-9-2-5
ACTON, MASSACHUSETTS
TOWN OF CONCORD

REVISIONS:

PROJECT NO.:	10122.01
DATE:	JANUARY 2012
SCALE:	AS NOTED
DESIGNED BY:	KMC / ARO
CHECKED BY:	ARO
DRAWN BY:	JHG / JDB
APPROVED BY:	JMB

STRUCTURAL NOTES AND DETAILS

SHEET NO.: 4

Z:\JOBS\10 Jobs\10122.01 Nagog Pond Dam - Design & Construction Phase\DWGS\400 - Structural Details.dwg

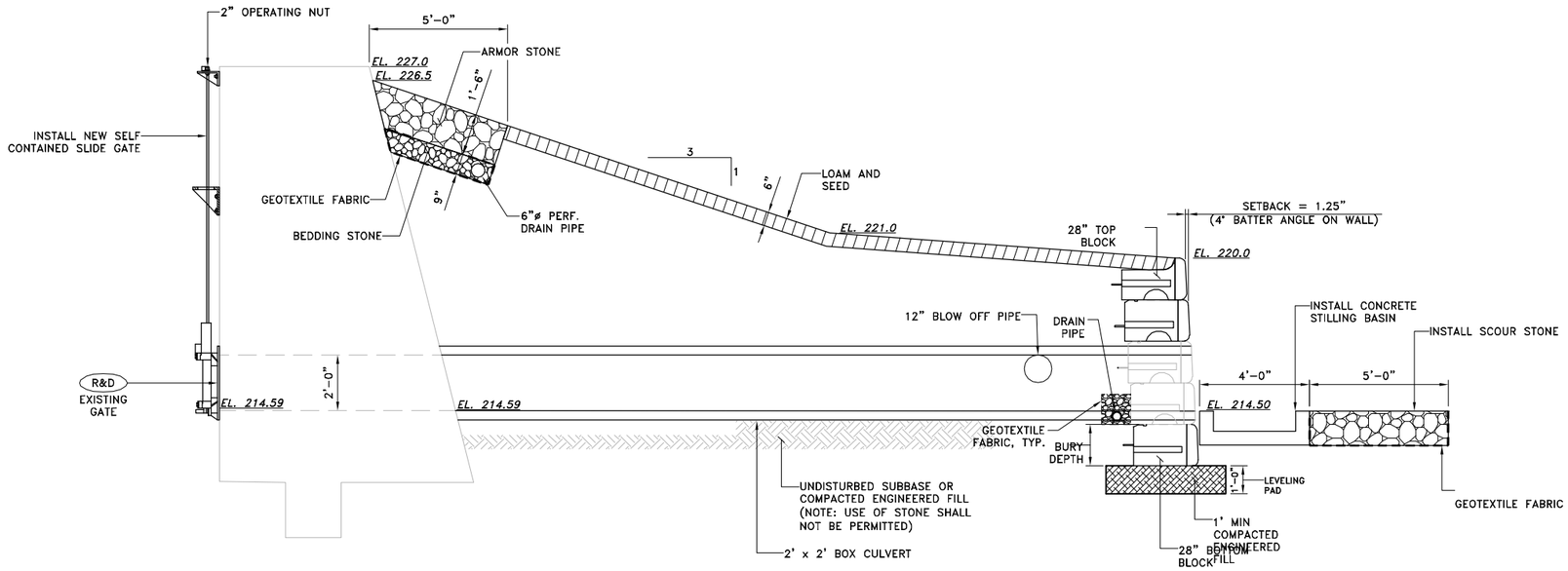

A/3 **SECTION A**
SCALE: 3/8"=1'-0"

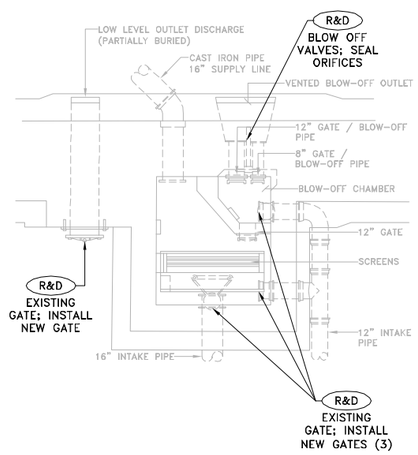

NOTE

CONTRACTOR SHALL DESIGN A GATEHOUSE DEWATERING / CONTROL OF WATER PLAN FOR APPROVAL PRIOR TO COMPLETING THE WORK.

GATEHOUSE REPAIR PLAN
SCALE: 3/16"=1'-0"

IN DEVELOPMENT

GATE DETAILS
SCALE: T.B.D.

HALF SIZED
ISSUED FOR PERMITS 01-31-12
DRAFT - NOT FOR CONSTRUCTION

PARE
PARE CORPORATION
ENGINEERS - SCIENTISTS - PLANNERS
10 LINCOLN ROAD, SUITE 103
FOXBORO, MA 02035
508-543-1755

SCALE ADJUSTMENT GUIDE
0" 1"
BAR IS ONE INCH ON ORIGINAL DRAWING.

NAGOG POND DAM REPAIRS
MA00129 / 4-9-2-5
ACTON, MASSACHUSETTS
TOWN OF CONCORD

REVISIONS:

PROJECT NO.:	10122.01
DATE:	JANUARY 2012
SCALE:	AS NOTED
DESIGNED BY:	KMC / ARO
CHECKED BY:	ARO
DRAWN BY:	JHG / JDB
APPROVED BY:	JMB

MISCELLANEOUS DETAILS

SHEET NO.: 5

Z:\JOBS\10 Jobs\10122.01 Nagog Pond Dam - Design & Construction Phase\DWGS\500 - Misc Details.dwg

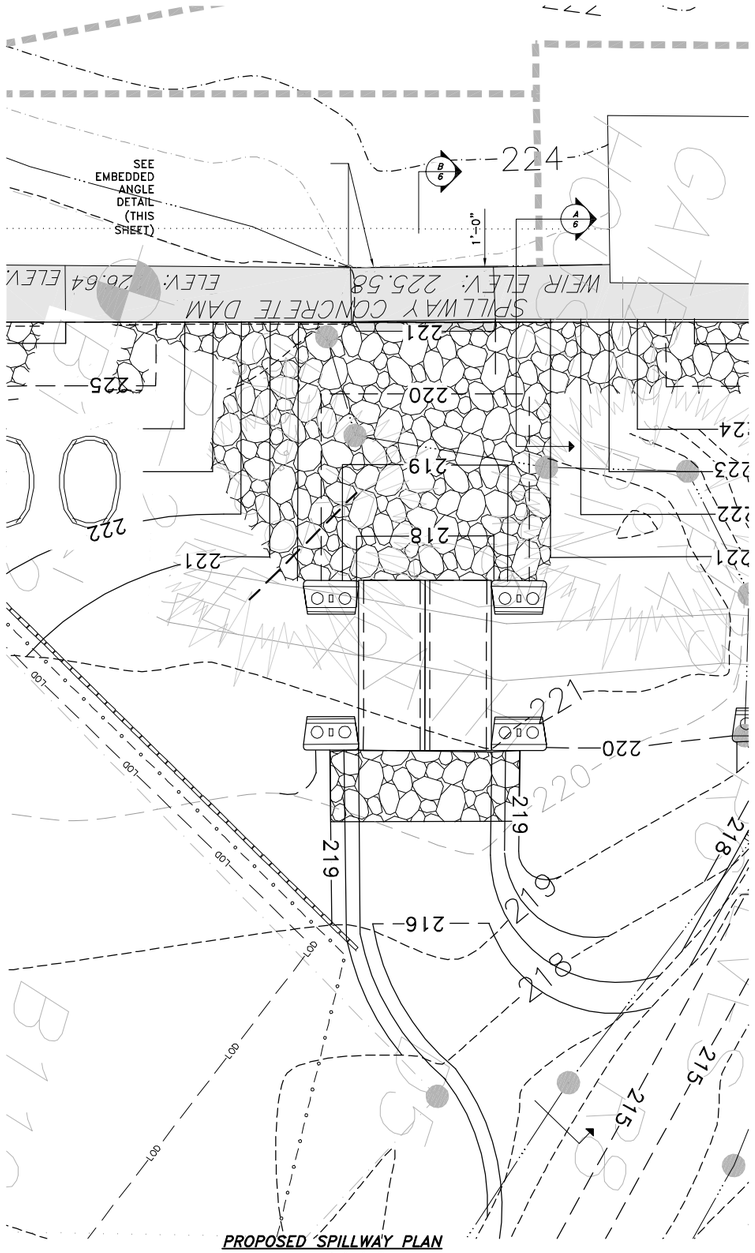

PROPOSED SPILLWAY PLAN
SCALE: 1/16"=1'-0"

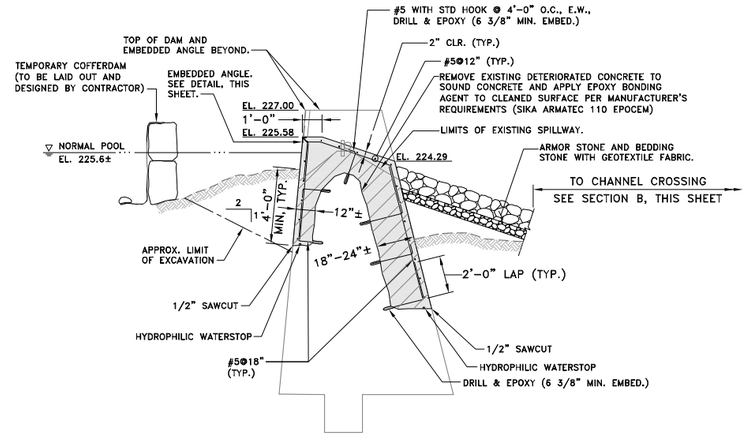

SECTION A
(A/6) (SPILLWAY WEIR)
SCALE: 1/4"=1'-0"

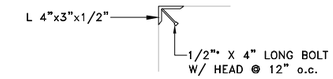

EMBEDDED ANGLE DETAIL.
NOT TO SCALE

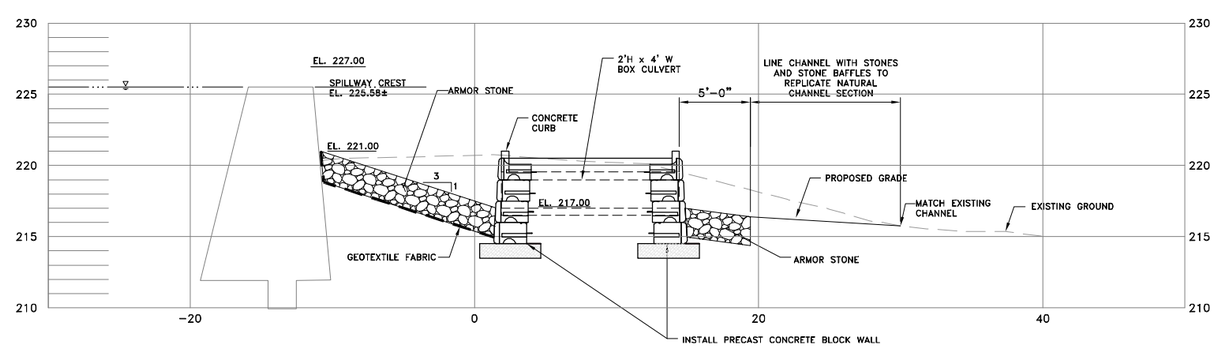

PROPOSED SPILLWAY PROFILE
(B/6)
SCALE: 3/16"=1'-0"

HALF SIZED
ISSUED FOR PERMITS 01-31-12
DRAFT - NOT FOR CONSTRUCTION

Z:\JOBS\10 Jobs\10122.01 Nagog Pond Dam - Design & Construction Phase\DWGS\600 - Spillway Repair Plan.dwg

PARE
PARE CORPORATION
ENGINEERS - SCIENTISTS - PLANNERS
10 LINCOLN ROAD, SUITE 103
FOXBORO, MA 02035
508-543-1755

SCALE ADJUSTMENT GUIDE
0" 1"
BAR IS ONE INCH ON ORIGINAL DRAWING.

NAGOG POND DAM REPAIRS

MA00129 / 4-9-2-5

ACTON, MASSACHUSETTS
TOWN OF CONCORD

REVISIONS:

PROJECT NO.:	10122.01
DATE:	JANUARY 2012
SCALE:	AS NOTED
DESIGNED BY:	KMC / ARO
CHECKED BY:	ARO
DRAWN BY:	JHG / JDB
APPROVED BY:	JMB

SPILLWAY
REPAIR PLAN

SHEET NO.:
6

SITE ACCESS PLAN

SCALE: 1"=200'

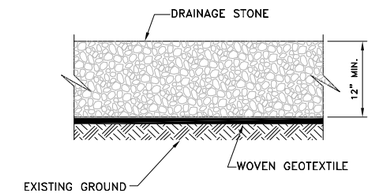

TEMPORARY ROADWAY (AS REQUIRED)

NOT TO SCALE

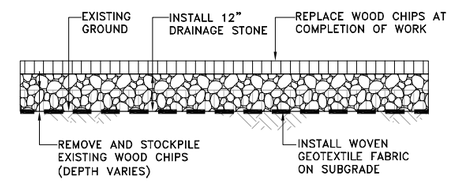

PERMANENT ROADWAY STABILIZATION PRS

NOT TO SCALE

HALF SIZED
ISSUED FOR PERMITS 01-31-12
DRAFT - NOT FOR CONSTRUCTION

PARE
PARE CORPORATION
ENGINEERS - SCIENTISTS - PLANNERS
10 LINCOLN ROAD, SUITE 103
FOXBORO, MA 02035
508-543-1755

SCALE ADJUSTMENT GUIDE
0" 1"
BAR IS ONE INCH ON ORIGINAL DRAWING.

NAGOG POND DAM REPAIRS

MA00129 / 4-9-2-5

ACTON, MASSACHUSETTS
TOWN OF CONCORD

REVISIONS:

PROJECT NO.:	10122.01
DATE:	JANUARY 2012
SCALE:	AS NOTED
DESIGNED BY:	KMC / ARO
CHECKED BY:	ARO
DRAWN BY:	JHG / JDB
APPROVED BY:	JMB

SITE ACCESS AND CONSTRUCTION STAGING PLAN

SHEET NO.: 7

Z:\JOBS\10 Jobs\10122.01 Nagog Pond Dam - Design & Construction Phase\DWGS\700 - Site Access.dwg

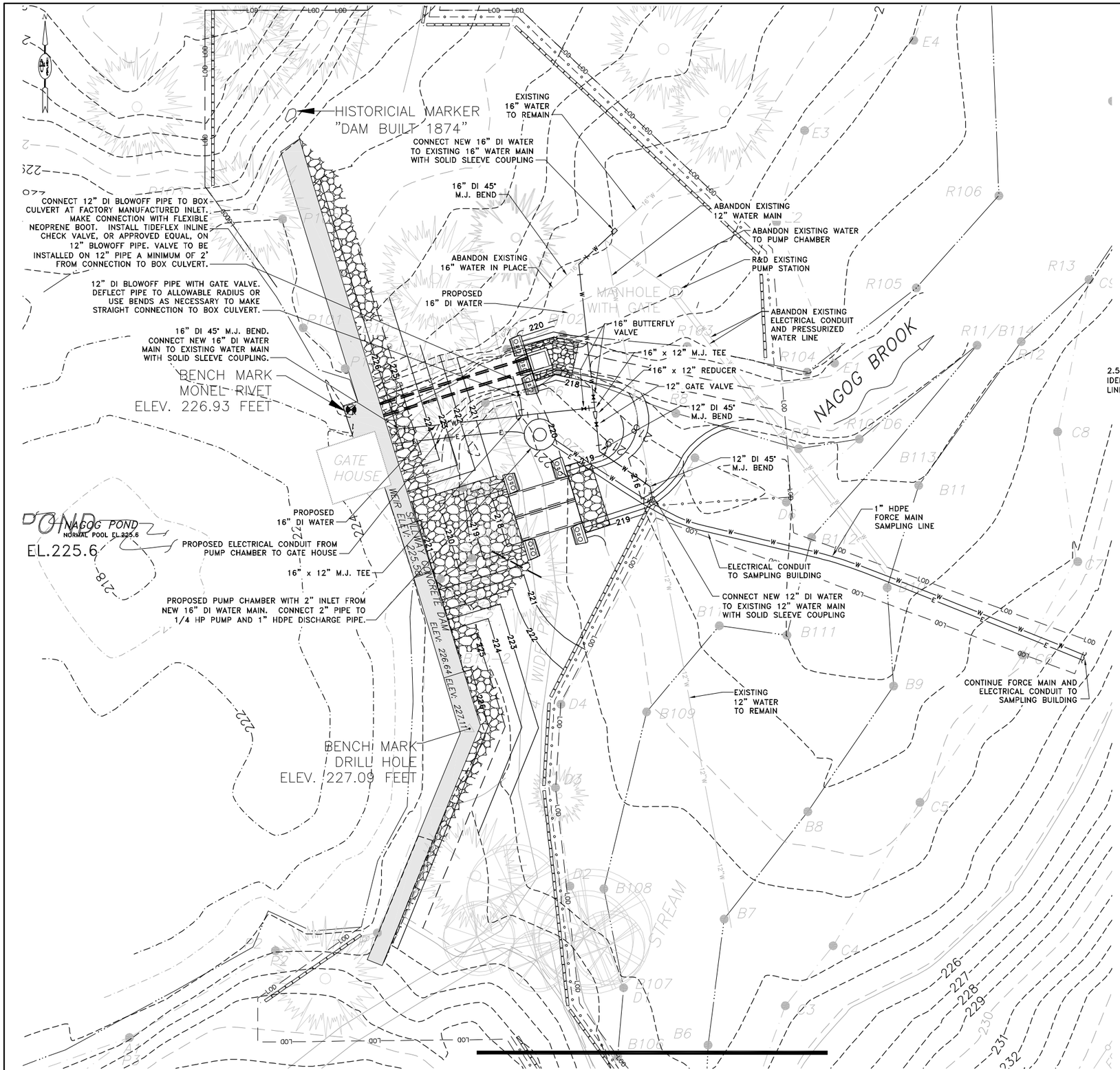

PROPOSED SITE PLAN

SCALE: 1"=10'

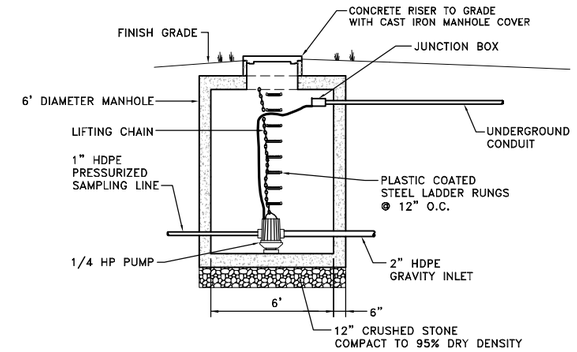

PUMP CHAMBER DETAIL

SCALE: N.T.S.

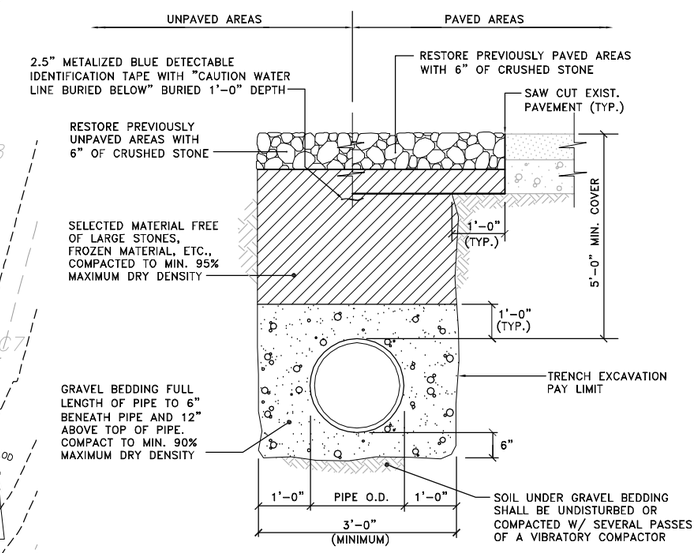

WATER MAIN TRENCH DETAIL

SCALE: N.T.S.

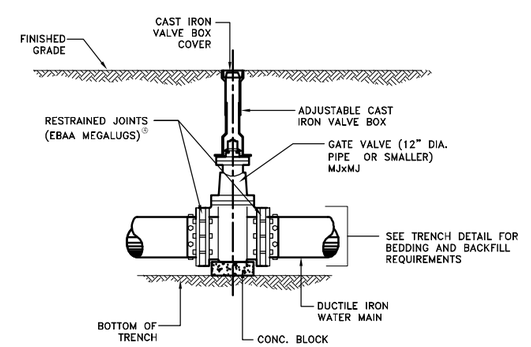

GATE VALVE DETAIL

SCALE: N.T.S.

HALF SIZED
ISSUED FOR PERMITS 01-31-12
DRAFT - NOT FOR CONSTRUCTION

PARE
PARE CORPORATION
ENGINEERS - SCIENTISTS - PLANNERS
10 LINCOLN ROAD, SUITE 103
FOXBORO, MA 02035
508-543-1755

SCALE ADJUSTMENT GUIDE
0" 1"
BAR IS ONE INCH ON ORIGINAL DRAWING.

NAGOG POND DAM REPAIRS

MA00129 / 4-9-2-5

ACTON, MASSACHUSETTS
TOWN OF CONCORD

REVISIONS:

PROJECT NO.:	10122.01
DATE:	JANUARY 2012
SCALE:	AS NOTED
DESIGNED BY:	KMC / ARO
CHECKED BY:	ARO
DRAWN BY:	JHG / JDB
APPROVED BY:	JMB

PIPING IMPROVEMENTS PLAN & DETAILS

SHEET NO.: 8

Z:\JOBS\10 Jobs\10122.01 Nagog Pond Dam - Design & Construction Phase\DWGS\800 - Piping Improvements r.dwg

From: CERO_NOI@MassMail.state.ma.us
To: acathcart@concordma.gov; aorsi@parecorp.com
Cc: cero_noi@state.ma.us; Conservation Commission; cero_noi@state.ma.us
Subject: MassDEP NOI File Number
Date: Thursday, February 09, 2012 10:22:58 AM

COMMONWEALTH OF MASSACHUSETTS
EXECUTIVE OFFICE OF ENERGY & ENVIRONMENTAL AFFAIRS
DEPARTMENT OF ENVIRONMENTAL PROTECTION
CENTRAL REGIONAL OFFICE
627 MAIN STREET, WORCESTER, MA 01608 508-792-7650

Date: 02/09/2012 Municipality ACTON

RE: **NOTIFICATION OF WETLANDS PROTECTION ACT FILE NUMBER**

The Department of Environmental Protection has received a Notice of Intent filed in accordance with the Wetlands Protection Act (M.G.L. c. 131, §40):

Applicant	TOWN OF CONCORD DPW	**Owner Address**
Address	135 KEYES RD,CONCORD MA 01742	
Locus	339 NAGOG HILL RD , ACTON MA 01720	

This project has been assigned the following file # : **CE 085-1081**

ISSUANCE OF A FILE NUMBER INDICATES ONLY COMPLETENESS OF SUBMITTAL, NOT APPROVAL OF APPLICATION

Although a file # is being issued, please note the following:

NONE NOTED.

Regards,
for MassDEP,

(508)-767-2709
Joseph.Bellino@State.MA.US