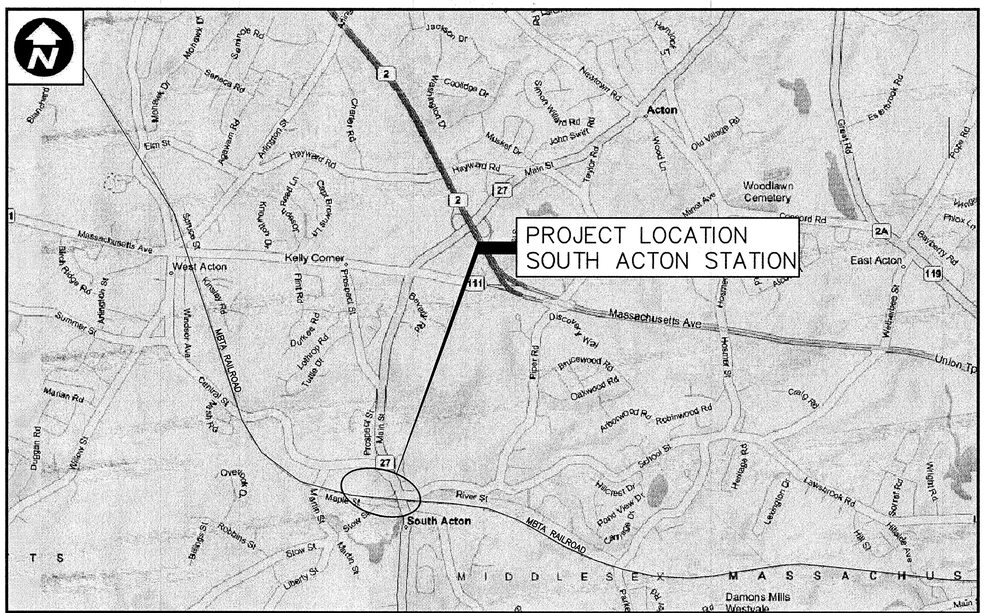

LOCATION PLAN
NOT TO SCALE

SOUTH ACTON COMMUTER RAIL STATION

MASSACHUSETTS BAY TRANSPORTATION AUTHORITY

FITCHBURG COMMUTER RAIL LINE IMPROVEMENT PROJECT
BOSTON TO FITCHBURG, MASSACHUSETTS
CONTRACT NO. G67CN01

SOUTH ACTON STATION
VOLUME 1 OF 1
PS&E DESIGN SUBMITTAL

DEPARTMENT OF TRANSPORTATION
FEDERAL TRANSIT ADMINISTRATION
CAPITAL GRANT CONTRACT MA-03-0292
PROJECT NO.: G67

MAY 17, 2012
Plan Numbers 168482 to 168737

HNTB The HNTB Companies Engineers Architects Planners

300 APOLLO DRIVE
CHELMSFORD, MASSACHUSETTS 01824

IN ASSOCIATION WITH:

JACOBS™ 343 CONGRESS STREET BOSTON, MA 02110 (617) 242-9222

Lozano, Baskin, and Associates, Inc.
Architecture • Urban Design • City Planning
205 Mt. Auburn St. Watertown, MA 02472

C&C Consulting Engineers, LLC 214 LINCOLN STREET BOSTON, MA 02134 (617) 254-6930

MBTA APPROVALS:

ASSISTANT GENERAL MANAGER FOR DESIGN AND CONSTRUCTION
EDMOND F. HUNTER — Date: 5-21-12

DIRECTOR OF COMMUTER RAIL PROJECTS
JAMES E. JACKSON — Date: 5/21/12

FILE NAME: P:\MBTA\2008\E2X37800\CAD\700CADD\702STATIONS\South Acton\Civil\PS&E\ G-1 Cover Sheet.dwg
PLOT DATE: May 21, 2012 - 10:01am

INDEX OF DRAWINGS

SHEET NO.	PLAN NO.	TITLE
GENERAL		
G-1	168482	COVER SHEET
G-2	168483	INDEX OF DRAWINGS
G-3	168484	GENERAL NOTES - CIVIL
G-4	168485	ABBREVIATIONS AND LEGEND - CIVIL
G-5	168486	GENERAL NOTES - TRACK
G-6	168487	ABBREVIATIONS AND LEGEND - TRACK
G-7	168488	CURVE DEFINITIONS AND GEOMETRY
MASTER KEY PLAN		
KP-3	168489	KEY PLAN, MP 24 TO MP 27
SURVEY CONTROL		
SC-2	168490	SURVEY CONTROL POINTS, MASTER SHEET 2
SC-3	168491	SURVEY CONTROL POINTS, MASTER SHEET 3
SC-5	168492	SURVEY CONTROL POINTS, MASTER SHEET 5
SC-101	168493	SURVEY CONTROL POINTS AND TIE DOWN SKETCH, SHEET 1
SC-102	168494	SURVEY CONTROL POINTS AND TIE DOWN SKETCH, SHEET 2
SC-111	168495	SURVEY CONTROL POINTS AND TIE DOWN SKETCH, SHEET 11
SC-136	168496	SURVEY CONTROL POINTS AND TIE DOWN SKETCH, SHEET 36
SC-137	168497	SURVEY CONTROL POINTS AND TIE DOWN SKETCH, SHEET 37
SC-138	168498	SURVEY CONTROL POINTS AND TIE DOWN SKETCH, SHEET 38
SC-139	168499	SURVEY CONTROL POINTS AND TIE DOWN SKETCH, SHEET 39
SC-216	168500	SURVEY CONTROL POINTS AND BASELINE, MP 25 TO MP 26
TRACK		
T-74	168501	SOUTH ACTON STATION, TRACK 1 GEOMETRY DATA
T-75	168502	SOUTH ACTON STATION, TRACK 2 GEOMETRY DATA
T-76	168503	SOUTH ACTON STATION, TRACK PLAN AND PROFILE, STA. 1307+00 TO STA. 1319+00
T-77	168504	SOUTH ACTON STATION, TRACK PLAN AND PROFILE, STA. 1319+00 TO STA. 1329+00
T-78	168505	SOUTH ACTON STATION, TRACK PLAN AND PROFILE, STA. 1329+00 TO STA. 1341+00
T-79	168506	SOUTH ACTON STATION, TRACK PLAN AND PROFILE, STA. 1341+00 TO STA. 1352+00
T-83	168507	SOUTH ACTON STATION, TRACK 1 PROFILE, STA. 1307+00 TO STA. 1329+00
T-84	168508	SOUTH ACTON STATION, TRACK 1 PROFILE, STA. 1329+00 TO STA. 1352+00
UTILITIES		
U-41	168509	EXISTING UTILITY PLAN, MAIN STREET BRIDGE EASEMENTS (MP. 25.20), ACTON, MA
U-42	168510	EXISTING UTILITY PLAN, RAILROAD STREET (MP. 25.30), ACTON, MA
CIVIL		
C-1	168511	EXISTING CONDITIONS PLAN, SHEET 1 OF 2
C-2	168512	EXISTING CONDITIONS PLAN, SHEET 2 OF 2
C-3	168513	RIGHT OF WAY AND PROPERTY PLAN
C-4	168514	RIGHT OF WAY AND PROPERTY OWNERSHIP DATA
C-5	168515	EROSION CONTROL PLAN
C-6	168516	EROSION CONTROL DETAILS
C-7	168517	DEMOLITION PLAN
C-8	168518	OVERALL SITE PLAN
C-9	168519	SITE PLAN - EAST END
C-10	168520	SITE PLAN - WEST END
C-11	168521	DRAINAGE AND GRADING PLAN - EAST END
C-12	168522	DRAINAGE AND GRADING PLAN - WEST END
C-13	168523	SITE PLAN DETAIL, MAPLE STREET DROP OFF
C-14	168524	SITE PLAN DETAIL, RAILROAD STREET ENTRANCE
C-15	168525	SITE PLAN DETAIL, CENTRAL STREET DROP OFF
C-16	168526	TYPICAL SECTIONS, TRACK BED, SHEET 1 OF 2
C-17	168527	TYPICAL SECTIONS, TRACK BED, SHEET 2 OF 2
C-18 TO C-19		NOT USED
C-20	168530	CROSS SECTIONS, STA. 1326+00 TO 1330+00
C-21	168531	CROSS SECTIONS, STA. 1331+00 TO 1332+00
C-22	168532	CROSS SECTIONS, STA. 1332+50 TO 1334+00
C-23	168533	CROSS SECTIONS, STA. 1335+00 TO 1340+00
C-24	168534	CROSS SECTIONS, STA. 1341+00 TO 1342+00
C-25	168535	CROSS SECTIONS, STA. 1335+00 TO 1340+00
C-26	168536	CROSS SECTIONS, STA. 1341+00 TO 1342+00
C-27 TO C-28		NOT USED
C-29	168539	TRAFFIC SIGN SUMMARY
C-30	168540	SITE DETAILS, SHEET 1 OF 4
C-31	168541	SITE DETAILS, SHEET 2 OF 4
C-32	168542	SITE DETAILS, SHEET 3 OF 4
C-33	168543	SITE DETAILS, SHEET 4 OF 4
C-34	168544	DRAINAGE DETAILS, SHEET 1 OF 3
C-35	168545	DRAINAGE DETAILS, SHEET 2 OF 3
C-36	168546	DRAINAGE DETAILS, SHEET 3 OF 3
C-37 TO C-39		NOT USED
C-40	168550	CONSTRUCTION STAGING NOTES
C-41	168551	CONSTRUCTION STAGING PLAN, PHASE 1
C-42	168552	CONSTRUCTION STAGING PLAN, PHASE 2
C-43	168553	CONSTRUCTION STAGING PLAN, PHASE 3
C-44	168554	CONSTRUCTION STAGING PLAN, PHASE 4
C-45	168555	CONSTRUCTION STAGING PLAN, PHASE 5
C-46	168556	CONSTRUCTION STAGING PLAN, PHASE 6
GEOTECHNICAL		
GT-1	168560	BORING LOCATION PLAN
GT-2	168561	BORING LOG, SHEET 1 OF 2
GT-3	168562	BORING LOG, SHEET 2 OF 2

SHEET NO.	PLAN NO.	TITLE
ARCHITECTURAL		
A-0.1	168565	GENERAL NOTES AND SYMBOLS
A-0.2	168566	ABBREVIATIONS
A-1.1	168567	SITE KEY PLAN
A-1.2	168568	ENLARGED SITE PLAN
A-1.3	168569	ENLARGED SITE PLAN
A-1.4	168570	ENLARGED SITE PLAN
A-1.5	168571	ENLARGED SITE PLAN
A-1.6	168572	ENLARGED SITE PLAN
A-2.1	168573	FIRST FLOOR PLAN OUTBOUND HEAD HOUSE
A-2.2	168574	FIRST FLOOR PLAN INBOUND HEAD HOUSE
A-2.3	168575	SECOND FLOOR PLAN OUTBOUND HEAD HOUSE
A-2.4	168576	SECOND FLOOR PLAN INBOUND HEAD HOUSE
A-2.5	168577	ROOF PLAN OUTBOUND HEAD HOUSE
A-2.6	168578	ROOF PLAN INBOUND HEAD HOUSE
A-2.7	168579	PLAN PLATFORM CANOPY
A-2.8	168580	ROOF PLAN PLATFORM CANOPY
A-2.9	168581	ENLARGED FLOOR PLAN AND SECTIONS OUTBOUND ELEVATOR
A-2.10	168582	ENLARGED FLOOR PLAN AND SECTIONS INBOUND ELEVATOR
A-2.11	168583	PLAZA PLAN MAPLE STREET ENTRANCE
A-3.1	168584	NORTH ELEVATION OUTBOUND HEAD HOUSE
A-3.2	168585	SOUTH ELEVATION OUTBOUND HEAD HOUSE
A-3.3	168586	NORTH ELEVATION INBOUND HEAD HOUSE
A-3.4	168587	SOUTH ELEVATION INBOUND HEAD HOUSE
A-3.5	168588	EAST ELEVATION
A-3.6	168589	WEST ELEVATION
A-3.7	168590	ELEVATION PLATFORM CANOPY
A-4.1	168591	BUILDING SECTIONS OUTBOUND HEAD HOUSE
A-4.1A	168592	BUILDING SECTIONS OUTBOUND HEAD HOUSE
A-4.2	168593	BUILDING SECTIONS INBOUND HEAD HOUSE
A-4.2A	168594	BUILDING SECTIONS INBOUND HEAD HOUSE
A-4.3	168595	BUILDING SECTIONS
A-4.4	168596	BUILDING SECTIONS
A-4.5	168597	BUILDING SECTIONS
A-4.6	168598	BUILDING SECTIONS
A-4.7	168599	BUILDING SECTIONS
A-4.8	168600	BUILDING SECTIONS
A-4.9	168601	BUILDING SECTIONS
A-4.10	168602	BUILDING SECTIONS
A-4.11	168603	BUILDING SECTIONS
A-4.12	168604	OUTBOUND CANOPY SECTION
A-4.13	168605	INBOUND CANOPY SECTION
A-5.1	168606	DETAILS WALL SYSTEMS
A-5.2	168607	DETAILS WALL SYSTEMS
A-5.3	168608	DETAILS WALL SYSTEMS
A-5.4	168609	DETAILS
A-5.5	168610	DETAILS DOWNSPOUTS AND GUTTER
A-5.6	168611	DETAILS MISCELLANEOUS
A-5.7	168612	GUARD FENCE SCHEDULE
A-5.8	168613	GUARD FENCE SCHEDULE
A-5.9	168614	GUARD FENCE SCHEDULE
A-5.10	168615	GUARD FENCE SCHEDULE
A-5.11	168616	PLANS, ELEVATIONS, EGRESS STAIR AND WALK
A-5.12	168617	PLANS, ELEVATIONS, SECTIONS, EGRESS STAIR AND WALK
A-5.13	168618	SECTIONS EGRESS STAIR AND WALK
A-5.14	168619	DETAILS, GUARD FENCE AND HANDRAILS
A-5.15	168620	DETAILS, CAMPANILE
A-6.1	168621	SIGN SCHEDULE
A-6.2	168622	SIGN GRAPHICS
A-6.3	168623	SIGN DETAILS OVERHEAD SIGNS
A-6.4	168624	SIGN DETAILS TYPE A AND B
A-6.5	168625	SIGN DETAILS TYPE C
A-6.6	168626	SIGN DETAILS TYPE D
A-6.7	168627	SIGN DETAILS TYPE E
A-6.8	168628	SIGN DETAILS TYPE F AND G
A-7.1	168629	WINDOW SCHEDULE
A-7.2	168630	PROTECTIVE SCREEN SCHEDULE
A-7.3	168631	PROTECTIVE SCREEN SCHEDULE
A-7.4	168632	PROTECTIVE SCREEN DETAILS
A-7.5	168633	DETAILS FRAMES
A-7.6	168634	DETAILS FRAMES
A-7.7	168635	DOOR SCHEDULE AND DETAILS
A-8.1	168636	LANDSCAPE PLAN
A-8.2	168637	LANDSCAPE MODULES
A-8.3	168638	LANDSCAPE DETAILS
STRUCTURAL		
S-100	168640	GENERAL STRUCTURAL NOTES SHEET 1
S-101	168641	GENERAL STRUCTURAL NOTES SHEET 2
S-102	168642	KEY PLAN
S-103	168643	FOUNDATION PLAN SHEET 1
S-104	168644	FOUNDATION PLAN SHEET 2
S-105	168645	FOUNDATION PLAN SHEET 3
S-106	168646	PLATFORM LAYOUT PLAN SHEET 1
S-107	168647	PLATFORM LAYOUT PLAN SHEET 2
S-108	168648	PLATFORM LAYOUT PLAN SHEET 3

STRUCTURAL DRAWINGS CONTINUED IN NEXT COLUMN

SHEET NO.	PLAN NO.	TITLE
STRUCTURAL (CONTINUED)		
S-109	168649	MINIPILE DETAILS
S-110	168650	PIER CAP DETAILS SHEET 1
S-111	168651	PIER CAP DETAILS SHEET 2
S-112	168652	PRECAST PLATFORM PANEL DETAILS SHEET 1
S-113	168653	PRECAST PLATFORM PANEL DETAILS SHEET 2
S-114	168654	PRECAST PLATFORM PANEL DETAILS SHEET 3
S-115	168655	PRECAST PLATFORM PANEL DETAILS SHEET 4
S-116	168656	HEAD HOUSES FOUNDATION PLAN
S-117	168657	HEAD HOUSES FOUNDATION DETAILS SHEET 1
S-118	168658	HEAD HOUSES FOUNDATION DETAILS SHEET 2
S-119	168659	HEAD HOUSES LOWER LEVEL AND LOW ROOF FRAMING PLAN
S-120	168660	HEAD HOUSES SECOND FLOOR FRAMING PLAN
S-121	168661	HEAD HOUSES UPPER LEVEL FRAMING PLAN
S-122	168662	HEAD HOUSES HIGH ROOF FRAMING PLAN
S-123	168663	HEAD HOUSES FRAME ELEVATIONS SHEET 1
S-124	168664	HEAD HOUSES FRAME ELEVATIONS SHEET 2
S-125	168665	HEAD HOUSES FRAME ELEVATIONS SHEET 3
S-126	168666	HEAD HOUSES FRAME ELEVATIONS SHEET 4
S-127	168667	HEAD HOUSES FRAME ELEVATIONS SHEET 5
S-128	168668	PEDESTRIAN BRIDGE FRAMING AND SECTIONS
S-129	168669	PEDESTRIAN BRIDGE BEARING DETAILS
S-130	168670	HEAD HOUSES DECK PLAN AND DETAILS
S-131	168671	HEAD HOUSES PRECAST STAIRS ELEVATIONS AND DETAILS
S-132	168672	HEAD HOUSES MASONRY WALL DETAILS
S-133	168673	STEEL DETAILS SHEET 1
S-134	168674	STEEL DETAILS SHEET 2
S-135	168675	STEEL DETAILS SHEET 3
S-136	168676	STEEL DETAILS SHEET 4
S-137	168677	STEEL DETAILS SHEET 5
S-138	168678	STEEL DETAILS SHEET 6
S-139	168679	STEEL DETAILS SHEET 7
S-140	168680	STEEL DETAILS SHEET 8
S-141	168681	INBOUND ACCESS STRUCTURE FROM MAPLE STREET
S-142	168682	OUTBOUND ACCESS RAMP FROM RAILROAD STREET
S-143	168683	OUTBOUND SECTIONS
S-144	168684	PLATFORM CANOPY DETAILS SHEET 1
S-145	168685	PLATFORM CANOPY DETAILS SHEET 2
S-146	168686	PLATFORM CANOPY DETAILS SHEET 3
S-147	168687	PLATFORM CANOPY DETAILS SHEET 4
S-148	168688	EGRESS RAMP DETAILS
S-149	168689	LIGHT POLE BRACKET DETAILS
S-150	168690	BENCH/WINDSCREEN AND SIGN DETAILS SHEET 1
S-151	168691	BENCH/WINDSCREEN AND SIGN DETAILS SHEET 2
S-152	168692	BENCH/WINDSCREEN AND SIGN DETAILS SHEET 3
S-153	168693	BENCH/WINDSCREEN AND SIGN DETAILS SHEET 4
S-154	168694	EGRESS STAIR DETAILS
S-155	168695	GENERAL STRUCTURAL DETAILS
ELECTRICAL		
ES-1	168700	ELECTRICAL (EXISTING) CONDITIONS PLAN SHEET 1 OF 2
ES-2	168701	ELECTRICAL (EXISTING) CONDITIONS PLAN SHEET 2 OF 2
E-0	168702	ELECTRICAL LEGEND
E-1	168703	ELECTRICAL SITE PLAN - EAST END SHEET 1 OF 2
E-2	168704	ELECTRICAL SITE PLAN - WEST END SHEET 2 OF 2
E-3	168705	FIRST FLOOR - OUTBOUND HEADHOUSE LIGHTING PLAN
E-4	168706	FIRST FLOOR - INBOUND HEADHOUSE LIGHTING PLAN
E-5	168707	SECOND FLOOR - OUTBOUND HEADHOUSE LIGHTING PLAN
E-6	168708	SECOND FLOOR - INBOUND HEADHOUSE LIGHTING PLAN
E-7	168709	FIRST FLOOR - OUTBOUND HEADHOUSE POWER PLAN
E-8	168710	FIRST FLOOR - INBOUND HEADHOUSE POWER PLAN
E-9	168711	SECOND FLOOR - OUTBOUND HEADHOUSE POWER PLAN
E-10	168712	SECOND FLOOR - OUTBOUND HEADHOUSE POWER PLAN
E-11	168713	OUTBOUND CANOPY LIGHTING PLAN
E-12	168714	INBOUND CANOPY LIGHTING PLAN
E-13	168715	OUTBOUND PLATFORM WIRING
E-14	168716	INBOUND PLATFORM WIRING
E-15	168717	DUCTBANK DETAILS
E-16	168718	ELECTRICAL DETAILS
E-17	168719	LIGHTING SCHEMATIC DIAGRAM - SHEET 1
E-18	168720	LIGHTING SCHEMATIC DIAGRAM - SHEET 2
E-19	168721	LIGHTING SCHEMATIC DIAGRAM - SHEET 3
E-20	168722	ELECTRICAL PANEL SCHEDULES - SHEET 1 OF 2
E-21	168723	ELECTRICAL PANEL SCHEDULES - SHEET 2 OF 2
E-22	168724	ELECTRICAL SERVICE DETAILS
E-23	168725	ONE LINE DIAGRAM & LIGHTING CONTROL
E-24	168726	MISCELLANEOUS DETAILS
COMMUNICATIONS		
COM-01	168730	TYPICAL COMMUNICATIONS EQUIPMENT SHELTER OUTSIDE VIEWS
COM-02	168731	TYPICAL COMMUNICATIONS EQUIPMENT SHELTER INSIDE VIEWS
COM-03	168732	TYPICAL COMMUNICATIONS EQUIPMENT SHELTER GROUNDING PLAN
COM-04	168733	NOT USED
COM-05	168734	VARIABLE MESSAGE SIGN SYSTEM DIAGRAM
COM-06	168735	COMMUNICATIONS SYSTEM DIAGRAM
COM-07	168736	FIRST FLOOR - OUTBOUND HEAD HOUSE CCTV PLAN
COM-08	168737	FIRST FLOOR - INBOUND HEAD HOUSE CCTV PLAN

COMMONWEALTH OF MASSACHUSETTS
JONATHAN P. BRUNEAU
CIVIL
No. 46035
REGISTERED PROFESSIONAL ENGINEER
5-21-12

MASSACHUSETTS BAY TRANSPORTATION AUTHORITY

FITCHBURG COMMUTER RAIL LINE
IMPROVEMENT PROJECT
CONTRACT NO. G67CN01

SOUTH ACTON STATION
INDEX OF DRAWINGS

ISSUE	DATE	DESCRIPTION	BY	CHKD.	APP.

HNTB
300 APOLLO DRIVE
CHELMSFORD, MA 01824
(978) 905-4000

PROJECT MANAGER — Date 5/30/12

MASSACHUSETTS BAY TRANSPORTATION AUTHORITY
APPROVED BY: PROJECT MANAGER — Date 6/30/12

JACOBS
343 CONGRESS STREET
BOSTON, MA 02110
(617) 242-9222

HORIZ: NONE	DES. BY	DR. BY	CHK. BY	PLAN NO. 168483	ISSUE
VERT: NONE	JPB	KMB	JM		
DATE: 5/17/12				SHEET G-2	

FILE NAME: P:\MBTA\2008\E2X37800\CAD\700CADD\702STATIONS\South Acton\Civil\PS&E\ G-2 Index of Drawings 100%.dwg
PLOT DATE: May 21, 2012 - 7:09am

GENERAL CIVIL NOTES:

1. THE CONTRACTOR SHALL SET BARRIERS, BARRICADES, WARNING LIGHTS, AND OTHER PROTECTIVE DEVICES THAT ARE NECESSARY, IN THE JUDGMENT OF THE ENGINEER, FOR THE PROTECTION OF THE PUBLIC THROUGHOUT THE STATION AREA, IN ACCORDANCE WITH MBTA ACCESSIBILITY GUIDELINES, MBTA CONSTRUCTION SAFETY MANUAL AND M.U.T.C.D., LATEST EDITIONS.

2. THE CONTRACTOR SHALL VERIFY ALL EXISTING DIMENSIONS AND GRADES IN THE FIELD BEFORE COMMENCING WORK AND PROMPTLY NOTIFY THE ENGINEER OF ANY DISCREPANCIES. WHERE THE INTENT OF THE NEW WORK IS TO MATCH EXISTING CONDITIONS, THE FIELD DATA SHALL GOVERN.

3. EXISTING GRADES SHOWN ON THESE PLANS ARE DERIVED FROM AERIAL PHOTOGRAMMETRY AND THE ACCURACY IS NOT GUARANTEED. ELEVATIONS REFER TO N.A.V.D. 88. WHERE PROPOSED WORK IS TO MEET EXISTING CONDITIONS, THE CONTRACTOR SHALL VERIFY THE INTENDED INTERFACE PRIOR TO ORDERING MATERIALS OR THE START OF CONSTRUCTION OF THAT AREA. PROPOSED GRADES SHALL NOT CREATE FLAT RUN-OFF SURFACES OR SURFACES THAT TRAP WATER. WHERE SUCH A PROBLEM MAY OCCUR, THE CONTRACTOR SHALL NOTIFY THE ENGINEER PRIOR TO CONSTRUCTION OF SUCH.

4. EXISTING UTILITY LINES INDICATED OR NOTED ON THESE DRAWINGS ARE SHOWN AS OBTAINED FROM VARIOUS SOURCES OF INFORMATION AND ARE ONLY APPROXIMATE IN LOCATION. EXISTING UTILITIES OTHER THAN THOSE INDICATED ON THESE DRAWINGS MAY BE ON THE SITE. THE CONTRACTOR IS WARNED TO PROCEED WITH CAUTION WITH ALL WORK, ESPECIALLY EXCAVATION WORK. THE CONTRACTOR IS TO MAKE ALL POSSIBLE INVESTIGATIONS AS TO POTENTIAL UNMARKED UTILITY LINES BEFORE DESIGNING, EXCAVATING, BLASTING, INSTALLING, BACKFILLING, GRADING, PAVEMENT RESTORATION, OR REPAIRING OF UNDERGROUND SYSTEMS. ALL UTILITY COMPANIES PUBLIC AND PRIVATE MUST BE NOTIFIED, INCLUDING THOSE IN CONTROL OF UTILITIES NOT SHOWN ON THESE DRAWINGS. RAILROAD OWNED UNDERGROUND AND OVERHEAD CABLES ARE ALSO IN THE AREA OF THE CONTRACTOR'S CONSTRUCTION ACTIVITIES. THE LOCATION, PROTECTION, REMOVAL OR RELOCATION OF THESE CABLES MUST BE COORDINATED WITH THE RAILROAD OWNERS AND MBTA OPERATING CONTRACTORS BEFORE EXCAVATION IS STARTED. THE CONTRACTOR SHALL BE RESPONSIBLE FOR DETERMINING THE EXACT LOCATION OF ALL UTILITIES WITHIN THE PROJECT AREA AND TO COORDINATE WITH THE AFFECTED UTILITY OWNER FOR PROTECTION OR RELOCATION OF UTILITY PRIOR TO THE START OF THEIR CONSTRUCTION ACTIVITIES. THE CONTRACTOR SHALL NOTIFY DIG-SAFE AT LEAST 72 BUSINESS HOURS BEFORE ANY CONSTRUCTION BEGINS AT 1-888-344-7233. THE ENGINEER ASSUMES NO RESPONSIBILITY FOR DAMAGES INCURRED AS A RESULT OF UTILITIES OMITTED OR INACCURATELY SHOWN. SEE ADDTIONAL UTILITY RELATED NOTES ON THIS PAGE.

5. ALL ITEMS DESIGNATED AS "REMOVE" AND NOT RELOCATED AS PART OF THIS PROJECT, AND DETERMINED TO BE IN SALVAGEABLE CONDITION BY THE ENGINEER, SHALL BE DELIVERED TO MBTA RAILROAD OPERATIONS MATERIAL YARD IN CHARLESTOWN, MA, UNLESS OTHERWISE DIRECTED BY THE ENGINEER. NO DELIVERY WILL BE GREATER THAN 60 MILES, ONE WAY. WHERE ITEMS TO BE REMOVED ARE OWNED BY THE TOWN OF ACTON APPROPRIATE NOTICE TO THE TOWN SHALL BE MADE PRIOR TO DISPOSAL.

6. THE CONTRACTOR SHALL BE RESPONSIBLE FOR LEASING OR OTHERWISE OBTAINING TEMPORARY RIGHTS TO LANDS NOT ALREADY GRANTED EASEMENT RIGHTS BUT DEEMED NECESSARY FOR USE FOR CONSTRUCTION STAGING AND/OR STORING CONSTRUCTION MATERIALS AND EQUIPMENT. SEE RIGHT OF WAY AND PROPERTY PLAN FOR DESIGNATED EASEMENT AREAS.

7. THE CONTRACTOR SHALL COORDINATE ALL CONSTRUCTION ACTIVITIES WITH THE APPROPRIATE AGENCIES OF THE TOWN OF ACTON IN AN EFFORT TO AVOID CONSTRUCTION RELATED IMPACTS TO THE ADJACENT AND ADJOINING AREAS.

8. CONTRACTOR WILL NOT BE ALLOWED TO WORK WITHIN THE "FOUL" AREA OF THE RAILROAD (15 FEET FROM CENTERLINE OF TRACK) WITHOUT FLAGMEN AND/OR TRACK FOREMEN PRESENT FROM THE OPERATING RAILROAD. CONTRACTOR SHALL COORDINATE WITH MBTA RAILROAD OPERATIONS AND MBCR FOR WORK REQUIREMENTS AND RESTRICTIONS.

9. ADDITIONAL NOTES ARE INDICATED ON THE VARIOUS CIVIL, ARCHITECTURAL, STRUCTURAL, ELECTRICAL, AND COMMUNICATIONS PLANS INCLUDED HEREIN.

10. FOR PROJECT-WIDE PURPOSES ON THESE CORRIDOR IMPROVEMENTS, DRAWINGS SHOWN IN VOLUME 1 WILL BE ORIENTED WITH FITCHBURG MAIN LINE BASELINE STATIONING INCREASING FROM LEFT-TO-RIGHT AND THEREFORE IN MOST ALL CASES NORTH WILL BE DIRECTED DOWN.

11. CONTRACTOR SHALL BE RESPONSIBLE FOR OBTAINING ALL NECESSARY STATE AND LOCAL PERMITS (INCLUDING INSPECTIONS AND SIGN-OFFS FROM APPLICABLE TOWN DEPARTMENTS) FOR THE CONSTRUCTION OF SOUTH ACTON STATION.

12. CONTRACTOR SHALL CONTAIN ALL EXCAVATION, EROSION AND SEDIMENTS FROM FOULING TRACKWAYS, WETLANDS, PATHWAYS, PARKING LOTS, PLATFORMS, STREETS, CATCHMENT SYSTEMS AND PRIVATE PROPERTIES THROUGHOUT CONSTRUCTION. SEE SPECIFICATIONS AND EROSION & SEDIMENTATION CONTROL PLANS FOR DETAILS.

13. MAINTAIN ACCESS TO AND OPERATIONS OVER ALL TOWN AND PRIVATE WAYS THROUGHOUT CONSTRUCTION.

UTILITY NOTES:

1. MAINTAIN AND PROTECT ELECTRIC, SIGNAL, COMMUNICATION, PHONE, SEWER AND DRAINAGE SYSTEMS THROUGHOUT CONSTRUCTION. CONTRACTOR TO SUBMIT UTILITY RELOCATION, ABANDONMENT AND PHASING PLAN THAT IS COORDINATED AND APPROVED BY THE RESPECTIVE PUBLIC AND PRIVATE UTILITY JURISDICTIONS FOR ENGINEER'S APPROVAL.

2. RELOCATE OR INSTALL ALL MBTA-RELATED ELECTRIC, SIGNAL AND COMMUNICATION SYSTEMS TO UNDERGROUND CONDUITS AND DUCTBANKS THROUGH THE STATION SITE AS INDICATED. REMOVE AND DELIVER TO MBTA OR TOWN OF ACTON, ALL ABANDONED POLES, LINES, CABINETS, EQUIPMENT AND SUPPORTS WHEN EACH RELOCATION IS COMPLETE. CONTRACTOR SHALL BE RESPONSIBLE TO REMOVE AND DISPOSE OF ALL MATERIALS NOT CLAIMED BY THE MBTA OR TOWN OF ACTON.

3. COORDINATE PUBLIC AND PRIVATE UTILITY ABANDONMENTS AND IMPROVEMENTS WITH ALL OTHER PROPOSED STATION AND TRACKWAY IMPROVEMENT WORK INDICATED IN THESE DOCUMENTS. OBTAIN THE RESPECTIVE PUBLIC AND PRIVATE UTILITY JURISDICTION APPROVALS FOR THIS WORK PRIOR TO THE STAGING PLAN SUBMITTAL AND PRIOR TO WORK. INCLUDE ALL UTILITY WORK WITH THE CONSTRUCTION STAGING PLAN SUBMITTAL. SEE CONSTRUCTION STAGING PLANS FOR ADDITIONAL NOTES.

4. THE EXISTING WATER LINE LOCATIONS AND PROPOSED CONNECTION POINTS IN RAILROAD STREET AND/OR MAPLE STREET SHALL BE VERIFIED AND APPROVED BY THE ACTON WATER DISTRICT. THE PROPOSED WATER LINE SHALL INCLUDE A METER PIT AND YARD HYDRANTS AT EACH PROPOSED PLATFORM. TO PROTECT THE WATER LINE WHERE IT MAY CROSS UNDER THE TRACKS USE A DUCTILE IRON PIPE SLEEVE AS DETAILED ON MBTA STANDARD PLAN NO. 1014.

5. MAINTAIN SITE LIGHTING THROUGHOUT CONSTRUCTION WITHIN THE LIMITS OF WORK AT PRE-CONSTRUCTION LEVELS AND IN ACCORDANCE WITH THE CONSTRUCTION STAGING PLANS AND AS SPECIFIED IN THESE DOCUMENTS. SHIELD AS APPROPRIATE, CONSTRUCTION LIGHTING FROM ADJACENT PROPERTIES THROUGHOUT CONSTRUCTION.

COMMONWEALTH OF MASSACHUSETTS
JONATHAN P. BRUNEAU
CIVIL
No. 46035
REGISTERED PROFESSIONAL ENGINEER
5-21-12

ISSUE	DATE	DESCRIPTION	BY	CHKD.	APP.

JACOBS
343 CONGRESS STREET
BOSTON, MA 02110
(617) 242-9222

MASSACHUSETTS BAY TRANSPORTATION AUTHORITY

FITCHBURG COMMUTER RAIL LINE
IMPROVEMENT PROJECT
CONTRACT NO. G67CN01

SOUTH ACTON STATION
GENERAL NOTES – CIVIL

HNTB
300 APOLLO DRIVE
CHELMSFORD, MA 01824
(978) 905-4000

PROJECT MANAGER — Date 5/30/12

MASSACHUSETTS BAY TRANSPORTATION AUTHORITY
APPROVED BY:
PROJECT MANAGER — Date 6/30/12

HORIZ: NONE	DES. BY	DR. BY	CHK. BY	PLAN NO. 168484
VERT: NONE	JPB	KMB	JM	SHEET G-3
DATE: 5/17/12				

ISSUE

FILE NAME: P:\MBTA\2008\E2X37800\CAD\700CADD\702STATIONS\South Acton\Civil\PS&E\ G-3 General Notes - Civil.dwg
PLOT DATE: May 21, 2012 - 7:08am

LEGEND

EXISTING		PROPOSED	EXISTING		PROPOSED
CB	CATCH BASIN	CB	FA	FIRE ALARM	FA
CBCI	CATCH BASIN w/CURB INLET	CBCI	WB	WASTE BASKET	WB
DI	DROP INLET	DI	12"	TREE (w/ DIA)	12"
Ⓓ	MANHOLE DRAINAGE	Ⓓ	OHW	OVERHEAD WIRES	OHW
Ⓔ	MANHOLE ELECTRIC	Ⓔ	UGASLN-E	UNDERGROUND GAS LINE	UGASLN-P
MH?	MANHOLE UNKNOWN		UWLN-E	UNDERGROUND WATER LINE	UWLN-P
Ⓢ	MANHOLE SEWER	Ⓢ	HCR	HANDICAPPED RAMP	HCR
Ⓣ	MANHOLE TELEPHONE	Ⓣ	CSW	CONCRETE SIDEWALK	CSW
Ⓒ	MANHOLE CABLE	Ⓒ	BCSW	BIT. CONC. SIDEWALK	BCSW
HH	HANDHOLE	HH	BCC	BIT. CONC. CURB	BCC
MHD	MASS HIGHWAY DEPT. HANDHOLE	MHD	BCB	BIT CONC. BERM	BCB
DPW	DEPT. OF PUBLIC WORKS HANDHOLE	DPW	CCB	CAPE COD BERM	CCB
GG	GAS GATE	GG	GC	GRANITE CURB	GC
WG	WATER GATE	WG	EOP	EDGE OF PAVEMENT	EOP
G?	GATE UNKNOWN		CS	CROSSING SIGNAL	CS
	LIGHT POLE		CSG	CROSSING SIGNAL w/ GATE	CSG
UP	UTILITY POLE	UP	CS-PG	CROSSING SIGNAL w/ PED. GATE	CS-PG
UPL	UTILITY POLE w/ LIGHT POLE	UPL	CG	CROSSING GATE ONLY (NO SIGNAL)	CG
SGN	SIGN	SGN	STK	STAKE (PROPERTY LINE MARKER)	STK
	WETLAND FLAG		BOL	BOLLARD	BOL
	HYDRANT		X-ING	RAILROAD CROSSING SIGN	X-ING
	FLAG POLE		CP	CONCRETE PAD	CP
GW	GUY WIRE	GW	SCB	SIGNAL CONTROL BOX	SCB
GP	GUY POLE	GP	ELB	ELECTRIC BOX	ELB
SB	STONE BOUND	SB	MP	MILEPOST	MP
SBDH	STONE BOUND w/ DRILL HOLE	SBDH		GUARD RAIL	
DH	DRILL HOLE	DH		STONE WALL	
GM	GAS METER	GM		PROPERTY LINE	
MB	MAILBOX	MB		LIMIT OF WORK	
TEL	TELEPHONE	TEL		RETAINING WALL	
TS	TRAFFIC SIGNAL	TS	× 190.40	SPOT GRADE (LOCATION OF ELEVATION)	× 190.40
B-7	SOIL BORING LOCATION (TYP)				

NOTE:
THIS LEGEND PERTAINS GENERALLY TO ALL "C" (CIVIL) DRAWINGS.

ABBREVIATIONS

AHD	AHEAD	MP	MILE POST
ASTM	AMERICAN SOCIETY FOR TESTING & MATERIALS	MPH	MILES PER HOUR
APPROX	APPROXIMATE	M.U.T.C.D.	MANUAL ON UNIFORM TRAFFIC CONTROL DEVICES
BIT	BITUMINOUS	N.A.V.D	NORTH AMERICAN VERTICAL DATUM
BL	BASELINE	NIC	NOT IN CONTRACT
BOT	BOTTOM	NO.	NUMBER
BR	BRIDGE	N.T.S.	NOT TO SCALE
BK	BACK	O.C.	ON CENTER
CB	CATCH BASIN	O.D.	OUTSIDE DIAMETER
℄	CENTER LINE	O.H./OH	OVER HEAD
CIP	CAST IRON PIPE	OTM	OTHER TRACK MATERIALS
CLF	CHAIN LINK FENCE	PCMP	PERFORATED CORRUGATED METAL PIPE
CMP	CORRUGATED METAL PIPE	PK/NL	PARKER-KALON COMPANY NAIL
COMM	COMMUNICATION	PSI	POUNDS PER SQUARE INCH
CONC	CONCRETE	PROP	PROPOSED
CONST	CONSTRUCTION	PVC	POLYVINYL CHLORIDE
CP	CONCRETE PAD	RCP	REINFORCED CONCRETE PIPE
C&S	COMMUNICATION & SIGNAL	R/W	RIGHT OF WAY
CULV	CULVERT	RH	RIGHT HAND
DH	DRILL HOLE	ROW	RIGHT OF WAY
DI	DUCTILE IRON	RR SPK	RAILROAD SPIKE
DIA	DIAMETER	RT	RIGHT/ROUTE
DMH	DRAIN MANHOLE	RTE	ROUTE
EL	ELEVATION	SBC	STONE BOX CULVERT
ELEV	ELEVATION	SF	SQUARE FEET
EQN	EQUATION	SMH	SEWER MANHOLE
EX/EXIST	EXISTING	ST.	STREET
FT	FOOT	STA	STATION
HDPE	HIGH DENSITY POLYETHYLENE	STK/NL	STAKE NAIL
HH	HAND HOLE	SWPPP	STORMWATER POLLUTION PREVENTION PLAN
HORIZ	HORIZONTAL	T.C.	TRACK CENTER
INV	INVERT	T/R-T.O.R.	TOP OF RAIL
LH	LEFT HAND	TBR	TO BE REMOVED
LT	LEFT	TYP	TYPICAL
MAX	MAXIMUM	TRK	TRACK
MBCR	MASSACHUSETTS BAY COMMUTER RAIL	UD	UNDERDRAIN
MBTA	MASSACHUSETTS BAY TRANSPORTATION AUTHORITY	WET	WETLAND
MIN	MINIMUM	W/	WITH
M.O.W.	MAINTENANCE OF WAY		

COMMONWEALTH OF MASSACHUSETTS
JONATHAN P. BRUNEAU
CIVIL
No. 46035
REGISTERED PROFESSIONAL ENGINEER
9-21-12

MASSACHUSETTS BAY TRANSPORTATION AUTHORITY

FITCHBURG COMMUTER RAIL LINE
IMPROVEMENT PROJECT
CONTRACT NO. G67CN01

SOUTH ACTON STATION
ABBREVIATIONS AND LEGEND – CIVIL

ISSUE	DATE	DESCRIPTION	BY	CHKD.	APP.

HNTB
300 APOLLO DRIVE
CHELMSFORD, MA 01824
(978) 905-4000

PROJECT MANAGER 5/30/12 Date

MASSACHUSETTS BAY TRANSPORTATION AUTHORITY
APPROVED BY: PROJECT MANAGER 6/30/12 Date

JACOBS
343 CONGRESS STREET
BOSTON, MA 02110
(617) 242-9222

HORIZ: NONE	DES. BY	DR. BY	CHK. BY	PLAN NO. 168485	ISSUE
VERT: NONE	JPB	KMB	JM		
DATE: 5/17/12				SHEET G-4	

FILE NAME: P:\MBTA\2008\E2X37800\CAD\700CADD\702STATIONS\South Acton\Civil\PS&E\ G-4 Abbrv & Legend.dwg
PLOT DATE: May 21, 2012 – 7:10am

GENERAL NOTES

1. SURVEY BASELINE DATA PREPARED BY ASEC CORPORATION, BOSTON, MA.
2. VERTICAL SURVEY CONTROL DATUM IS BASED ON N.G.V.D. OF 1929. PLAN GRID SYSTEM IS BASED ON MASSACHUSETTS COORDINATE SYSTEM ACT OF 1941 - CHAPTER 47 - MAINLAND ZONE.
3. FOR BENCHMARKS SEE SHEETS SC-101 TO SC-156.
4. FOR BORING DATA SEE GEOTECHNICAL DATA REPORT
5. TOPOGRAPHIC AND EXISTING UTILITIES AS SHOWN ON THE CONTRACT DRAWINGS ARE A COMPOSITE OF AERIAL PHOTOGRAMMETRY BY FLI-MAP (JOHN CHANCE LAND SURVEYS, INC., FIELD SURVEY BY ASEC CORPORATION AND UTILITY DATA PROVIDED BY UTILITY COMPANIES.
6. THE INFORMATION SHOWN ON THE DRAWINGS CONCERNING TYPE AND LOCATION OF UNDERGROUND UTILITIES IS NOT GUARANTEED TO BE ACCURATE OR ALL INCLUSIVE. THE CONTRACTOR IS RESPONSIBLE FOR MAKING HIS OR HER OWN DETERMINATION AS TO THE TYPE AND LOCATION OF UNDERGROUND UTILITIES AS MAY BE NECESSARY TO AVOID DAMAGE THERETO.
7. ALL EXISTING UTILITIES SHALL BE MAINTAINED IN PLACE AND KEPT OPERATIONAL DURING CONSTRUCTION EXCEPT AS NOTED ON THE CONTRACT DRAWINGS. ANY NECESSARY DISRUPTION TO OR ABANDONMENT OF EXISTING UTILITIES SHALL BE SUBJECT TO THE APPROVAL OF THE ENGINEER.
8. IT SHALL BE THE RESPONSIBILITY OF THE CONTRACTOR TO NOTIFY ALL UTILITY COMPANIES AND CITIES/TOWNS THAT MAY BE AFFECTED BY ANY PORTION OF THIS CONSTRUCTION AND TO COORDINATE ALL WORK INVOLVING UTILITY COMPANY OR CITY/TOWN FACILITIES, WHETHER THOSE FACILITIES BE EXISTING OR PROPOSED. IT IS ALSO THE RESPONSIBILITY OF THE CONTRACTOR TO SUPPORT AND PROTECT EXISTING UTILITIES IN AND AROUND EXCAVATIONS, AND IN PARTICULAR, WHEN CROSSING UNDER OR OVER ANY DUCT OR PIPE. ALL PROTECTIVE MEASURES OR SUPPORTS SHALL BE CONSIDERED INCIDENTAL WORK AND SHALL BE INCLUDED IN THE UNIT PRICE BID FOR THE ITEM BEING INSTALLED.
9. IF A STRUCTURE TO BE ABANDONED IS FOUND TO HAVE ADDITIONAL INLET PIPES OF UNKNOWN ORIGIN, OTHER THAN THOSE SHOWN, THE CONTRACTOR SHALL NOTIFY THE ENGINEER IMMEDIATELY TO DETERMINE DISPOSITION, PRIOR TO PERFORMING ANY WORK ON THE STRUCTURE.
10. EXISTING UTILITY OR DRAINAGE FACILITIES CALLED FOR TO BE RELOCATED, RECONSTRUCTED, REMOVED, OR ABANDONED SHALL BE VERIFIED WITH THE RESPECTIVE CONTROLLING AUTHORITY AS TO THEIR FINAL DISPOSITION.
11. ALL ABOVE GRADE STRUCTURES, POLES, TRANSFORMERS, ETC. TO BE RELOCATED SHALL BE PLACED AT THE REQUIRED M.B.T.A. STANDARD CLEARANCE FROM THE CENTERLINE OF ANY TRACK.
12. ALL UTILITY SURFACE CASTINGS (COVERS, GRATES, GATE BOXES, ETC.) TO REMAIN, SHALL BE ADJUSTED TO THE NEW SURFACE GRADE AS REQUIRED, WHETHER OR NOT CALLED FOR IN THE PLANS.
13. THE CONTRACTOR SHALL VERIFY ALL HORIZONTAL STATIONS AND OFFSETS AND ALL VERTICAL ELEVATIONS OF PROPOSED WORK PRIOR TO THE START OF CONSTRUCTION.
14. UNLESS OTHERWISE NOTED ON THE DRAWINGS, THE CONTRACTOR SHALL REMOVE AND STACK AT LOCATIONS DESIGNATED IN THE SPECIFICATIONS ALL EXISTING TRACK, RAILROAD SIGNAL EQUIPMENT, RAILROAD POLE LINE, AND ALL OTHER RAILROAD EQUIPMENT WITHIN THE M.B.T.A RIGHT-OF-WAY. THE CONTRACTOR SHALL VERIFY ALL ITEMS FOR REMOVAL WITH THE ENGINEER PRIOR TO ANY WORK.
15. UNLESS OTHERWISE NOTED ON THE CONTRACT DRAWINGS OR DIRECTED BY THE ENGINEER, EXISTING FENCES AND STONE WALLS ALONG THE M.B.T.A. RIGHT-OF-WAY LINES SHALL REMAIN.
16. UNLESS OTHERWISE NOTED ON THE CONTRACT DRAWINGS OR DIRECTED BY THE ENGINEER, STRUCTURES ENCROACHING ON THE M.B.T.A. RIGHT-OF-WAY SHALL REMAIN OR BE REMOVED BY THE PROPERTY OWNER.
17. WORK LABELED 'PROP' IS WORK TO BE COMPLETED UNDER THIS CONTRACT OR BY OTHERS DURING THE CONTRACT DURATION. WORK LABELED 'FUTURE' IS WORK TO BE DONE AT A LATER DATE AND IS NOT PART OF THIS CONTRACT.
18. PROFILE GRADE LINE IS THE TOP OF LOW RAIL IN ALL CASES.
19. ALL WORK SHALL BE IN ACCORDANCE WITH MW-1, M.B.T.A. CONSTRUCTION STANDARDS AND THE M.B.T.A. RAILROAD OPERATIONS BOOK OF STANDARD PLANS DATED JANUARY 5, 1996 AND THE LATEST REVISIONS UNLESS OTHERWISE NOTED ON THE CONTRACT DRAWINGS OR SPECIFICATIONS.
20. DITCH AND SUBDRAIN SLOPES SHALL BE GRADED CONTINUOUSLY AND EVENLY BETWEEN THE INVERT ELEVATIONS SHOWN ON THE PLANS.
21. THE WORK SHALL BE COORDINATED WITH PAN AM RAIL AND M.B.T.A. WEEKDAY FREIGHT TRAINS AND M.B.T.A. COMMUTER RAIL SERVICE WILL CONTINUE TO OPERATE ON SCHEDULES ALTERED TO PROVIDE WORK WINDOWS.
22. PROVIDE SNOW FLANGER SIGNS AND SIGN POSTS PER M.B.T.A. STANDARD DRAWING NO. 3304 AT ALL GRADE CROSSINGS, TURNOUTS, UNDERGRADE BRIDGES (EXCEPT ARCH BRIDGES), PLATFORMS, AND AT OTHER LOCATIONS AS DIRECTED BY THE ENGINEER.
23. PROVIDE MILEPOST SIGNS PER MBTA STANDARD DRAWING NO. 3302 AT ALL GRADE CROSSINGS, BRIDGES, CULVERTS, AND INTERLOCKINGS. SIGNS AT CULVERTS HAVE NOT BEEN CALLED OUT ON THE DRAWINGS.
24. WHISTLE POSTS, REPEAT WHISTLE POSTS, AND SPEED RESTRICTION SIGNS INDICATED ON THE DRAWINGS ON THE LEFT SIDE OF THE PROPOSED TRACK(S) SHALL BE INSTALLED FACING WESTERLY. THOSE ON THE RIGHT SIDE SHALL BE INSTALLED FACING EASTERLY.
25. ADJUST INDUSTRIAL SIDING ALIGNMENTS AND PROFILES AS DIRECTED OR APPROVED BY THE ENGINEER TO MEET EXISTING TRACK.
26. ALL EXISTING U.S.G.S. DISKS, HIGHWAY BOUNDS, RAILROAD MONUMENTS, PROPERTY BOUNDS, AND TOWN BOUNDS SHALL BE PROTECTED AND RAISED TO FINISHED GRADE AS REQUIRED. U.S.G.S. DISKS AND TOWN BOUNDS WILL BE ADJUSTED BY U.S.G.S. AND M.H.D. RESPECTIVELY. ANY DAMAGE TO U.S.G.S. DISKS SHALL BE IMMEDIATELY REPORTED TO THE ENGINEER AND THE U.S. GEOLOGICAL SURVEY AND SHALL BE REPAIRED AT NO COST TO THE AUTHORITY. ANY DAMAGE TO TOWN BOUNDS SHALL BE IMMEDIATELY REPORTED TO THE ENGINEER AND M.H.D. AND SHALL BE REPAIRED AT NO COST TO THE AUTHORITY. THE CONTRACTOR SHALL INVENTORY ALL SUCH BOUNDS, DISKS, AND MONUMENTS PRIOR TO THE START OF ANY WORK.
27. ALL CROSS SECTIONS HAVE BEEN DRAWN AS WOOD TIE SECTIONS. IF REQUIRED INSTALL CONCRETE TIES AT LOCATIONS NOTED ON THE MATERIAL LOCATION PLANS IN ACCORDANCE WITH THE TYPICAL SECTIONS FOR CONCRETE TIE TRACK MAINTAINING THE PROPOSED TOP OF RAIL INDICATED ON THE PROFILES.
28. ALL CROSS SECTIONS DRAWN WITH NO SUPERELEVATION. CONSTRUCT SECTIONS ON CURVES AND SPIRALS IN ACCORDANCE WITH THE TYPICAL SECTIONS FOR CURVED TRACK.
29. THE CONTRACTOR SHALL COORDINATE WITH CITY/TOWN OFFICIALS AND SHALL PREPARE A TRAFFIC MAINTENANCE PLAN TO BE SUBMITTED TO THE ENGINEER FOR APPROVAL FOR EACH GRADE CROSSING PRIOR TO BEGINNING WORK.
30. HORIZONTAL CLEARANCES SHOWN ON THE CONTRACT DRAWINGS ARE THE MINIMUM CLEARANCE FOR EACH STRUCTURE. VERTICAL CLEARANCES SHALL BE MEASURED IN ACCORDANCE WITH M.B.T.A STANDARD PLAN NO. 1016.
31. THE CONTRACTOR SHALL CLEAN AND REMOVE ALL DEBRIS, SAND, AND OTHER MATERIAL FROM ALL CATCH BASIS, MANHOLES, AND DRAIN PIPES THAT ARE WITHIN THE LIMITS OF WORK INCLUDING ALL ROADWAY AND GRADE CROSSING DRAINAGE STRUCTURES.
32. ALL TEMPORARY CONSTRUCTION EASEMENT AREAS DISTURBED BY CONSTRUCTION SHALL BE RESTORED TO THE ORIGINAL CONDITIONS UNLESS OTHERWISE NOTED.
33. IT IS THE CONTRACTOR'S RESPONSIBILITY TO COORDINATE THE VARIOUS ASPECTS OF THESE DOCUMENTS. ANY PARTIAL USE OF THESE DOCUMENTS IS AT THE RISK OF THE CONTRCTOR.
34. RIGHT-OF-WAY IS APPROXIMATE AND SCALED FROM AVAILABLE VAL PLANS. RIGHT-OF-WAY LIMITS SHALL BE FIELD VERIFIED BY CONTRACTOR AS NECESSARY.
35. ALL WORK SHALL BE PERFORMED IN ACCORDANCE WITH THE ORDERS OF CONDITIONS ISSUES BY THE LOCAL CONSERVATION COMMISION HAVING JURISDICTION OVER THE WORK AREA.

COMMONWEALTH OF MASSACHUSETTS
ERIC C. DIVIRGILIO
CIVIL
No. 46256
REGISTERED PROFESSIONAL ENGINEER
5-17-2012

MASSACHUSETTS BAY TRANSPORTATION AUTHORITY

FITCHBURG COMMUTER RAIL LINE
IMPROVEMENT PROJECT
CONTRACT NO. G67CN01

GENERAL NOTES – TRACK

ISSUE	DATE	DESCRIPTION	BY	CHKD.	APP.

HNTB
300 APOLLO DRIVE
CHELMSFORD, MA 01824
(978) 905-4000

PROJECT MANAGER 5/30/12 Date

MASSACHUSETTS BAY TRANSPORTATION AUTHORITY
APPROVED BY: 6/30/12
PROJECT MANAGER Date

HORIZ: AS SHOWN	DES. BY	DR. BY	CHK. BY	PLAN NO. 168486	ISSUE
VERT: AS SHOWN	DJK	DJK	ECD		
DATE: 5/17/12				SHEET G-5	

PLOT DATE: 15-MAY-2012
FILE NAME: \\exw00\pmwork\JOBS\43919 Fitchburg commuter rail\TECHPROD\Cadd\Track\Sheets\South Acton Contractor\GN-005P30.dgn
XREF FILES:

SURVEY CONTROL POINT LEGEND

- PK NAIL
- STK/NAIL
- REBAR
- DISC
- DH
- X-CUT
- RR SPIKE

WETLAND LEGEND

- WETLAND FLAG
- Edge of Wetland
- 100' Wetland Buffer Zone
- Top of Bank / Mean Annual High Water
- Inner Riparian Zone
- Outer Riparian Zone
- Vernal Pool Boundary
- 100' Vernal Pool Habitat
- MNHESP Rare Species Polygon

TRACK AND ROAD LEGEND

- PROPOSED TRACK
- SHIFTED TRACK
- REALIGNED TRACK
- FUTURE TRACK WORK
- UD — UNDER DRAIN
- DITCH
- EXISTING TRACK
- EXISTING RIGHT OF WAY
- X X — STRAW BALE / SILT FENCE
- TEMPORARY EASEMENT
- PERMANENT EASEMENT
- REMOVE TRACK
- EXISTING ACCESS ROAD
- PROPOSED ACCESS ROAD

CROSS SECTIONS LEGEND

- FENCE
- TREE

SURVEY LEGEND

CB	CATCH BASIN
CBCI	CATCH BASIN w/ CURB INLET
DI	DROP INLET
D	MANHOLE DRAINAGE
E	MANHOLE ELECTRIC
MH?	MANHOLE UNKNOWN
S	MANHOLE SEWER
T	MANHOLE TELEPHONE
C	MANHOLE CABLE
HH	HANDHOLE
MHD	MASS HIGHWAY DEPT. HANDHOLE
DPW	DEPT. OF PUBLIC WORKS HANDHOLE
GG	GAS GATE
WG	WATER GATE
G?	GATE UNKNOWN
	LIGHT POLE
UP	UTILITY POLE
UPL	UTILITY POLE w/ LIGHT POLE
SGN	SIGN
	WETLAND FLAG
	HYDRANT
	FLAG POLE
GW	GUY WIRE
GP	GUY POLE
SB	STONE BOUND
SBDH	STONE BOUND w/ DRILL HOLE
DH	DRILL HOLE
GM	GAS METER
MB	MAILBOX
TEL	TELEPHONE
TS	TRAFFIC SIGNAL
FA	FIRE ALARM
WB	WASTE BASKET
12"	TREE (w/ DIA)
OHW	OVERHEAD WIRES
UGASLN-E	UNDERGROUND GAS LINE
UWLN-E	UNDERGROUND WATER LINE
HCR	HANDICAPPED RAMP
CSW	CONCRETE SIDEWALK
BCSW	BIT. CONC. SIDEWALK
BCC	BIT. CONC. CURB
BCB	BIT CONC. BERM
SGE	SLOPED GRANITE EDGING
GC	GRANITE CURB
EOP	EDGE OF PAVEMENT
CS	CROSSING SIGNAL
CSG	CROSSING SIGNAL w/ GATE
CS-PG	CROSSING SIGNAL w/ PED. GATE
CG	CROSSING GATE ONLY (NO SIGNAL)
SPK	STAKE (PROPERTY LINE MARKER)
BOL	BOLLARD
X-ING	RAILROAD CROSSING SIGN
CP	CONCRETE PAD
SCB	SIGNAL CONTROL BOX
ELB	ELECTRIC BOX
MP	MILEPOST
	GUARD RAIL
	STONE WALL
112x12	SPOT GRADE (LOCATION OF ELEVATION)

ABBREVIATIONS

AHD	AHEAD
BP	BEAN POLE
BR	BRIDGE
BK	BACK
℄	CENTER LINE
CIP	CAST IRON PIPE
CLF	CHAIN LINK FENCE
CMP	CORRUGATED METAL PIPE
CULV.	CULVERT
DH	DRILL HOLE
DIA.	DIAMETER
DMH	DRAIN MANHOLE
EL	ELEVATION
ELEV	ELEVATION
ELT	END OF LONG TIMBER
EPLP	EXCRUSION PLUG LEAD PLUG
EQN	STATION EQUATION
EXIST	EXISTING
FT	FOOT
GGR	GAS GATE GROUND
HH	HAND HOLD
LH	LEFT HAND TURNOUT
MIN	MINIMUM
M-O-W	MAINTENANCE OF WAY
MP	MILE POST
MPH	MILES PER HOUR
NIC	NOT IN CONTRACT
NO.	NUMBER
O.H.	OVER HEAD BRIDGE
OTM	OTHER TRACK MATERIALS
PK/NL	PARKER-KALON COMPANY NAIL
PROP	PROPOSED
PVC	POLYVINYL CHLORIDE
R/W	RIGHT OF WAY
RH	RIGHT HAND TURNOUT
ROW	RIGHT OF WAY
RR SPK	RAILROAD SPIKE
RTE	ROUTE
SBC	STONE BOX CULVERT
SF	SQUARE FEET
SMH	SEWER MANHOLE
ST.	STREET
STA/STA.	STATION

ABBREVIATIONS CONTINUED

STK/NL	STAKE NAIL
T.C.	TRACK CENTER
T/R	TOP OF RAIL
TBR	TO BE REMOVED
TYP	TYPICAL
TRK	TRACK
WET	WETLAND

COMMONWEALTH OF MASSACHUSETTS
ERIC C. DIVIRGILIO
CIVIL
No. 46256
REGISTERED PROFESSIONAL ENGINEER
5-17-2012

MASSACHUSETTS BAY TRANSPORTATION AUTHORITY

FITCHBURG COMMUTER RAIL LINE
IMPROVEMENT PROJECT
CONTRACT NO. G67CN01

ABBREVIATIONS AND LEGENDS – TRACK

ISSUE	DATE	DESCRIPTION	BY	CHKD.	APP.

HNTB
300 APOLLO DRIVE
CHELMSFORD, MA 01824
(978) 905-4000

PROJECT MANAGER — Date 5/18/12

MASSACHUSETTS BAY TRANSPORTATION AUTHORITY
APPROVED BY: PROJECT MANAGER — Date 6/30/12

HORIZ: AS SHOWN	DES. BY	DR. BY	CHK. BY	PLAN NO. 168487
VERT: AS SHOWN	SS	SS	ECD	
DATE: 5/17/12				SHEET G-6

ISSUE

PLOT DATE: 15-MAY-2012
FILE NAME: \\exwx00\pmwork\JOBS\43919 Fitchburg commuter rail\TECHPROD\Cadd\Track\Sheets\South Acton Contractor\GN-006P30.dgn
XREF FILES:

HORIZONTAL ALIGNMENT DEFINITIONS

A	DISTANCE BETWEEN CENTERS OF CIRCLE
CC	CENTER OF CIRCLE
CS	CURVE TO SPIRAL
Dc	DEGREE OF CURVE DEFINED BY THE CHORD DEFINITION
Ec	EXTERNAL DISTANCE FROM MIDPOINT OF CIRCULAR CURVE TO PIC
I	ANGLE OF INTERSECTION OF MAIN TANGENTS AT PI
Lc	LENGTH OF CIRCULAR CURVE BETWEEN SC AND CS
Ls	LENGTH OF SPIRAL FROM TS TO SC (OR CS TO ST)
L.T.	LONG TANGENT OF SPIRAL; DISTANCE FROM PIS TO TS (OR PIS TO ST)
o	OFFSET FROM PC (OR PT) TO MAIN TANGENT
PC	POINT OF CURVE; ON SPIRALED CURVES THIS POINT IS OFFSET A DISTANCE "o" FROM THE MAIN TANGENT
PCC	POINT OF COMPOUND CURVATURE
PI	POINT OF INTERSECTION OF MAIN TANGENTS
PIC	POINT OF INTERSECTION OF LINES TANGENT AT SC AND CS
PIS	POINT OF INTERSECTION OF MAIN TANGENT AND LINE TANGENT AT SC (OR CS)
PS	POINT OF SWITCH
PT	POINT OF TANGENCY; ON SPIRALED CURVES THIS POINT IS OFFSET A DISTANCE "o" FROM THE MAIN TANGENT
R	RADIUS OF CIRCULAR CURVE
SC	SPIRAL TO CURVE
ST	SPIRAL TO TANGENT
S.T.	SHORT TANGENT OF SPIRAL; DISTANCE FROM PIS TO CS (OR PIS TO SC)
Tc	DISTANCE FROM SC (OR CS) TO PIC IN SPIRALED CURVE, OR TANGENT FROM PC (OR PT) TO PI IN A SIMPLE CURVE
TS	TANGENT TO SPIRAL
Xo	DISTANCE ALONG MAIN TANGENT FROM TS (OR ST) TO PERPENDICULAR OFFSET OF PC
X	DISTANCE ALONG MAIN TANGENT FROM TS (OR ST) TO PERPENDICULAR OFFSET OF SC (OR CS)
Y	PERPENDICULAR OFFSET FROM MAIN TANGENT TO CS (OR SC)
Δs	SPIRAL ANGLE; CENTRAL ANGLE OF SPIRAL
Δc	ANGLE OF INTERSECTION OF TANGENTS OF CIRCULAR CURVE ONLY

MAIN TANGENTS – THOSE LINES TANGENT TO ALIGNMENT AT TS AND ST WHICH INTERSECT AT PI

SPEED/SUPERELEVATION DATA

V	DESIGN SPEED IN MPH
Ea	ACTUAL SUPERELEVATION
Ee	TOTAL SUPERELEVATION
Eu	UNBALANCED SUPERELEVATION

VERTICAL ALIGNMENT DEFINITIONS

G1	INCOMING GRADE
G2	OUTGOING GRADE
LVC	LENGTH OF VERTICAL CURVE IN 100 FOOT STATIONS
PVC	POINT OF VERTICAL CURVATURE
PVI	POINT OF INTERSECTION OF GRADES
PVT	POINT OF VERTICAL TANGENCY
r	PERCENT RATE OF CHANGE OF GRADE PER 100 FEET

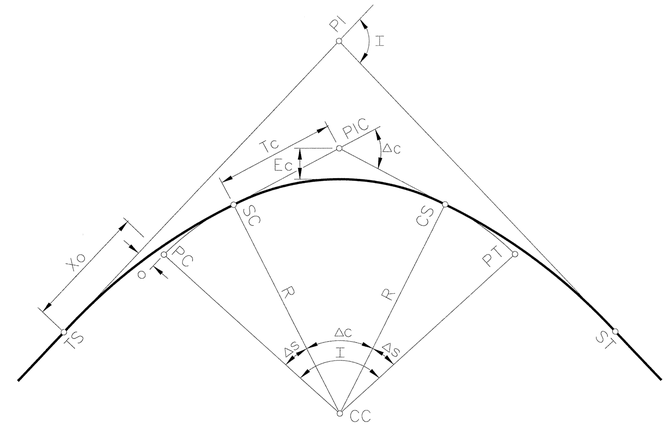

CIRCULAR CURVE WITH SPIRALS

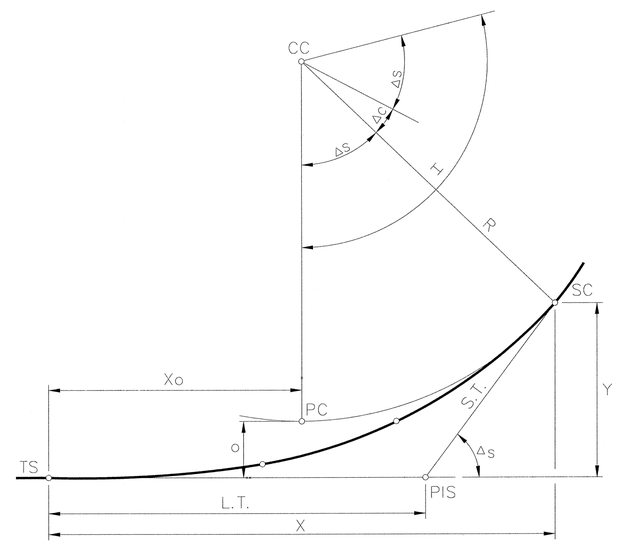

SPIRAL

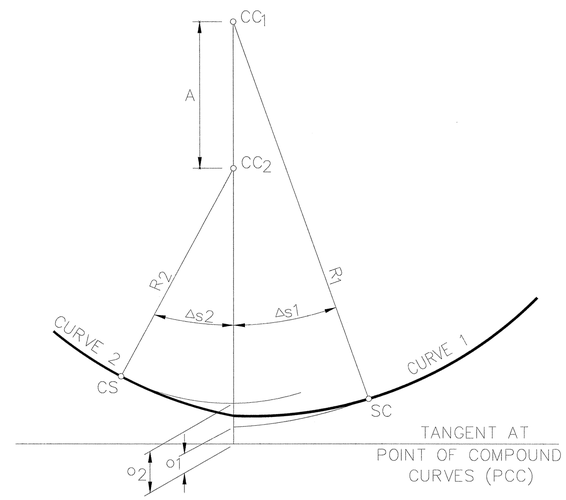

COMPOUND SPIRAL

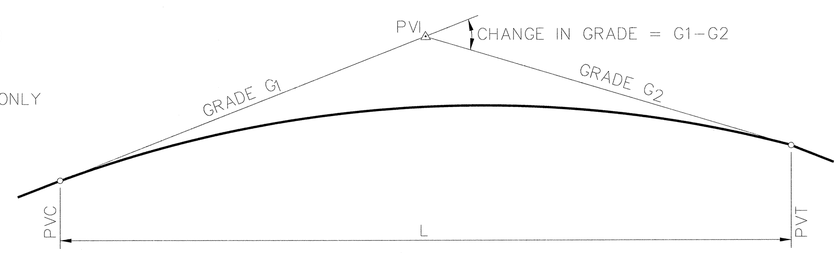

VERTICAL CURVE

TURNOUT

COMMONWEALTH OF MASSACHUSETTS
ERIC C. DIVIRGILIO
CIVIL
No. 46256
REGISTERED PROFESSIONAL ENGINEER
5-17-2012

MASSACHUSETTS BAY TRANSPORTATION AUTHORITY

FITCHBURG COMMUTER RAIL LINE
IMPROVEMENT PROJECT
CONTRACT NO. G67CN01

CURVE DEFINITIONS
AND GEOMETRY

ISSUE	DATE	DESCRIPTION	BY	CHKD.	APP.

HNTB
300 APOLLO DRIVE
CHELMSFORD, MA 01824
(978) 905-4000

PROJECT MANAGER 5/30/12 Date

MASSACHUSETTS BAY TRANSPORTATION AUTHORITY
APPROVED BY:
PROJECT MANAGER 6/30/12 Date

HORIZ: AS SHOWN	DES. BY KP	DR. BY KP	CHK. BY ECD	PLAN NO. 168488
VERT: AS SHOWN				
DATE: 5/17/12				SHEET G–7

ISSUE

PLOT DATE: 15-MAY-2012
FILE NAME: \\lexw00\pmwork\JOBS\43919 Fitchburg commuter rail\TECHPROD\Cadd\Track\Sheets\South Acton Contractor\GN-007P30.dgn
XREF FILES:

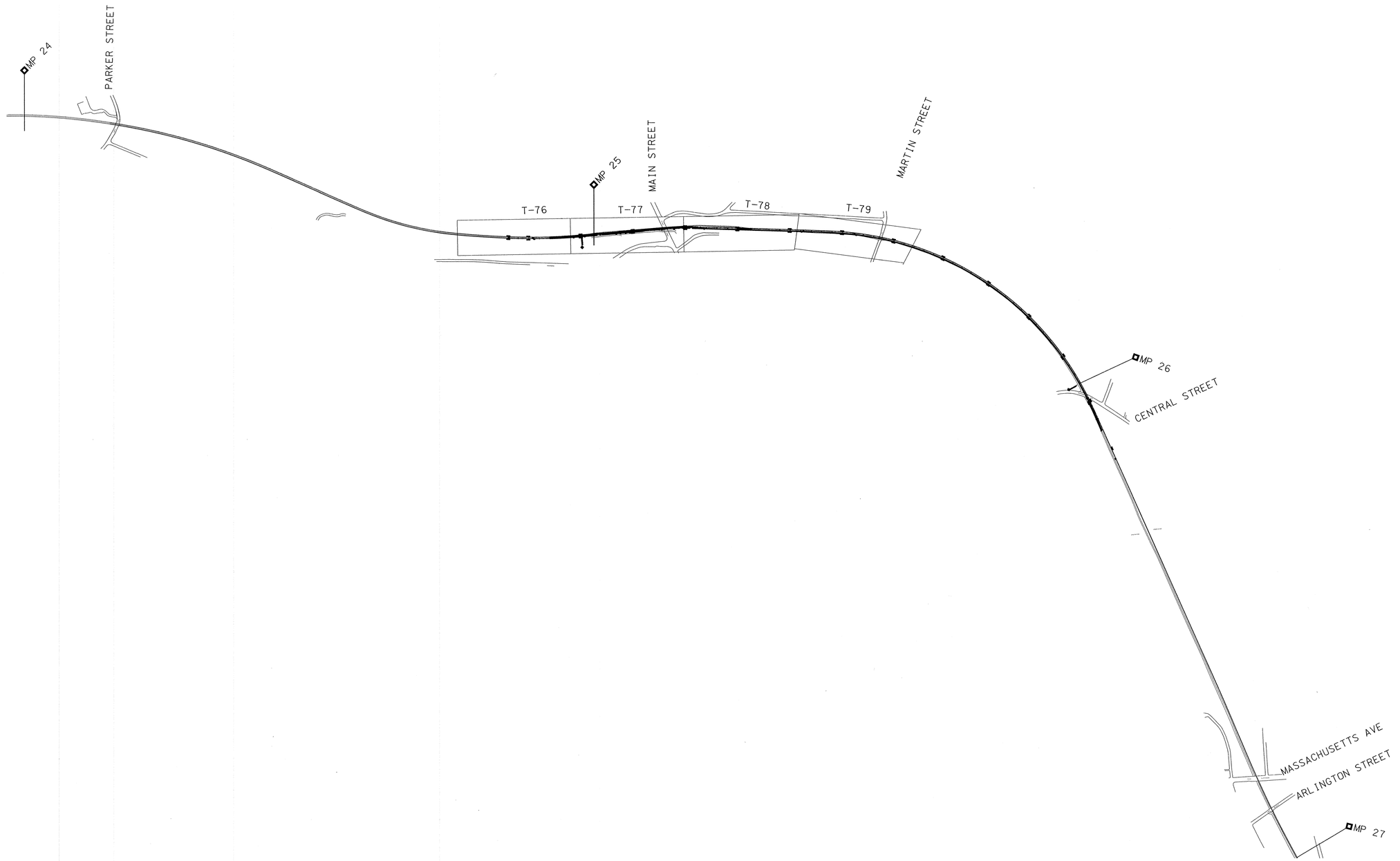

HORIZ. 500 0 500 1000

(SCALE IN FEET)

COMMONWEALTH OF MASSACHUSETTS
ERIC C. DIVIRGILIO
CIVIL
No. 46256
REGISTERED PROFESSIONAL ENGINEER
5-17-2012

MASSACHUSETTS BAY TRANSPORTATION AUTHORITY

FITCHBURG COMMUTER RAIL LINE
IMPROVEMENT PROJECT
CONTRACT NO. G67CN01

KEY PLAN
MP 24 TO MP 27

ISSUE	DATE	DESCRIPTION	BY	CHKD.	APP.

HNTB
300 APOLLO DRIVE
CHELMSFORD, MA 01824
(978) 905-4000

PROJECT MANAGER 5/30/12 Date

MASSACHUSETTS BAY TRANSPORTATION AUTHORITY
APPROVED BY:
PROJECT MANAGER 6/30/12 Date

HORIZ: AS SHOWN	DES. BY: KP	DR. BY: KP	CHK. BY: ECD
VERT: AS SHOWN			
DATE: 5/17/12			

PLAN NO. 168489

SHEET KP-3

ISSUE

PLOT DATE: 15-MAY-2012
FILE NAME: \\texw00\pmwork\JOBS\43919 Fitchburg commuter rail\TECHPROD\Cadd\Track\Sheets\South Acton Contractor\TR-KP-003P60.dgn
XREF FILES:

POINT	NORTHING	EASTING	ELEV	DESCRIPTION	FBK/PG
190	3021417.46	591828.82	378.95	PK-GPS	474/59
191	3021145.78	591986.18	377.75	STK/NL-GPS	474/59
~~505~~	~~3021770.25~~	~~652303.30~~	~~225.56~~	~~POLFROM1002-3006o~~	
1000	3014269.87	655520.68	243.97	PK-GPS	474/51
1001	3014493.99	655587.30	253.93	PK-GPS	474/51
1002	3021477.88	652564.14	226.84	REBAR	474/53
1003	3020713.21	653142.16	228.92	REBAR	474/53
1004	3020387.77	653300.14	228.23	REBAR	474/53
1005	3000604.37	662453.23	211.91	PK	474/45
1006	3001081.08	662142.47	211.14	PK	474/46
1007	3012277.74	656243.24	248.32	REBAR	474/49
1008	3011146.95	656765.09	249.43	REBAR	474/49
1009	3028382.54	644924.83	231.43	REBAR	474/63
1010	3028339.57	644562.18	232.65	PK	474/63
1011	3028268.02	645763.30	229.35	REBAR	474/62
1012	3028197.70	646002.31	229.57	RR SPK	474/61
~~1013~~	~~3028104.06~~	~~646285.40~~	~~228.97~~	~~REBAR~~	
1014	3027887.22	646578.77	227.55	REBAR	474/61
1015	3027660.60	646899.40	228.28	REBAR	474/61
1016	3028249.76	643744.59	234.10	REBAR	474/64
1017	3028189.69	643197.04	234.85	PK	474/64
1018	2972888.89	704563.61	188.49	REBAR	472/24
1019	2972355.81	704509.94	185.23	REBAR	472/10
1020	2957046.85	721454.10	88.79	X-CUT/HH	472/67
1021	2957021.66	721123.07	89.96	PK	472/68
1022	2956968.48	720789.51	92.30	PK	464/18
1023	2957081.79	720397.21	93.47	RR/SPK	464/18
1024	2957148.88	720077.24	94.86	PK	472/68
1025	2957215.31	719892.13	96.25	REBAR	472/68
1026	2957609.01	722469.23	78.14	REBAR	472/67
1027	2959760.31	717943.64	93.90	REBAR	463/22
1028	2960366.27	717678.89	93.36	REBAR	463/23
1029	2959971.91	717872.79	93.78	REBAR	463/22
1030	2959692.09	718012.29	93.96	REBAR	463/22
1031	2962759.37	730786.66	35.74	REBAR	472/61
1032	2962907.57	730933.32	38.35	PK	472/61
1033	2962217.56	729967.33	42.65	REBAR	472/62
1034	2962088.99	729647.99	40.76	REBAR	472/63
1035	2969516.22	745650.86	28.41	PK	472/58
1036	2969525.42	745228.97	31.26	STK/NL-GPS	472/58
1037	2969467.52	745687.16	26.56	REBAR	472/57
1038	2977783.00	702187.34	199.32	REBAR	474/5
1039	2978306.98	701896.40	195.97	REBAR	474/5

POINT	NORTHING	EASTING	ELEV	DESCRIPTION	FBK/PG
1040	2978686.69	701656.85	192.40	REBAR	474/5
1041	2979162.02	701425.62	189.94	REBAR	474/5
1042	2979605.75	701152.27	186.10	STK/NL	474/6
1043	2979930.03	701001.64	185.90	STK/NL	474/6
1044	2980651.97	700575.54	182.16	REBAR	474/7
1045	2980907.64	700480.97	181.46	STK/NL	474/7
1046	2981209.60	700269.29	180.00	REBAR	474/7
1047	3023395.69	607442.17	327.84	REBAR	465/30
1048	3023034.83	606301.61	333.07	STK/NL	465/31
1049	2961710.45	728376.51	43.73	REBAR	472/64
1050	2961519.46	727669.82	45.83	PK	472/64
1051	2961419.83	727113.98	46.74	PK	472/65
1052	2961338.12	726846.25	47.43	PK	472/65
1053	2961664.98	769948.63	9.86	RR SPK	465/53
1054	2961719.85	769667.95	9.54	RR SPK	465/54
1055	2961974.48	769082.40	8.98	PM ON RAIL POST	465/54
1056	2961957.73	768780.95	8.22	DH IN CONC. PAD	465/54
1057	2964876.24	735801.55	52.41	STK/NL	465/65
1058	2965009.93	736155.21	54.31	STK/NL	465/65
1059	2964108.65	733424.33	39.56	REBAR	465/72
1060	2963841.30	732673.92	38.61	STK/NL	465/72
1061	2963672.22	732154.50	39.54	REBAR	465/72
1062	2962156.11	716042.44	94.80	REBAR	466/35
1063	2992817.00	667436.22	204.18	PK	474/41
~~1064~~	~~2992641.71~~	~~667428.12~~	~~197.52~~	~~PK~~	
1065	2964841.88	713638.11	108.16	X-CUT ON ROCK OUTCROP	466/42
1066	2964206.71	714121.19	101.21	REBAR	466/42
1067	3023741.54	616522.72	280.48	REBAR	474/72
1068	3023885.85	617013.20	277.66	REBAR	474/72
1069	3023983.23	617374.42	276.04	REBAR	474/72
1070	3023925.98	617341.97	276.88	STK/NL	474/72
1071	3024001.44	611128.76	299.37	REBAR	474/71
1072	3028215.05	588102.01	381.62	REBAR	472/41
1073	3028837.50	587813.79	380.29	REBAR	472/42
1074	3029154.63	587628.02	377.90	REBAR	472/42
1075	3029465.33	587393.14	377.66	REBAR	472/43
1076	3029762.56	587113.18	375.64	STK/NL	472/43
1077	3028231.27	588147.75	381.48	STK/NL	472/41
1078	2969097.63	742767.52	47.30	STK/NL-GPS	472/59
1079	2969242.65	742924.99	47.15	STK/NL-GPS	472/59
1080	2965728.52	713121.59	108.78	STK/NL	469/09
1081	2968464.25	711308.01	132.31	STK/NL	472/74
1082	2968658.66	711078.28	134.79	STK/NL	472/74

COMMONWEALTH OF MASSACHUSETTS
ERIC C. DIVIRGILIO
CIVIL
No. 46256
REGISTERED PROFESSIONAL ENGINEER
5-17-2012

MASSACHUSETTS BAY TRANSPORTATION AUTHORITY

FITCHBURG COMMUTER RAIL LINE
IMPROVEMENT PROJECT
CONTRACT NO. G67CN01

SURVEY CONTROL POINTS
MASTER SHEET 2

ISSUE	DATE	DESCRIPTION	BY	CHKD.	APP.

HNTB
300 APOLLO DRIVE
CHELMSFORD, MA 01824
(978) 905-4000

PROJECT MANAGER — Date 5/30/12

MASSACHUSETTS BAY TRANSPORTATION AUTHORITY
APPROVED BY:
PROJECT MANAGER — Date 6/30/12

HORIZ: AS SHOWN	DES. BY: KP	DR. BY: KP	CHK. BY: ECD	PLAN NO. 168490
VERT: AS SHOWN				SHEET SC-2
DATE: 5/17/12				

ISSUE

PLOT DATE: 15-MAY-2012
FILE NAME: \\lexw00\pmwork\JOBS\43919 Fitchburg commuter rail\TECHPROD\Cadd\Track\Sheets\South Acton Contractor\Survey Control_Master2.dgn
XREF FILES:

POINT	NORTHING	EASTING	ELEV	DESCRIPTION	FBK/PG
1083	2969033.11	710405.59	137.69	STK/NL	472/73
1084	2968887.23	710685.44	135.27	PK	472/73
1085	2992622.40	669955.51	189.88	STK/NL	474/28
1086	2992880.00	667054.64	202.46	REBAR	469/33
1087	2991848.39	685679.89	116.66	PK	474/12
1088	2991698.94	685668.01	115.43	STK/NL	474/12
1089	2991719.24	685595.07	130.18	REBAR	474/12
1090	3023889.45	612219.45	291.79	REBAR	469/58
1091	3023922.70	612205.25	292.66	REBAR	469/58
~~1092~~	~~3023965.11~~	~~612172.52~~	~~270.02~~	~~REBAR~~	
1093	2967775.41	711839.36	124.43	STK/NL	472/73
1094	2969169.24	710000.58	139.85	STK/NL	472/73-472/74
1095	2971782.51	704583.85	182.04	REBAR	472/10
1096	2971429.04	704725.26	177.86	STK/NL	472/10
1097	2970649.50	705453.32	172.79	PK	472/11
1098	2970514.62	705857.26	165.52	REBAR	472/12
1099	2970352.26	706228.85	162.48	STK/NL	472/12
1100	3022373.93	604203.50	351.81	REBAR	472/22
1101	3022006.28	603520.65	357.12	REBAR	472/23
1102	2962011.63	768454.21	9.12	DH ON DMH	472/36
1103	2962104.68	768190.35	9.32	X-CUT ON SMH	472/36
1104	2962111.99	767828.09	10.24	DH ON DMH	472/36
1105	2962171.14	767469.57	12.67	REBAR	472/37
1106	2962277.62	767107.71	13.85	REBAR	472/37
1107	2962202.36	767522.19	13.97	PK	472/37
1108	2962140.52	768120.44	9.57	REBAR	472/36
2000	2993010.74	666432.51	205.01	STK/NL-GPS	474/28
2001	2992851.39	666366.14	205.64	PK-GPS	474/28
~~2002~~	~~2994719.02~~	~~664668.12~~	~~207.86~~	~~PK-GPS~~	
2003	2994795.04	664478.94	206.33	PK-GPS	474/43
2004	3000852.01	662293.86	212.39	STK/NL-GPS	474/43
2005	3001023.80	662363.19	209.96	PK-GPS	474/46
2006	2998153.87	663546.00	220.94	REBAR	474/44
2007	2997667.11	663688.04	217.07	REBAR	474/44
2008	2997165.82	663846.71	213.97	REBAR	474/44
2009	2996666.16	664011.53	210.56	REBAR	474/44
2010	2996162.71	664172.63	208.14	REBAR	474/44
2011	2995657.93	664333.28	207.23	REBAR	474/43
2012	2995179.89	664488.17	206.88	REBAR	474/43
2013	2994792.59	664567.64	206.43	REBAR-GPS	474/43
2014	2994461.93	664747.75	205.00	REBAR-GPS	474/30
2015	2994076.18	664978.18	203.73	REBAR	474/30
2016	2993731.93	665263.95	204.18	REBAR	474/30

POINT	NORTHING	EASTING	ELEV	DESCRIPTION	FBK/PG
2017	2993501.57	665520.11	204.79	REBAR	474/29
2018	2993338.47	665666.50	204.85	REBAR	474/29
2019	2993184.00	666008.31	204.70	REBAR	474/29
2020	2993082.48	666238.40	204.51	REBAR	474/29
2021	2992921.74	666792.44	203.62	REBAR-GPS	459A/03
2022	2992842.84	667239.55	204.81	PK	459A/03
2023	2992757.60	667640.67	201.72	REBAR	459A/03
2024	2992668.58	668254.99	199.85	PK	459A/02
2025	2992706.42	668679.02	198.13	DH ON IRON ROD ON GRAN. PC	459A/02
2026	2992643.76	669004.00	194.84	BP/TACK	459A/02
2027	2992683.41	669351.30	193.91	PK IN CONC. PAD	474/26
2028	2992650.75	669743.95	192.11	BP/TACK	459A/01
2029	2992597.89	670103.47	187.18	BP/TACK	459A/01
2030	2992518.53	670519.48	185.69	DH ON MP24.74	459A/01
2031	2992459.03	670762.13	183.07	DH ON LEDGE	459A/01
2032	2992345.64	671049.41	183.29	REBAR	474/27
2033	2992198.62	671336.26	182.04	REBAR	474/27
2034	2991963.51	671649.00	177.91	REBAR-GPS	474/27
2035	2991764.12	671993.89	172.63	REBAR-GPS	474/27
2036	3000095.75	662765.19	214.53	REBAR-GPS	474/45
2037	3000471.14	662539.17	212.75	REBAR-GPS	474/45
2038	3001701.05	661742.19	211.01	REBAR-GPS	474/25
2039	3002312.13	661348.07	212.31	REBAR-GPS	474/25
2040	3003910.51	660455.20	215.16	REBAR-GPS	474/47
2041	3004465.02	660219.29	215.30	REBAR-GPS	474/47
~~2042~~	~~3005681.15~~	~~659703.86~~	~~221.19~~	~~REBAR~~	
~~2043~~	~~3007521.33~~	~~658823.33~~	~~232.17~~	~~REBAR~~	
~~2044~~	~~3008040.08~~	~~658528.62~~	~~234.91~~	~~REBAR-GPS~~	
~~2045~~	~~3009429.67~~	~~657736.46~~	~~242.77~~	~~REBAR-GPS~~	
~~2046~~	~~3009974.22~~	~~657426.83~~	~~246.18~~	~~REBAR-GPS~~	
2047	3011587.39	656510.87	249.24	REBAR-GPS-HELD	474/49
2048	3011968.30	656353.53	248.59	REBAR-GPS	474/49
~~2049~~	~~3012773.99~~	~~656063.15~~	~~247.25~~	~~REBAR~~	
~~2050~~	~~3015426.08~~	~~655097.50~~	~~236.11~~	~~REBAR~~	
~~2051~~	~~3017039.83~~	~~654513.58~~	~~227.41~~	~~REBAR-GPS~~	
~~2052~~	~~3017545.49~~	~~654328.56~~	~~226.47~~	~~REBAR-GPS~~	
~~2053~~	~~3018349.04~~	~~654043.10~~	~~226.91~~	~~REBAR~~	
~~2054~~	~~3022403.40~~	~~651717.15~~	~~223.57~~	~~REBAR-GPS~~	
~~2055~~	~~3023001.10~~	~~651168.85~~	~~224.08~~	~~REBAR-GPS~~	
~~2056~~	~~3025743.19~~	~~648653.90~~	~~225.41~~	~~REBAR-GPS~~	
~~2057~~	~~3026693.53~~	~~647782.53~~	~~225.64~~	~~REBAR~~	
~~2058~~	~~3027932.22~~	~~646577.29~~	~~226.55~~	~~STK/NL~~	
~~2059~~	~~3028175.67~~	~~643078.65~~	~~234.04~~	~~STK/NL-GPS~~	

COMMONWEALTH OF MASSACHUSETTS
ERIC C. DIVIRGILIO
CIVIL
No. 46256
REGISTERED PROFESSIONAL ENGINEER
5-17-2012

MASSACHUSETTS BAY TRANSPORTATION AUTHORITY

FITCHBURG COMMUTER RAIL LINE
IMPROVEMENT PROJECT
CONTRACT NO. G67CN01

SURVEY CONTROL POINTS
MASTER SHEET 3

ISSUE	DATE	DESCRIPTION	BY	CHKD.	APP.

HNTB
300 APOLLO DRIVE
CHELMSFORD, MA 01824
(978) 905-4000

PROJECT MANAGER 5/30/12 Date

MASSACHUSETTS BAY TRANSPORTATION AUTHORITY
APPROVED BY:
PROJECT MANAGER 6/30/12 Date

HORIZ: AS SHOWN	DES. BY	DR. BY	CHK. BY	PLAN NO. 168491
VERT: AS SHOWN	KP	KP	ECD	
DATE: 5/17/12				SHEET SC-3

ISSUE

PLOT DATE: 15-MAY-2012
FILE NAME: \\lexw00\pmwork\JOBS\43919 Fitchburg commuter rail\TECHPROD\Cadd\Track\Sheets\South Acton Contractor\Survey Control_Master3.dgn
XREF FILES:

POINT	NORTHING	EASTING	ELEV	DESCRIPTION	FBK/PG
2153	2987292.52	696507.77	165.72	EPLP	474/9
2155	3032266.79	583964.77	372.64	STK/NL	472/45
2156	3032474.12	583658.32	372.81	REBAR	472/46
2157	3032735.28	583077.64	377.35	STK/NL	472/44
2158	3032812.78	582508.33	378.58	STK/NL	472/45
2159	3003489.56	660632.81	214.28	RR SPK	474/47
2160	3017231.49	599891.75	397.29	STK/NL	474/55
2161	2991863.10	692361.23	114.10	X-MARK	474/10
~~2162~~	~~2991863.09~~	~~692361.22~~	~~114.10~~	~~X-CUT~~	
~~2163~~	~~2991952.58~~	~~692260.02~~	~~124.57~~	~~PK~~	
~~2164~~	~~3001807.81~~	~~661666.05~~	~~211.31~~	~~STK/NL~~	
~~2165~~	~~3002913.94~~	~~660917.72~~	~~0.00~~	~~REBAR~~	
2166	2996073.47	664200.01	208.09	RR SPK	474/44
2167	2990799.09	681873.51	149.19	STK/NL	470/36
2168	2990840.63	681279.99	154.54	REBAR	470/36
2169	2990961.82	680477.59	160.58	PM IN VERT.RAIL	474/13
~~2170~~	~~3032503.51~~	~~583636.73~~	~~357.57~~	~~REBAR~~	
2171	3032400.26	583646.86	371.08	REBAR	472/47
2172	2991895.61	692190.74	134.99	STK/NL	474/10
~~2173~~	~~3032341.73~~	~~583537.03~~	~~360.83~~	~~REBAR~~	
~~2174~~	~~3032340.81~~	~~583539.56~~	~~360.89~~	~~REBAR~~	
2175	3032544.12	583530.15	373.58	REBAR	472/46
~~2176~~	~~2990817.46~~	~~682131.65~~	~~148.21~~	~~PK~~	
~~2177~~	~~3027712.40~~	~~636130.91~~	~~233.61~~	~~REBAR~~	
~~2178~~	~~3027901.86~~	~~635597.65~~	~~233.60~~	~~REBAR~~	
~~2179~~	~~3027752.81~~	~~636175.04~~	~~236.75~~	~~REBAR~~	
~~2180~~	~~3027902.05~~	~~635737.36~~	~~235.03~~	~~REBAR~~	
~~2181~~	~~3028260.80~~	~~634582.08~~	~~234.34~~	~~REBAR~~	
~~2182~~	~~3028459.60~~	~~634013.31~~	~~234.21~~	~~REBAR~~	
~~2183~~	~~3028639.34~~	~~633510.77~~	~~235.72~~	~~REBAR~~	
~~2184~~	~~3028780.93~~	~~632645.60~~	~~234.54~~	~~REBAR~~	
~~2185~~	~~3028267.80~~	~~635221.43~~	~~235.33~~	~~REBAR~~	
~~2186~~	~~2992767.84~~	~~668077.88~~	~~201.42~~	~~PK~~	
~~2187~~	~~2992922.28~~	~~668386.15~~	~~217.31~~	~~X-CUT~~	
~~2188~~	~~2992571.91~~	~~668218.44~~	~~206.37~~	~~REBAR~~	
~~2189~~	~~2993142.92~~	~~667815.11~~	~~207.03~~	~~PK~~	
3000	2961285.61	727403.96	42.51	X-CUT	459/11
3001	2961454.05	727390.58	46.09	PK-GPS	459/11
3002	2961651.76	727372.07	49.39	X-CUT	459/11
3003	2998557.81	663366.74	223.64	PK-GPS	459/16
3004	2998494.44	663539.21	224.64	PUNCH/GGR	459/16
3005	2998861.11	663313.19	223.69	PK-GPS	459/16
3006	3021132.93	652871.91	229.40	PK-GPS-HELD	459/18

POINT	NORTHING	EASTING	ELEV	DESCRIPTION	FBK/PG
3007	3021065.46	652746.73	231.18	PK-GPS	459/18
3008	3008674.75	658121.20	240.50	PK-GPS-HELD	459/19
3009	3008725.25	657996.25	246.30	PK-GPS	459/19
3010	3005009.43	659997.02	218.94	PK-GPS-HELD	459/20
3011	3004968.41	659928.72	217.10	PK-GPS	459/20
3012	3005334.12	659850.39	218.59	STK/NL-GPS	474/47
3013	3004606.01	660158.22	215.72	REBAR	474/47
3014	3014258.71	655512.32	244.06	PK-GPS	459/23
3015	2961610.26	727921.82	47.39	PK-GPS-HELD	459/26
3016	2961456.10	728089.34	46.46	PK	459/26
3017	3028397.41	645432.41	232.95	REBAR	459/41
3018	3028128.31	645500.36	228.78	PK	459/41
3019	3023477.18	614138.65	281.16	PK	459/42
3020	3023676.48	614296.11	285.91	PK	459/42
3021	2968267.40	711499.77	129.23	PK-GPS	459/52
3022	2968438.82	711552.28	122.13	PK	459/52
3023	2972740.47	704513.28	188.49	PK-GPS-HELD	459/53 *
3024	2972541.14	704563.97	186.57	REBAR-GPS	459/53 *
3026	2963332.12	764823.65	6.78	STK/NL-GPS	470/46
3027	2963695.74	764345.77	9.03	REBAR	470/46
3028	2963855.19	763885.47	8.08	REBAR-GPS	470/46
* MEASUREMENT NEEDED, ~~NO TIES NEEDED~~					

COMMONWEALTH OF MASSACHUSETTS
ERIC C. DIVIRGILIO
CIVIL
No. 46250
REGISTERED PROFESSIONAL ENGINEER
5-17-2012

MASSACHUSETTS BAY TRANSPORTATION AUTHORITY

FITCHBURG COMMUTER RAIL LINE
IMPROVEMENT PROJECT
CONTRACT NO. G67CN01

SURVEY CONTROL POINTS
MASTER SHEET 5

ISSUE	DATE	DESCRIPTION	BY	CHKD.	APP.

HNTB
300 APOLLO DRIVE
CHELMSFORD, MA 01824
(978) 905-4000

PROJECT MANAGER 5/20/12 Date

MASSACHUSETTS BAY TRANSPORTATION AUTHORITY
APPROVED BY:
PROJECT MANAGER 6/30/12 Date

HORIZ: AS SHOWN	DES. BY	DR. BY	CHK. BY	PLAN NO. 168492
VERT: AS SHOWN	KP	KP	ECD	
DATE: 5/17/12				SHEET SC-5

ISSUE

PLOT DATE: 15-MAY-2012
FILE NAME: \\lexw00\pmwork\JOBS\43919 Fitchburg commuter rail\TECHPROD\Cadd\Track\Sheets\South Acton Contractor\Survey Control_Master5.dgn
XREF FILES:

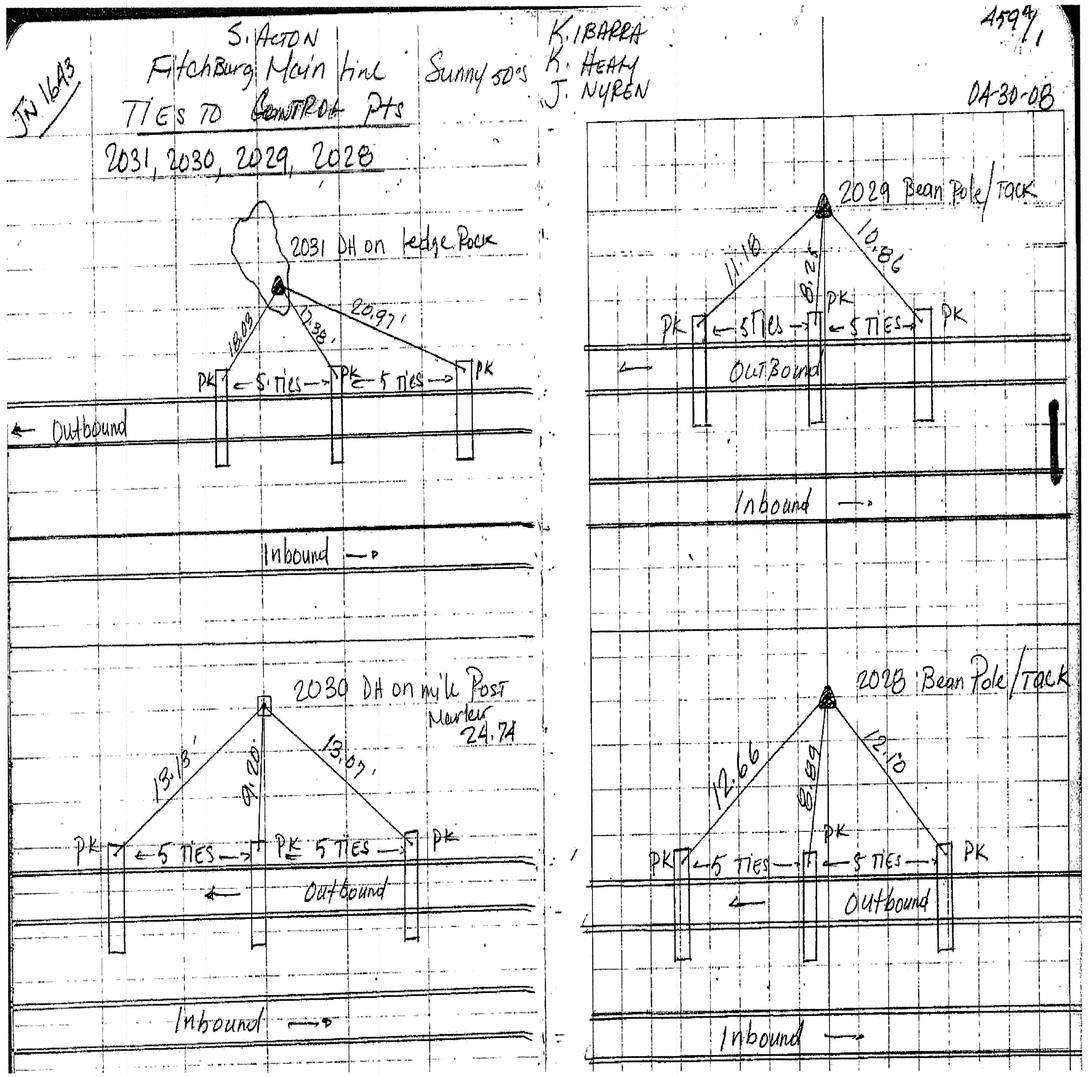

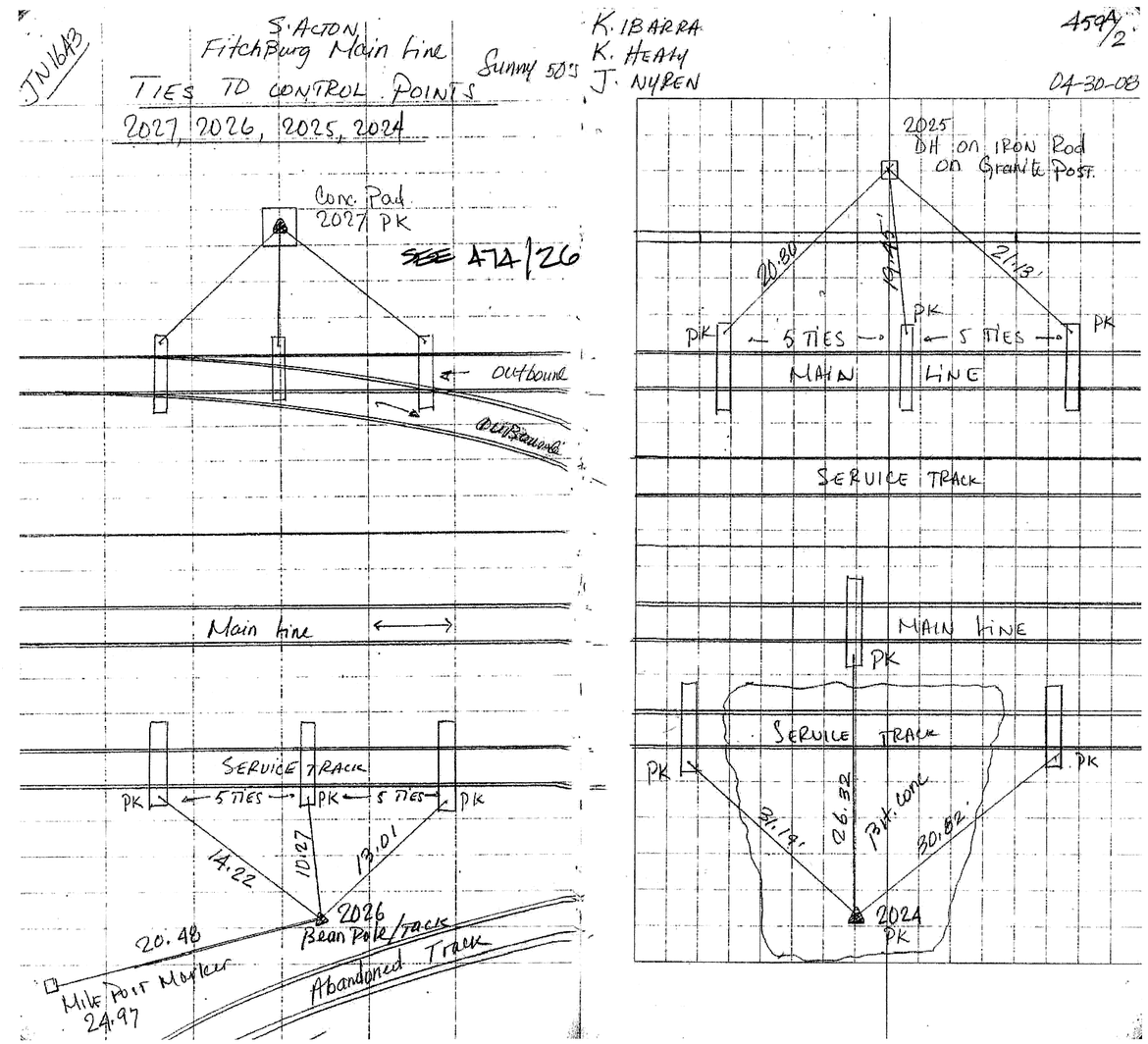

COMMONWEALTH OF MASSACHUSETTS
ERIC C. DIVIRGILIO
CIVIL
No. 46256
REGISTERED PROFESSIONAL ENGINEER
5-17-2012

MASSACHUSETTS BAY TRANSPORTATION AUTHORITY

FITCHBURG COMMUTER RAIL LINE
IMPROVEMENT PROJECT
CONTRACT NO. G67CN01

SURVEY CONTROL POINTS AND TIE DOWN SKETCH SHEET 1

ISSUE	DATE	DESCRIPTION	BY	CHKD.	APP.

HNTB
300 APOLLO DRIVE
CHELMSFORD, MA 01824
(978) 905-4000

PROJECT MANAGER 5/30/12 Date

MASSACHUSETTS BAY TRANSPORTATION AUTHORITY
APPROVED BY:
PROJECT MANAGER 6/30/12 Date

HORIZ: AS SHOWN	DES. BY	DR. BY	CHK. BY	PLAN NO. 168493	ISSUE
VERT: AS SHOWN	KP	KP	ECD		
DATE: 5/17/12				SHEET SC-101	

PLOT DATE: 15-MAY-2012
FILE NAME: \\iexw00\pmwork\JOBS\43919 Fitchburg commuter rail\TECHPROD\Cadd\Track\Sheets\South Acton Contractor\TR-Survey Control_1.dgn
XREF FILES:

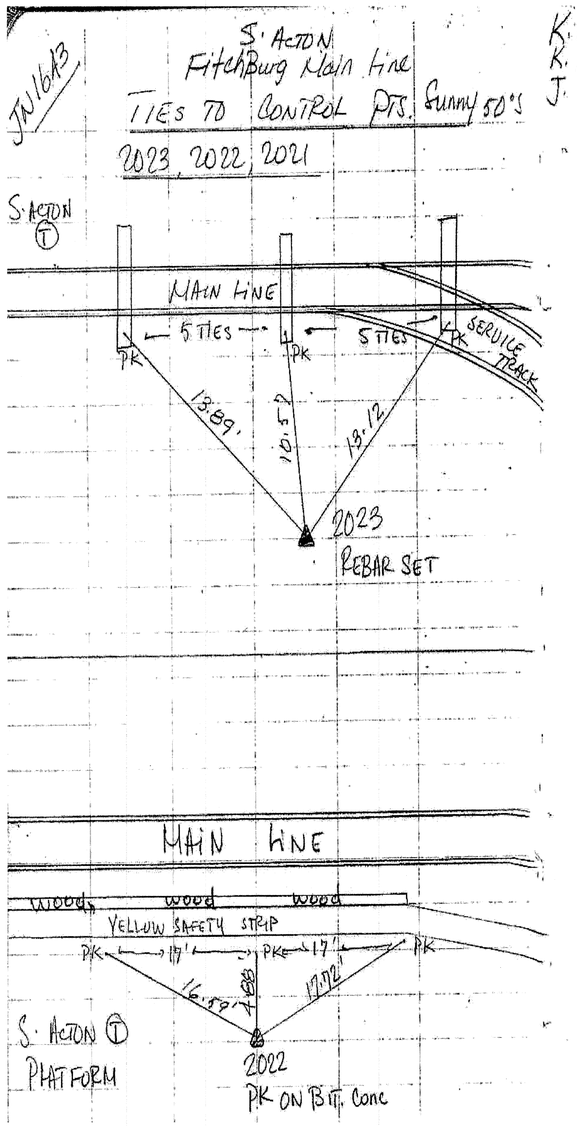

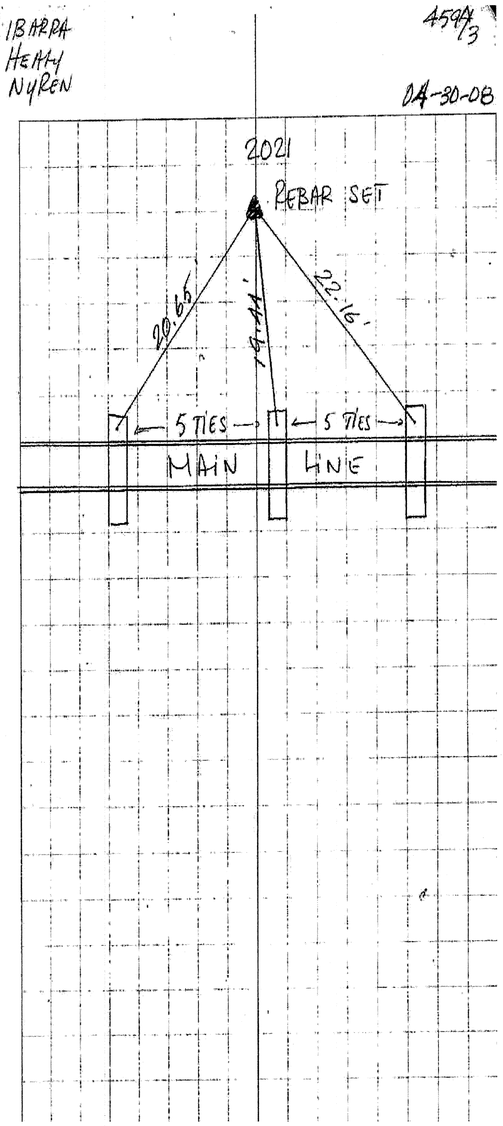

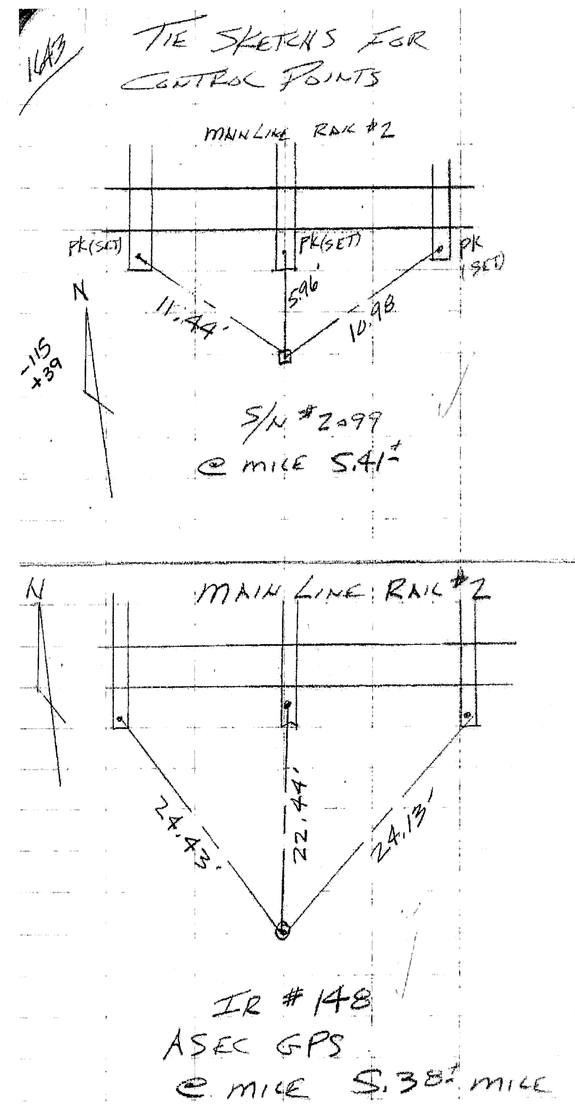

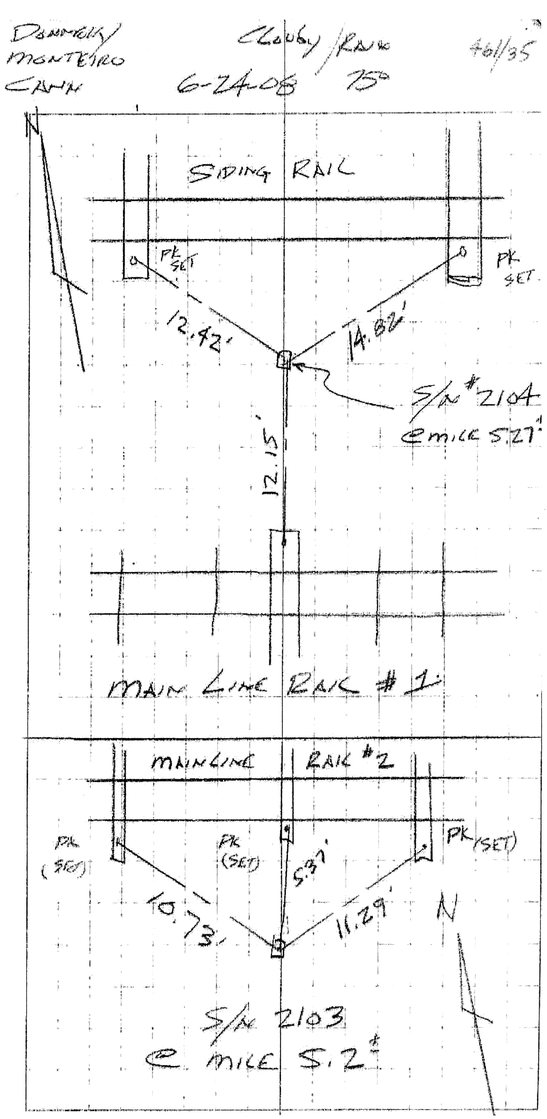

COMMONWEALTH OF MASSACHUSETTS
ERIC C. DIVIRGILIO
CIVIL
No. 46256
REGISTERED PROFESSIONAL ENGINEER
5-17-2012

MASSACHUSETTS BAY TRANSPORTATION AUTHORITY

FITCHBURG COMMUTER RAIL LINE
IMPROVEMENT PROJECT
CONTRACT NO. G67CN01

SURVEY CONTROL POINTS AND TIE DOWN SKETCH SHEET 2

ISSUE	DATE	DESCRIPTION	BY	CHKD.	APP.

HNTB
300 APOLLO DRIVE
CHELMSFORD, MA 01824
(978) 905-4000

PROJECT MANAGER 5/30/12 Date

MASSACHUSETTS BAY TRANSPORTATION AUTHORITY
APPROVED BY:
PROJECT MANAGER 6/30/12 Date

HORIZ: AS SHOWN	DES. BY	DR. BY	CHK. BY	PLAN NO. 168494	ISSUE
VERT: AS SHOWN	KP	KP	ECD		
DATE: 5/17/12				SHEET SC-102	

PLOT DATE: 15-MAY-2012
FILE NAME: \\lexw00\pmwork\JOBS\43919 Fitchburg commuter rail\TECHPROD\Cadd\Track\Sheets\South Acton Contractor\TR-Survey Control_2.dgn
XREF FILES:

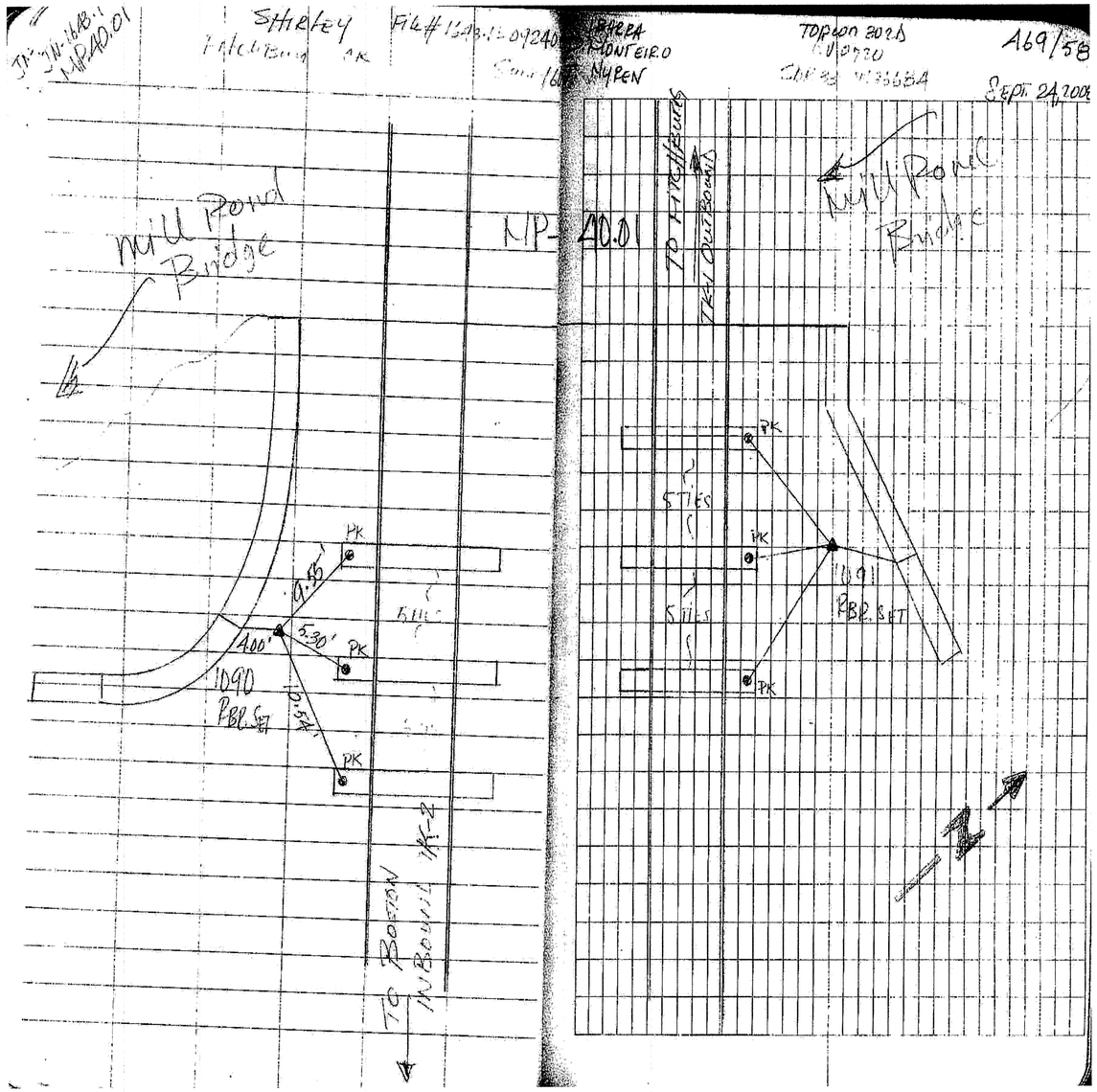

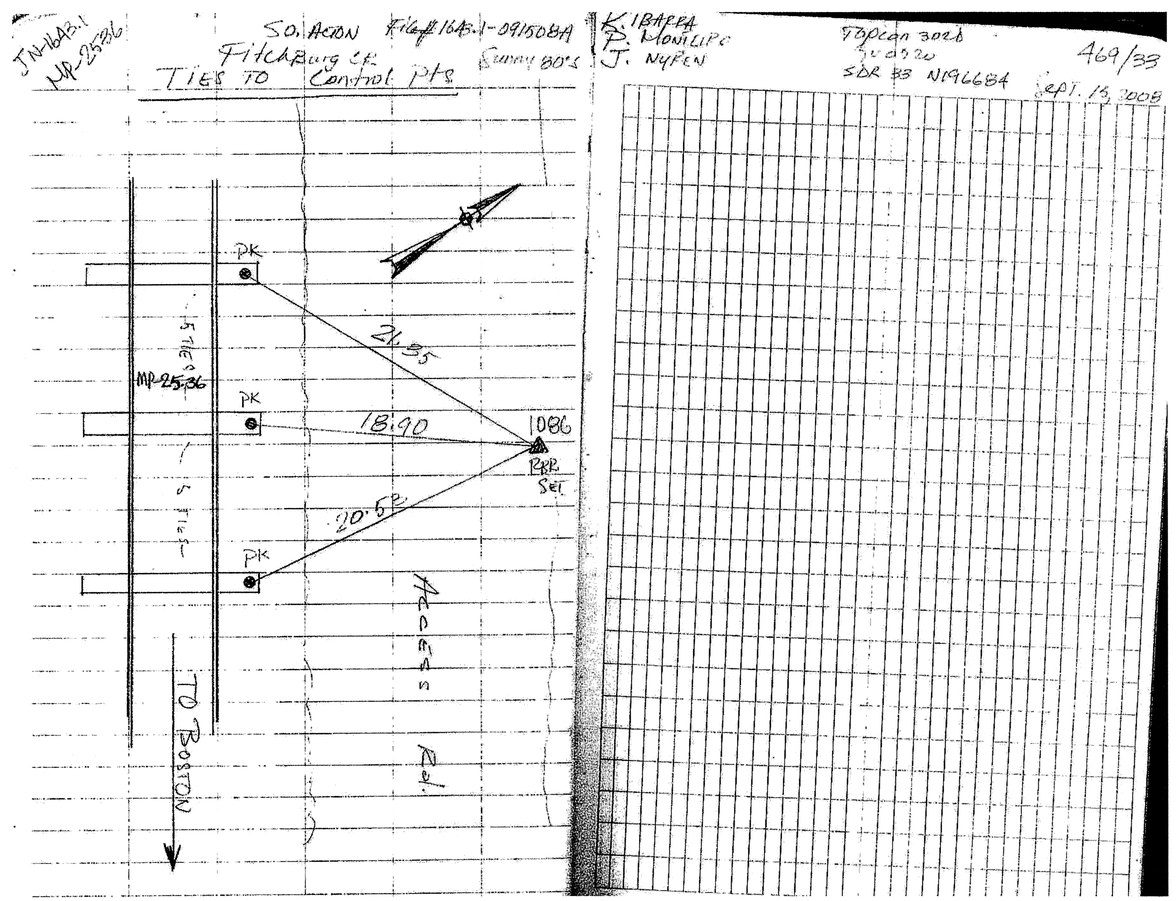

COMMONWEALTH OF MASSACHUSETTS
ERIC C. DIVIRGILIO
CIVIL
No. 46256
REGISTERED PROFESSIONAL ENGINEER
5-17-2012

MASSACHUSETTS BAY TRANSPORTATION AUTHORITY

FITCHBURG COMMUTER RAIL LINE
IMPROVEMENT PROJECT
CONTRACT NO. G67CN01

SURVEY CONTROL POINTS AND TIE DOWN SKETCH SHEET 11

ISSUE	DATE	DESCRIPTION	BY	CHKD.	APP.

HNTB
300 APOLLO DRIVE
CHELMSFORD, MA 01824
(978) 905-4000

PROJECT MANAGER 5/30/12 Date

MASSACHUSETTS BAY TRANSPORTATION AUTHORITY
APPROVED BY: 6/30/12
PROJECT MANAGER Date

HORIZ: AS SHOWN	DES. BY	DR. BY	CHK. BY	PLAN NO. 168495	ISSUE
VERT: AS SHOWN	KP	KP	ECD		
DATE: 5/17/12				SHEET SC-111	

PLOT DATE: 16-MAY-2012
FILE NAME: \\lexw00\Pmwork\JOBS\43919 Fitchburg commuter rail\TECHPROD\Cadd\Track\Sheets\South Acton Contractor\TR-Survey Control_11.dgn
XREF FILES:

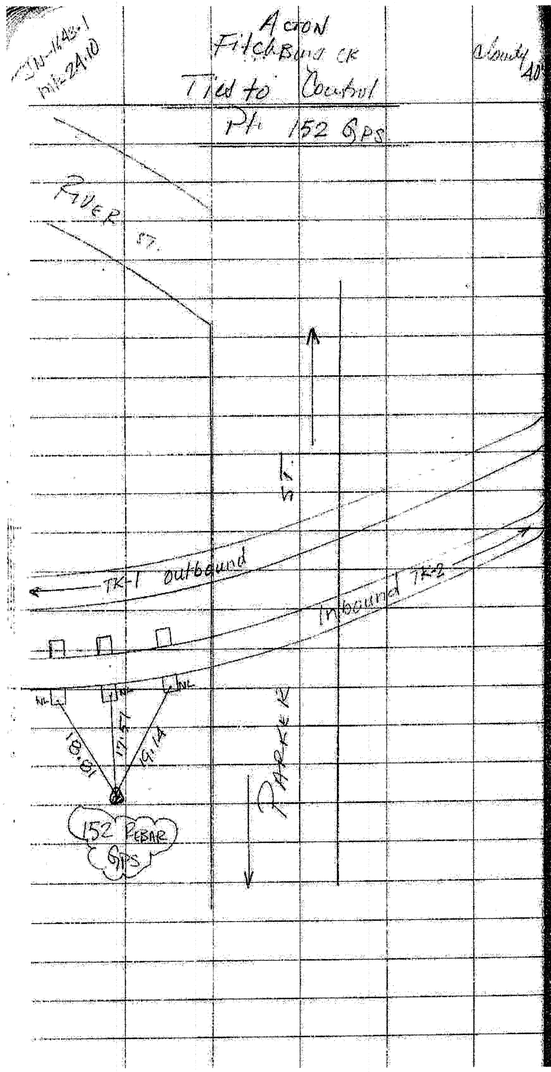

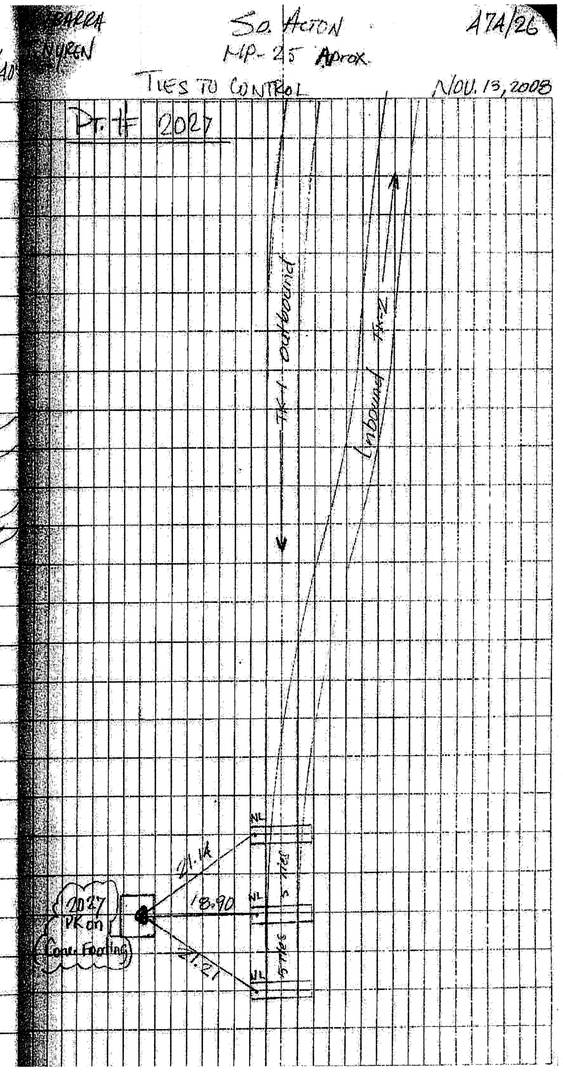

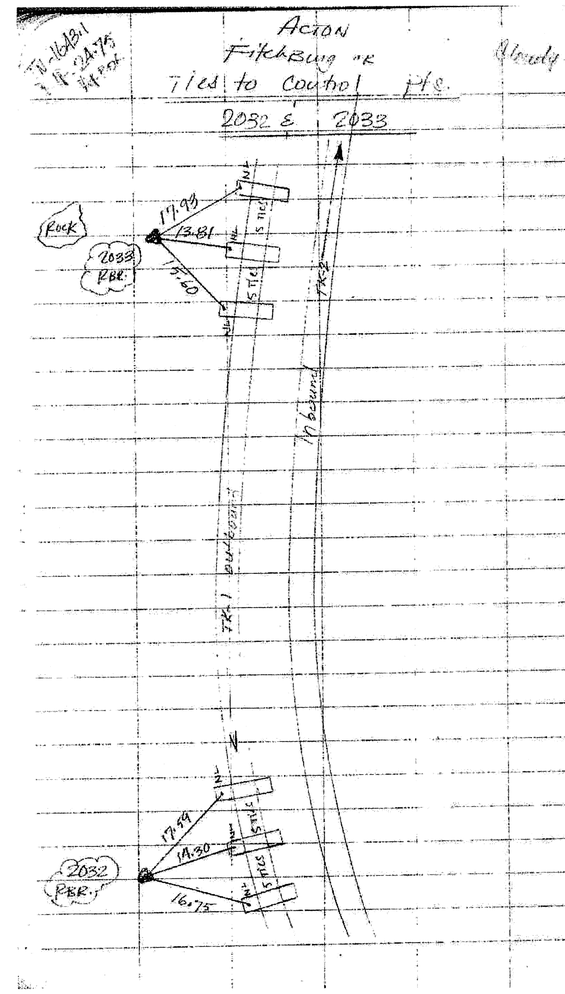

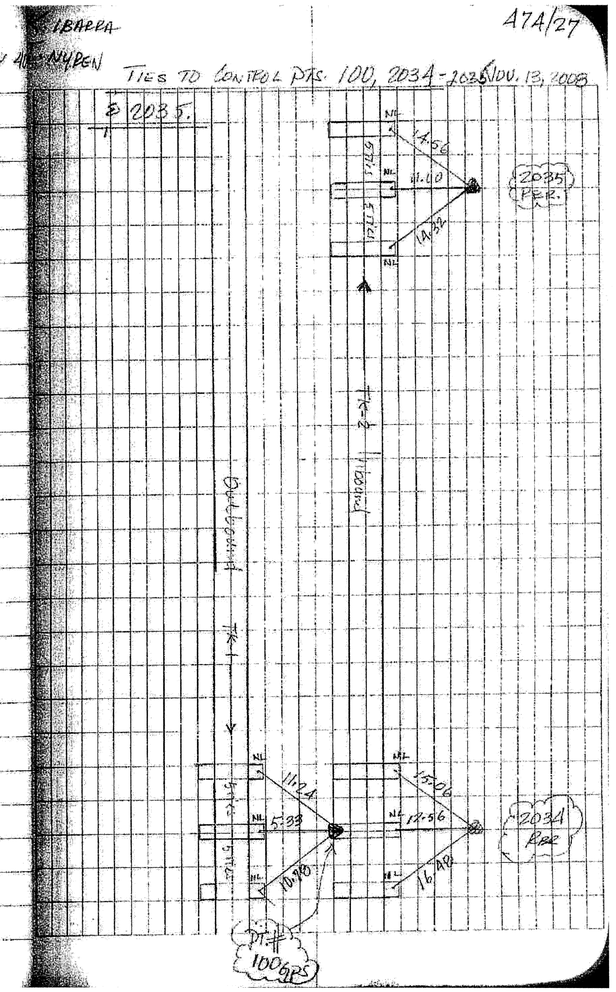

MASSACHUSETTS BAY TRANSPORTATION AUTHORITY

FITCHBURG COMMUTER RAIL LINE
IMPROVEMENT PROJECT
CONTRACT NO. G67CN01

SURVEY CONTROL POINTS AND TIE DOWN SKETCH SHEET 36

COMMONWEALTH OF MASSACHUSETTS
ERIC C. DIVIRGILIO
CIVIL
No. 46256
REGISTERED PROFESSIONAL ENGINEER
5-17-2012

ISSUE	DATE	DESCRIPTION	BY	CHKD.	APP.

HNTB
300 APOLLO DRIVE
CHELMSFORD, MA 01824
(978) 905-4000

PROJECT MANAGER — Date 5/30/12

MASSACHUSETTS BAY TRANSPORTATION AUTHORITY
APPROVED BY: PROJECT MANAGER — Date 6/30/12

HORIZ: AS SHOWN	DES. BY	DR. BY	CHK. BY	PLAN NO. 168496	ISSUE
VERT: AS SHOWN	KP	KP	ECD		
DATE: 5/17/12				SHEET SC-136	

PLOT DATE: 15-MAY-2012
FILE NAME: \\lexw00\pmwork\JOBS\43919 Fitchburg commuter rail\TECHPROD\Cadd\Track\Sheets\South Acton Contractor\TR-Survey Control_36.dgn
XREF FILES:

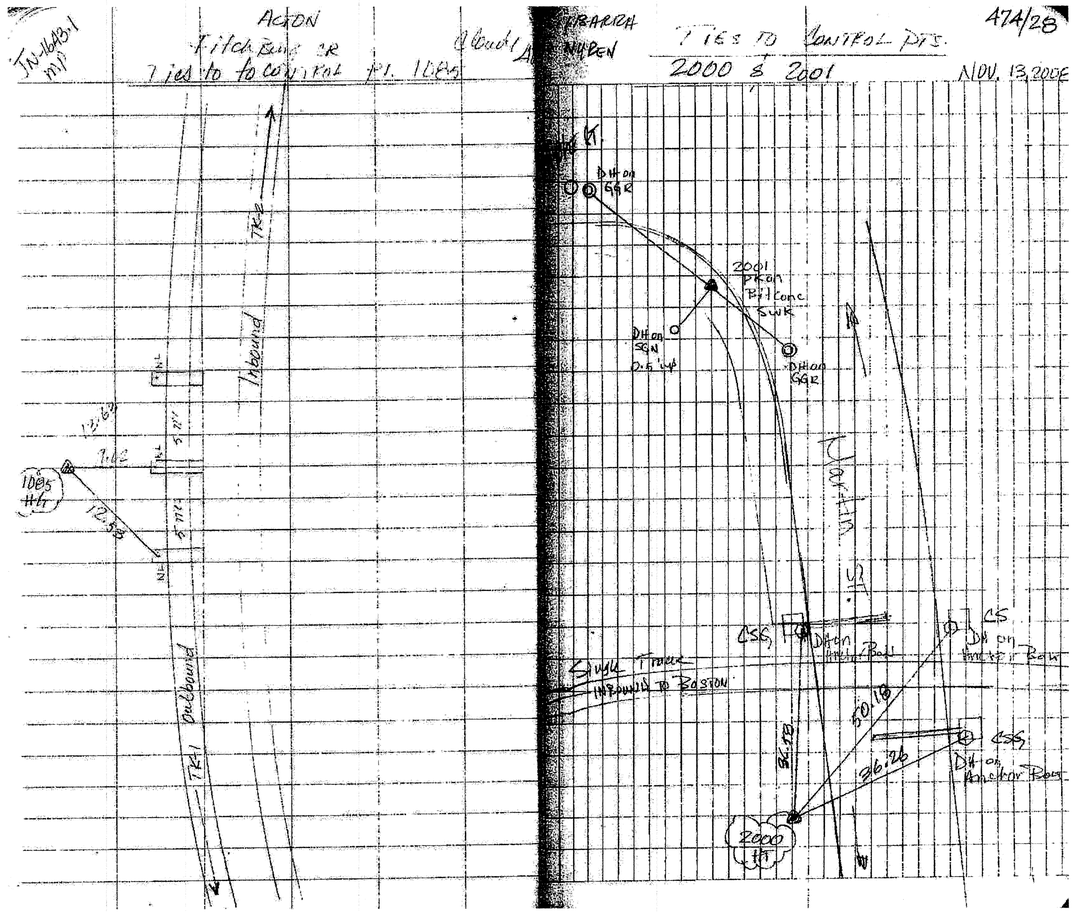

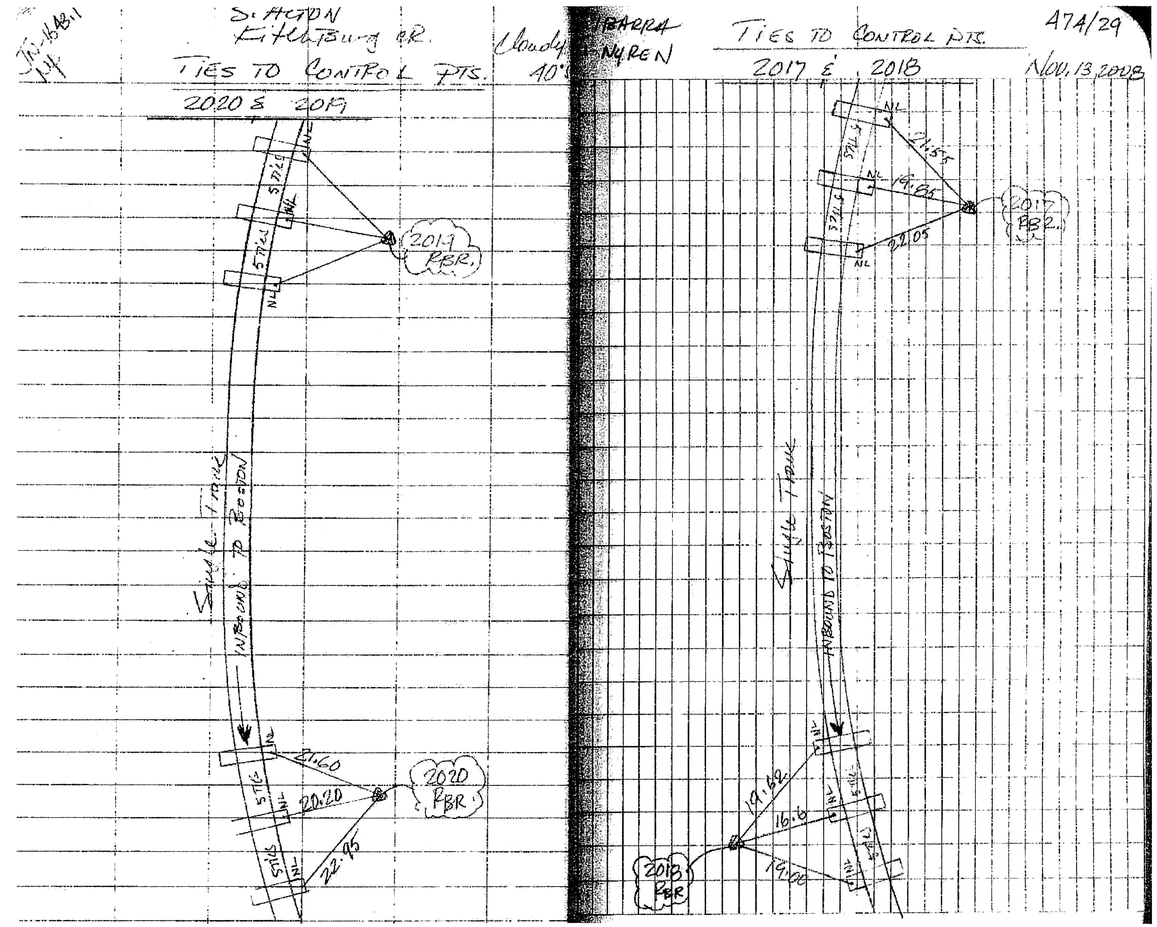

MASSACHUSETTS BAY TRANSPORTATION AUTHORITY

FITCHBURG COMMUTER RAIL LINE
IMPROVEMENT PROJECT
CONTRACT NO. G67CN01

SURVEY CONTROL POINTS AND TIE DOWN SKETCH SHEET 37

COMMONWEALTH OF MASSACHUSETTS
ERIC C. DIVIRGILIO
CIVIL
No. 46256
REGISTERED PROFESSIONAL ENGINEER
5-17-2012

ISSUE	DATE	DESCRIPTION	BY	CHKD.	APP.

HNTB
300 APOLLO DRIVE
CHELMSFORD, MA 01824
(978) 905-4000

PROJECT MANAGER — Date 5/30/12

MASSACHUSETTS BAY TRANSPORTATION AUTHORITY
APPROVED BY: PROJECT MANAGER — Date 6/30/12

HORIZ: AS SHOWN	DES. BY	DR. BY	CHK. BY	PLAN NO. 168497	ISSUE
VERT: AS SHOWN	KP	KP	ECD		
DATE: 5/17/12				SHEET SC-137	

PLOT DATE: 15-MAY-2012
FILE NAME: \\exw00\pmwork\JOBS\43919 Fitchburg commuter rail\TECHPROD\Cadd\Track\Sheets\South Acton Contractor\TR-Survey Control_37.dgn
XREF FILES:

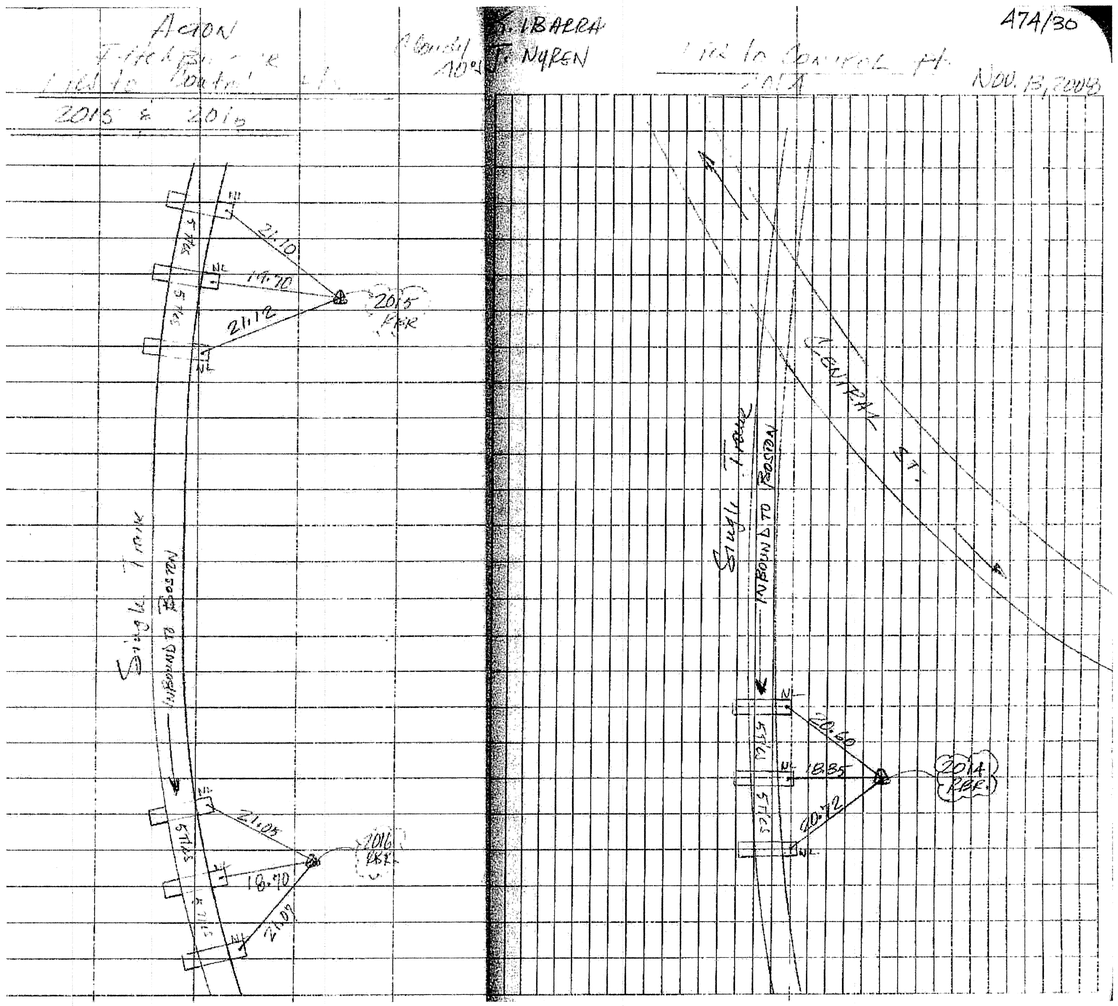

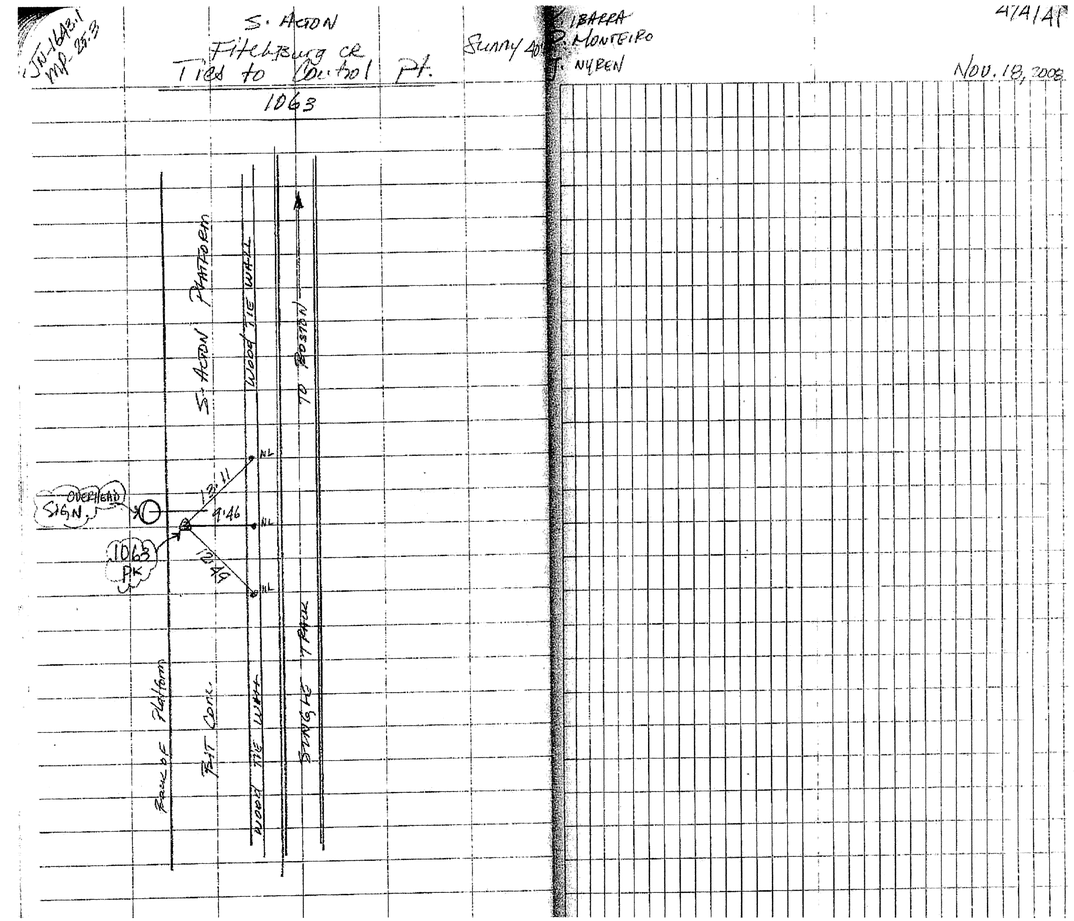

COMMONWEALTH OF MASSACHUSETTS
ERIC C. DIVIRGILIO
CIVIL
No. 46256
REGISTERED PROFESSIONAL ENGINEER
5-17-2012

MASSACHUSETTS BAY TRANSPORTATION AUTHORITY

FITCHBURG COMMUTER RAIL LINE
IMPROVEMENT PROJECT
CONTRACT NO. G67CN01

SURVEY CONTROL POINTS AND TIE DOWN SKETCH SHEET 38

ISSUE	DATE	DESCRIPTION	BY	CHKD.	APP.

HNTB
300 APOLLO DRIVE
CHELMSFORD, MA 01824
(978) 905-4000

PROJECT MANAGER — Date 5/30/12

MASSACHUSETTS BAY TRANSPORTATION AUTHORITY
APPROVED BY: PROJECT MANAGER — Date 6/30/12

HORIZ: AS SHOWN	DES. BY	DR. BY	CHK. BY	PLAN NO. 168498	ISSUE
VERT: AS SHOWN	KP	KP	ECD		
DATE: 5/17/12				SHEET SC-138	

PLOT DATE: 15-MAY-2012
FILE NAME: \\exwOO\pnwork\JOBS\43919 Fitchburg commuter rail\TECHPROD\Cadd\Track\Sheets\South Acton Contractor\TR-Survey Control_38.dgn
XREF FILES:

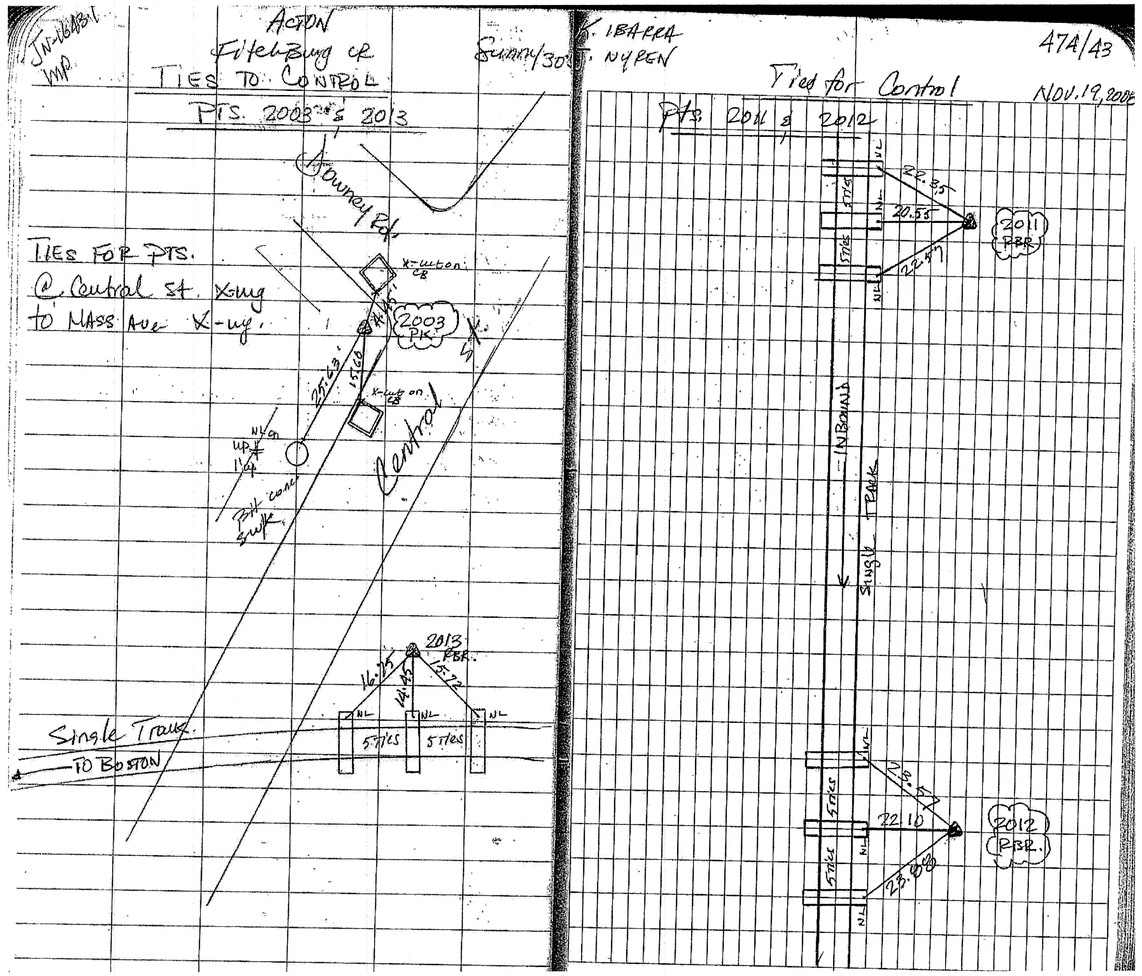

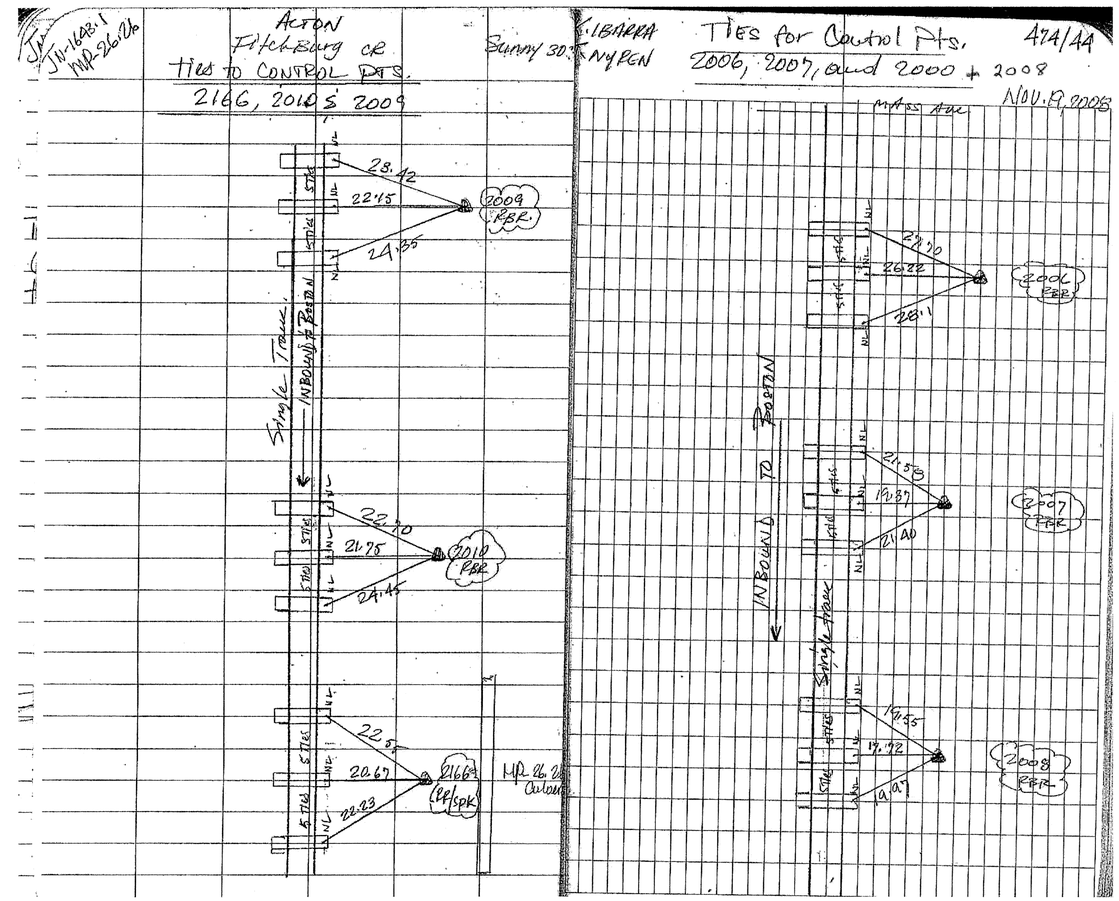

COMMONWEALTH OF MASSACHUSETTS
ERIC C. DIMIRGILIO
CIVIL
No. 46256
REGISTERED PROFESSIONAL ENGINEER
5-17-2012

MASSACHUSETTS BAY TRANSPORTATION AUTHORITY

FITCHBURG COMMUTER RAIL LINE
IMPROVEMENT PROJECT
CONTRACT NO. G67CN01

SURVEY CONTROL POINTS AND TIE DOWN SKETCH SHEET 39

ISSUE	DATE	DESCRIPTION	BY	CHKD.	APP.

HNTB
300 APOLLO DRIVE
CHELMSFORD, MA 01824
(978) 905-4000

PROJECT MANAGER — Date 5/30/12

MASSACHUSETTS BAY TRANSPORTATION AUTHORITY
APPROVED BY: PROJECT MANAGER — Date 6/30/12

		DES. BY	DR. BY	CHK. BY		
HORIZ:	AS SHOWN	KP	KP	ECD	PLAN NO. 168499	ISSUE
VERT:	AS SHOWN					
DATE:	5/17/12				SHEET SC-139	

PLOT DATE: 15-MAY-2012
FILE NAME: \\lexwn00\pmwork\JOBS\43919 Fitchburg commuter rail\TECHPROD\Cadd\Track\Sheets\South Acton Contractor\TR-Survey Control_39.dgn
XREF FILES:

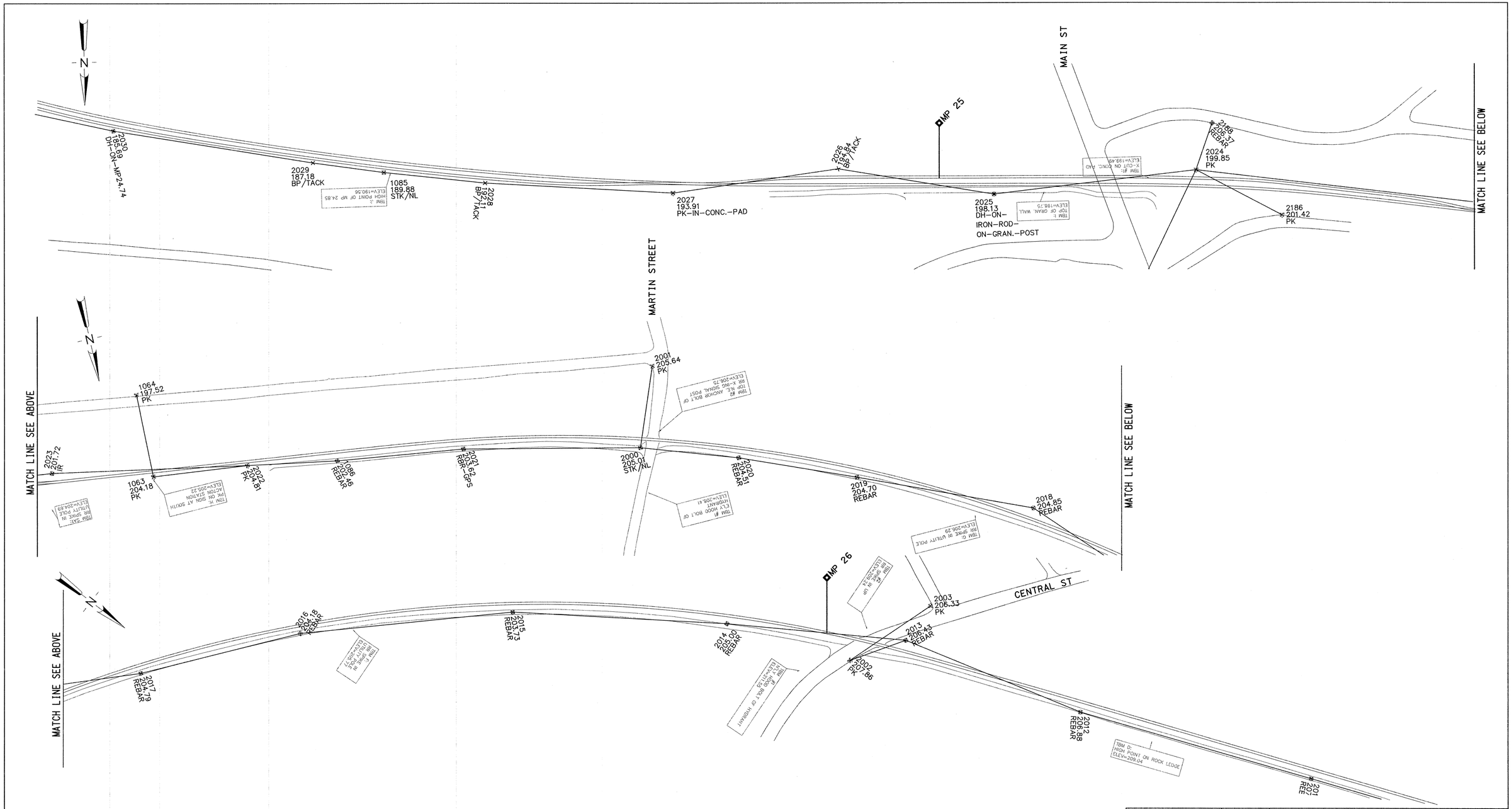

COMMONWEALTH OF MASSACHUSETTS
ERIC C. DIVIRGILIO
CIVIL
No. 46256
REGISTERED PROFESSIONAL ENGINEER
5-17-2012

MASSACHUSETTS BAY TRANSPORTATION AUTHORITY

FITCHBURG COMMUTER RAIL LINE
IMPROVEMENT PROJECT
CONTRACT NO. G67CN01

SURVEY CONTROL POINTS AND BASELINE MP 25 TO MP 26

ISSUE	DATE	DESCRIPTION	BY	CHKD.	APP.

HNTB
300 APOLLO DRIVE
CHELMSFORD, MA 01824
(978) 905-4000

PROJECT MANAGER 5/30/12 Date

MASSACHUSETTS BAY TRANSPORTATION AUTHORITY
APPROVED BY:
PROJECT MANAGER 6/30/12 Date

	DES. BY	DR. BY	CHK. BY
HORIZ: AS SHOWN	KP	KP	ECD
VERT: AS SHOWN			
DATE: 5/17/12			

PLAN NO. 168500
SHEET SC-216
ISSUE

PLOT DATE: 21-MAY-2012
FILE NAME: \\lexw00\pmwork\J03S\43919 Fitchburg commuter rail\TECHPROD\Cadd\Track\Sheets\South Acton Contractor\TR-SurveyBaselineControl_16.dgn
XREF FILES:

TRACK GEOMETRY DATA - TRACK 1

ELEMENT	CURVE No.	POINT	STATION	BEARING	COORDINATES Northing	COORDINATES Easting	DATA			
CURVE	C 24-1/1	POC	1313+08.53		2992612.2985	669935.9251	△s = 2°21'34.48"	Dc= 0°58'28.83"	R= 5878.5222'	Lc= 242.0888'
		PI					V= 45MPH	Et= 1.38"	Ea= 1.50"	Eu= -0.12"
		PCC	1315+50.62		2992643.0775	669695.8151	Tc= 121.0630'	Ec= 1.2465'	CC:N 2986798.1125	E 669068.5931
CURVE	C 24-1/1	PCC	1315+50.62		2992643.0775	669695.8151	△c = 4°10'38.14"	Dc= 1°06'29.71"	R= 5170.0000'	Lc= 376.9230'
		PI					V= 45MPH	Et= 1.57"	Ea= 1.50"	Eu= 0.07"
		CS	1319+27.54		2992669.6033	669319.9044	Tc= 188.5480'	Ec= 3.4370'	CC:N 2987502.5901	E 669144.1905
SPIRAL		CS	1319+27.54		2992669.6033	669319.9044	△s = 0°35'09.82"	Ls= 105.7646'	LT= 70.5101'	ST= 35.2552'
							X= 105.7635'	Y= 0.3606'	P= 0.0902'	Xo= 52.8821'
		ST	1320+33.31		2992672.4770	669214.1793				
EQN BK STA 1320+33.31										
EQN AHD STA 1320+33.29										
TANGENT				N 88°38'18.10" W						
		ST	1320+33.31		2992672.4770	669214.1793				
				N 88°38'18.10" W						
TANGENT	2			N 88°38'18.10" W			NO. 15 RH CROSSOVER			
		PI	1323+35.35		2992679.6549	668912.2017				
				N 88°38'18.10" W						
				N 88°38'18.10" W						
TANGENT		PS	1323+75.33		2992680.6049	668872.2339				
				N 88°38'18.10" W						
TANGENT	3			N 88°38'18.10" W			NO. 15 LH CROSSOVER			
		PS	1324+25.33		2992681.7930	668822.2480				
				N 88°38'18.10" W						
				N 88°38'18.10" W						
TANGENT		PI	1324+65.31		2992682.7431	668782.2803				
				N 88°38'18.10" W						
SPIRAL		TS	1327+71.38		2992690.0163	668476.2911	△s = 1°33'26.62"	Ls= 117.2637'	LT= 78.1788'	ST= 39.0907'
							X= 117.2551'	Y= 1.0624'	P= 0.2656'	Xo= 58.6304'
		SC	1328+88.65		2992693.8647	668359.0944				
CURVE	C 25-1/1	SC	1328+88.65		2992693.8647	668359.0944	△c = 2°40'41.70"	Dc= 2°39'23.27"	R= 2157.0367'	Lc= 100.8201'
		PI			2992694.5090	668287.2813	V= 45MPH	Et= 3.77"	Ea= 1.75"	Eu= 2.02"
		CS	1329+89.47		2992701.3507	668258.5527	Tc= 50.4238'	Ec= 0.5893'	CC:N 2994848.1026	E 668468.9409
SPIRAL		CS	1329+89.47		2992701.3507	668258.5527	△s = 2°29'46.02"	Ls= 187.9446'	LT= 125.3089'	ST= 62.6595'
							X= 187.9089'	Y= 2.7289'	P= 0.6823'	Xo= 93.9664'
		ST	1331+78.98		2992725.1041	668072.1312				
EQN BK STA 1331+77.41										
EQN AHD STA 1331+78.98										
TANGENT				N 81°54'23.75" W						
		ST	1331+78.98		2992725.1041	668072.1312				
				N 81°54'23.75" W						

TRACK GEOMETRY DATA - TRACK 1 CONTINUED

ELEMENT	CURVE No.	POINT	STATION	BEARING	COORDINATES Northing	COORDINATES Easting	DATA			
SPIRAL		TS	1341+08.21		2992855.9280	667152.1547	△ s = 5°16'00.09"	Ls= 523.5257'	LT= 349.1717'	ST= 174.6491'
							X= 523.0835'	Y= 16.0313'	P= 4.0090'	Xo= 261.6891'
		SC	1346+31.74		2992945.4432	666636.5382				
CURVE	C 25-2/1	SC	1346+31.74		2992945.4432	666636.5382	△c = 56°39'25.93"	Dc= 2°00'43.23"	R= 2847.6904'	Lc= 2815.9521'
		PI			2993143.7268	665128.3044	V= 60MPH	Et= 5.07"	Ea= 2.50"	Eu= 2.57"
		CS	1374+47.69		2994742.9070	664618.3074	Tc= 1535.1574'	Ec= 387.4369'	CC:N 2995716.0667	E 667294.5549
SPIRAL		CS	1374+47.69		2994742.9070	664618.3074	△ s = 2°11'56.99"	Ls= 218.6037'	LT= 145.7471'	ST= 72.8781'
							X= 218.5715'	Y= 2.7966'	P= 0.6992'	Xo= 109.2965'
		ST	1376+66.29		2994950.1804	664548.8879				
EQN BK STA 1376+66.41										
EQN AHD STA 1376+81.51										
TANGENT				N 17°47'00.75" W						
		ST	1376+66.29		2994950.1804	664548.8879				
				N 17°47'00.75" W						
TANGENT				N 17°47'00.75" W						
		POL	1377+98.90		2995062.2093	664512.9549				
				N 17°47'00.75" W						

TRACK GEOMETRY DATA - TEMPORARY SWINGLINE

ELEMENT	CURVE No.	POINT	STATION	BEARING	COORDINATES Northing	COORDINATES Easting	DATA			
TANGENT				N 88°10'38.39" W						
		POL	1328+00.00		2992690.4553	668447.6730				
				N 88°10'38.39" W						
SPIRAL		TS	1329+37.75		2992694.8365	668309.9960	△ s = 1°32'59.32"	Ls= 100.0000'	LT= 66.6692'	ST= 33.3357'
							X= 99.9927'	Y= 0.9016'	P= 0.2254'	Xo= 49.9988'
		SC	1330+37.75		2992698.9180	668210.0826				
CURVE	C 25-1/1a	SC	1330+37.75		2992698.9180	668210.0826	△ c = 3°10'16.00"	Dc= 3°06'00.00"	R= 1848.4764'	Lc= 102.2939'
		PI			2992699.6477	668158.8071	V= 35MPH	Et= 2.66"	Ea= 1.0"	Eu= 1.66"
		CS	1331+40.04		2992707.7588	668108.1720	Tc= 51.1662'	Ec= 0.7080'	CC:N 2994544.1932	E 668318.8227
SPIRAL		CS	1331+40.04		2992707.7588	668108.1720	△ s = 1°32'59.32"	Ls= 100.0000'	LT= 66.6692'	ST= 33.3357'
							X= 99.9927'	Y= 0.9016'	P= 0.2254'	Xo= 49.9988'
		ST	1332+40.04		2992720.9439	668009.0484				
TANGENT				N 81°54'23.75" W						
		ST	1332+40.04		2992720.9439	668009.0484				
				N 81°54'23.75" W						
		POL	1341+23.68		2992845.3493	667134.2085				

COMMONWEALTH OF MASSACHUSETTS
ERIC C. DIVIRGILIO
CIVIL
No. 46256
REGISTERED PROFESSIONAL ENGINEER
5-17-2012

MASSACHUSETTS BAY TRANSPORTATION AUTHORITY

FITCHBURG COMMUTER RAIL LINE
IMPROVEMENT PROJECT
CONTRACT NO. G67CN01

SOUTH ACTON STATION
TRACK 1
GEOMETRY DATA

ISSUE	DATE	DESCRIPTION	BY	CHKD.	APP.

HNTB
300 APOLLO DRIVE
CHELMSFORD, MA 01824
(978) 905-4000

PROJECT MANAGER 5/30/12 Date

MASSACHUSETTS BAY TRANSPORTATION AUTHORITY
APPROVED BY: 6/30/12
PROJECT MANAGER Date

HORIZ: AS SHOWN	DES. BY	DR. BY	CHK. BY	PLAN NO. 168501	ISSUE
VERT: AS SHOWN	SS	SS	ECD		
DATE: 5/17/12				SHEET T-74	

PLOT DATE: 16-MAY-2012
FILE NAME: \\lexw00\pnwork\JOBS\43919 Fitchburg commuter rail\TECHPROD\Cadd\Track\Sheets\South Acton Contractor\TR-SouthActon-Geo-001P30.dgn
XREF FILES:

TRACK GEOMETRY DATA - TRACK 2

ELEMENT	CURVE No.	POINT	STATION	BEARING	COORDINATES Northing	COORDINATES Easting	DATA			
CURVE	C 24-1/2	POC	1313+10.29		2992599.3862	669933.8652	△s = 1°51'31.16"	Dc= 0°48'23.53"	R= 7103.9931'	Lc= 230.4491'
		PI					V= 45MPH	Et= 1.14"	Ea= 1.50"	Eu= -0.36"
		PCC	1315+40.74		2992628.5820	669705.2812	Tc= 115.2356'	Ec= 0.9346'	CC:N 2985568.1642	E 668919.6492
CURVE	C 24-1/2	PCC	1315+40.74		2992628.5820	669705.2812	△c = 4°24'04.16"	Dc= 1°09'34.63"	R= 4941.0000'	Lc= 379.5348'
		PI					V= 45MPH	Et= 1.64"	Ea= 1.50"	Eu= 0.14"
		CS	1319+20.28		2992656.0337	669326.8276	Tc= 189.8640'	Ec= 3.6465'	CC:N 2987717.8897	E 669158.8550
SPIRAL		CS	1319+20.28		2992656.0337	669326.8276	△s = 0°35'11.56"	Ls= 101.1633'	LT= 67.4426'	ST= 33.7214'
							X= 101.1622'	Y= 0.3452'	P= 0.0863'	Xo= 50.5815'
		ST	1320+21.44		2992658.7827	669225.7021				
TANGENT				N 88°38'18.10" W						
		ST	1320+21.44		2992658.7827	669225.7021				
				N 88°38'18.10" W						
TANGENT				N 88°38'18.10" W			NO. 15 RH CROSSOVER			
		PS	1320+94.35		2992660.5151	669152.8187				
	1			N 88°38'18.10" W						
				N 88°38'18.10" W						
TANGENT		PI	1321+34.32		2992661.4651	669112.8510				
				N 88°38'18.10" W						
TANGENT				N 88°38'18.10" W			NO. 15 LH CROSSOVER			
		PI	1326+66.33		2992674.1071	668580.9934				
	4			N 88°38'18.10" W						
				N 88°38'18.10" W						
TANGENT		PS	1327+06.31		2992675.0571	668541.0256				
				N 88°38'18.10" W						
SPIRAL		TS	1327+75.01		2992676.6897	668472.3417	△s = 1°27'06.74"	Ls= 110.0000'	LT= 73.3358'	ST= 36.6689'
							X= 109.9929'	Y= 0.9291'	P= 0.2323'	Xo= 54.9988'
		SC	1328+85.01		2992680.2323	668362.4019				
CURVE	C 25-1/2	SC	1328+85.01		2992680.2323	668362.4019	△c = 3°49'40.87"	Dc= 2°38'24.00"	R= 2170.4867'	Lc= 145.0008'
		PI			2992681.0304	668289.7271	V= 45MPH	Et= 3.74"	Ea= 1.75"	Eu= 1.99"
		CS	1330+30.02		2992692.1817	668217.9086	Tc= 72.5338'	Ec= 1.2116'	CC:N 2994848.1026	E 668468.9409
SPIRAL		CS	1330+30.02		2992692.1817	668217.9086	△s = 1°27'06.74"	Ls= 110.0000'	LT= 73.3358'	ST= 36.6689'
							X= 109.9929'	Y= 0.9291'	P= 0.2323'	Xo= 54.9988'
		ST	1331+40.02		2992706.7474	668108.8804				
TANGENT				N 81°54'23.75" W						
		ST	1331+40.02		2992706.7474	668108.8804				
				N 81°54'23.75" W						

TRACK GEOMETRY DATA - TRACK 2 CONTINUED

ELEMENT	CURVE No.	POINT	STATION	BEARING	COORDINATES Northing	COORDINATES Easting	DATA			
SPIRAL		TS	1341+24.49		2992845.3493	667134.2085	△ s = 4°54'56.15"	Ls= 490.9424'	LT= 327.4212'	ST= 163.7623'
							X= 490.5811'	Y= 14.0325'	P= 3.5090'	Xo= 245.4110'
		SC	1346+15.44		2992928.3095	666650.4892				
CURVE	C 25-2/2	SC	1346+15.44		2992928.3095	666650.4892	△c = 57°00'48.56"	Dc= 2°00'09.42"	R= 2861.1904'	Lc= 2846.9487'
		PI			2993132.0809	665117.8624	V= 60MPH	Et= 5.04"	Ea= 2.50"	Eu= 2.54"
		CS	1374+62.38		2994738.5373	664605.5315	Tc= 1553.9357'	Ec= 394.7468'	CC:N 2995716.0667	E 667294.5549
SPIRAL		CS	1374+62.38		2994738.5373	664605.5315	△ s = 2°11'38.29"	Ls= 219.1212'	LT= 146.0921'	ST= 73.0506'
							X= 219.0891'	Y= 2.7966'	P= 0.6992'	Xo= 109.5553'
		ST	1376+81.51		2994946.3036	664535.9540				
TANGENT				N 17°47'00.75" W						
		ST	1376+81.51		2994946.3036	664535.9540				
				N 17°47'00.75" W						
TANGENT				N 17°47'00.75" W						
		POL	1381+00.00		2995344.8016	664408.1365				
				N 17°47'00.75" W						

COMMONWEALTH OF MASSACHUSETTS
ERIC C. DIVIRGILIO
CIVIL
No. 46256
REGISTERED PROFESSIONAL ENGINEER
5-17-2012

MASSACHUSETTS BAY TRANSPORTATION AUTHORITY

FITCHBURG COMMUTER RAIL LINE
IMPROVEMENT PROJECT
CONTRACT NO. G67CN01

SOUTH ACTON STATION
TRACK 2
GEOMETRY DATA

ISSUE	DATE	DESCRIPTION	BY	CHKD.	APP.

HNTB
300 APOLLO DRIVE
CHELMSFORD, MA 01824
(978) 905-4000

PROJECT MANAGER 5/30/12 Date

MASSACHUSETTS BAY TRANSPORTATION AUTHORITY
APPROVED BY:
PROJECT MANAGER 6/30/12 Date

HORIZ: AS SHOWN	DES. BY SS	DR. BY SS	CHK. BY ECD	PLAN NO. 168502
VERT: AS SHOWN				SHEET T-75
DATE: 5/17/12				

ISSUE

PLOT DATE: 18-MAY-2012
FILE NAME: \\lexw00\pmwork\JOBS\43919 Fitchburg commuter rail\TECHPROD\Cadd\Track\Sheets\South Acton Contractor\TR-SouthActon-Geo-001P30.dgn
XREF FILES:

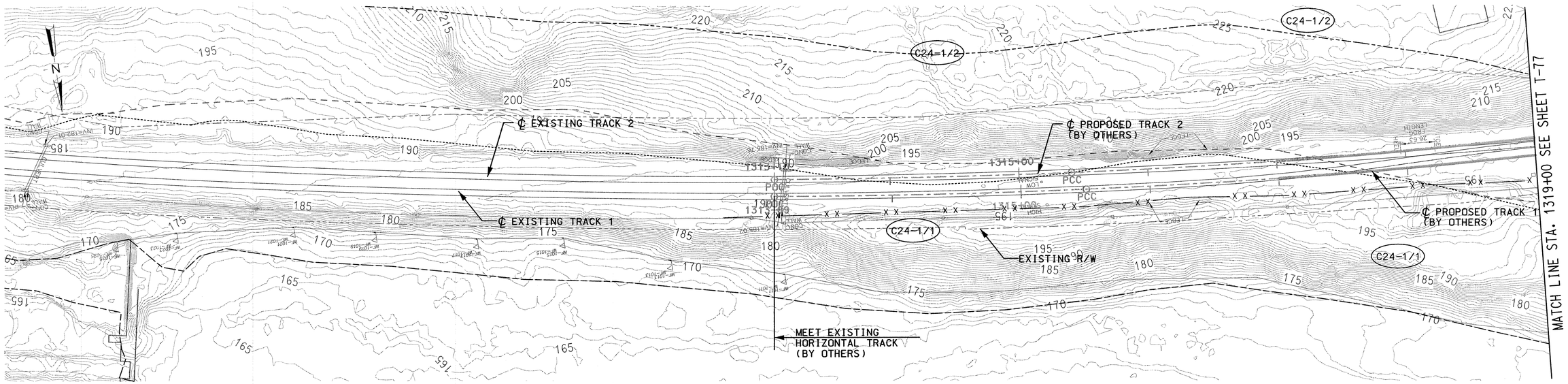

PLAN

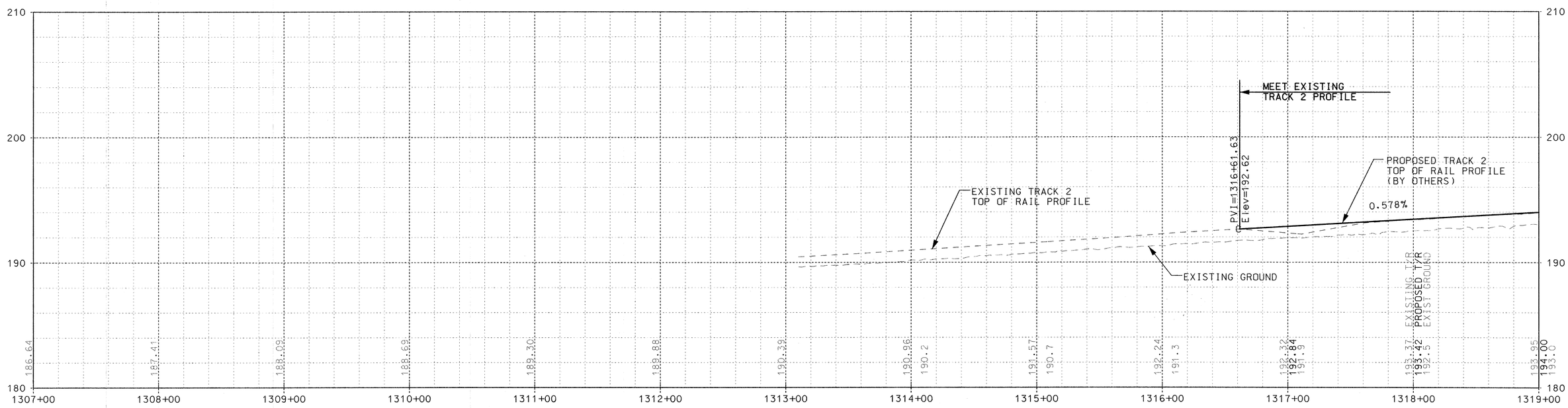

PROFILE

NOTES:

1. FOR COORDINATE GEOMETRY, SEE SHEETS T-74 AND T-75.
2. TRACK TO BE CONSTRUCTED IN PHASES AS DEFINED ON PHASING PLANS. (ALL TRACK WORK SHALL BE BY OTHERS. COORDINATE AS REQUIRED.)
3. FOR TRACK 1 PROFILE, SEE SHEET T-83.
4. SEE DRAINAGE DETAILS FOR DRAINAGE AND GRADING.

HORIZ. 40 0 40 80
VERT. 4 0 4 8
(SCALE IN FEET)

COMMONWEALTH OF MASSACHUSETTS
ERIC C. DIVIRGILIO
CIVIL
No. 46256
REGISTERED PROFESSIONAL ENGINEER
5/17/2012

MASSACHUSETTS BAY TRANSPORTATION AUTHORITY

FITCHBURG COMMUTER RAIL LINE
IMPROVEMENT PROJECT
CONTRACT NO. G67CN01

SOUTH ACTON STATION
TRACK PLAN AND PROFILE
STA. 1307+00 TO STA. 1319+00

ISSUE	DATE	DESCRIPTION	BY	CHKD.	APP.

HNTB
300 APOLLO DRIVE
CHELMSFORD, MA 01824
(978) 905-4000

PROJECT MANAGER 5/30/12 Date

MASSACHUSETTS BAY TRANSPORTATION AUTHORITY
APPROVED BY:
PROJECT MANAGER 6/30/12 Date

HORIZ: AS SHOWN	DES. BY	DR. BY	CHK. BY	PLAN NO. 168503
VERT: AS SHOWN	SS	SS	ECD	
DATE: 5/17/12				SHEET T-76

ISSUE

PLOT DATE: 18-MAY-2012
FILE NAME: \\lexwo0\pmwork\JOBS\43919 Fitchburg commuter rail\TECHPROD\Cudd\Track\Sheets\South Acton Contractor\TR-South Acton Station-001P30.dgn
XREF FILES:

EAST TO BOSTON

WEST TO FITCHBURG
TOWN OF ACTON

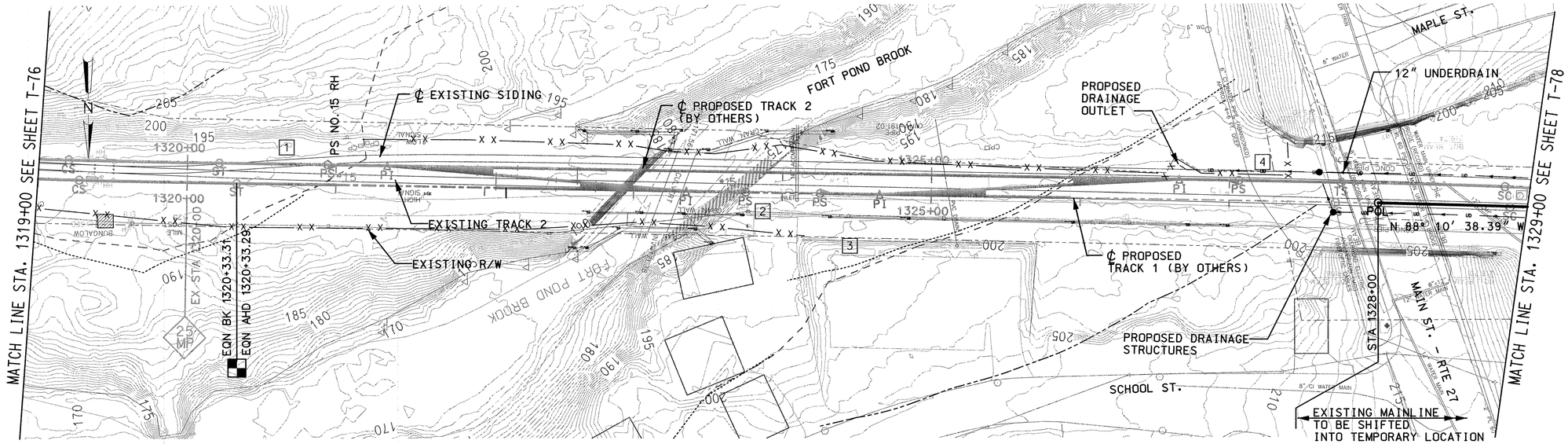

PLAN

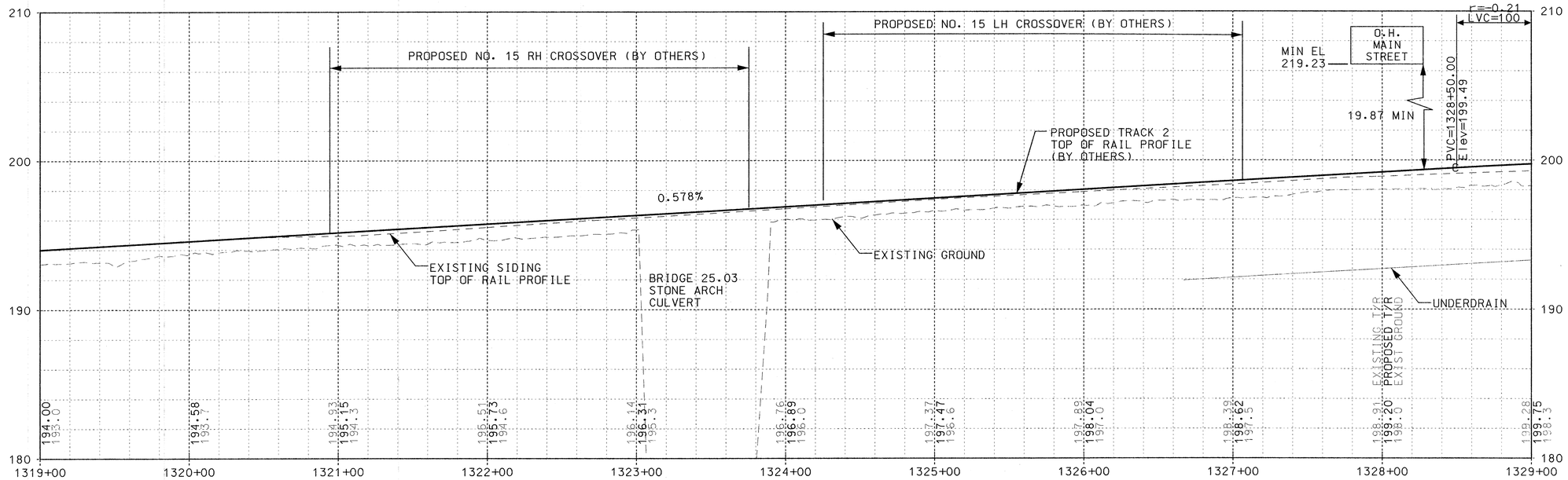

PROFILE

NOTES:

1. FOR COORDINATE GEOMETRY, SEE SHEETS T-74 AND T-75.
2. TRACK TO BE CONSTRUCTED IN PHASES AS DEFINED ON PHASING PLANS. (ALL TRACK WORK SHALL BE BY OTHERS. COORDINATE AS REQUIRED.)
3. FOR TRACK 1 PROFILE, SEE SHEET T-83.
4. SEE DRAINAGE DETAILS FOR DRAINAGE AND GRADING.

HORIZ. 40 0 40 80
VERT. 4 0 4 8
(SCALE IN FEET)

COMMONWEALTH OF MASSACHUSETTS ERIC C. DIVIRGILIO CIVIL No. 46256 REGISTERED PROFESSIONAL ENGINEER
5-17-2012

MASSACHUSETTS BAY TRANSPORTATION AUTHORITY

FITCHBURG COMMUTER RAIL LINE
IMPROVEMENT PROJECT
CONTRACT NO. G67CN01

SOUTH ACTON STATION
TRACK PLAN AND PROFILE
STA. 1319+00 TO STA. 1329+00

ISSUE	DATE	DESCRIPTION	BY	CHKD.	APP.

HNTB 300 APOLLO DRIVE CHELMSFORD, MA 01824 (978) 905-4000

PROJECT MANAGER 5/30/12 Date

MASSACHUSETTS BAY TRANSPORTATION AUTHORITY
APPROVED BY: PROJECT MANAGER 6/30/12 Date

HORIZ: AS SHOWN	DES. BY SS	DR. BY SS	CHK. BY ECD	PLAN NO. 168504	ISSUE
VERT: AS SHOWN					
DATE: 5/17/12				SHEET T-77	

PLOT DATE: 18-MAY-2012
FILE NAME: \\lexw00\pmwork\JOBS\43919 Fitchburg commuter rail\TECHPROD\Cadd\Track\Sheets\South Acton Contractor\TR-South Acton Station-002P30.dgn
XREF FILES:

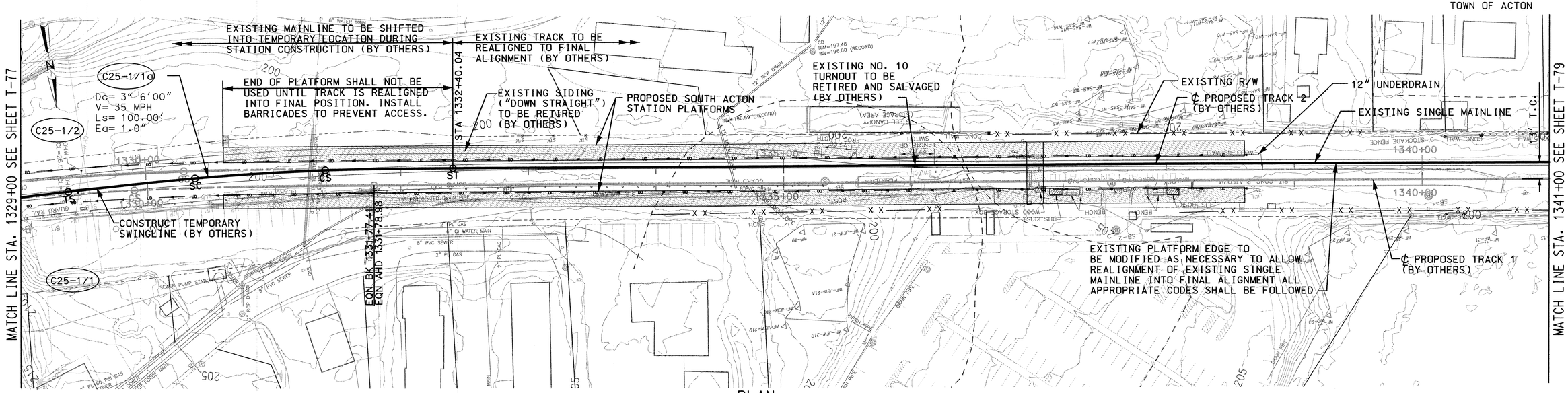

PLAN

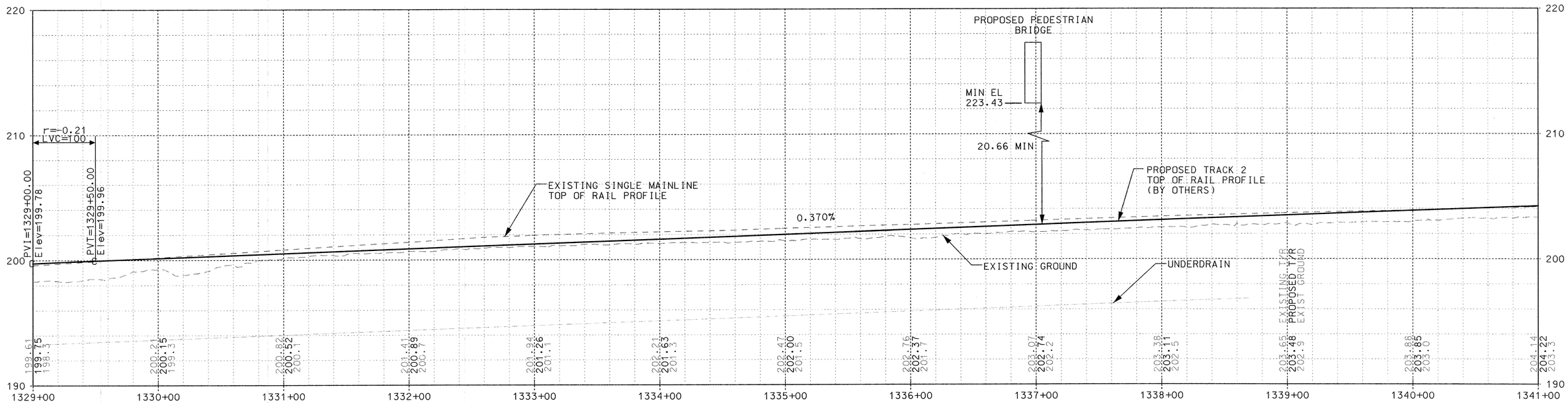

PROFILE

NOTES:

1. FOR COORDINATE GEOMETRY, SEE SHEETS T-74 AND T-75.
2. TRACK TO BE CONSTRUCTED IN PHASES AS DEFINED ON PHASING PLANS. (ALL TRACK WORK SHALL BE BY OTHERS. COORDINATE AS REQUIRED.)
3. FOR TRACK 1 PROFILE, SEE SHEET T-84.
4. SEE DRAINAGE DETAILS FOR DRAINAGE AND GRADING.

HORIZ. 40 0 40 80
VERT. 4 0 4 8
(SCALE IN FEET)

COMMONWEALTH OF MASSACHUSETTS ERIC C. DIMIRGILIO CIVIL No. 46256 REGISTERED PROFESSIONAL ENGINEER 5-17-2012

MASSACHUSETTS BAY TRANSPORTATION AUTHORITY

FITCHBURG COMMUTER RAIL LINE IMPROVEMENT PROJECT CONTRACT NO. G67CN01

SOUTH ACTON STATION TRACK PLAN AND PROFILE STA. 1329+00 TO STA. 1341+00

ISSUE	DATE	DESCRIPTION	BY	CHKD.	APP.

HNTB 300 APOLLO DRIVE CHELMSFORD, MA 01824 (978) 905-4000

PROJECT MANAGER 6/30/12 Date

MASSACHUSETTS BAY TRANSPORTATION AUTHORITY APPROVED BY: PROJECT MANAGER 6/30/12 Date

HORIZ: AS SHOWN	DES. BY	DR. BY	CHK. BY	PLAN NO. 168505	ISSUE
VERT: AS SHOWN	SS	SS	ECD		
DATE: 5/17/12				SHEET T-78	

PLOT DATE: 18-MAY-2012
FILE NAME: \\ex.wo0\pmwork\JOBS\43919 Fitchburg commuter rail\TECHPROD\Cadd\Track\Sheets\South Acton Contractor\TR-South Acton Station-003P30.dgn
XREF FILES:

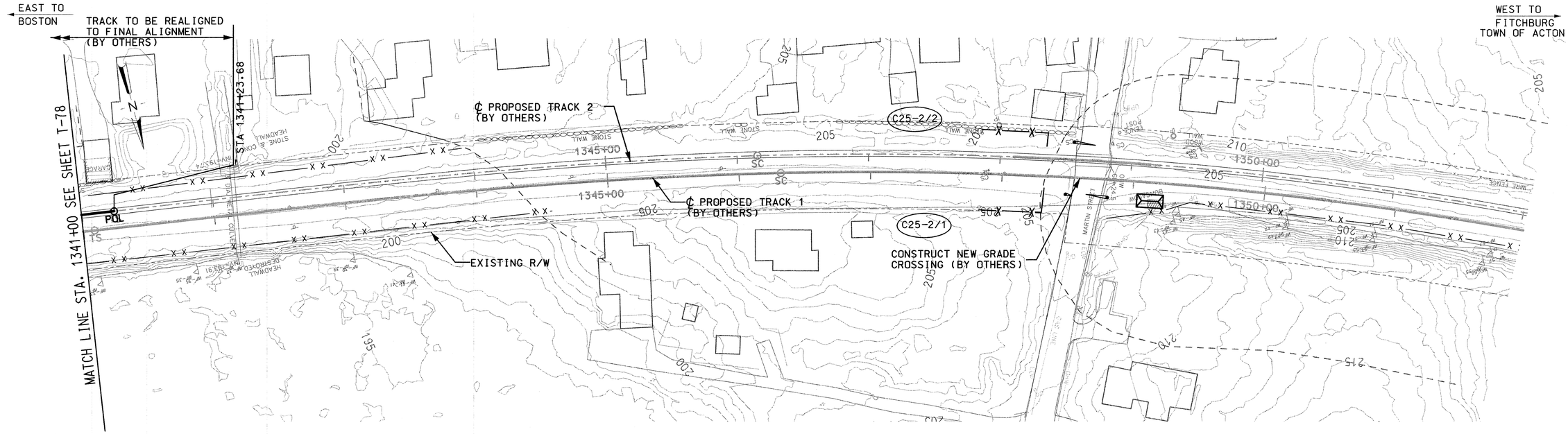

PLAN

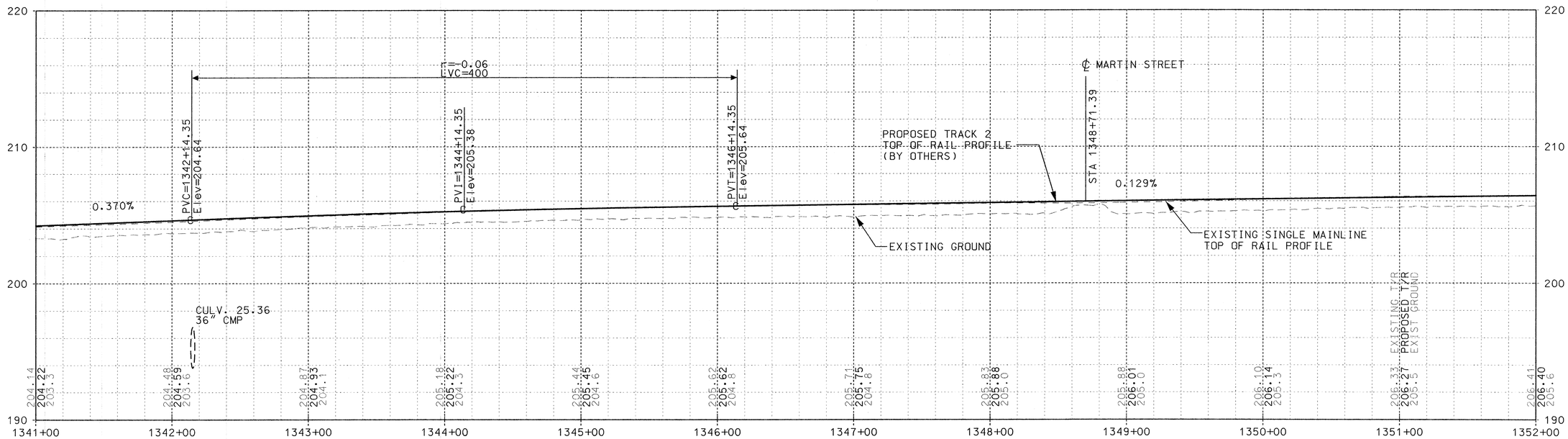

PROFILE

NOTES:

1. FOR COORDINATE GEOMETRY, SEE SHEETS T-74 AND T-75.
2. TRACK TO BE CONSTRUCTED IN PHASES AS DEFINED ON PHASING PLANS. (ALL TRACK WORK SHALL BE BY OTHERS. COORDINATE AS REQUIRED.)
3. FOR TRACK 1 PROFILE, SEE SHEET T-84.
4. SEE DRAINAGE DETAILS FOR DRAINAGE AND GRADING.

HORIZ. 40 0 40 80
VERT. 4 0 4 8
(SCALE IN FEET)

COMMONWEALTH OF MASSACHUSETTS ERIC C. DIVIRGILIO CIVIL No. 46256 REGISTERED PROFESSIONAL ENGINEER 5-17-2012

MASSACHUSETTS BAY TRANSPORTATION AUTHORITY

FITCHBURG COMMUTER RAIL LINE IMPROVEMENT PROJECT CONTRACT NO. G67CN01

SOUTH ACTON STATION
TRACK PLAN AND PROFILE
STA. 1341+00 TO STA. 1352+00

ISSUE	DATE	DESCRIPTION	BY	CHKD.	APP.

HNTB 300 APOLLO DRIVE CHELMSFORD, MA 01824 (978) 905-4000

PROJECT MANAGER 5/20/12 Date

MASSACHUSETTS BAY TRANSPORTATION AUTHORITY APPROVED BY: PROJECT MANAGER 6/30/12 Date

HORIZ: AS SHOWN	DES. BY	DR. BY	CHK. BY	PLAN NO. 168506
VERT: AS SHOWN	SS	SS	ECD	
DATE: 5/17/12				SHEET T-79

ISSUE

PLOT DATE: 18-MAY-2012
FILE NAME: \\lexw00\prnwork\JOBS\43919 Fitchburg commuter rail\TECHPROD\Cadd\Track\Sheets\South Acton Contractor\TR-South Acton Station-004P30.dgn
XREF FILES:

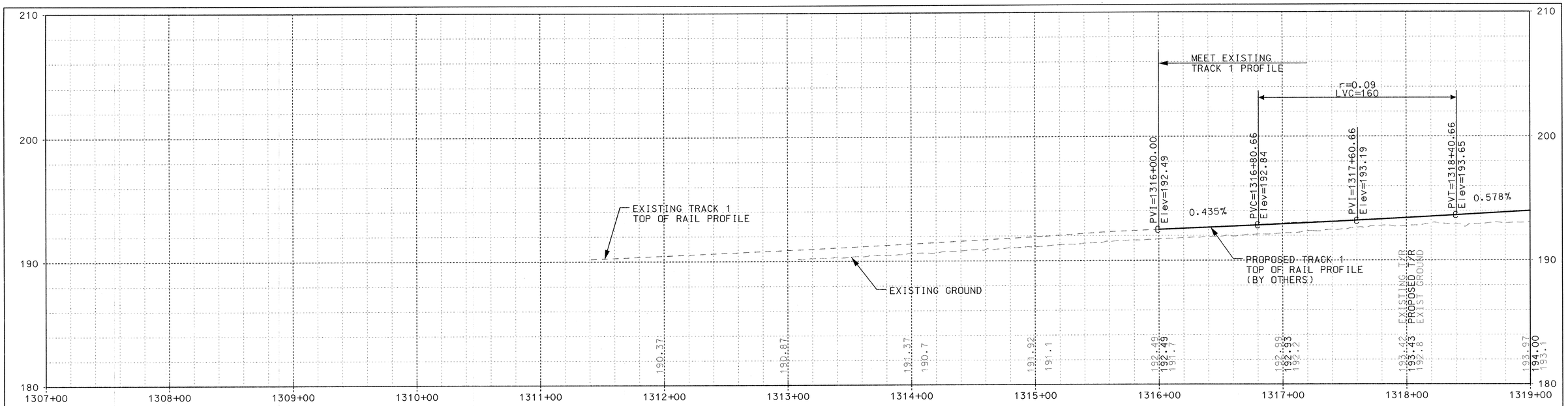

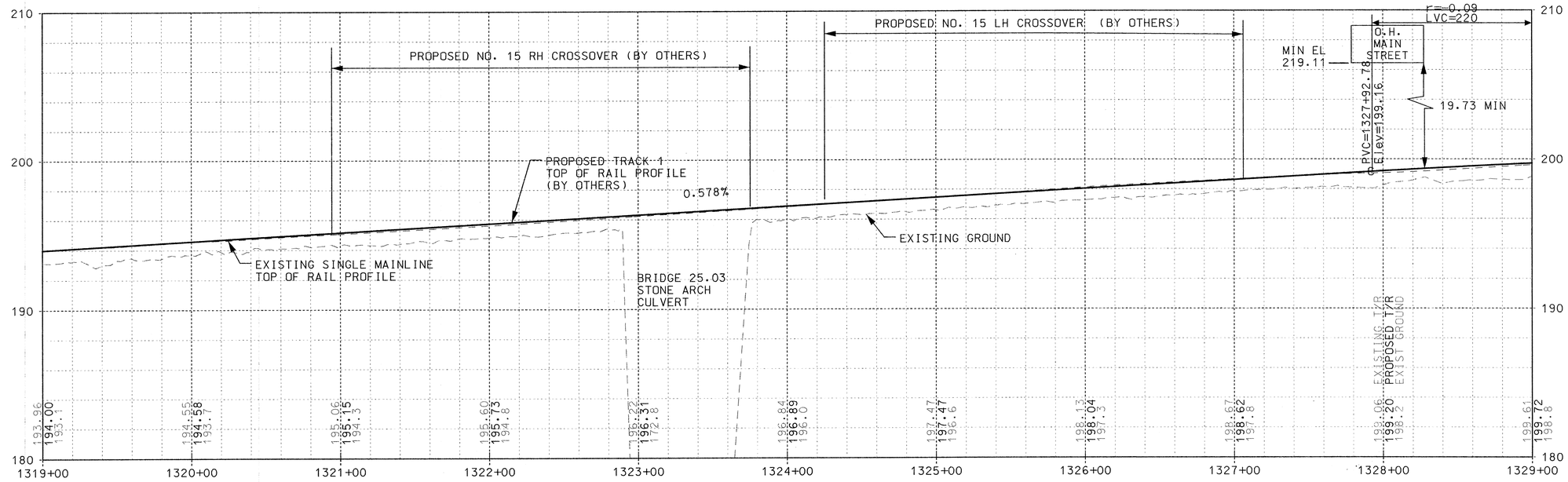

PROFILE

HORIZ. 40 0 40 80

VERT. 4 0 4 8

(SCALE IN FEET)

COMMONWEALTH OF MASSACHUSETTS
ERIC C. DIVIRGILIO
CIVIL
No. 46256
PROFESSIONAL ENGINEER
5-17-2012

MASSACHUSETTS BAY TRANSPORTATION AUTHORITY

FITCHBURG COMMUTER RAIL LINE
IMPROVEMENT PROJECT
CONTRACT NO. G67CN01

SOUTH ACTON STATION
TRACK 1 PROFILE
STA. 1307+00 TO STA. 1329+00

ISSUE	DATE	DESCRIPTION	BY	CHKD.	APP.

HNTB
300 APOLLO DRIVE
CHELMSFORD, MA 01824
(978) 905-4000

PROJECT MANAGER — Date 5/30/12

MASSACHUSETTS BAY TRANSPORTATION AUTHORITY
APPROVED BY: PROJECT MANAGER — Date 6/30/12

		DES. BY	DR. BY	CHK. BY
HORIZ:	AS SHOWN	SS	SS	ECD
VERT:	AS SHOWN			
DATE:	5/17/12			

PLAN NO. 168507

SHEET T-83

ISSUE

PLOT DATE: 18-MAY-2012
FILE NAME: \\exwi00\pmwork\JOBS\43919 Fitchburg commuter rail\TECHPROD\Cadd\Track\Sheets\South Acton Contractor\TR-South Acton Station-011P30.dgn
XREF FILES:

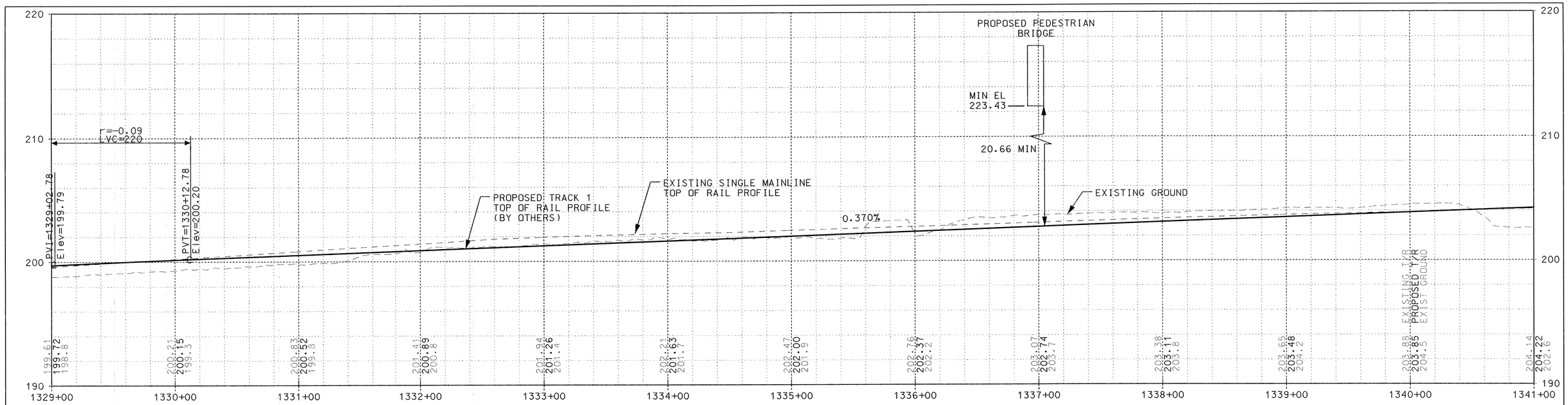

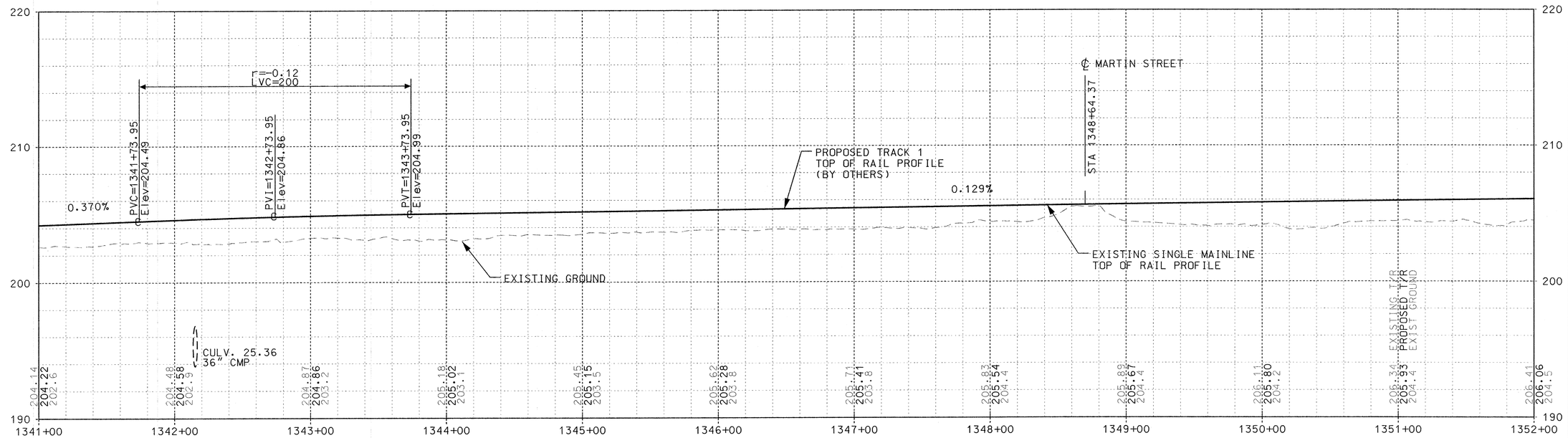

PROFILE

HORIZ. 40 0 40 80
VERT. 4 0 4 8
(SCALE IN FEET)

ISSUE	DATE	DESCRIPTION	BY	CHKD.	APP.

COMMONWEALTH OF MASSACHUSETTS
ERIC C. DIVIRGILIO
CIVIL
No. 46256
REGISTERED PROFESSIONAL ENGINEER
5-17-2012

MASSACHUSETTS BAY TRANSPORTATION AUTHORITY

FITCHBURG COMMUTER RAIL LINE
IMPROVEMENT PROJECT
CONTRACT NO. G67CN01

SOUTH ACTON STATION
TRACK 1 PROFILE
STA. 1329+00 TO STA. 1352+00

HNTB
300 APOLLO DRIVE
CHELMSFORD, MA 01824
(978) 905-4000

PROJECT MANAGER — Date 5/30/12

MASSACHUSETTS BAY TRANSPORTATION AUTHORITY
APPROVED BY:
PROJECT MANAGER — Date 6/30/12

		DES. BY	DR. BY	CHK. BY
HORIZ:	AS SHOWN	SS	SS	ECD
VERT:	AS SHOWN			
DATE:	5/17/12			

PLAN NO. 168508
SHEET T-84
ISSUE

PLOT DATE: 18-MAY-2012
FILE NAME: \\lexwOC\pmwork\JOBS\43919 Fitchburg commuter rail\TECHPROD\Cadd\Track\Sheets\South Acton Contractor\TR-South Acton Station-012P30.dgn
XREF FILES:

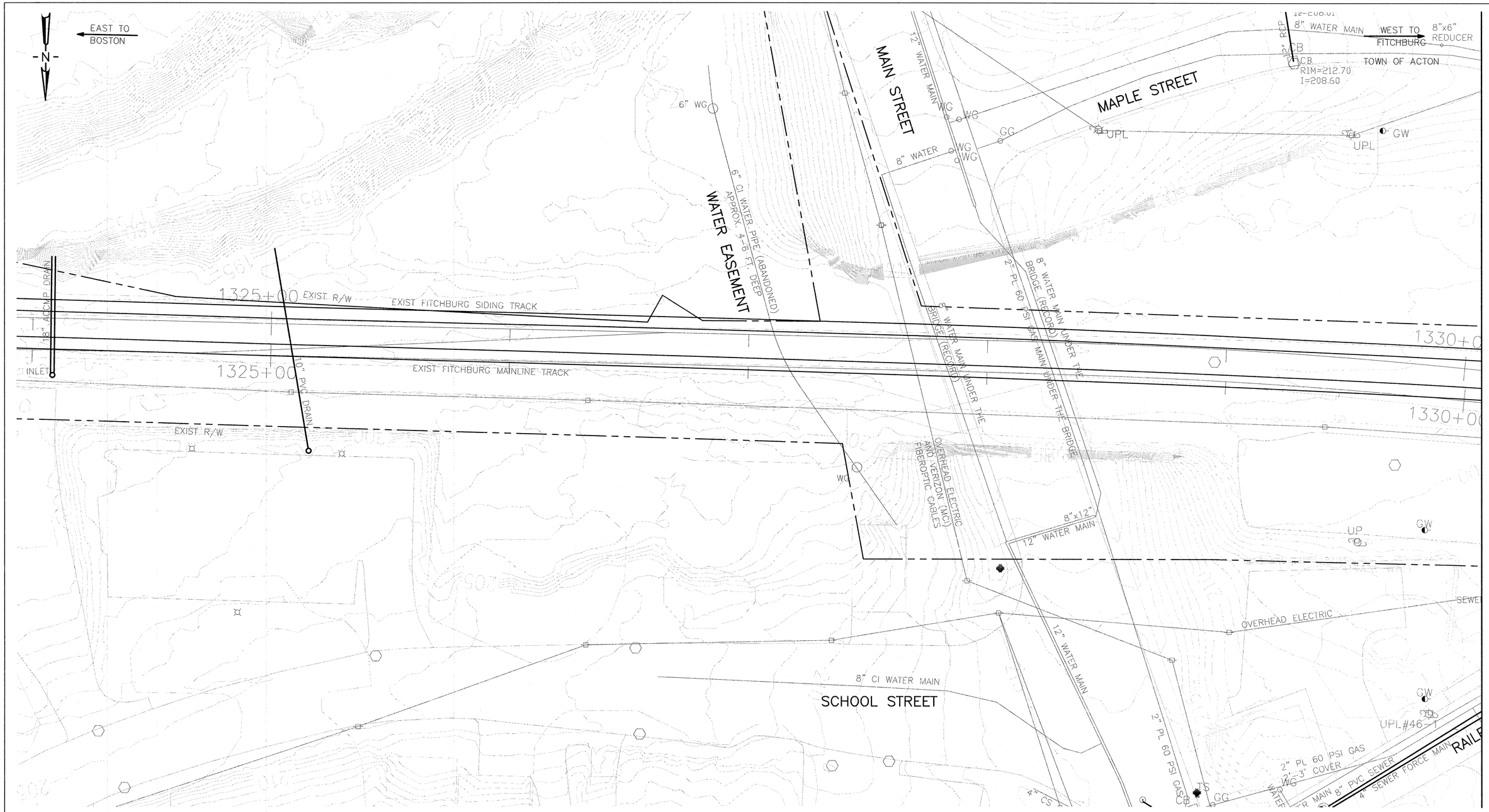

MATCHLINE SEE SHEET U-42

20 0 20 40

(SCALE IN FEET)

ISSUE	DATE	DESCRIPTION	BY	CHKD.	APP.

C&C Consulting Engineers, LLC
214 LINCOLN STREET
BOSTON, MA 02134
(617) 254-6930

COMMONWEALTH OF MASSACHUSETTS
PO-SHANG CHEN
CIVIL
NO. 35436
REGISTERED PROFESSIONAL ENGINEER

MASSACHUSETTS BAY TRANSPORTATION AUTHORITY

FITCHBURG COMMUTER RAIL LINE
IMPROVEMENT PROJECT
CONTRACT NO. G67CN01

EXISTING UTILITY PLAN
MAIN ST. BRIDGE EASEMENT (MP 25.20)
ACTON, MA

HNTB
300 APOLLO DRIVE
CHELMSFORD, MA 01824
(978) 905-4000

PROJECT MANAGER — Date 5/30/12

MASSACHUSETTS BAY TRANSPORTATION AUTHORITY
APPROVED BY:
PROJECT MANAGER — Date 6/30/12

HORIZ: 1"=20'	DES. BY	DR. BY	CHK. BY	PLAN NO. 168509	ISSUE
VERT:	SM	WL	SM		
DATE: 5/17/12				SHEET U-41	

FILE NAME: M:\MBTA - Fitchburg Commuter Rail Line Improvement\Fitchburg PS&E\Submittal '12-05-17\ Utilities-Acton.dwg
PLOT DATE: May 15, 2012 - 3:31pm

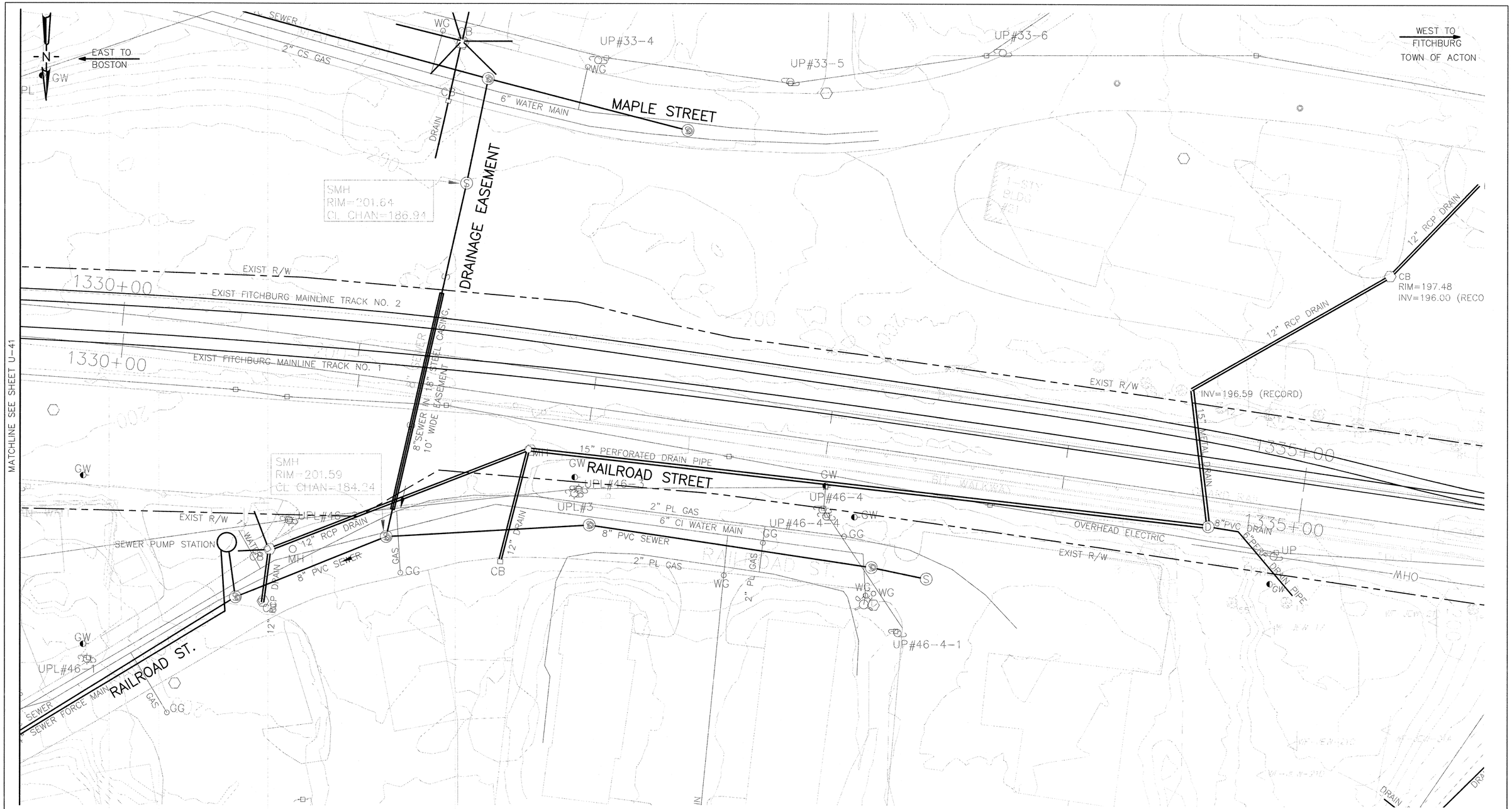

20 0 20 40

(SCALE IN FEET)

ISSUE	DATE	DESCRIPTION	BY	CHKD.	APP.

C&C Consulting Engineers, LLC
214 LINCOLN STREET
BOSTON, MA 02134
(617) 254-6930

COMMONWEALTH OF MASSACHUSETTS
PO-SHANG CHEN
CIVIL
NO. 35436
REGISTERED PROFESSIONAL ENGINEER

MASSACHUSETTS BAY TRANSPORTATION AUTHORITY

FITCHBURG COMMUTER RAIL LINE
IMPROVEMENT PROJECT
CONTRACT NO. G67CN01

EXISTING UTILITY PLAN
RAILROAD ST. (MP. 25.30)
ACTON, MA

HNTB
300 APOLLO DRIVE
CHELMSFORD, MA 01824
(978) 905-4000

PROJECT MANAGER 5/30/12 Date

MASSACHUSETTS BAY TRANSPORTATION AUTHORITY
APPROVED BY:
PROJECT MANAGER 6/30/12 Date

HORIZ: 1"=20'	DES. BY	DR. BY	CHK. BY	PLAN NO. 168510	ISSUE
VERT:	SM	WL	SM		
DATE: 5/17/12				SHEET U-42	

FILE NAME: M:\MBTA - Fitchburg Commuter Rail Line Improvement\Fitchburg PS&E\Submittal '12-05-17\ Utilities-Acton.dwg
PLOT DATE: May 15, 2012 - 3:29pm

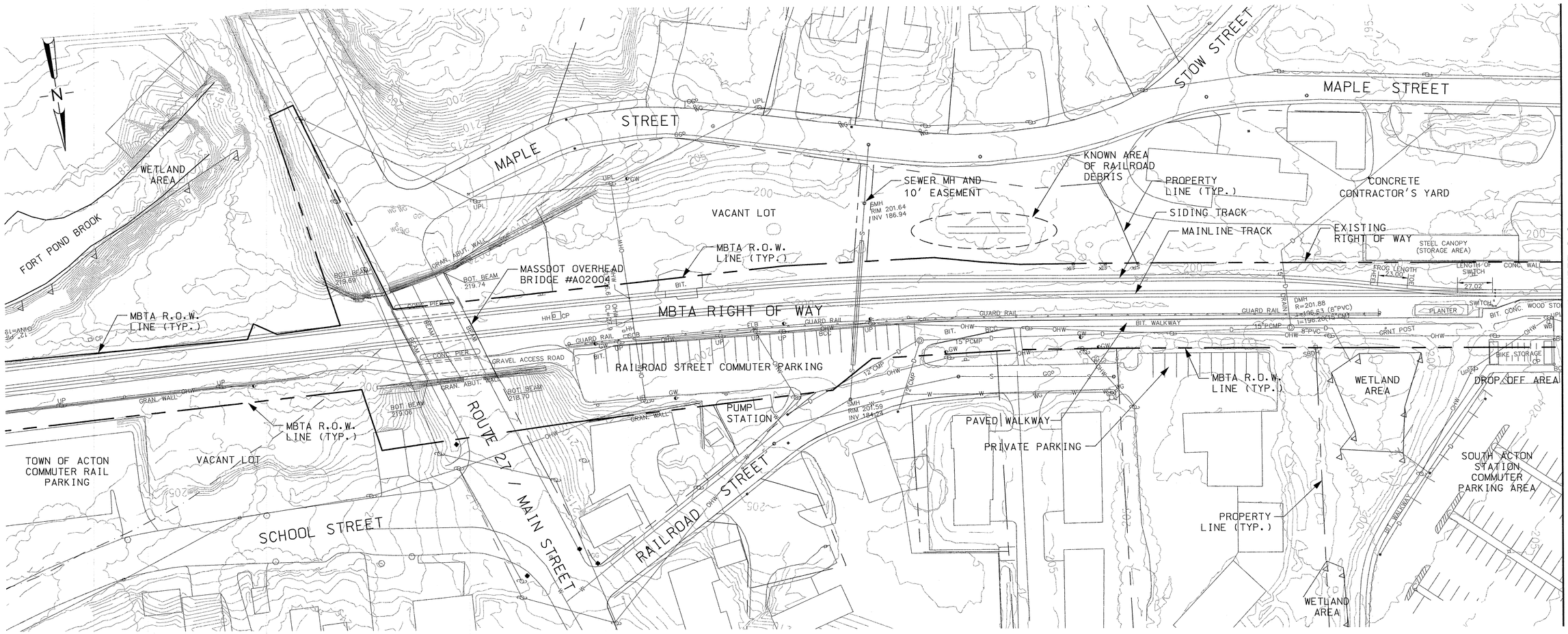

PLAN

NOTES:

1. TOPOGRAPHIC SURVEY: TOPOGRAPHIC SURVEY SHOWN IS BASED ON AN AERIAL SURVEY (LIDAR) PERFORMED BY JOHN CHANCE LAND SURVEYS, INC. IN APRIL, 2008 AND SUPPLEMENTED, AS DIRECTED, WITH GROUND SURVEY PERFORMED BY ASEC CORPORATION IN 2008 AND BRYANT ASSOCIATES IN 2010.

2. PROPERTY LINES: RIGHT OF WAY AND PROPERTY LINES WERE DEVELOPED BY REFERENCE TO RAILROAD VALUATION PLAN V.36.1, SHEETS 24 AND 25, LAST REVISION DATED APRIL 1967, AND TO TOWN OF ACTON ASSESSOR'S MAP H-2A. LOCATIONS ARE APPROXIMATE.

3. UTILITY LINES: UNDERGROUND UTILITY LINE INFORMATION WAS DEVELOPED BY REFERENCE TO THE RECORDS OF THE TOWN OF ACTON WATER DISTRICT AND ENGINEERING DEPT., NATIONAL GRID, AND OTHER UTILITIES. ALL LOCATIONS ARE APPROXIMATE. CONTRACTOR TO FIELD VERIFY UTILITIES PRIOR TO ANY WORK. SEE GENERAL UTILITY NOTES.

4. WETLANDS: WETLAND AREAS WERE DELINEATED AND CHARACTERIZED IN THE GROWING SEASON OF 2008 BY JACOBS ENGINEERING. WETLANDS FLAGS WERE SURVEY LOCATED BY ASEC IN 2008. CONTRACTOR SHALL NOT DISTURB WETLAND FLAGS.

5. RAILROAD STREET COMMUTER PARKING AREA: THE RAILROAD STREET COMMUTER PARKING AREA IS LOCATED ON MBTA PROPERTY. ACCESS IS FROM RAILROAD STREET VIA MAIN STREET/ROUTE 27. THE LOT HAS A BITUMINOUS CONCRETE PAVEMENT SURFACE AND IS MARKED FOR 26 REGULAR PARKING SPACES AND ONE ACCESSIBLE PARKING SPACE. THERE IS GENERAL OVERHEAD LIGHTING. THE TOWN OF ACTON LEASES THIS PROPERTY FROM THE MBTA FOR PARKING PURPOSES.

6. ACTON COMMUTER PARKING AREA: THE ACTON COMMUTER PARKING AREA IS LOCATED ON TOWN OF ACTON PROPERTY. ACCESS IS FROM CENTRAL STREET TO THE NORTH. IT HAS A BITUMINOUS CONCRETE PAVEMENT SURFACE WITH RAISED ISLANDS WITH PAVERS AND PLANTINGS. THE PAVED AREA IS MARKED FOR 263 REGULAR PARKING SPACES AND 6 ACCESSIBLE PARKING SPACES. THERE IS OVERHEAD LIGHTING THROUGHOUT THE PARKING AREA. SOME PARKING SPACES ARE PERMIT SPACES AND SOME ARE METERED.

7. ZONING DISTRICT: THE STATION AREA IS WITHIN THE SOUTH ACTON VILLAGE ZONING DISTRICT AS SHOWN ON THE ZONING MAP OF THE TOWN OF ACTON AMENDED THROUGH APRIL 2005.

8. FLOODPLAINS: THE AREA IS SHOWN ON THE TOWN OF ACTON FLOOD INSURANCE RATE MAP, COMMUNITY PANEL NUMBER 250176 0003C. THE EXISTING STATION IS NOT IN A FLOODPLAIN; THE WETLAND AREA TO THE WEST OF THE STATION IS IN FLOOD ZONE "AE" TO ELEVATION 199.

9. BENCH MARKS: MASSDOT BENCHMARKS ARE LOCATED IN THE VICINITY OF THE MAIN STREET BRIDGE. FOR RAILROAD R.O.W. PROJECT SURVEY CONTROL SEE THE 'SC' DRAWINGS.

10. HABITATS: THE PROJECT AREA ENCOMPASSES NO PRIORITY HABITATS FOR RARE SPECIES, ESTIMATED HABITATS FOR RARE WILDLIFE, OR CERTIFIED VERNAL POOLS

11. GEOTECHNICAL INFORMATION: A GEOTECHNICAL EXPLORATION PROGRAM WAS CARRIED OUT IN 2009 WHICH INCLUDED SEVERAL BORINGS WITHIN THE RAILROAD RIGHT OF WAY THROUGH THE STATION AREA.

HORIZ. 40 0 40 80
(SCALE IN FEET)

COMMONWEALTH OF MASSACHUSETTS
JONATHAN P. BRUNEAU
CIVIL
No. 46035
REGISTERED PROFESSIONAL ENGINEER
5-21-12

ISSUE	DATE	DESCRIPTION	BY	CHKD.	APP.

JACOBS 343 CONGRESS STREET BOSTON, MA 02110 (617) 242-9222

MASSACHUSETTS BAY TRANSPORTATION AUTHORITY

FITCHBURG COMMUTER RAIL LINE IMPROVEMENT PROJECT CONTRACT NO. G67CN01

SOUTH ACTON STATION EXISTING CONDITIONS PLAN SHEET 1 OF 2

HNTB 300 APOLLO DRIVE CHELMSFORD, MA 01824 (978) 905-4000

PROJECT MANAGER 5/30/12 Date

MASSACHUSETTS BAY TRANSPORTATION AUTHORITY
APPROVED BY: PROJECT MANAGER 6/30/12 Date

HORIZ: AS SHOWN	DES. BY	DR. BY	CHK. BY	PLAN NO. 168511
VERT: NONE	JPB	KMB	JM	
DATE: 5/17/12				SHEET C-1

ISSUE

FILE NAME: P:\MBTA\2008\E2X37800\CAD\700CADD\702STATIONS\South Acton\Civil\PS&E\ C-1 & C-2 Existing Conditions Plans.dwg
PLOT DATE: May 21, 2012 – 7:24am

EAST TO BOSTON

WEST TO FITCHBURG

TOWN OF ACTON

MATCH LINE SEE SHEET C-1

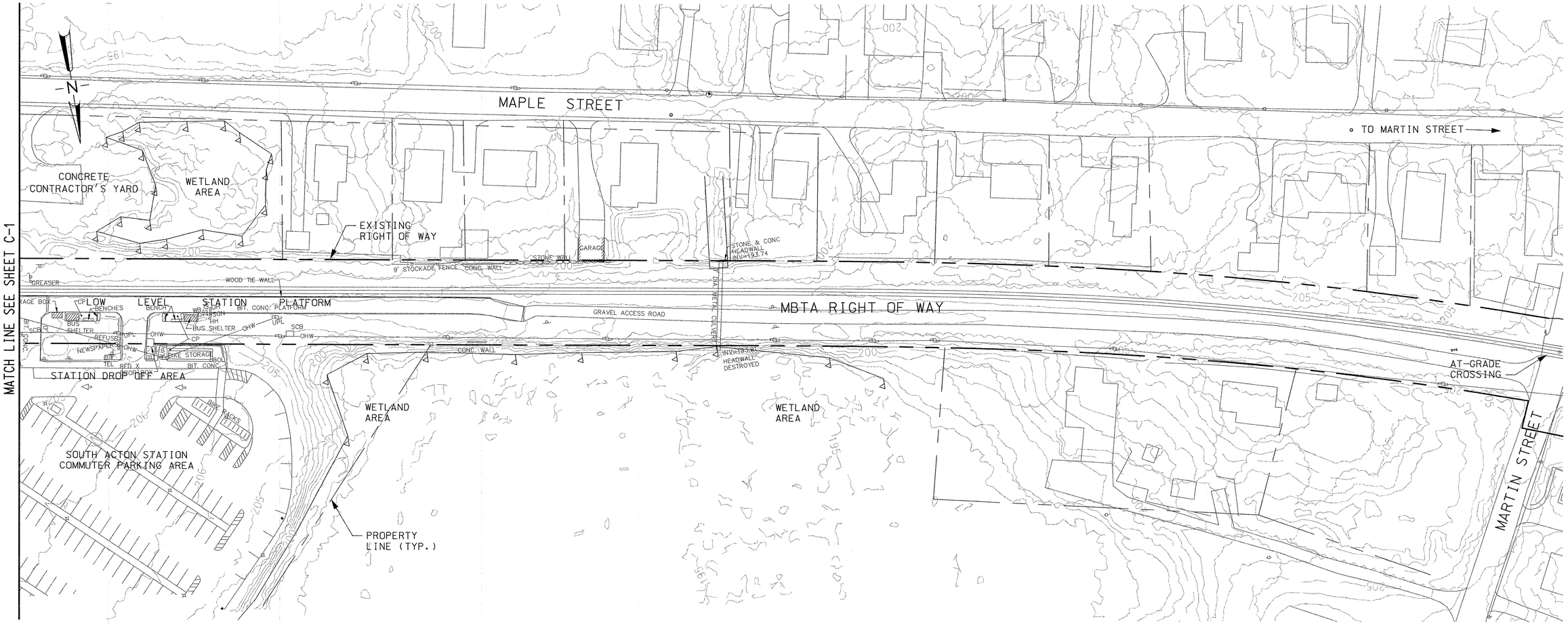

PLAN

NOTES:

1. FOR NOTES SEE SHEET C-1.

HORIZ. 40 0 40 80

(SCALE IN FEET)

ISSUE	DATE	DESCRIPTION	BY	CHKD.	APP.

COMMONWEALTH OF MASSACHUSETTS
JONATHAN P. BRUNEAU
CIVIL
No. 46035
REGISTERED PROFESSIONAL ENGINEER
5-21-12

MASSACHUSETTS BAY TRANSPORTATION AUTHORITY

FITCHBURG COMMUTER RAIL LINE
IMPROVEMENT PROJECT
CONTRACT NO. G67CN01

SOUTH ACTON STATION EXISTING CONDITIONS PLAN SHEET 2 OF 2

HNTB
300 APOLLO DRIVE
CHELMSFORD, MA 01824
(978) 905-4000

PROJECT MANAGER 5/21/12 Date

MASSACHUSETTS BAY TRANSPORTATION AUTHORITY
APPROVED BY:
PROJECT MANAGER 6/30/12 Date

JACOBS
343 CONGRESS STREET
BOSTON, MA 02110
(617) 242-9222

HORIZ: AS SHOWN	DES. BY	DR. BY	CHK. BY	PLAN NO. 168512	ISSUE
VERT: NONE	JPB	KMB	JM		
DATE: 5/17/12				SHEET C-2	

FILE NAME: P:\MBTA\2008\E2X37800\CAD\700CADD\702STATIONS\South Acton\Civil\PS&E\ C-1 & C-2 Existing Conditions Plans.dwg
PLOT DATE: May 21, 2012 - 7:25am

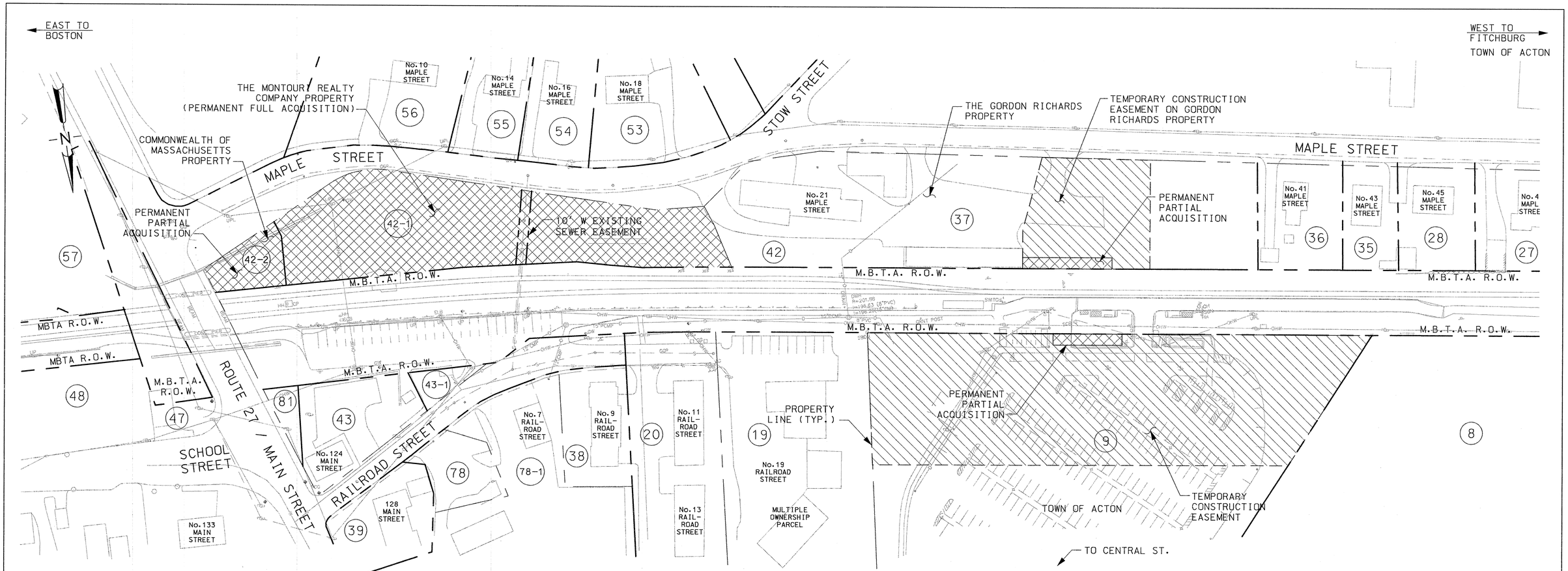

PLAN

NOTES:

1. PROPERTY LINES: PROPERTY LINES WERE DEVELOPED BY REFERENCE TO RAILROAD VALUATION PLAN V.36-1, SHEETS 24 AND 25 DATED DECEMBER 1975, AND TO TOWN OF ACTON ASSESSOR'S MAP H-2A. LOCATIONS ARE APPROXIMATE.
2. SEE SHEET C-4 FOR PROPERTY OWNERSHIP INFORMATION.

LEGEND:

(8) PARCEL NUMBER

PROPERTY LINE

TEMPORARY EASEMENT

PERMANENT ACQUISITION

HORIZ. 50 0 50 100

(SCALE IN FEET)

ISSUE	DATE	DESCRIPTION	BY	CHKD.	APP.

COMMONWEALTH OF MASSACHUSETTS JONATHAN P. BRUNEAU CIVIL No. 46035 REGISTERED PROFESSIONAL ENGINEER 5-21-12

MASSACHUSETTS BAY TRANSPORTATION AUTHORITY

FITCHBURG COMMUTER RAIL LINE IMPROVEMENT PROJECT CONTRACT NO. G67CN01

SOUTH ACTON STATION RIGHT OF WAY AND PROPERTY PLAN

HNTB 300 APOLLO DRIVE CHELMSFORD, MA 01824 (978) 905-4000

PROJECT MANAGER 5/30/12 Date

MASSACHUSETTS BAY TRANSPORTATION AUTHORITY

APPROVED BY: PROJECT MANAGER 6/30/12 Date

JACOBS 343 CONGRESS STREET BOSTON, MA 02110 (617) 242-9222

HORIZ: AS SHOWN
VERT: NONE
DATE: 5/17/12

DES. BY	DR. BY	CHK. BY
JPB	KMB	JM

PLAN NO. 168513

SHEET C-3

ISSUE

FILE NAME: P:\MBTA\2008\E2X3780\CAD\700CADD\702STATIONS\South Acton\Civil\PS&E\ C-3 ROW and Property Plan.dwg
PLOT DATE: May 21, 2012 – 7:28am

MBTA PROPERTY ABUTTERS OWNERSHIP INFORMATION

Map	Parcel #	Lot	#	Street Name	Owner's Name	Co Grantee's Name	Mailing Address	City	State	Zip	Book/Page	Sale Date
H2	2		14	MARTIN ST	COOPER KRISTIN		14 MARTIN ST	ACTON	MA	01720	37633/ 143	1/10/2003
H2	5		77	MAPLE ST	SCANLON JOSEPH G	SCANLON KRYSKO REBECCA	77 MAPLE ST	ACTON	MA	01720	43178/ 453	6/30/2004
H2	6		75	MAPLE ST	SENNER JOHN	SENNER FAY B	75 MAPLE STREET	ACTON	MA	01720	20889/0245	11/29/1990
H2	7		14	MARTIN ST	COOPER KRISTIN		14 MARTIN ST	ACTON	MA	01720	37633/ 143	1/10/2003
H2	8		12	MARTIN ST	TOWN OF ACTON		472 MAIN STREET	ACTON	MA	01720	TL98957	2/12/2002
H2	9		4	CENTRAL ST	TOWN OF ACTON	PARKING LOT	472 MAIN STREET	ACTON	MA	01720	12943/0038	3/5/1976
H2	13		71	MAPLE ST	MILEY MARGARET	SHANLEY HARRY T	71 MAPLE ST	ACTON	MA	01720	28642/0462	5/29/1998
H2	17		65	MAPLE ST	BUCKINGHAM FORRY	BUCKINGHAM BETH E	65 MAPLE ST	ACTON	MA	01720	30960/0520	12/15/1999
H2	18		61	MAPLE ST	CHEN JENNIFER CRACKNELL		61 MAPLE ST	ACTON	MA	01720	28630/0123	5/28/1998
H2	19		19	RAILROAD ST #A1	GURTLER MICHAEL TRUSTEE		19 RAILROAD ST #A1	ACTON	MA	01720	331/19182	7/7/1998
H2	19		19	RAILROAD ST #A2	HOLT JASON M		19 RAILROAD ST #A2	ACTON	MA	01720	331/19182	7/7/1998
H2	19		19	RAILROAD ST #A3	MCMULLON LINDA D		19 RAILROAD ST #A3	ACTON	MA	01720	331/19182	7/7/1998
H2	19		19	RAILROAD ST #B1	GURTLER MICHAEL TRUSTEE		19 RAILROAD ST #B1	ACTON	MA	01720	331/19182	7/7/1998
H2	19		19	RAILROAD ST #B2	GURTLER MICHAEL TRUSTEE	RAILROAD REALTY TRUST	65 SILVER HILL ROAD	SUDBURY	MA	01776	331/19182	7/7/1998
H2	19		19	RAILROAD ST #B3	BOTTNER RICHARD		19 RAILROAD ST #B3	ACTON	MA	01720	331/19182	7/7/1998
H2	19		19	RAILROAD ST #C1	BELL KERSTIN E		PO BOX 701	S YARMOUTH	MA	02664	321/50264	10/23/2007
H2	19		19	RAILROAD ST #C2	GURTLER MICHAEL TRUSTEE	RAILROAD REALTY TRUST	65 SILVER HILL ROAD	SUDBURY	MA	01720	331/19182	7/7/1998
H2	19		19	RAILROAD ST #C3	TSUJI YUKIE L		19 RAILROAD ST #C3	ACTON	MA	01720	490/50402	11/28/2007
H2	19		19	RAILROAD ST #D1	ROBINS ELIZABETH A		19 RAILROAD ST #D1	ACTON	MA	01720	226/49036	2/25/2007
H2	19		19	RAILROAD ST #D2	JOHNSON LINDA M		19 RAILROAD ST #D2	ACTON	MA	01720	331/19182	7/7/1998
H2	19		19	RAILROAD ST #E1	GURTLER MICHAEL TRUSTEE	RAILROAD REALTY TRUST	65 SILVER HILL RD	SUDBURY	MA	01720	331/19182	7/7/1998
H2	19		19	RAILROAD ST #E2	GURTLER MICHAEL TRUSTEE		19 RAILROAD ST #E2	ACTON	MA	01720	331/19182	7/7/1998
H2	19		19	RAILROAD ST #E3	ZHANG MENG	WANG MIAOMIAO	19 RAILROAD ST #E3	ACTON	MA	01720	331/19182	7/7/1998
H2	19		19	RAILROAD ST #E4	LAMANQUE MICHELLE M		19 RAILROAD ST #E4	ACTON	MA	01720	564/48786	1/3/2007
H2	20		13	RAILROAD ST	RAILROAD STREET DEV LLC		PO BOX 985	ACTON	MA	01720	34320/ 423	12/14/2001
H2	25		57	MAPLE ST	TERAN GREGORY P	TAYLOR-TERAN LAURA K	57 MAPLE ST	ACTON	MA	01720	40690/ 551	8/29/2003
H2	26		55	MAPLE ST	ECKHARDT MARGARETHA M		55 MAPLE ST	ACTON	MA	01720	40171/ 214	7/28/2003
H2	27		49	MAPLE ST	GREGORY JILL S		49 MAPLE ST	ACTON	MA	01720	25853/0377	11/29/1995
H2	28		45	MAPLE ST	GLENN HENRY J	DIANA F	45 MAPLE ST	ACTON	MA	01720	13432/0201	5/2/1978
H2	35		43	MAPLE ST	MINKIN MAYA MARCELLA	MAXWELL GREGORY	43 MAPLE ST	ACTON	MA	01720	38332/ 060	3/14/2003
H2	36		41	MAPLE ST	HAYWARD ERNESTINE		41 MAPLE STREET	ACTON	MA	01720	06931/0469	1/22/1946
H2	37		21	MAPLE ST	RICHARDS GORDON D		60 CHARTER ROAD	ACTON	MA	01720	11658/0673	3/31/1969
H2	38		9	RAILROAD ST	RAILROAD STREET DEVELOPMENT, LLC		PO BOX 985	ACTON	MA	01720	34320/ 422	12/14/2001
H2	39		128	MAIN ST	IRON WORK FARM IN ACTON INC	C/O ANNE FORBES	PO BOX 1111	W ACTON	MA	01720	10725/0285	12/31/1964
H2	42		19	MAPLE ST	RICHARDS GORDON D		60 CHARTER ROAD	ACTON	MA	01720	37337/ 382	
H2	42	1	1	MAPLE ST	MONTOURI REALTY CO		5419 VISTA LEJANA NE	ALBUQUERQUE	NM	87111	37337/ 382	12/11/2002
H2	42	2	1	MAPLE STREET	COMMONWEALTH OF MASSACHUSETTS		DEPARTMENT OF HIGHWAYS	BOSTON	MA	02108	26620/ 363	8/29/1996
H2	43		124	MAIN ST	CHEN FRANK	ZHANG XIAO FAN	124 MAIN ST	ACTON	MA	01720	43559/ 297	8/20/2004
H2	43	1	6	RAILROAD ST	ACTON TOWN OF		472 MAIN ST	ACTON	MA	01720	31318/0060	3/28/2000
H2	47		3	SCHOOL ST	TOWN OF ACTON	TREE DEPARTMENT	472 MAIN STREET	ACTON	MA	01720	03247/0263	8/25/1906
H2	48		9	SCHOOL ST	PORRAZZO DANIEL		43 KINSLEY ROAD	ACTON	MA	01720	28252/0596	3/3/1998
H2	49		13	SCHOOL ST	TOWN OF ACTON		472 MAIN STREET	ACTON	MA	01720	20893/ END	11/30/1990
H2	57		113	MAIN ST	ERIKSON GRAIN MILL		PO BOX 2263	ACTON	MA	01720	12958/0265	4/9/1976
H2	78		3	RAILROAD ST	KINGSWOOD CORP		PO BOX 1327	LITTLETON	MA	01460	45122/ 135	5/4/2005
H2	78	1	7	RAILROAD ST	NUTTING THOMAS E		130 MAIN ST	ACTON	MA	01720	15544/ 55	4/30/1984
H2	79		16	MARTIN ST	SWEENEY JOHN P	SWEENEY ANN-MARIE MANNA	16 MARTIN STREET	ACTON	MA	01720	25240/0592	3/24/1995
H2	81		120	MAIN ST	TOWN OF ACTON		472 MAIN STREET	ACTON	MA	01720	03247/0263	8/24/1906
H2	56		10	MAPLE ST	KOZEL PETER D	YOUNG KIMBERLY A	10 MAPLE ST	ACTON	MA	01720	44668/352	3/29/2005
H2	55		14	MAPLE ST	MIGUELEZ AVELINO		14 MAPLE ST	ACTON	MA	01720	50916/449	3/21/2008
H2	54		16	MAPLE ST	HANLEY SEAN P	HANLEY CHRISTINE L	16 MAPLE ST	ACTON	MA	01720	36150/609	8/16/2002
H2	53		18	MAPLE ST	MANNING STEVEN T		18 MAPLE ST	ACTON	MA	01720	32111/0208	12/7/2000
H2	62		2	STOW ST	CAOUETTE FRANCES + MARY ANN TRUSTEE SIMONE JOHN E TRUSTEE	THE SIMON IRRECOVABLE TRUST	90 MARTIN ST	ACTON	MA	01720	31063/229	1/19/2000

NOTES:

1. PROPERTY OWNERSHIP INFORMATION: THE MBTA ABUTTER INFORMATION CONTAINED IN THE TABLE AT LEFT WAS PROVIDED BY THE TOWN OF ACTON ASSESSOR'S OFFICE BETWEEN 2008 AND 2010.

COMMONWEALTH OF MASSACHUSETTS
JONATHAN P. BRUNEAU
CIVIL
No. 46835
REGISTERED PROFESSIONAL ENGINEER
5-21-12

MASSACHUSETTS BAY TRANSPORTATION AUTHORITY

FITCHBURG COMMUTER RAIL LINE
IMPROVEMENT PROJECT
CONTRACT NO. G67CN01

SOUTH ACTON STATION
RIGHT OF WAY
AND PROPERTY OWNERSHIP DATA

ISSUE	DATE	DESCRIPTION	BY	CHKD.	APP.

HNTB
300 APOLLO DRIVE
CHELMSFORD, MA 01824
(978) 905-4000

PROJECT MANAGER — Date 5/30/12

MASSACHUSETTS BAY TRANSPORTATION AUTHORITY
APPROVED BY:
PROJECT MANAGER — Date 6/30/12

JACOBS
343 CONGRESS STREET
BOSTON, MA 02110
(617) 242-9222

HORIZ: AS SHOWN	DES. BY	DR. BY	CHK. BY	PLAN NO. 168514	ISSUE
VERT: NONE	JPB	KMB	JM		
DATE: 5/17/12				SHEET C-4	

FILE NAME: P:\MBTA\2008\E2X37800\CAD\700CADD\702STATIONS\South Acton\Civil\PS&E\ C-4 ROW and Property Plan Info.dwg
PLOT DATE: May 21, 2012 – 7:32am

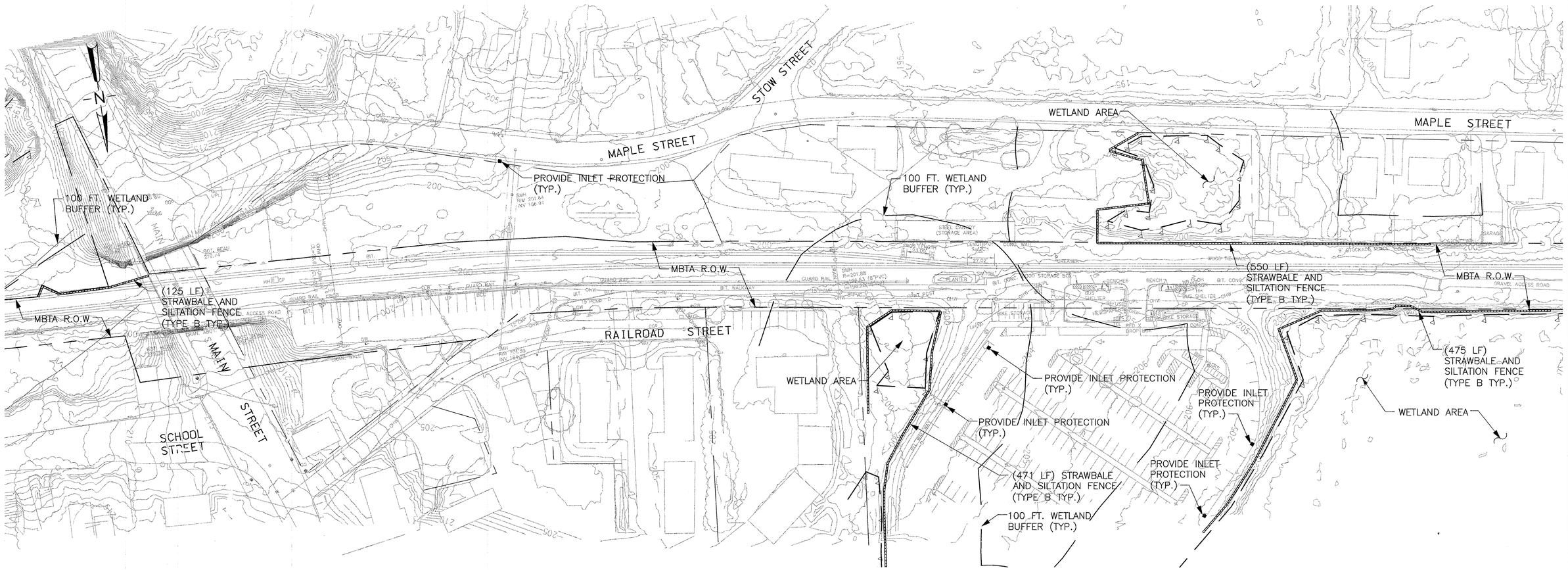

PLAN

NOTES:

1. EROSION CONTROL MEASURES SHALL BE INSPECTED AND MAINTAINED IN ACCORDANCE WITH THE STORM WATER POLLUTION PREVENTION PLAN (SWPPP). SEE CONTRACT SPECIFICATIONS FOR DETAILS.
2. OTHER EROSION CONTROL MEASURES MAY BE NECESSARY OTHER THAN THOSE EXPLICITYLY SHOWN ON THIS DRAWING.
3. SEE APPENDIX FOR ACTON CONSERVATION COMMISSION ORDER OF CONDITIONS.

HORIZ. 50 0 50 100

(SCALE IN FEET)

COMMONWEALTH OF MASSACHUSETTS JONATHAN P. BRUNEAU CIVIL No. 46035 REGISTERED PROFESSIONAL ENGINEER 5-21-12

ISSUE	DATE	DESCRIPTION	BY	CHKD.	APP.

JACOBS 343 CONGRESS STREET BOSTON, MA 02110 (617) 242-9222

HNTB 300 APOLLO DRIVE CHELMSFORD, MA 01824 (978) 905-4000

PROJECT MANAGER Date 5/20/12

MASSACHUSETTS BAY TRANSPORTATION AUTHORITY

APPROVED BY: PROJECT MANAGER Date 6/30/12

MASSACHUSETTS BAY TRANSPORTATION AUTHORITY

FITCHBURG COMMUTER RAIL LINE IMPROVEMENT PROJECT CONTRACT NO. G67CN01

SOUTH ACTON STATION EROSION CONTROL PLAN

HORIZ: AS SHOWN	DES. BY	DR. BY	CHK. BY	PLAN NO. 168515	ISSUE
VERT: NONE	MDeC	KMB	LHC		
DATE: 5/17/12				SHEET C-5	

FILE NAME: P:\MBTA\2008\E2X3780\CAD\700CADD\702STATIONS\South Acton\Civil\PS&E\ C-5 Erosion Control Plan.dwg
PLOT DATE: May 21, 2012 – 7:37am

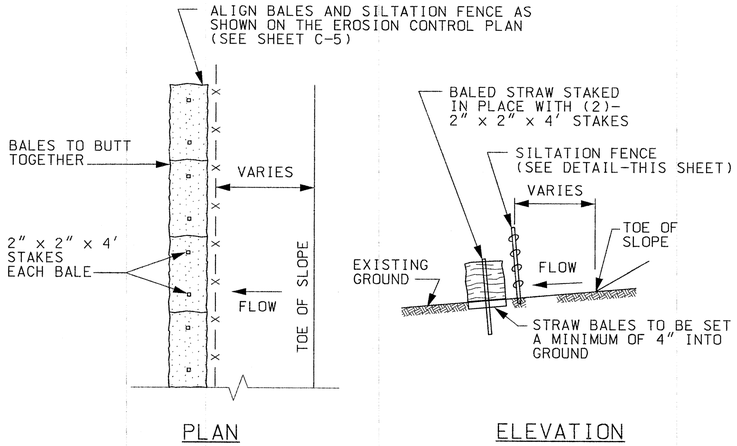

NOTE:

1. TO BE USED WHERE THE EXISTING GROUND SLOPES AWAY FROM THE EMBANKMENT

BALED STRAW EROSION CHECKS TYPE "B"

N.T.S.

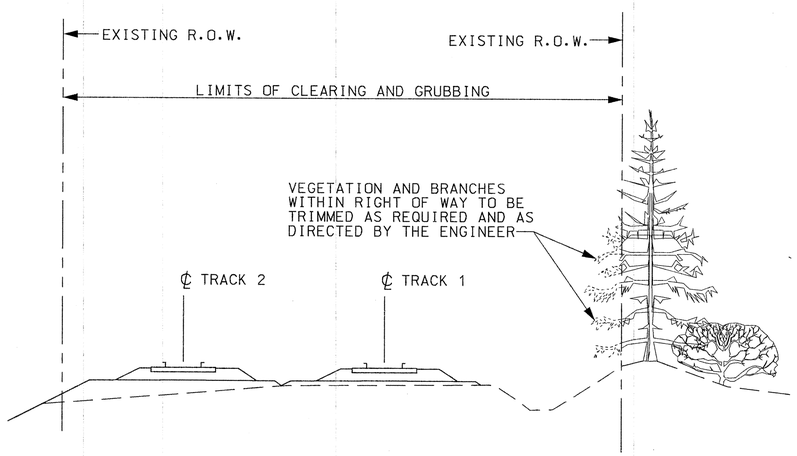

VEGETATION CLEARANCE LIMITS

N.T.S.

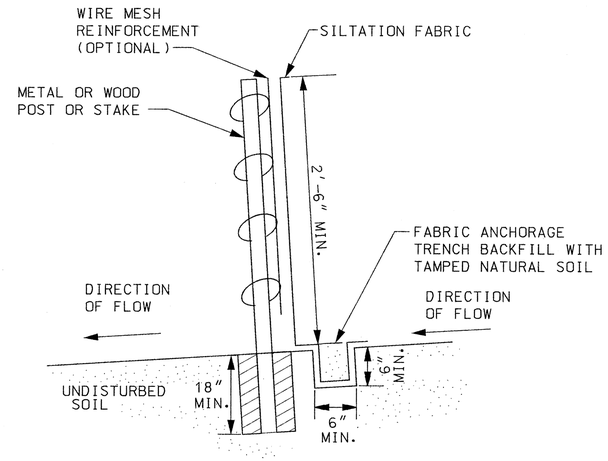

NOTES:

1. ATTACH FABRIC TO WIRE MESH WITH HOG RINGS, STEEL POSTS WITH TIE WIRES, OR WOOD POSTS WITH STAPLES.
2. SPLICES SHALL BE MADE AT FENCE POSTS. FABRIC SHALL BE OVERLAPPED 6" AND SECURELY FASTENED.
3. POST SPACING SHALL BE A MAXIMUM OF 4' O.C. WITHOUT SUPPORTING WIRE MESH, OR 10' O.C. WITH WIRE MESH.
4. POSTS SHALL BE 4" DIAMETER WOOD OR STEEL WEIGHING NOT LESS THAN 1.3 LB/LIN. FT.

SILTATION FENCE DETAIL

N.T.S.

NOTES:

1. EROSION CONTROL MEASURES SHALL BE INSPECTED AND MAINTAINED IN ACCORDANCE WITH THE STORM WATER POLLUTION PREVENTION PLAN (SWPPP). SEE CONTRACT SPECIFICATIONS FOR DETAILS.
2. STRAW WATTLES MAY BE SUBSTITUTED FOR STRAW BALES AS APPROVED BY THE LOCAL CONSERVATION COMMISSION AND THE ENGINEER.
3. SEE APPENDIX FOR ACTON CONSERVATION COMMISSION ORDER OF CONDITIONS.

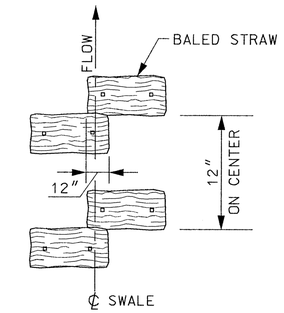

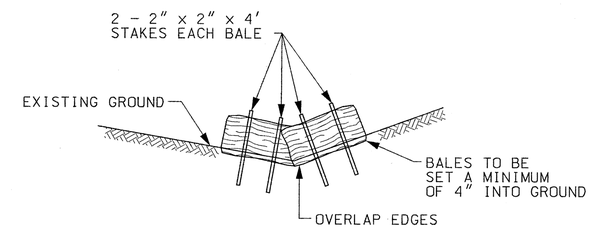

NOTES:

1. TO BE USED WHERE THE EXISTING GROUND SLOPES TOWARD THE EMBANKMENT.
2. ALL SILTATION BARRIERS SHALL BE BALED STRAW, UNLESS OTHERWISE SHOWN ON THE PLANS.

BALED STRAW EROSION CHECKS TYPE "A"

N.T.S.

COMMONWEALTH OF MASSACHUSETTS
JONATHAN P. BRUNEAU
CIVIL
No. 46035
REGISTERED PROFESSIONAL ENGINEER
5-21-12

ISSUE	DATE	DESCRIPTION	BY	CHKD.	APP.

JACOBS
343 CONGRESS STREET
BOSTON, MA 02110
(617) 242-9222

MASSACHUSETTS BAY TRANSPORTATION AUTHORITY

FITCHBURG COMMUTER RAIL LINE
IMPROVEMENT PROJECT
CONTRACT NO. G67CN01

SOUTH ACTON STATION
EROSION CONTROL DETAILS

HNTB
300 APOLLO DRIVE
CHELMSFORD, MA 01824
(978) 905-4000

PROJECT MANAGER — Date 5/30/12

MASSACHUSETTS BAY TRANSPORTATION AUTHORITY
APPROVED BY:
PROJECT MANAGER — Date 6/30/12

HORIZ: AS SHOWN	DES. BY	DR. BY	CHK. BY	PLAN NO. 168516	ISSUE
VERT: NONE	MDeC	CWB	JM		
DATE: 5/17/12				SHEET C-6	

FILE NAME: P:\MBTA\2008\E2X37800\CAD\700CADD\702STATIONS\South Acton\Civil\PS&E\ C-6 Erosion Control Details.dwg
PLOT DATE: May 21, 2012 – 7:39am

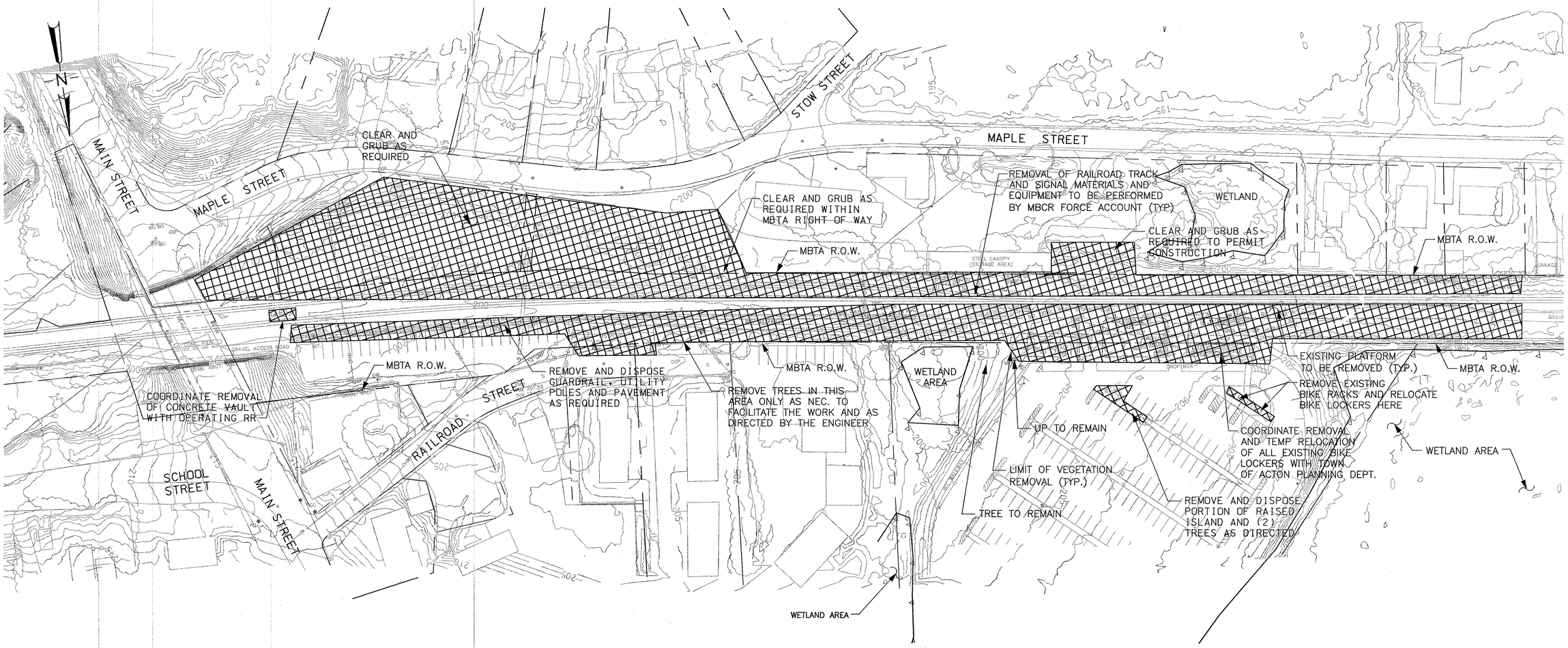

PLAN

NOTES:

1. ALL DEMOLITION MATERIAL SHALL BE DISPOSED OF IN ACCORDANCE WITH THE PROJECT SPECIFICATIONS.
2. SALVAGEABLE MATERIAL NOT OWNED BY THE MBTA SHALL BE MADE AVAILABLE TO TOWN OF ACTON AUTHORITIES FOR HANDLING.
3. ALL DEMOLITION AND REMOVALS AT ABUTTING PROPERTY LINES SHALL BE REVIEWED WITH AND APPROVED BY THE ENGINEER.

LEGEND:

PROPOSED DEMOLITION

HORIZ. 50 0 50 100

(SCALE IN FEET)

COMMONWEALTH OF MASSACHUSETTS
JONATHAN P. BRUNEAU
CIVIL
No. 46035
REGISTERED PROFESSIONAL ENGINEER
5-21-12

MASSACHUSETTS BAY TRANSPORTATION AUTHORITY

FITCHBURG COMMUTER RAIL LINE
IMPROVEMENT PROJECT
CONTRACT NO. G67CN01

SOUTH ACTON STATION
DEMOLITION PLAN

ISSUE	DATE	DESCRIPTION	BY	CHKD.	APP.

HNTB
300 APOLLO DRIVE
CHELMSFORD, MA 01824
(978) 905-4000

PROJECT MANAGER — Date

MASSACHUSETTS BAY TRANSPORTATION AUTHORITY
APPROVED BY:
PROJECT MANAGER — Date 6/30/12

JACOBS
343 CONGRESS STREET
BOSTON, MA 02110
(617) 242-9222

HORIZ: AS SHOWN	DES. BY	DR. BY	CHK. BY	PLAN NO. 168517	ISSUE
VERT: NONE	JPB	KMB	JGA		
DATE: 5/17/12				SHEET C-7	

FILE NAME: P:\MBTA\2008\E2X3780\CAD\700CADD\702STATIONS\South Acton\Civil\PS&E\ C-7 Demolition Plan.dwg
PLOT DATE: May 21, 2012 – 7:46am

EAST TO BOSTON

WEST TO FITCHBURG

TOWN OF ACTON

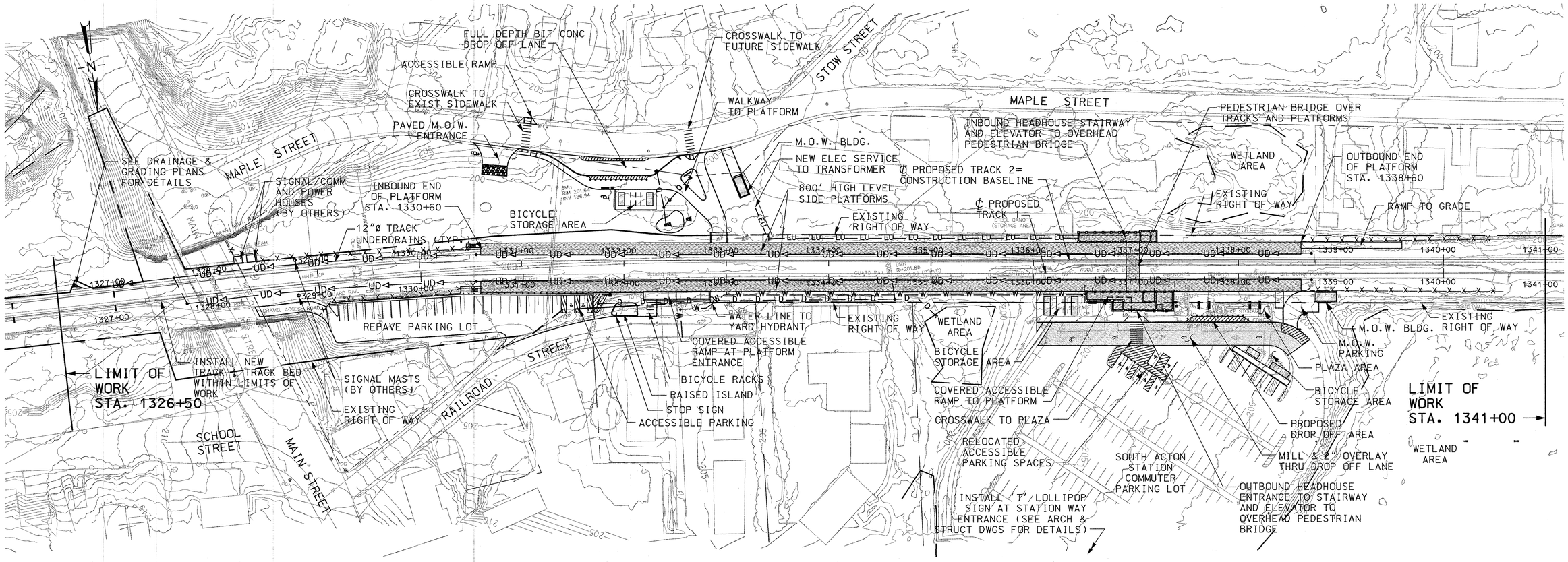

PLAN

NOTES:

1. FOR GENERAL NOTES SEE SHEET G-3.
2. FOR ARCHITECTURAL DRAWINGS SEE 'A' SHEETS.
3. FOR STRUCTURAL DRAWINGS SEE 'S' SHEETS.
4. FOR ELECTRICAL DRAWINGS SEE 'E' SHEETS.

LEGEND:

PLATFORM, STAIRS AND ELEVATORS

HORIZ. 50 0 50 100

(SCALE IN FEET)

COMMONWEALTH OF MASSACHUSETTS JONATHAN P. BRUNEAU CIVIL No. 46035 REGISTERED PROFESSIONAL ENGINEER 5.21.12

ISSUE	DATE	DESCRIPTION	BY	CHKD.	APP.

JACOBS 343 CONGRESS STREET BOSTON, MA 02110 (617) 242-9222

MASSACHUSETTS BAY TRANSPORTATION AUTHORITY

FITCHBURG COMMUTER RAIL LINE IMPROVEMENT PROJECT CONTRACT NO. G67CN01

SOUTH ACTON STATION OVERALL SITE PLAN

HNTB 300 APOLLO DRIVE CHELMSFORD, MA 01824 (978) 905-4000

PROJECT MANAGER 5/30/12 Date

MASSACHUSETTS BAY TRANSPORTATION AUTHORITY

APPROVED BY: PROJECT MANAGER 6/30/12 Date

HORIZ: AS SHOWN	DES. BY	DR. BY	CHK. BY	PLAN NO. 168518	ISSUE
VERT: NONE	JPB	KMB	JM		
DATE: 5/17/12				SHEET C-8	

FILE NAME: P:\MBTA\2008\E2X37800\CAD\700CADD\702STATIONS\South Acton\Civil\PS&E\ C-8 Overall Site Plan.dwg
PLOT DATE: May 22, 2012 - 7:35am

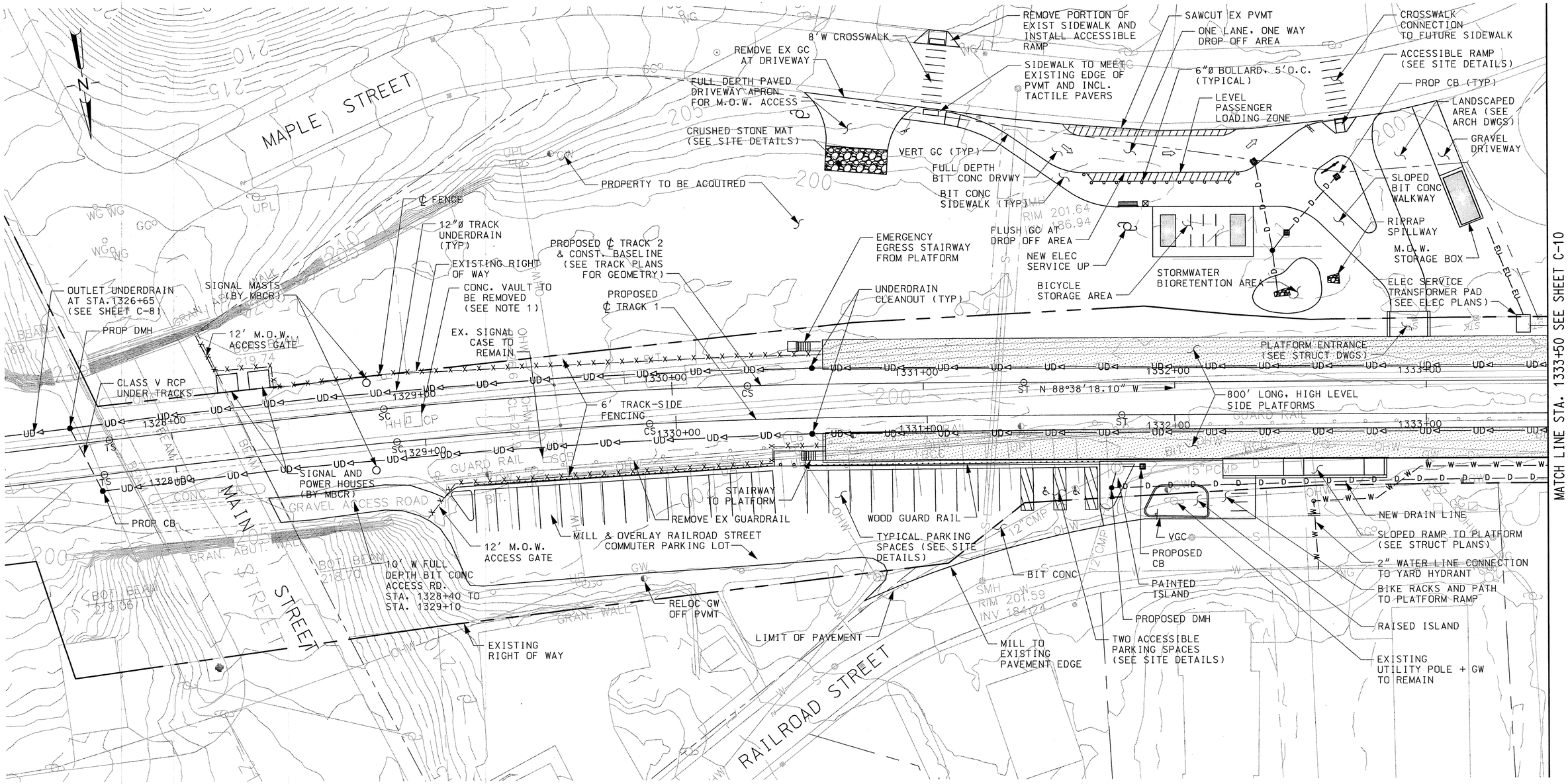

PLAN

NOTES:

1. CONTRACTOR SHALL COORDINATE WITH MBCR TO REMOVE AND DISPOSE OF CONCRETE VAULT. PRIOR TO REMOVAL AND DISPOSAL ENSURE THERE ARE NO OPERATING UTILIIES BURIED BENEATH THE SAND AND DIRT WITHIN THE VAULT. IF ACTIVE UTILITIES ARE FOUND ARRANGE FOR APPROPRIATE RELOCATION AS REQUIRED.
2. FOR TRACK 2 CONSTRUCTION BASELINE DATA SEE 'T' PLANS.
3. SEE SHEETS C-11 & C-12 FOR DRAINAGE AND GRADING PLANS.

LEGEND:

PLATFORMS

20 0 20 40
SCALE IN FEET

COMMONWEALTH OF MASSACHUSETTS JONATHAN P. BRUNEAU CIVIL No. 46035 REGISTERED PROFESSIONAL ENGINEER 5-21-12

ISSUE	DATE	DESCRIPTION	BY	CHKD.	APP.

JACOBS 343 CONGRESS STREET BOSTON, MA 02110 (617) 242-9222

MASSACHUSETTS BAY TRANSPORTATION AUTHORITY

FITCHBURG COMMUTER RAIL LINE IMPROVEMENT PROJECT CONTRACT NO. G67CN01

SOUTH ACTON STATION
SITE PLAN – EAST END
SHEET 1 OF 2

HNTB 300 APOLLO DRIVE CHELMSFORD, MA 01824 (978) 905-4000

PROJECT MANAGER 5/30/12 Date

MASSACHUSETTS BAY TRANSPORTATION AUTHORITY
APPROVED BY PROJECT MANAGER 6/30/12 Date

HORIZ: AS SHOWN	DES. BY	DR. BY	CHK. BY	PLAN NO. 168519	ISSUE
VERT: NONE	JPB	KMB	JM		
DATE: 5/17/12				SHEET C-9	

FILE NAME: P:\MBTA\2008\E2X3780\CAD\700CADD\702STATIONS\South Acton\Civil\PS&E\ C-9 & C-10 Site Plans.dwg
PLOT DATE: May 21, 2012 – 8:29am

EAST TO BOSTON

WEST TO FITCHBURG

TOWN OF ACTON

MATCH LINE STA. 1333+50 SEE SHEET C-9

N

ELEC SERVICE TO HEADHOUSE (SEE ELEC PLANS)

PROPOSED ℄ TRACK 2 & CONST. BASELINE (SEE NOTE 2)

INBOUND HEADHOUSE (SEE ARCH AND STRUCT DWGS)

REMOVE 24' CONC. WALL & FTG. STA. 1336+39 TO 1336+62.5, 26' LT.

WETLAND AREA

PLATFORM GATE TO EGRESS RAMP

BEGIN UNDERDRAIN W/ CLEANOUT (TYP)

RAMP TO GRADE (SEE STRUCTURAL DWGS.)

UNDERDRAIN CLEANOUT (TYP)

PROPOSED ℄ TRACK 1

STEEL CANOPY (STORAGE AREA)

EXISTING RIGHT OF WAY

PEDESTRIAN BRIDGE OVER TRACKS

EXISTING RIGHT OF WAY

1334+00 1335+00 1336+00 1337+00 1338+00 1339+00

REMOVE EXISTING DMH (SEE DRAINAGE AND GRADING PLANS)

N 88°38'18.10" W

800' LONG, HIGH LEVEL SIDE PLATFORMS

8"Ø DOWNSPOUT DRAIN OUTLET UNDER PLATFORM

EXTEND TRACKSIDE FENCING TO STA.1340+60

WOOD STORAGE BOX

BIT. CONC. PLATFORM

EXISTING RIGHT OF WAY

PROPOSED DMH

WATER LINE TO YARD HYDRANT

RECONFIGURED BICYCLE STORAGE AREA

M.O.W. STORAGE BOX

M.O.W. ACCESS GATE

EXISTING RIGHT OF WAY

12"Ø DRAIN TO DMH

WETLAND AREA

LIMIT OF 2" BIT CONC OVERLAY

DROP BOX

FULL DEPTH BIT CONC DRIVEWAY

WETLAND AREA

8"Ø DRAIN TO DMH

NEW PLAZA W/VERT GC TO MEET EXISTING CURB LINE

RAMP TO PLATFORM (SEE STRUCT DWGS)

INLET (SEE SITE DETAILS)

8"Ø DOWNSPOUT DRAIN

VERT GC (TYP)

REMOVE RAISED ISLAND, MAKE FLUSH W/ LOT

FOR SW GRID LAYOUT SEE DETAIL SHEET C-15

OUTBOUND HEADHOUSE (SEE ARCH. & STRUCT DRAWINGS)

LIMIT OF 2" BIT CONC OVERLAY

ACCESSIBLE RAMP (SEE SITE DETAILS)

CONSTRUCT 60'L PASSENGER LOADING ZONE W/ FLUSH GRAN. CURB AND 6"Ø BOLLARDS @ 5' O.C. (TYP) (SEE SITE DETAILS)

(6) RELOCATED BICYCLE LOCKERS

CONVERT TO SEVEN (7) ACCESSIBLE PARKING SPACES

(4) RELOCATED BICYCLE LOCKERS

LEVEL ACCESSIBLE PATH TO CROSSWALK

RESTRIPE AS EIGHT (8) REGULAR PARKING SPACES

ACTON COMMUTER PARKING AREA TO REMAIN IN OPERATION (SEE STAGING PLANS)

PLAN

NOTES:

1. FOR HEADHOUSE PLANS AND DETAILS SEE ARCHITECTURAL AND STRUCTURAL DRAWINGS.
2. FOR TRACK 2 CONSTRUCTION BASELINE DATA SEE 'T' PLANS.
3. SEE SHEETS C-11 & C-12 FOR DRAINAGE AND GRADING PLANS.

LEGEND:

PLATFORMS

20 0 20 40

SCALE IN FEET

COMMONWEALTH OF MASSACHUSETTS JONATHAN P. BRUNEAU CIVIL No. 46035 REGISTERED PROFESSIONAL ENGINEER 6-21-12

MASSACHUSETTS BAY TRANSPORTATION AUTHORITY

FITCHBURG COMMUTER RAIL LINE IMPROVEMENT PROJECT CONTRACT NO. G67CN01

SOUTH ACTON STATION SITE PLAN – WEST END SHEET 2 OF 2

ISSUE	DATE	DESCRIPTION	BY	CHKD.	APP.

HNTB 300 APOLLO DRIVE CHELMSFORD, MA 01824 (978) 905-4000

PROJECT MANAGER 5/30/12 Date

MASSACHUSETTS BAY TRANSPORTATION AUTHORITY

APPROVED BY: PROJECT MANAGER 6/30/12 Date

JACOBS 343 CONGRESS STREET BOSTON, MA 02110 (617) 242-9222

HORIZ: AS SHOWN	DES. BY	DR. BY	CHK. BY	PLAN NO. 168520	ISSUE
VERT: NONE	JPB	KMB	JM		
DATE: 5/17/12				SHEET C-10	

FILE NAME: P:\MBTA\2008\E2X37800\CAD\700CADD\702STATIONS\South Acton\Civil\PS&E\ C-9 & C-10 Site Plans.dwg
PLOT DATE: May 21, 2012 – 8:56am

EAST TO BOSTON

WEST TO FITCHBURG

TOWN OF ACTON

MAPLE STREET

MAIN STREET

RAILROAD STREET

MATCH LINE STA. 1327+55 SEE BELOW

MATCH LINE STA. 1333+75 SEE SHEET C-12

MATCH LINE STA. 1327+55 SEE ABOVE

SLOPE SIDEWALK DOWN TO CROSSWALK

BIT CONC BERM @ DRIVEWAY EDGE

CLEAN EXISTING CB AND 50 FT. OF DOWNSTREAM PIPE

BIT CONC APRON TO MEET EXISTING

PROP BIT CONC TO MEET EXISTING EDGE OF PVMT

VERT GC

32'-12"Ø DRAIN PIPE

PROP CB, STA. 1332+44 59'LT RIM EL=200.5, INV OUT=198.25

PROP CB STA. 1332+31, 87'LT RIM EL=200.5 INV OUT=198.5

PROP CB STA. 1332+64, 81'RT. RIM EL=200.75 INV OUT=198.5

LANDSCAPED AREA

PROP DMH, STA 1332+39, 53' LEFT RIM EL=201.5 INV IN=198.25 (12") INV IN=198.00 (12") INV IN=198.00 (12") INV OUT=197.75

20'-12"Ø PIPE

SMH RIM 201.64 INV 186.94

6" CONC PAD

16'-12"Ø PIPE

DRAIN OUTLET EL=197.5

RIPRAP REINF SPILLWAY

3:1 SIDE SLOPES, LOAM & SEED

BIT CONC WALKWAY

ELEC TRANSFORMER

PROPOSED ℄ TRACK 2 & CONST. BASELINE (SEE TRACK PLANS FOR GEOMETRY)

PROP DMH STA 1327+60, 6.5' LT RIM EL=198.0 INV IN=195.23 (RCP) INV IN=195.00 (UD) INV OUT=194.96 (UD)

GRADE AND COMPACT SURPLUS EXCAVATED SOIL (SEE CROSS SECTIONS)

PROPOSED ℄ TRACK 1

PROP 6' CLF, 12' OFF ℄ TRACK

UNDERDRAIN CLEANOUT STA 1330+50, (TYP)

EXIST RIGHT OF WAY

N 88° 38'18.10" W

800' LONG, HIGH LEVEL SIDE PLATFORMS

24'-12" CL V RCP

GRAVEL ACCESS ROAD

CONC PIER

GUARD RAIL

LIMIT OF OVERLAY

6'-12"Ø DRAIN PIPE

CONC PAD W/ (3) 6"Ø BOLLARDS (SEE STRUCT PLANS)

MILL & PAVE W/ 2" OVERLAY

LOCKED M.O.W. ACCESS GATE

PROP DMH STA 1331+72, 33' RT. RIM EL=201.0 12" INV IN EL=198.0 12" INV OUT EL=197.8

CONNECT 2" WATER LINE TO MAIN, RUN TO YARD HYDRANT INCLUDE SHUT OFF & METER

EXIST RIGHT OF WAY

PROP VERT GC ISLAND

PROP CB STA. 1331+88, 33'RT. RIM EL=200.9 INV OUT EL=198.5

290'-12"Ø DRAIN PIPE

6'-12"Ø DRAIN PIPE

FULL DEPTH BIT CONC PAVEMENT

PROP CB W/BEEHIVE GRATE STA 1327+70, 19.7' RT RIM EL=198.25 INV IN=195.3 INV OUT=198.25

EXISTING RIGHT OF WAY

OVERLAY TO MEET EXIST PAVEMENT

7 RAILROAD STREET

9 RAILROAD STREET

11 RAILROAD STREET

PROP FLARED END SECTION OUTLET W/RIPRAP STA 1326+65, 11' RT INV EL=194.43

22.5° BEND STA 1326+72, 6.5' RT

LIMIT OF WORK STA. 1326+50

PLAN

NOTES:

1. FOR HEADHOUSE PLANS AND DETAILS SEE ARCHITECTURAL AND STRUCTURAL DRAWINGS.
2. FOR TRACK 2 CONSTRUCTION BASELINE DATA SEE 'T' DRAWINGS.

LEGEND:

- PROPOSED PROPERTY LINE
- RAILROAD R.O.W.
- WETLAND EDGE
- UD 12"Ø UNDER DRAIN (SUBDRAIN)
- 250 PROPOSED CONTOUR

20 0 20 40

SCALE IN FEET

COMMONWEALTH OF MASSACHUSETTS JONATHAN P. BRUNEAU CIVIL No. 43135 REGISTERED PROFESSIONAL ENGINEER 5-21-12

MASSACHUSETTS BAY TRANSPORTATION AUTHORITY

FITCHBURG COMMUTER RAIL LINE IMPROVEMENT PROJECT CONTRACT NO. G67CN01

SOUTH ACTON STATION DRAINAGE AND GRADING PLAN–EAST END SHEET 1 OF 2

ISSUE	DATE	DESCRIPTION	BY	CHKD.	APP.

HNTB 300 APOLLO DRIVE CHELMSFORD, MA 01824 (978) 905-4000

PROJECT MANAGER 5/30/12 Date

MASSACHUSETTS BAY TRANSPORTATION AUTHORITY

APPROVED BY: PROJECT MANAGER 6/30/12 Date

JACOBS 343 CONGRESS STREET BOSTON, MA 02110 (617) 242-9222

HORIZ: AS SHOWN	DES. BY	DR. BY	CHK. BY	PLAN NO. 168521	ISSUE
VERT: NONE	JPB	KMB	JM		
DATE: 5/17/12				SHEET C-11	

FILE NAME: P:\MBTA\2008\E2X37800\CAD\700CADD\702STATIONS\South Acton\Civil\PS&E\ C-11 & C-12 Drainage and Grading Plan.dwg

PLOT DATE: May 21, 2012 – 9:05am

EAST TO BOSTON

WEST TO FITCHBURG

TOWN OF ACTON

MAPLE STREET

MATCH LINE STA. 1333+75 SEE SHEET C-11

21 MAPLE STREET

21 MAPLE STREET

41 MAPLE STREET

43 MAPLE STREET

WETLAND AREA

STAIRWAY AND ELEVATOR TO OVERHEAD PEDESTRIAN BRIDGE

PROPOSED ℄ TRACK 2 & CONST. BASELINE (SEE TRACK PLANS FOR GEOMETRY)

AREA TO BE REGRADED AND LANDSCAPED (SEE ARCH DWGS)

PROPOSED ℄ TRACK 1

STEEL CANOPY (STORAGE AREA)

EXISTING RIGHT OF WAY

PEDESTRIAN BRIDGE OVER TRACKS

BEGIN UNDERDRAIN W/ CLEANOUT (TYP) STA 1338+70, 6.5' LT & 19.5' RT

4.8% RAMP TO GRADE (SEE STRUCTURAL DWGS)

800' LONG, HIGH LEVEL SIDE PLATFORMS (SEE STRUCTURAL DWGS)

N 88° 38'18.10" W

TRENCH DRAIN AT ENTRANCE, USE 3"Ø DRAIN TO TRACKWAY

TRENCH DRAIN AT ENTRANCE, USE 3"Ø DRAIN TO TRACKWAY

PROVIDE 18" GAPS IN VGC EVERY 23'± ALONG BACK OF PLAZA CONC. (SEE STRUCT DWGS DETAIL)

EXTEND TRACKSIDE FENCING 200 FT. FROM END OF PLATFORM WEST TOWARD MARTIN STREET END @ STA.1340+60

1334+00 1335+00 1336+00 1337+00 1338+00 1339+00

REMOVE EXIST DMH AND EXTEND EXIST 15" DRAIN LINE TO NEW DMH

290'-12"Ø DRAIN PIPE

PROP DMH, STA. 1334+65, 38'RT. RIM EL= 201.75 INV IN=196.25 (12") INV IN=196.65 (8") INV OUT=196.0 (15")

EXISTING RIGHT OF WAY

WETLAND AREA

50'-8"Ø DRAIN PIPE W/ 45° ELBOW INLET EL=197.50

PROP 2" PE WATER LINE TO YARD HYDRANT

BIT CONC PVMT BTWN EX & PROP

CONC SW LIMIT (MEET EX BIT CONC SW W/ FLUSH GC)

END VERT GC

PROP YARD HYDRANT

8"Ø DOWNSPOUT DRAIN PIPE, OUTLET UNDER PLATFORM & PROVIDE DI INLET 6" ABOVE GRADE AT DOWNSPOUT LOCATIONS

7.5% SLOPED COVERED RAMP TO PLATFORM

SLOPE PLAZA CONC 1/8"/FT. AWAY FROM BUILDING (TYP)

19 RAILROAD STREET

MAIN STATION ENTRANCE

FLUSH GC AT ACCESSIBLE RAMP

2" BIT CONC OVERLAY

VERT GC

ACTON COMMUTER PARKING AREA

8"Ø DOWNSPOUT DRAIN PIPE, OUTLET UNDER PLATFORM & PROVIDE DI INLET 6" ABOVE GRADE AT DOWNSPOUT LOCATIONS

FLUSH VERT GC AT DROP OFF (SEE SITE DETAILS)

VERT GC

REPLACE PAVERS W/ BIT CONC PAVEMENT

M.O.W. STORAGE BOX

EXISTING R.O.W.

FULL DEPTH BIT CONC DRIVEWAY TO M.O.W. BOX

RAMP TO PLATFORM (SEE STRUCTURAL DWGS)

SLOPE PLAZA CONC 1/8"/FT.

RELOCATED BICYCLE STORAGE BOXES

WETLAND AREA

PLAN

NOTES:

1. FOR HEADHOUSE PLANS AND DETAILS SEE ARCHITECTURAL AND STRUCTURAL DRAWINGS.
2. FOR TRACK 2 CONSTRUCTION BASELINE DATA SEE 'T' PLANS.

LEGEND:

- PROPOSED PROPERTY LINE
- RAILROAD R.O.W.
- WETLAND EDGE
- 12"Ø UNDER DRAIN (SUBDRAIN)
- 250 PROPOSED CONTOUR

20 0 20 40

SCALE IN FEET

COMMONWEALTH OF MASSACHUSETTS JONATHAN P. BRUNEAU CIVIL No. 46035 REGISTERED PROFESSIONAL ENGINEER 5-21-12

MASSACHUSETTS BAY TRANSPORTATION AUTHORITY

FITCHBURG COMMUTER RAIL LINE IMPROVEMENT PROJECT CONTRACT NO. G67CN01

SOUTH ACTON STATION DRAINAGE AND GRADING PLAN–WEST END SHEET 2 OF 2

ISSUE	DATE	DESCRIPTION	BY	CHKD.	APP.

HNTB 300 APOLLO DRIVE CHELMSFORD, MA 01824 (978) 905-4000

PROJECT MANAGER 5/30/12 Date

MASSACHUSETTS BAY TRANSPORTATION AUTHORITY APPROVED BY PROJECT MANAGER 6/30/12 Date

JACOBS 343 CONGRESS STREET BOSTON, MA 02110 (617) 242-9222

HORIZ: AS SHOWN	DES. BY	DR. BY	CHK. BY	PLAN NO. 168522	ISSUE
VERT: NONE	JPB	KMB	JM		
DATE: 5/17/12				SHEET C-12	

FILE NAME: P:\MBTA\2008\E2X37800\CAD\700CADD\702STATIONS\South Acton\Civil\PS&E\ C-11 & C-12 Drainage and Grading Plan.dwg
PLOT DATE: May 21, 2012 – 10:23am

EAST TO BOSTON

WEST TO FITCHBURG

TOWN OF ACTON

MAPLE STREET

8'W CROSSWALK

SIDEWALK TO MEET EXISTING EDGE OF PVMT AT CROSSWALK

REMOVE EX VGC

BIT CONC. BERM

R&R EX SIGN

SINGLE 14'-0 LANE, ONE WAY DROP OFF AREA

YELLOW STRIPED PVMT MARKING (TYP)

6"Ø BOLLARD, 5'O.C. (TYPICAL)

SAWCUT EX PVMT EDGE

LEVEL PASSENGER LOADING ZONE

CROSSWALK CONNECTION TO FUTURE SIDEWALK

ACCESSIBLE RAMP (SEE SITE DETAILS)

GRAVEL DRIVEWAY TO M.O.W. BOX

FULL DEPTH BIT. CONC. DRIVEWAY APRON FOR M.O.W. ACCESS

CRUSHED STONE MAT (SEE SITE DETAILS)

PROP CB

PROP CB

LANDSCAPED AREA

M.O.W. STORAGE BOX ON CONC. PAD

NEW UTILITY POLE (SEE ELEC PLANS)

20 X 40 CEM CONC PAD

EX SEWER MH TO REMAIN

BIT CONC WALKWAY TO PLATFORM

12" DRAIN (TYP)

PROP CB

RIP RAP SPILLWAY

NEW UTILITY POLE (SEE ELEC PLANS)

STORMWATER BIORETENTION AREA

PROP DMH

BICYCLE RACKS, BIKE LOCKERS BY TOWN

ELEC SERVICE DUCTBANK (SEE ELEC PLANS)

DUCTBANK TO HEADHOUSE (SEE ELEC PLANS)

CONC RAMP TO PLATFORM (SEE STRUCTURAL DWGS)

6x6 CONCRETE TRANSFORMER PAD

EMERGENCY EGRESS STAIRWAY (SEE ARCH DWGS)

INBOUND PLATFORM

1331+00

N 88° 38'18.10" W

1332+00

1333+00

ST

PROPOSED ℄ TRACK 2 AND CONST BASELINE (SEE TRACK DWGS)

UNDERDRAIN CLEANOUT (TYP) (SEE SITE DETAILS)

PROPOSED ℄ TRACK 1

800' LONG HIGH LEVEL PLATFORMS (SEE STRUCT DWGS)

12" UNDERDRAINS (SEE TYP SECTIONS AND SITE DETAILS)

1331+00

1332+00

ST

FULL DEPTH

PLAN

NOTES:

1. SEE SHEET G-3 FOR GENERAL NOTES.

LEGEND:

PLATFORM, STAIRS AND ELEVATORS

10 0 10 20

SCALE IN FEET

COMMONWEALTH OF MASSACHUSETTS JONATHAN P. BRUNEAU CIVIL No. 46035 REGISTERED PROFESSIONAL ENGINEER 5-21-12

ISSUE	DATE	DESCRIPTION	BY	CHKD.	APP.

JACOBS 343 CONGRESS STREET BOSTON, MA 02110 (617) 242-9222

HNTB 300 APOLLO DRIVE CHELMSFORD, MA 01824 (978) 905-4000

PROJECT MANAGER 5/20/12 Date

MASSACHUSETTS BAY TRANSPORTATION AUTHORITY

APPROVED BY: PROJECT MANAGER 6/30/12 Date

MASSACHUSETTS BAY TRANSPORTATION AUTHORITY

FITCHBURG COMMUTER RAIL LINE IMPROVEMENT PROJECT CONTRACT NO. G67CN01

SOUTH ACTON STATION SITE PLAN DETAIL MAPLE ST. DROP OFF

HORIZ: AS SHOWN	DES. BY	DR. BY	CHK. BY	PLAN NO. 168523	ISSUE
VERT: NONE	JPB	KMB	JM		
DATE: 5/17/12				SHEET C-13	

FILE NAME: P:\MBTA\2008\E2X37800\CAD\700CADD\702STATIONS\South Acton\Civil\PS&E\ C-13 ~ C-15 Detailed Site Plans.dwg
PLOT DATE: May 21, 2012 – 12:06pm

EAST TO BOSTON

WEST TO FITCHBURG

TOWN OF ACTON

N 88° 38′18.10″ W

1331+00

1332+00

1333+00

UNDERDRAIN CLEANOUT (TYP) (SEE SITE DETAILS)

PROPOSED ℄ TRACK 1

PROPOSED ℄ TRACK 2 AND CONST BASELINE (SEE TRACK DWGS)

800′ LONG HIGH LEVEL PLATFORMS (SEE STRUCT DWGS)

12″ UNDERDRAINS (SEE TYP SECTIONS AND SITE DETAILS)

FULL DEPTH BIT CONC PAVEMENT

(3) 6′ BIKE RACKS

PROP CB

RELOCATE GUY WIRE

SLOPED RAMP TO PLATFORM

RELOCATE GUY WIRE

EXIST R.O.W.

WOOD GUARD RAIL

MILL & OVERLAY RAILROAD STREET COMMUTER PARKING LOT

TWO (2) ACCESSIBLE PARKING SPACES

R&R BIT CONC WALKWAY W/ LOAM & SEED

WATER LINE TO YARD HYDRANT

NEW 12″ DRAIN LINE

PLATFORM GATE TO EMERGENCY EGRESS STAIRWAY (SEE ARCH DWGS)

LIMITS OF PAVEMENT OVERLAY

RELOCATE SIGN

EXISTING UTILITY POLE TO REMAIN

BIT CONC CURB TO MEET EXIST

RAILROAD STREET

EXISTING R.O.W.

PROP VGC ISLAND

WATER LINE CONNECTION TO METER PIT

TREE TO REMAIN

R1-1 SIGN

PVMT MARKING

SAWCUT & REMOVE BIT CONC CURBING

PROPOSED DMH

SMH
RIM 201.59
INV 184.24

15″ RCMP

12″ CMP

GUARD RAIL

RAILROAD STREET

PLAN

NOTES:

1. SEE SHEET G-3 FOR GENERAL NOTES.

LEGEND:

PLATFORM, STAIRS AND ELEVATORS

10 0 10 20

SCALE IN FEET

ISSUE	DATE	DESCRIPTION	BY	CHKD.	APP.

COMMONWEALTH OF MASSACHUSETTS
JONATHAN P. BRUNEAU
CIVIL
No. 46035
REGISTERED PROFESSIONAL ENGINEER
5-21-12

JACOBS
343 CONGRESS STREET
BOSTON, MA 02110
(617) 242-9222

HNTB
300 APOLLO DRIVE
CHELMSFORD, MA 01824
(978) 905-4000

PROJECT MANAGER — Date 5/30/12

MASSACHUSETTS BAY TRANSPORTATION AUTHORITY

APPROVED BY: PROJECT MANAGER — Date 6/30/12

MASSACHUSETTS BAY TRANSPORTATION AUTHORITY

FITCHBURG COMMUTER RAIL LINE
IMPROVEMENT PROJECT
CONTRACT NO. G67CN01

SOUTH ACTON STATION
SITE PLAN DETAIL
RAILROAD ST. ENTRANCE

	DES. BY	DR. BY	CHK. BY
HORIZ: AS SHOWN	JPB	KMB	JM
VERT: NONE			
DATE: 5/17/12			

PLAN NO. 168524

SHEET C-14

ISSUE

FILE NAME: P:\MBTA\2008\E2X37800\CAD\700CADD\702STATIONS\South Acton\Civil\PS&E\ C-13 ~ C-15 Detailed Site Plans.dwg
PLOT DATE: May 21, 2012 – 12:16pm

EAST TO BOSTON

WEST TO FITCHBURG

TOWN OF ACTON

ELEC DUCTBANK TO HEADHOUSE (SEE ELEC DWGS)

FOR HEADHOUSE DETAILS SEE STRUCT AND ARCH DWGS

WETLAND BOUNDARY

RIGHT OF WAY

EGRESS RAMP (SEE STRUCT DWGS)

LENGTH OF CONC WALL

SWITCH

WOOD TIE WALL

1336+00

N 88° 38'18.10" W

1337+00

1338+00

PROPOSED ℄ TRACK 1

PROPOSED ℄ TRACK 2 AND CONST BASELINE (FOR GEOMETRY SEE TRACK DWGS)

TRENCH DRAINS AT ENTRANCE, DRAIN TO TRACKWAY (SEE SITE DETAILS)

TRENCH DRAINS AT ENTRANCES (SEE SITE DETAILS)

800' LONG HIGH LEVEL PLATFORMS (SEE STRUCT DWGS)

PROVIDE 18" FLUSH VGC EVERY 23'± ALONG BACK OF PLAZA CONC. BTWN RAMP & HH (SEE STRUCT DWGS DETAIL)

12" UNDERDRAINS (SEE TYP SECTIONS AND SITE DETAILS)

BIT. CONC. PLATFO

BENCHES

BENCH

BENCHES (TYP)

RELOCATED EX BICYCLE STORAGE UNITS

BIKE STORAGE

R.O.W.

CONC MOW RAMP TO PLATFORM (SEE STRUCT DWGS)

LOAM & SEED DISTURBED AREAS

BIT CONC MOW DRIVEWAY

M.O.W. STORAGE BOX ON CONC PAD

R5-11 SIGN

CONC SW/PLAZA AREA (SEE SITE DETAILS)

8"Ø DOWNSPOUT DRAIN INLET, OUTLET UNDER PLATFORM

DROP BOX

(2) 16' BIKE RACKS (TYP)

OUTBOUND HEADHOUSE (SEE ARCH. DRAWINGS)

FLUSH GRAN CURB AT DROP OFF AREA

CONSTRUCT LEVEL PASSENGER LOADING ZONE

BUS DROP OFF LANE TO REMAIN

ACCESSIBLE RAMP (SEE SITE DETAILS)

FOR HEADHOUSE DETAILS SEE STRUCT AND ARCH DWGS

FLUSH GRAN CURB AT ACCESSIBLE RAMP

REPLACE PAVERS W/ BIT CONC PVMT

REMOVE EX BICYCLE RACKS, GROUT HOLES & REPLACE W/ EX BICYCLE STORAGE UNITS (CONC PADS TO REMAIN)

PVMT MARK (TYP)

2" OVERLAY LIMITS

12' W CROSSWALK

LIGHT POLE TO REMAIN

PVMT MARK (TYP)

VENDOR PARKING

YARD HYDRANT

ACCESSIBLE PATH OF TRAVEL

TREE TO BE REMOVED

8"Ø DOWNSPOUT DRAIN INLET, OUTLET UNDER PLAT

BOLLARD (TYP)

REMOVE PORTION OF RAISED ISLAND

REMOVE TREE

CONVERT TO (8) REGULAR 8.5'x16' PARKING SPACES

62'-5¼"

REMOVE EX SLOPED GC & REPLACE W/ VGC

BIKE RACKS

PLAN

NOTES:

1. SEE SHEET G-3 FOR GENERAL NOTES.
2. FOR HEADHOUSE PLANS AND DETAILS SEE ARCHITECTURAL AND STRUCTURAL DRAWINGS.

LEGEND:

PLATFORM, STAIRS AND ELEVATORS

10 0 10 20

SCALE IN FEET

COMMONWEALTH OF MASSACHUSETTS JONATHAN P. BRUNEAU CIVIL No. 48035 REGISTERED PROFESSIONAL ENGINEER 5·21·12

MASSACHUSETTS BAY TRANSPORTATION AUTHORITY

FITCHBURG COMMUTER RAIL LINE IMPROVEMENT PROJECT CONTRACT NO. G67CN01

SOUTH ACTON STATION SITE PLAN DETAIL CENTRAL STREET DROP OFF

ISSUE	DATE	DESCRIPTION	BY	CHKD.	APP.

HNTB 300 APOLLO DRIVE CHELMSFORD, MA 01824 (978) 905-4000

PROJECT MANAGER 5/30/12 Date

MASSACHUSETTS BAY TRANSPORTATION AUTHORITY

APPROVED BY: PROJECT MANAGER 6/30/12 Date

JACOBS 343 CONGRESS STREET BOSTON, MA 02110 (617) 242-9222

HORIZ: AS SHOWN	DES. BY	DR. BY	CHK. BY	PLAN NO. 168525	ISSUE
VERT: NONE	JPB	KMB	JM		
DATE: 5/17/12				SHEET C-15	

FILE NAME: P:\MBTA\2008\E2X37800\CAD\700CADD\702STATIONS\South Acton\Civil\PS&E\ C-13 ~ C-15 Detailed Site Plans.dwg
PLOT DATE: May 21, 2012 – 12:24pm

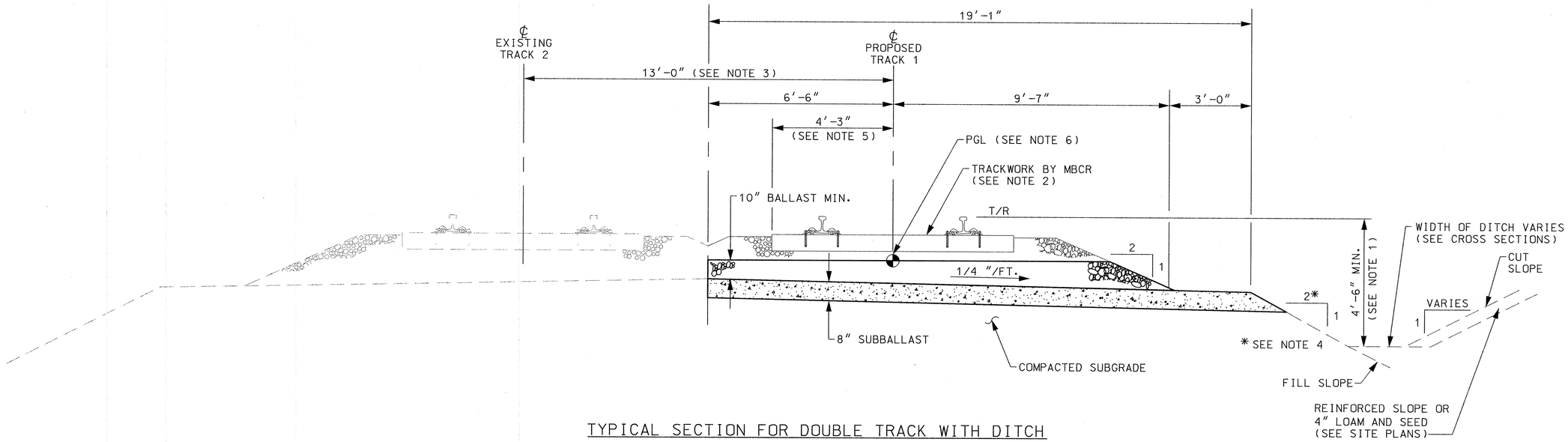

TYPICAL SECTION FOR DOUBLE TRACK WITH DITCH

APPROXIMATE LIMITS: STA. 1338+70 TO 1341+00

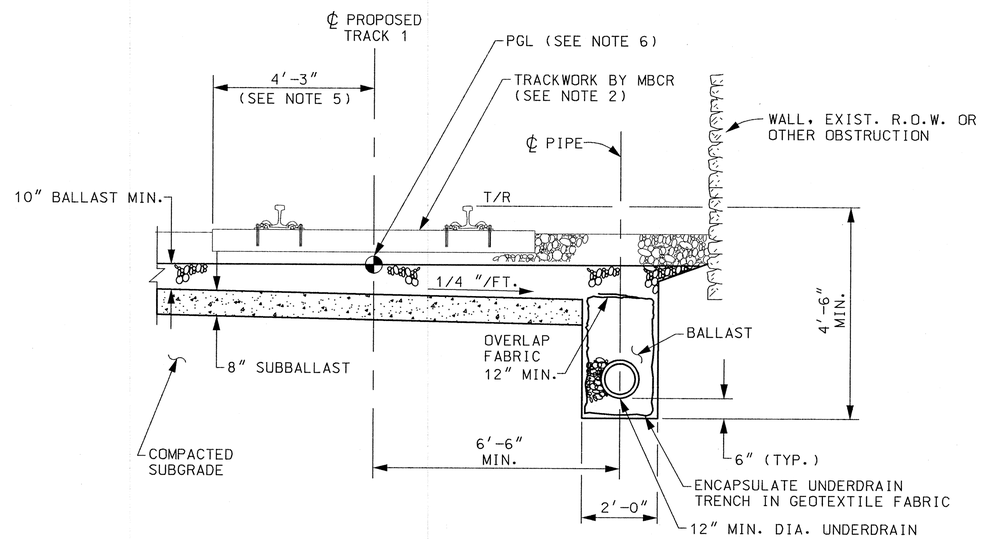

TYPICAL SECTION WITH UNDERDRAIN

APPROXIMATE LIMITS: STA. 1327+70 TO STA. 1330+60

HORIZ. 2 0 2 4

VERT. 2 0 2 4

(SCALE IN FEET)

NOTES:

1. AT LOCATIONS WHERE SUFFICIENT SIDE DITCH IS NOT POSSIBLE AND WHERE INDICATED ON THE PLANS, USE PERFORATED PIPE UNDERDRAIN (12" MIN. DIA.).
2. TRACK WORK INCLUDING FINAL BALLAST LAYER TO BE PERFORMED BY MBCR FORCE ACCOUNT; COORDINATE WITH MBCR.
3. 13'-0" TRACK CENTERS SHOWN. ACTUAL TRACK CENTERS VARY. (SEE TRACK GEOMETRY DATA SHEETS FOR MORE INFORMATION.)
4. USE TYPICAL DIMENSIONS AND 2:1 SLOPES WHEN EXISTING CONDITIONS ALLOW UNLESS OTHERWISE INDICATED. REFER TO CROSS-SECTIONS FOR SPECIFIC DETAILS.
5. 10" MIN. BALLAST DEPTH SHALL BE MEASURED 4'-3" FROM ℄ OF TRACK 1 TOWARD THE TRACK 2 SIDE.
6. PROPOSED GRADE LINE (PGL) IS DEFINED BY THE TRACK 1 PROFILES SHOWN ON SHEETS T-76 THRU T-84 LESS 17" (1'-5"). WORK ABOVE THE PGL WILL BE INSTALLED BY MBCR AND INCLUDES THE FINAL BALLAST LAYER, TRACK TIES, RAIL AND OTM.
7. SEE MBTA RAILROAD OPERATIONS BOOK OF STANDARD PLANS, DRAWING NO. 1018 AND 1019 FOR CLEARANCE REQUIREMENTS ALONG CURVED TRACK AND PLATFORMS.

COMMONWEALTH OF MASSACHUSETTS JONATHAN P. BRUNEAU CIVIL No. 46035 REGISTERED PROFESSIONAL ENGINEER 5-21-12

MASSACHUSETTS BAY TRANSPORTATION AUTHORITY

FITCHBURG COMMUTER RAIL LINE IMPROVEMENT PROJECT CONTRACT NO. G67CN01

SOUTH ACTON STATION
TYPICAL SECTIONS – TRACK BED
SHEET 1 OF 2

ISSUE	DATE	DESCRIPTION	BY	CHKD.	APP.

HNTB 300 APOLLO DRIVE CHELMSFORD, MA 01824 (978) 905-4000

PROJECT MANAGER 5/30/12 Date

MASSACHUSETTS BAY TRANSPORTATION AUTHORITY APPROVED BY 6/30/12 PROJECT MANAGER Date

JACOBS 343 CONGRESS STREET BOSTON, MA 02110 (617) 242-9222

	DES. BY	DR. BY	CHK. BY
HORIZ: AS SHOWN	JPB	KMB	JM
VERT: AS SHOWN			
DATE: 5/17/12			

PLAN NO. 168526

SHEET C-16

ISSUE

FILE NAME: P:\MBTA\2008\E2X37800\CAD\700CADD\702STATIONS\South Acton\Civil\PS&E\ C-16 & C-17 Typical Sections.dwg
PLOT DATE: May 21, 2012 – 12:27pm

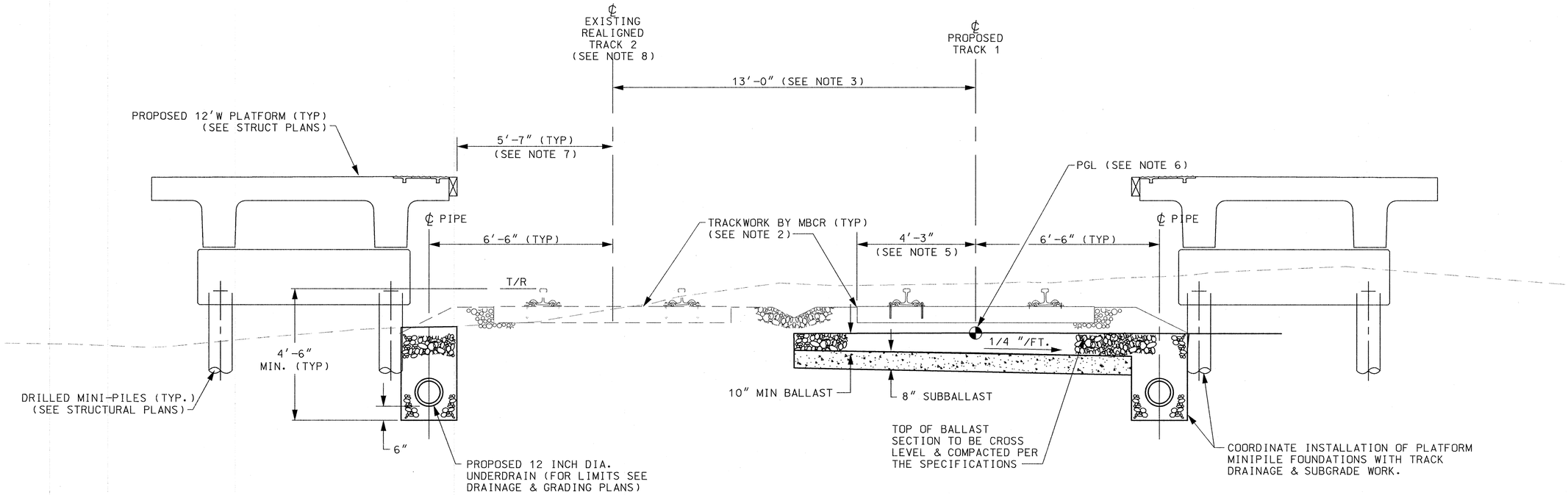

TYPICAL SECTION ALONG PLATFORM

APPROXIMATE LIMITS: STA. 1330+60 TO STA. 1338+60

NOTES:

1. AT LOCATIONS WHERE SUFFICIENT SIDE DITCH IS NOT POSSIBLE AND WHERE INDICATED ON THE PLANS, USE PERFORATED PIPE UNDERDRAIN (12" MIN. DIA.).
2. TRACK WORK INCLUDING FINAL BALLAST LAYER TO BE PERFORMED BY MBCR FORCE ACCOUNT; COORDINATE WITH MBCR.
3. 13'-0" TRACK CENTERS SHOWN. ACTUAL TRACK CENTERS VARY. (SEE TRACK GEOMETRY DATA SHEETS FOR MORE INFORMATION.)
4. USE TYPICAL DIMENSIONS AND 2:1 SLOPES WHEN EXISTING CONDITIONS ALLOW UNLESS OTHERWISE INDICATED. REFER TO CROSS-SECTIONS FOR SPECIFIC DETAILS.
5. 10" MIN. BALLAST DEPTH SHALL BE MEASURED 4'-3" FROM ℄ OF TRACK 1 TOWARD THE TRACK 2 SIDE.
6. PROPOSED GRADE LINE (PGL) IS DEFINED BY THE TRACK 1 PROFILES SHOWN ON SHEETS T-76 THRU T-84 LESS 17" (1'-5"). WORK ABOVE THE PGL WILL BE INSTALLED BY MBCR AND INCLUDES THE FINAL BALLAST LAYER, TRACK TIES, RAIL AND OTM.
7. SEE MBTA RAILROAD OPERATIONS BOOK OF STANDARD PLANS, DRAWING NO. 1018 AND 1019 FOR CLEARANCE REQUIREMENTS ALONG CURVED TRACK AND PLATFORMS.
8. REALIGNMENT & PROFILING OF TRACK 2 TO BE PERFORMED BY MBCR.

HORIZ. 2 0 2 4
VERT. 2 0 2 4
(SCALE IN FEET)

COMMONWEALTH OF MASSACHUSETTS
JONATHAN P. BRUNEAU
CIVIL
No. 46035
REGISTERED PROFESSIONAL ENGINEER
5-21-12

MASSACHUSETTS BAY TRANSPORTATION AUTHORITY

FITCHBURG COMMUTER RAIL LINE
IMPROVEMENT PROJECT
CONTRACT NO. G67CN01

SOUTH ACTON STATION
TYPICAL SECTIONS – TRACK BED
SHEET 2 OF 2

ISSUE	DATE	DESCRIPTION	BY	CHKD.	APP.

HNTB
300 APOLLO DRIVE
CHELMSFORD, MA 01824
(978) 905-4000
PROJECT MANAGER 5/30/12 Date

MASSACHUSETTS BAY TRANSPORTATION AUTHORITY
APPROVED BY:
PROJECT MANAGER 6/30/12 Date

JACOBS
343 CONGRESS STREET
BOSTON, MA 02110
(617) 242-9222

HORIZ: AS SHOWN	DES. BY	DR. BY	CHK. BY	PLAN NO. 168527	ISSUE
VERT: AS SHOWN	JPB	KMB	JM		
DATE: 5/17/12				SHEET C-17	

FILE NAME: P:\MBTA\2008\E2X3780\CAD\700CADD\702STATIONS\South Acton\Civil\PS&E\ C-16 & C-17 Typical Sections.dwg
PLOT DATE: May 21, 2012 – 12:27pm

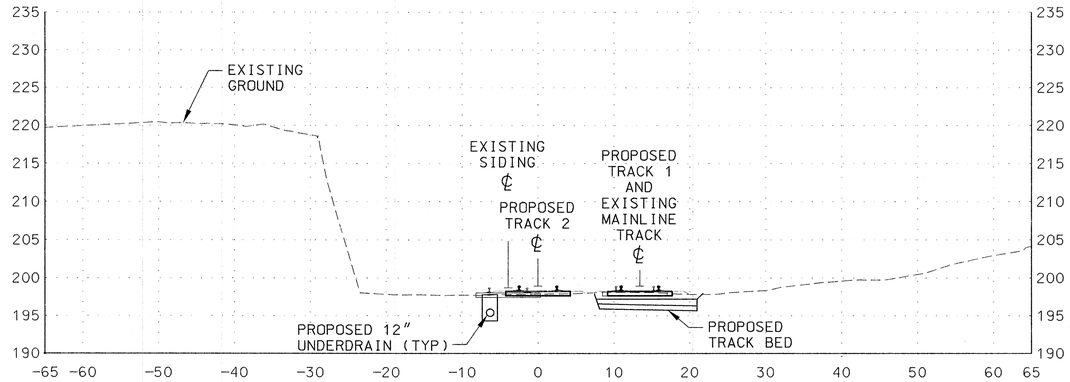

1327+50

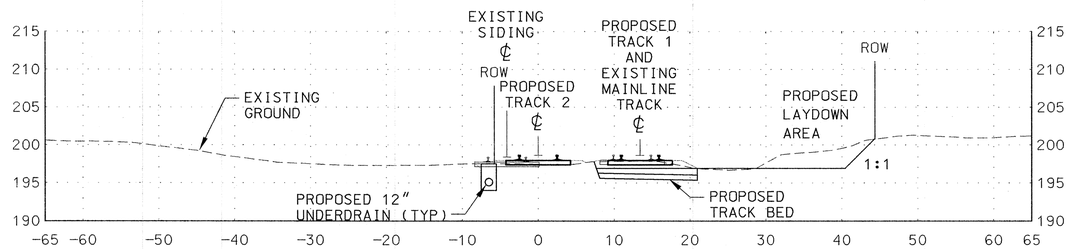

1327+00

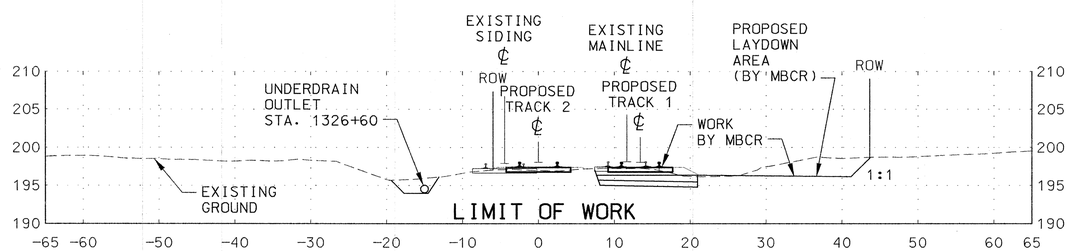

1326+50

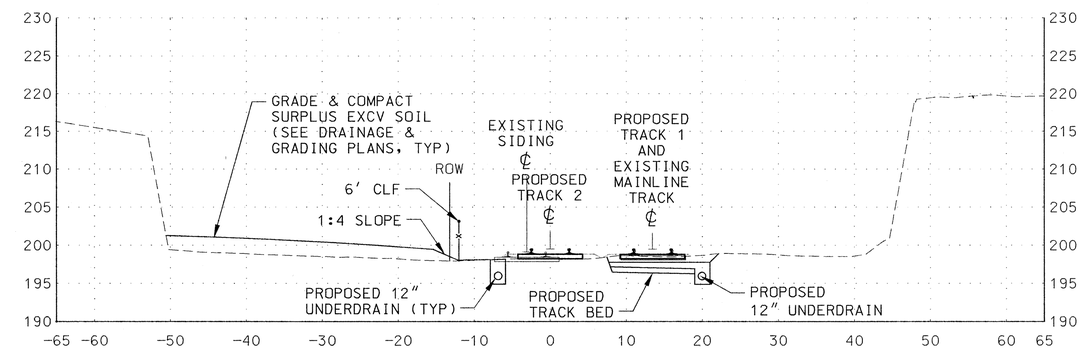

1328+50

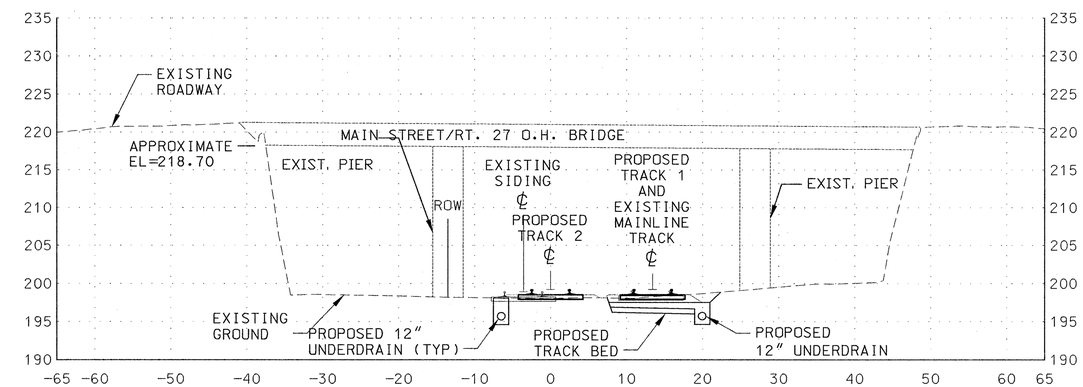

1328+00

LEGEND:

- PROPOSED PROPERTY LINE
- RAILROAD R.O.W.
- WETLAND EDGE

CROSS SECTIONS

NOTES:

1. SEE DEMOLITION PLANS FOR LIMITS OF CLEARING AND GRUBBING.
2. CONTRACTOR IS RESPONSIBLE FOR SUBBALLAST AND INITIAL BALLAST LAYER PER THE TYPICAL TRACK SECTIONS. TRACK WORK, TO INCLUDE RAILS, TIES AND OTM, AND FINAL BALLAST LAYER WILL BE INSTALLED BY MBCR.

HORIZ. 10 0 10 20
VERT. 10 0 10 20
(SCALE IN FEET)

COMMONWEALTH OF MASSACHUSETTS — JONATHAN P. BRUNEAU — CIVIL — No. 46035 — REGISTERED PROFESSIONAL ENGINEER — 5-21-12

ISSUE	DATE	DESCRIPTION	BY	CHKD.	APP.

JACOBS — 343 CONGRESS STREET, BOSTON, MA 02110, (617) 242-9222

HNTB — 300 APOLLO DRIVE, CHELMSFORD, MA 01824, (978) 905-4000

MASSACHUSETTS BAY TRANSPORTATION AUTHORITY

FITCHBURG COMMUTER RAIL LINE
IMPROVEMENT PROJECT
CONTRACT NO. G67CN01

SOUTH ACTON STATION
CROSS SECTIONS
STA. 1326+50 TO 1328+50

PROJECT MANAGER — Date 6/30/12
MASSACHUSETTS BAY TRANSPORTATION AUTHORITY — APPROVED BY: PROJECT MANAGER — Date 6/30/12

HORIZ: AS SHOWN	DES. BY	DR. BY	CHK. BY	PLAN NO. 168530	ISSUE
VERT: AS SHOWN	JPB	CWB	JM		
DATE: 5/17/12				SHEET C-20	

FILE NAME: P:\MBTA\2008\E2X3780D\CAD\700CADD\702STATIONS\South Acton\Civil\PS&E\ C-20 thru C-26 Cross Sections.dwg
PLOT DATE: May 21, 2012 – 12:57pm

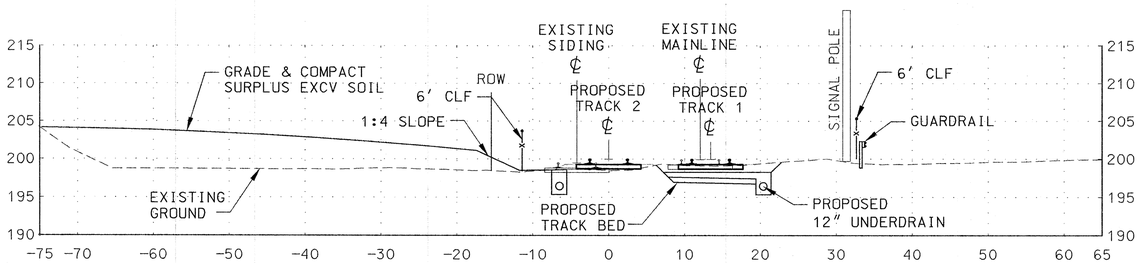

1329+50

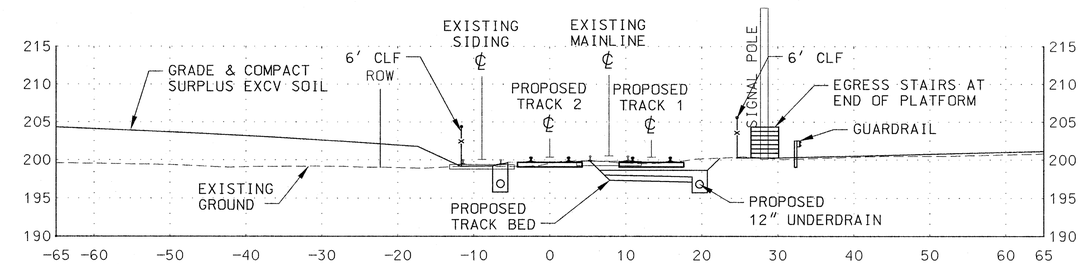

1330+50

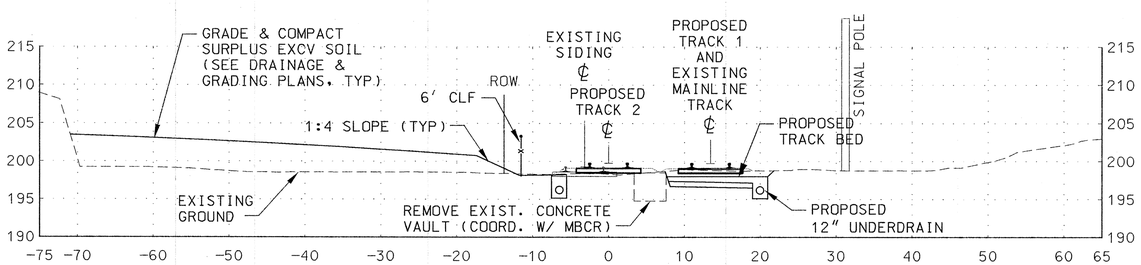

1329+00

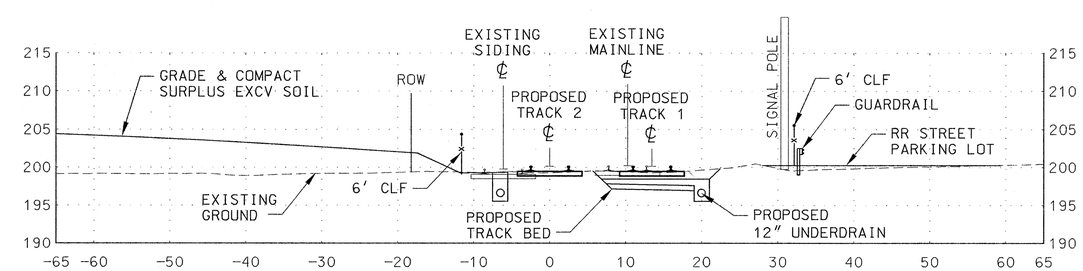

1330+00

CROSS SECTIONS

LEGEND:

- PROPOSED PROPERTY LINE
- RAILROAD R.O.W.
- WETLAND EDGE

NOTES:

1. SEE DEMOLITION PLANS FOR LIMITS OF CLEARING AND GRUBBING.
2. CONTRACTOR IS RESPONSIBLE FOR SUBBALLAST AND INITIAL BALLAST LAYER PER THE TYPICAL TRACK SECTIONS. TRACK WORK, TO INCLUDE RAILS, TIES AND OTM, AND FINAL BALLAST LAYER WILL BE INSTALLED BY MBCR.

HORIZ. 10 0 10 20
VERT. 10 0 10 20
(SCALE IN FEET)

COMMONWEALTH OF MASSACHUSETTS — JONATHAN P. BRUNEAU — CIVIL — No. 46035 — REGISTERED PROFESSIONAL ENGINEER — 5-21-12

ISSUE	DATE	DESCRIPTION	BY	CHKD.	APP.

JACOBS — 343 CONGRESS STREET, BOSTON, MA 02110, (617) 242-9222

MASSACHUSETTS BAY TRANSPORTATION AUTHORITY

FITCHBURG COMMUTER RAIL LINE
IMPROVEMENT PROJECT
CONTRACT NO. G67CN01

SOUTH ACTON STATION
CROSS SECTIONS
STA. 1329+00 TO 1330+50

HNTB — 300 APOLLO DRIVE, CHELMSFORD, MA 01824, (978) 905-4000 — PROJECT MANAGER — Date 5/30/12

MASSACHUSETTS BAY TRANSPORTATION AUTHORITY — APPROVED BY: PROJECT MANAGER — Date 6/30/12

HORIZ: AS SHOWN	DES. BY	DR. BY	CHK. BY	PLAN NO. 168531	ISSUE
VERT: AS SHOWN	JPB	CWB	JM		
DATE: 5/17/12				SHEET C-21	

FILE NAME: P:\MBTA\2008\E2X37800\CAD\700CADD\702STATIONS\South Acton\Civil\PS&E\ C-20 thru C-26 Cross Sections.dwg
PLOT DATE: May 21, 2012 – 12:57pm

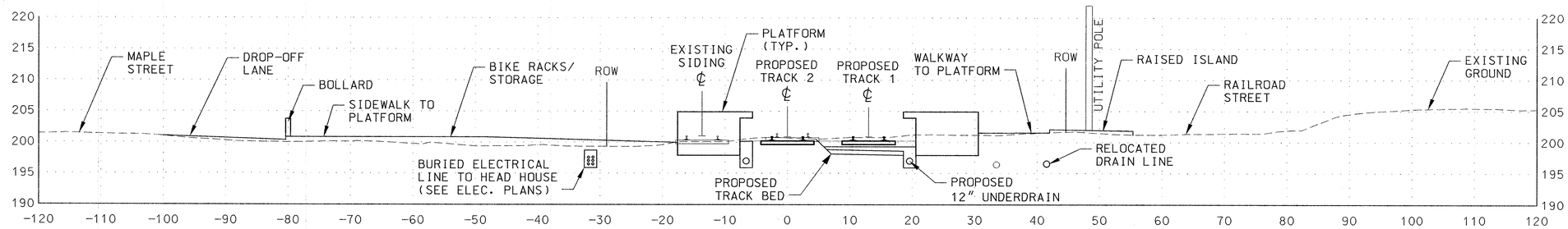

1332+00

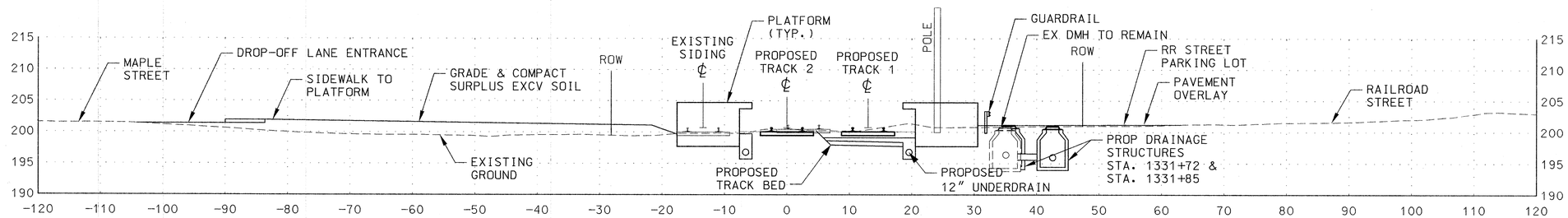

1331+50

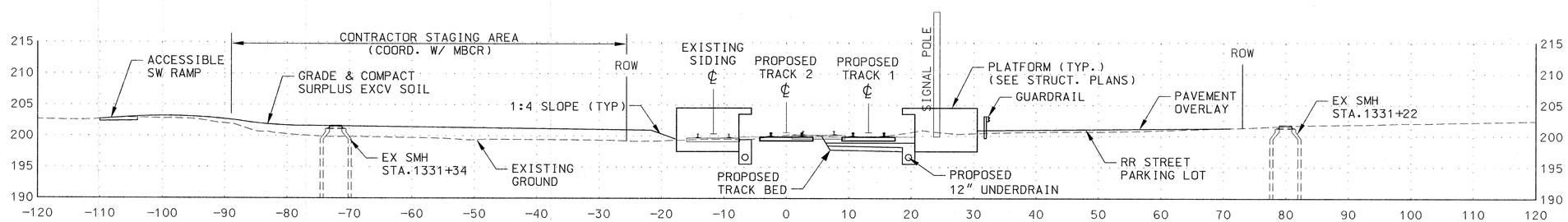

1331+00

LEGEND:

- PROPOSED PROPERTY LINE
- RAILROAD R.O.W.
- WETLAND EDGE

CROSS SECTIONS

NOTES:

1. SEE DEMOLITION PLANS FOR LIMITS OF CLEARING AND GRUBBING.
2. CONTRACTOR IS RESPONSIBLE FOR SUBBALLAST AND INITIAL BALLAST LAYER PER THE TYPICAL TRACK SECTIONS. TRACK WORK, TO INCLUDE RAILS, TIES AND OTM, AND FINAL BALLAST LAYER WILL BE INSTALLED BY MBCR.

HORIZ. 10 0 10 20
VERT. 10 0 10 20
(SCALE IN FEET)

COMMONWEALTH OF MASSACHUSETTS JONATHAN P. BRUNEAU CIVIL No. 46035 REGISTERED PROFESSIONAL ENGINEER 5-21-12

ISSUE	DATE	DESCRIPTION	BY	CHKD.	APP.

JACOBS 343 CONGRESS STREET BOSTON, MA 02110 (617) 242-9222

MASSACHUSETTS BAY TRANSPORTATION AUTHORITY

FITCHBURG COMMUTER RAIL LINE IMPROVEMENT PROJECT CONTRACT NO. G67CN01

SOUTH ACTON STATION CROSS SECTIONS STA. 1331+00 TO 1332+00

HNTB 300 APOLLO DRIVE CHELMSFORD, MA 01824 (978) 905-4000

PROJECT MANAGER Date

MASSACHUSETTS BAY TRANSPORTATION AUTHORITY APPROVED BY: PROJECT MANAGER 6/30/12 Date

HORIZ: AS SHOWN	DES. BY	DR. BY	CHK. BY	PLAN NO. 168532	ISSUE
VERT: AS SHOWN	JPB	CWB	JM		
DATE: 5/17/12				SHEET C-22	

FILE NAME: P:\MBTA\2008\E2X37800\CAD\700CADD\702STATIONS\South Acton\Civil\PS&E\ C-20 thru C-26 Cross Sections.dwg
PLOT DATE: May 21, 2012 - 12:57pm

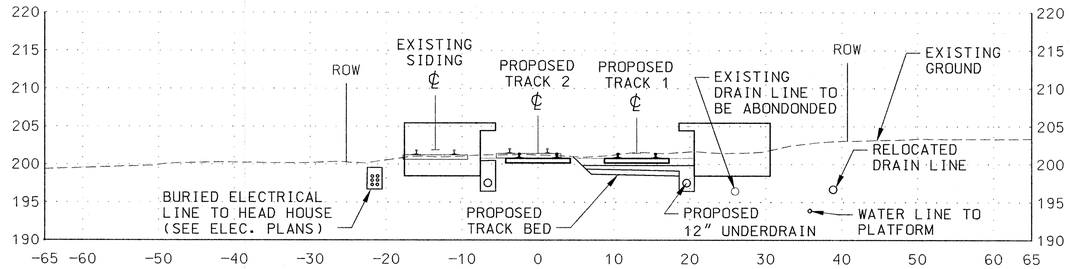

1333+50

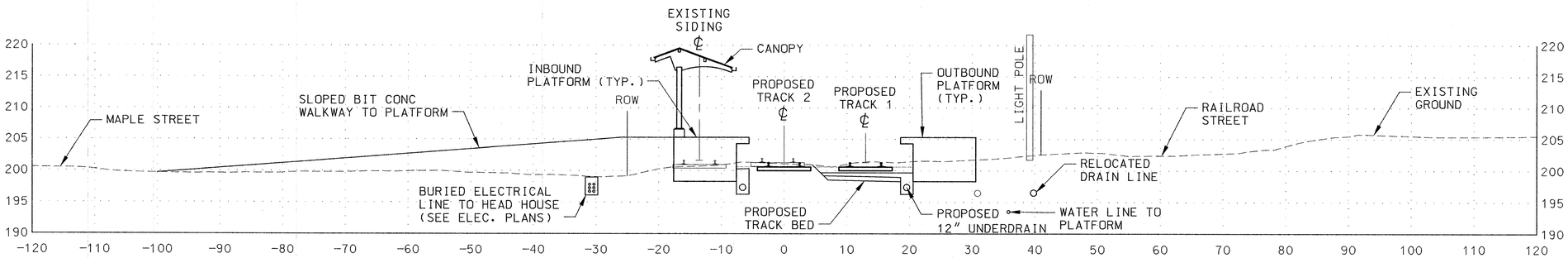

1333+00

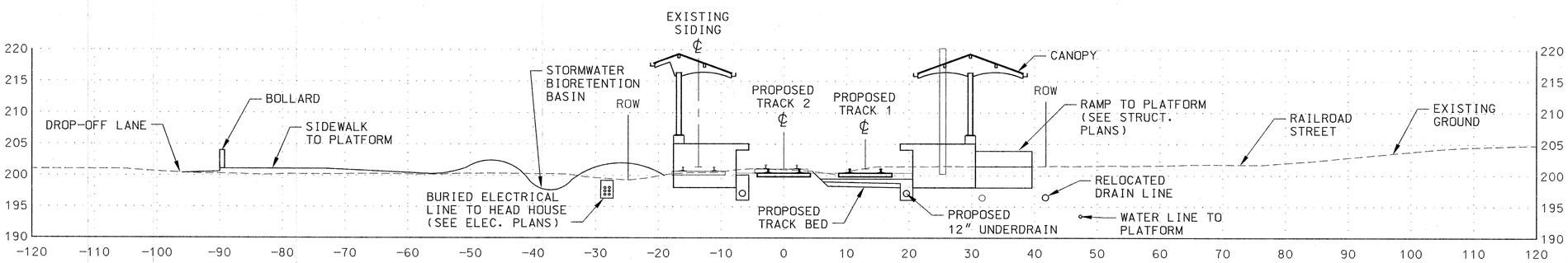

1332+50

LEGEND:

- PROPOSED PROPERTY LINE
- RAILROAD R.O.W.
- WETLAND EDGE

CROSS SECTIONS

NOTES:

1. SEE DEMOLITION PLANS FOR LIMITS OF CLEARING AND GRUBBING.
2. CONTRACTOR IS RESPONSIBLE FOR SUBBALLAST AND INITIAL BALLAST LAYER PER THE TYPICAL TRACK SECTIONS. TRACK WORK, TO INCLUDE RAILS, TIES AND OTM, AND FINAL BALLAST LAYER WILL BE INSTALLED BY MBCR.

HORIZ. 10 0 10 20
VERT. 10 0 10 20
(SCALE IN FEET)

COMMONWEALTH OF MASSACHUSETTS JONATHAN P. BRUNEAU CIVIL No. 46035 REGISTERED PROFESSIONAL ENGINEER 5-21-12

MASSACHUSETTS BAY TRANSPORTATION AUTHORITY

FITCHBURG COMMUTER RAIL LINE
IMPROVEMENT PROJECT
CONTRACT NO. G67CN01

SOUTH ACTON STATION
CROSS SECTIONS
STA. 1332+50 TO 1333+50

ISSUE	DATE	DESCRIPTION	BY	CHKD.	APP.

HNTB 300 APOLLO DRIVE CHELMSFORD, MA 01824 (978) 905-4000
PROJECT MANAGER 5/30/12 Date

MASSACHUSETTS BAY TRANSPORTATION AUTHORITY
APPROVED BY: PROJECT MANAGER 6/30/12 Date

JACOBS 343 CONGRESS STREET BOSTON, MA 02110 (617) 242-9222

HORIZ: AS SHOWN	DES. BY	DR. BY	CHK. BY	PLAN NO. 168533	ISSUE
VERT: AS SHOWN	JPB	CWB	JM		
DATE: 5/17/12				SHEET C-23	

FILE NAME: P:\MBTA\2008\E2X37800\CAD\700CADD\702STATIONS\South Acton\Civil\PS&E\ C-20 thru C-26 Cross Sections.dwg
PLOT DATE: May 21, 2012 - 12:57pm

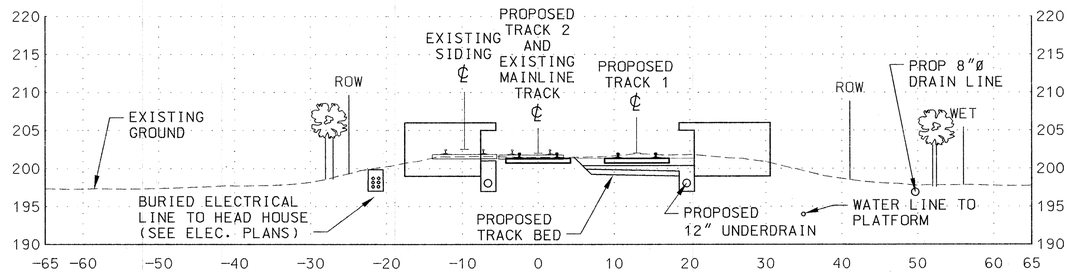

1335+00

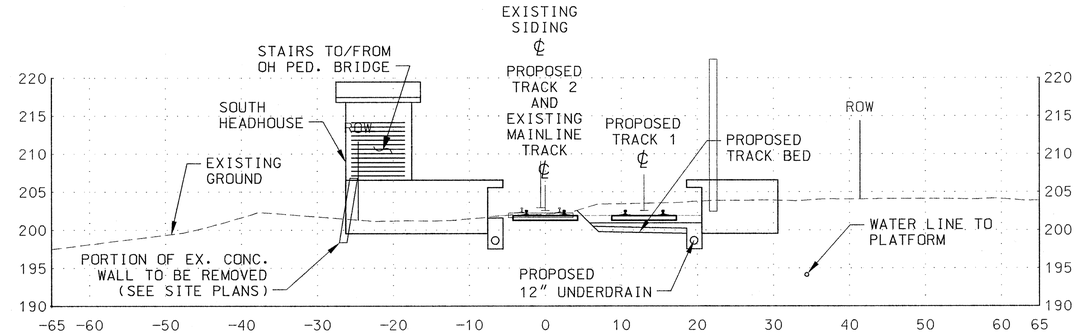

1336+50

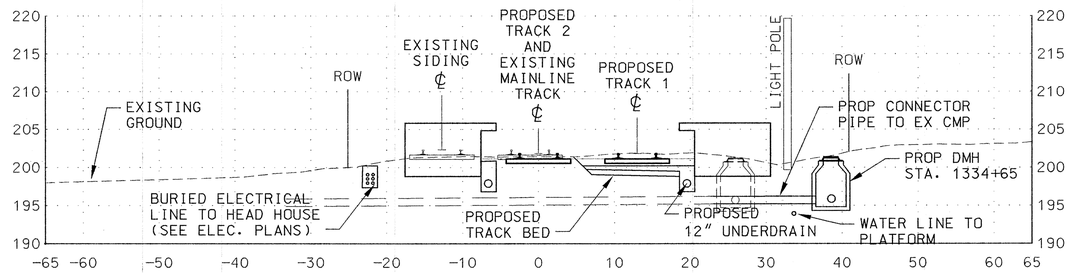

1334+50

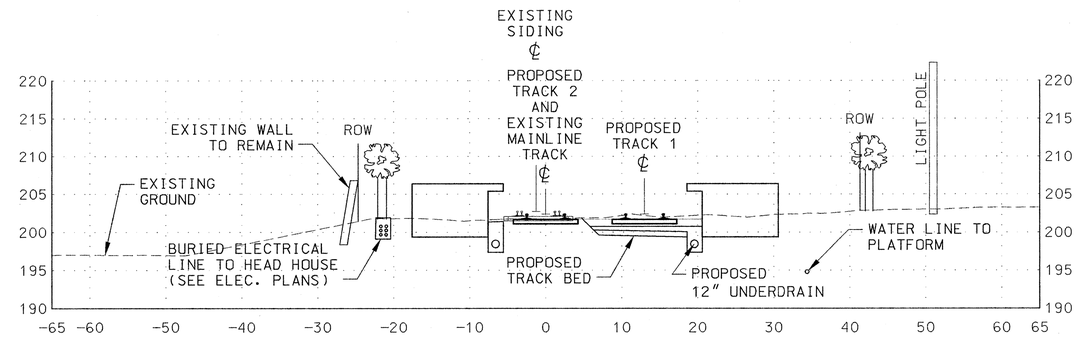

1336+00

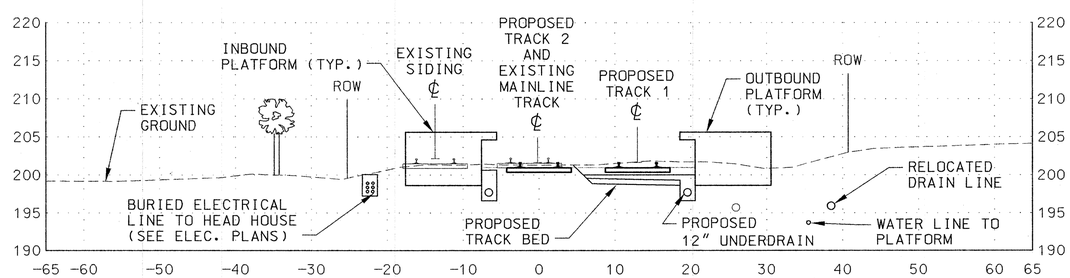

1334+00

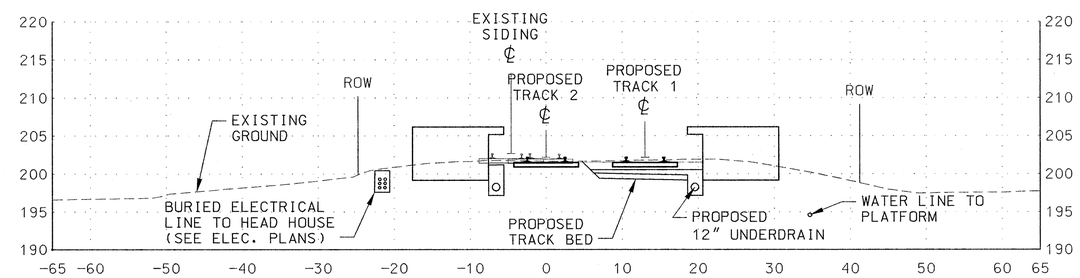

1335+50

LEGEND:

- PROPOSED PROPERTY LINE
- RAILROAD R.O.W.
- WETLAND EDGE

CROSS SECTIONS

NOTES:

1. SEE DEMOLITION PLANS FOR LIMITS OF CLEARING AND GRUBBING.
2. CONTRACTOR IS RESPONSIBLE FOR SUBBALLAST AND INITIAL BALLAST LAYER PER THE TYPICAL TRACK SECTIONS. TRACK WORK, TO INCLUDE RAILS, TIES AND OTM, AND FINAL BALLAST LAYER WILL BE INSTALLED BY MBCR.

HORIZ. 10 0 10 20
VERT. 10 0 10 20
(SCALE IN FEET)

COMMONWEALTH OF MASSACHUSETTS JONATHAN P. BRUNEAU CIVIL No. 46035 REGISTERED PROFESSIONAL ENGINEER 5.21.12

ISSUE	DATE	DESCRIPTION	BY	CHKD.	APP.

JACOBS 343 CONGRESS STREET BOSTON, MA 02110 (617) 242-9222

MASSACHUSETTS BAY TRANSPORTATION AUTHORITY

FITCHBURG COMMUTER RAIL LINE IMPROVEMENT PROJECT CONTRACT NO. G67CN01

SOUTH ACTON STATION CROSS SECTIONS STA. 1334+00 TO 1336+50

HNTB 300 APOLLO DRIVE CHELMSFORD, MA 01824 (978) 905-4000

PROJECT MANAGER 5/24/12 Date

MASSACHUSETTS BAY TRANSPORTATION AUTHORITY APPROVED BY: PROJECT MANAGER 6/30/12 Date

HORIZ: AS SHOWN	DES. BY	DR. BY	CHK. BY	PLAN NO. 168534	ISSUE
VERT: AS SHOWN	JPB	CWB	JM		
DATE: 5/17/12				SHEET C-24	

FILE NAME: P:\MBTA\2008\E2X37800\CAD\700CADD\702STATIONS\South Acton\Civil\PS&E\ C-20 thru C-26 Cross Sections.dwg
PLOT DATE: May 21, 2012 - 12:57pm

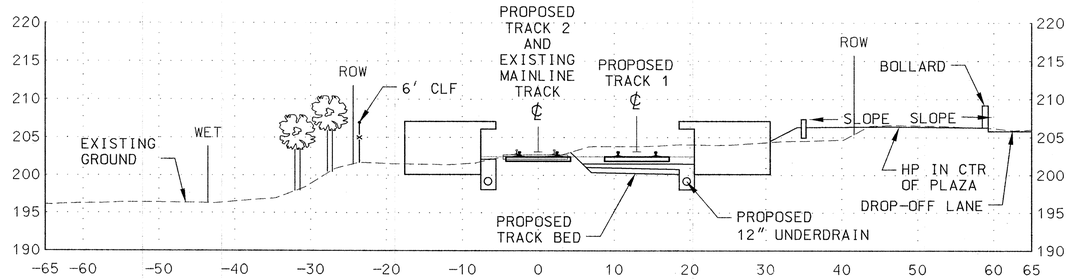

1338+00

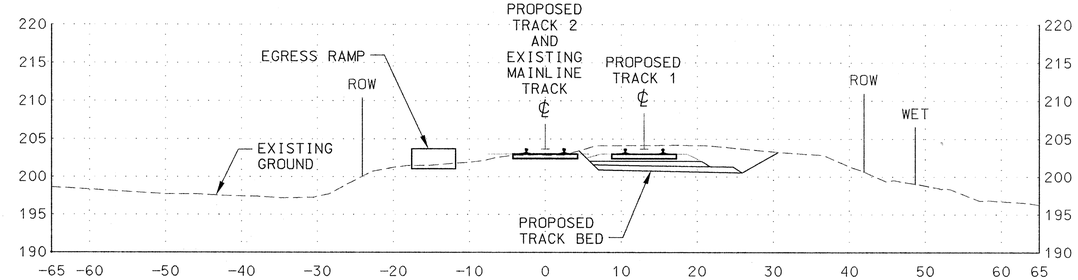

1339+50

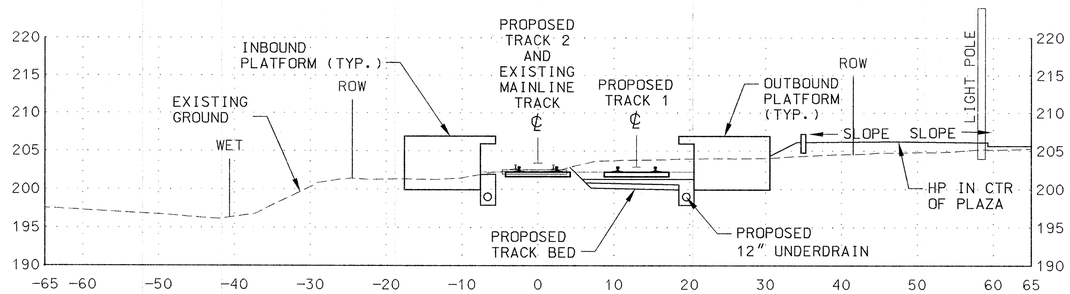

1337+50

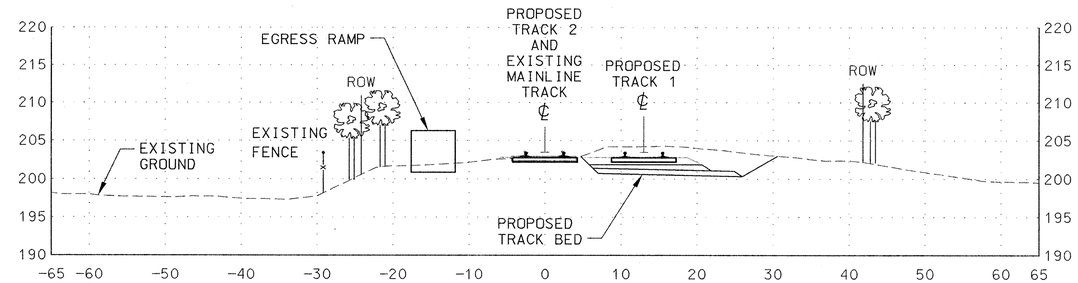

1339+00

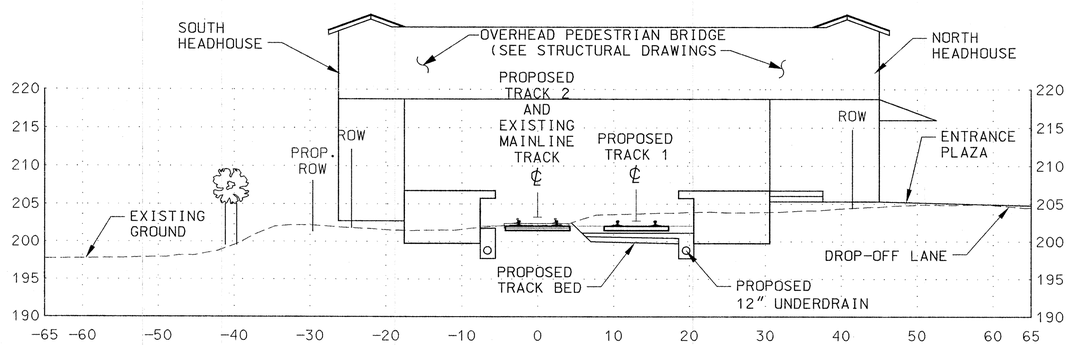

1337+00

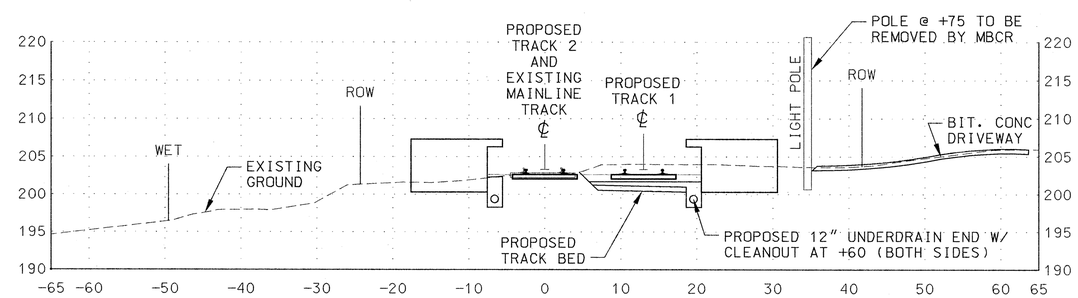

1338+50

LEGEND:

- PROPOSED PROPERTY LINE
- RAILROAD R.O.W.
- WETLAND EDGE

CROSS SECTIONS

NOTES:

1. SEE DEMOLITION PLANS FOR LIMITS OF CLEARING AND GRUBBING.
2. CONTRACTOR IS RESPONSIBLE FOR SUBBALLAST AND INITIAL BALLAST LAYER PER THE TYPICAL TRACK SECTIONS. TRACK WORK, TO INCLUDE RAILS, TIES AND OTM, AND FINAL BALLAST LAYER WILL BE INSTALLED BY MBCR.

HORIZ. 10 0 10 20
VERT. 10 0 10 20
(SCALE IN FEET)

COMMONWEALTH OF MASSACHUSETTS JONATHAN P. BRUNEAU CIVIL No. 46036 REGISTERED PROFESSIONAL ENGINEER 5-21-12

ISSUE	DATE	DESCRIPTION	BY	CHKD.	APP.

JACOBS 343 CONGRESS STREET BOSTON, MA 02110 (617) 242-9222

MASSACHUSETTS BAY TRANSPORTATION AUTHORITY

FITCHBURG COMMUTER RAIL LINE IMPROVEMENT PROJECT CONTRACT NO. G67CN01

SOUTH ACTON STATION CROSS SECTIONS STA. 1337+00 TO 1339+50

HNTB 300 APOLLO DRIVE CHELMSFORD, MA 01824 (978) 905-4000

PROJECT MANAGER 5/30/12 Date

MASSACHUSETTS BAY TRANSPORTATION AUTHORITY APPROVED BY: PROJECT MANAGER 6/30/12 Date

HORIZ: AS SHOWN	DES. BY	DR. BY	CHK. BY	PLAN NO. 168535	ISSUE
VERT: AS SHOWN	JPB	CWB	JM		
DATE: 5/17/12				SHEET C-25	

FILE NAME: P:\MBTA\2008\E2X37800\CAD\700CADD\702STATIONS\South Acton\Civil\PS&E\ C-20 thru C-26 Cross Sections.dwg
PLOT DATE: May 21, 2012 – 12:57pm

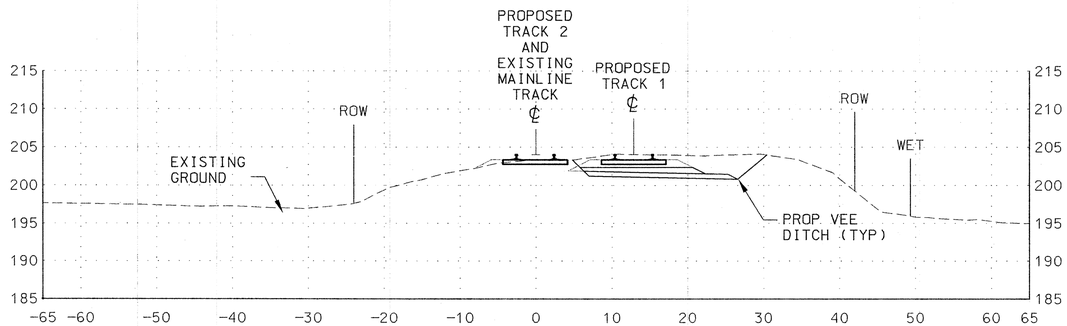

1340+50

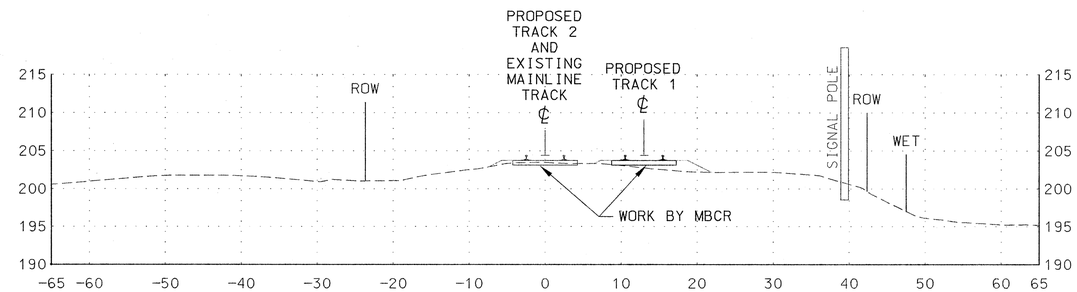

1341+50

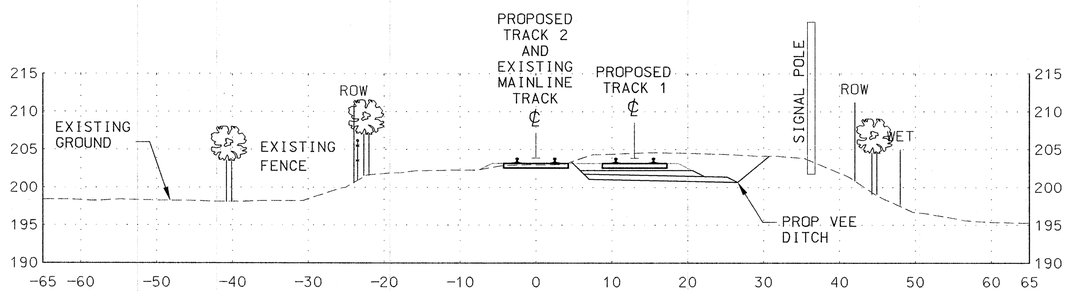

1340+00

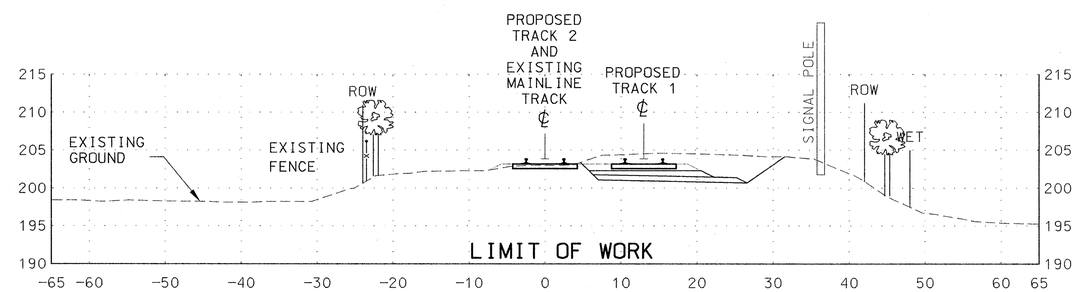

1341+00

LEGEND:

- PROPOSED PROPERTY LINE
- RAILROAD R.O.W.
- WETLAND EDGE

CROSS SECTIONS

NOTES:

1. SEE DEMOLITION PLANS FOR LIMITS OF CLEARING AND GRUBBING.
2. CONTRACTOR IS RESPONSIBLE FOR SUBBALLAST AND INITIAL BALLAST LAYER PER THE TYPICAL TRACK SECTIONS. TRACK WORK, TO INCLUDE RAILS, TIES AND OTM, AND FINAL BALLAST LAYER WILL BE INSTALLED BY MBCR.

HORIZ. 10 0 10 20
VERT. 10 0 10 20
(SCALE IN FEET)

COMMONWEALTH OF MASSACHUSETTS
JONATHAN P. BRUNEAU
CIVIL
No. 46035
REGISTERED PROFESSIONAL ENGINEER
5-21-12

ISSUE	DATE	DESCRIPTION	BY	CHKD.	APP.

JACOBS 343 CONGRESS STREET BOSTON, MA 02110 (617) 242-9222

MASSACHUSETTS BAY TRANSPORTATION AUTHORITY

FITCHBURG COMMUTER RAIL LINE
IMPROVEMENT PROJECT
CONTRACT NO. G67CN01

SOUTH ACTON STATION
CROSS SECTIONS
STA. 1340+00 TO 1342+00

HNTB 300 APOLLO DRIVE CHELMSFORD, MA 01824 (978) 905-4000

PROJECT MANAGER 5/30/12 Date

MASSACHUSETTS BAY TRANSPORTATION AUTHORITY
APPROVED BY: PROJECT MANAGER 6/30/12 Date

HORIZ: AS SHOWN	DES. BY	DR. BY	CHK. BY	PLAN NO. 168536
VERT: AS SHOWN	JPB	CWB	JM	SHEET C-26
DATE: 5/17/12				

ISSUE

FILE NAME: P:\MBTA\2008\E2X37800\CAD\700CADD\702STATIONS\South Acton\Civil\PS&E\ C-20 thru C-26 Cross Sections.dwg
PLOT DATE: May 21, 2012 - 12:56pm

TRAFFIC SIGN SUMMARY

IDENTIFI-CATION NUMBER	SIZE OF SIGN		TEXT	TEXT DIMENSIONS (INCHES)			NUMBER OF SIGNS REQUIRED	COLOR			POST SIZE AND NUMBER REQUIRED	UNIT AREA (S.F.)	AREA IN SQUARE FEET
	WIDTH	HEIGHT		LETTER	VERTICAL	ARROW		BACK-GROUND	LEGEND	BORDER			
R1-1	30"	30"		1	1	1	1	1	1	1	P-5 2 REQ'D	6.25	12.50
R3-2	24"	24"					1				P-5 1 REQ'D	4.00	16.00
R5-1	30"	30"					2				P-5 2 REQ'D	6.25	18.75
R6-1	36"	12"					1				MOUNT W/ R3-2	3.00	9.00
R5-11	30"	24"					2				MOUNT W/ R3-2	5.00	20.00

NOTES:

1. SEE THE CURRENT EDITION OF MUTCD, 1979 STD. HWY. SIGNS AND SECTION M9.30.0 TYPE III OF THE MASSDOT STANDARD SPECIFICATION FOR TEXT DIMENSIONS AND COLOR.

2. HIGH INTENSITY ENCAPSULATED LENS REFLECTIVE SHEETING SHALL BE USED FOR ALL SIGNS. THE "MANUAL ON UNIFORM TRAFFIC CONTROL DEVICES" CURRENT EDITION, THE 1996 MASSDOT CONSTRUCTION AND TRAFFIC STANDARD DETAILS", AND ALL ADMENDMENTS WILL GOVERN.

COMMONWEALTH OF MASSACHUSETTS
JONATHAN P. BRUNEAU
CIVIL
No. 46035
REGISTERED PROFESSIONAL ENGINEER
5-21-12

MASSACHUSETTS BAY TRANSPORTATION AUTHORITY

FITCHBURG COMMUTER RAIL LINE
IMPROVEMENT PROJECT
CONTRACT NO. G67CN01

SOUTH ACTON STATION
TRAFFIC SIGN SUMMARY

ISSUE	DATE	DESCRIPTION	BY	CHKD.	APP.

HNTB
300 APOLLO DRIVE
CHELMSFORD, MA 01824
(978) 905-4000

PROJECT MANAGER 5/30/12 Date

MASSACHUSETTS BAY TRANSPORTATION AUTHORITY
APPROVED BY:
PROJECT MANAGER 6/30/12 Date

JACOBS
343 CONGRESS STREET
BOSTON, MA 02110
(617) 242-9222

HORIZ: NONE
VERT: NONE
DATE: 5/17/12

DES. BY	DR. BY	CHK. BY
JPB	KMG	JM

PLAN NO. 168539
SHEET C-29
ISSUE

FILE NAME: P:\MBTA\2008\E2X3780\CAD\700CADD\702STATIONS\South Acton\Civil\PS&E\ C-29 Traffic Sign Summary Plan.dwg
PLOT DATE: May 21, 2012 - 1:03pm

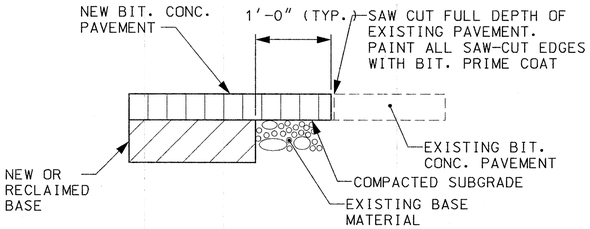

PAVEMENT BUTT JOINT DETAIL

N.T.S.

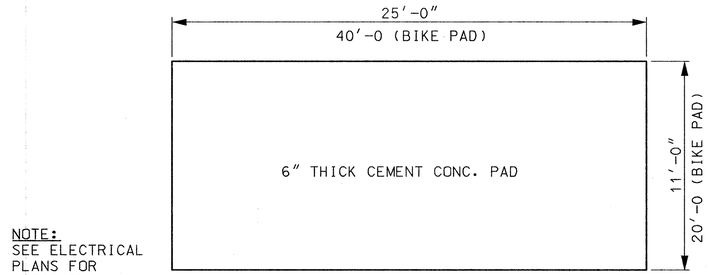

NOTE:
SEE ELECTRICAL PLANS FOR ADDITIONAL DETAILS

PLAN

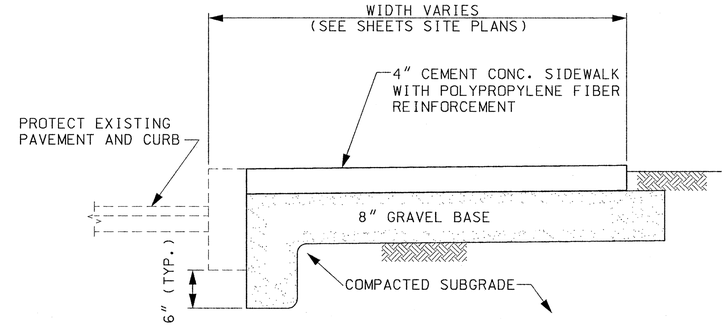

CONCRETE SIDEWALK AND DROP OFF AREA DETAIL

N.T.S.

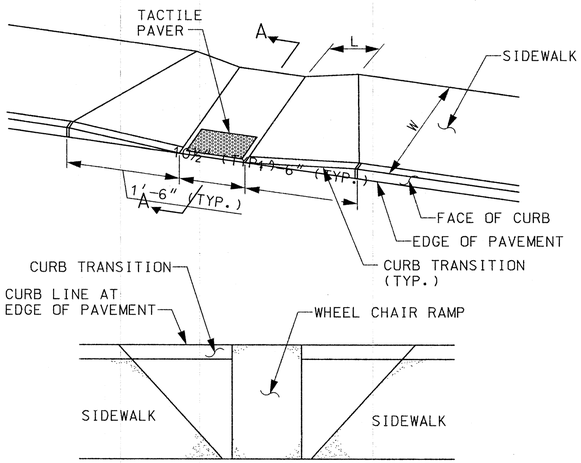

PLAN

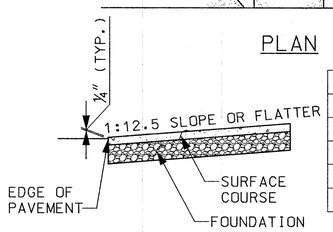

SECTION A-A

W	L	S.Y.
4'-0"	3'-6"±	5.2
5'-0"	2'-9"±	6.3
6'-0"	2'-0"±	7.2
7'-0"	1'-3"±	8.0
8'-0"	0'-0"	8.1

NOTE:
ALL RAMPS TO BE CONSTRUCTED PER THE LATEST AMERICANS WITH DISABILITIES ACT REQUIREMENTS

ACCESSIBLE RAMP DETAIL

N.T.S.

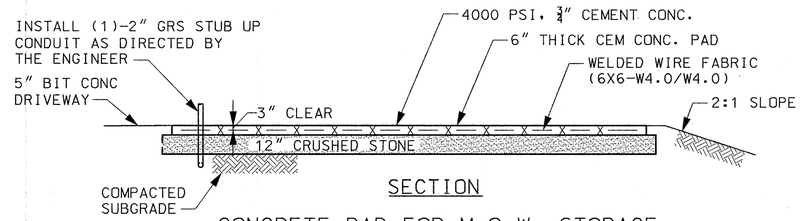

SECTION

CONCRETE PAD FOR M.O.W. STORAGE BUILDING & BIKE STORAGE PAD AT MAPLE ST. DROP OFF

N.T.S.

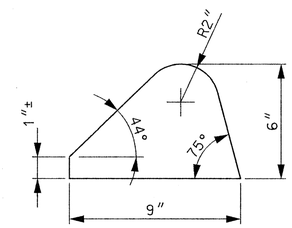

BITUMINOUS CONCRETE CURB - TYPE 2

N.T.S.

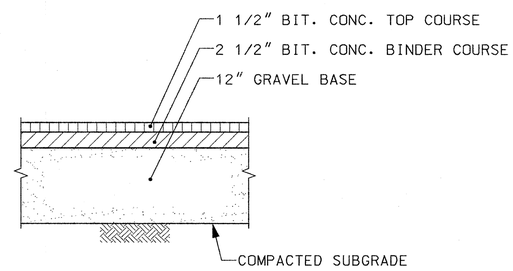

FULL DEPTH PAVEMENT DETAIL FOR PARKING LOTS AND WALKWAYS

N.T.S.

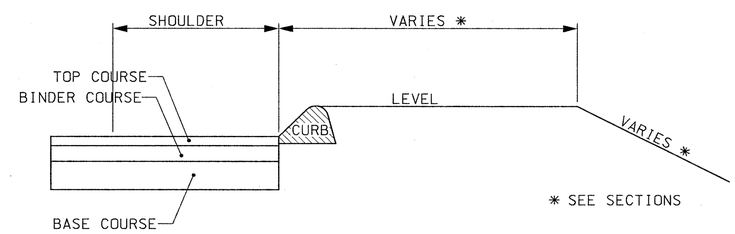

METHOD OF SETTING CURB

N.T.S.

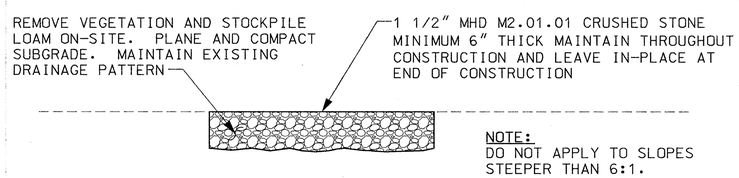

NOTE:
DO NOT APPLY TO SLOPES STEEPER THAN 6:1.

CRUSHED STONE MAT

N.T.S.

COMMONWEALTH OF MASSACHUSETTS
JONATHAN P. BRUNEAU
CIVIL
No. 46035
REGISTERED PROFESSIONAL ENGINEER
5-21-12

MASSACHUSETTS BAY TRANSPORTATION AUTHORITY

FITCHBURG COMMUTER RAIL LINE
IMPROVEMENT PROJECT
CONTRACT NO. G67CN01

SOUTH ACTON STATION
SITE DETAILS
SHEET 1 OF 4

ISSUE	DATE	DESCRIPTION	BY	CHKD.	APP.

HNTB
300 APOLLO DRIVE
CHELMSFORD, MA 01824
(978) 905-4000
PROJECT MANAGER 5/30/12 Date

MASSACHUSETTS BAY TRANSPORTATION AUTHORITY
APPROVED BY: 6/30/12
PROJECT MANAGER Date

JACOBS
343 CONGRESS STREET
BOSTON, MA 02110
(617) 242-9222

HORIZ: N/A
VERT: NONE
DATE: 5/17/12

DES. BY	DR. BY	CHK. BY
JGA	CWB	JM

PLAN NO. 168540
SHEET C-30
ISSUE

FILE NAME: P:\MBTA\2008\E2X37800\CAD\700CADD\702STATIONS\South Acton\Civil\PS&E\ C-30 Site Details Sheet 1 of 4.dwg
PLOT DATE: May 21, 2012 - 1:23pm

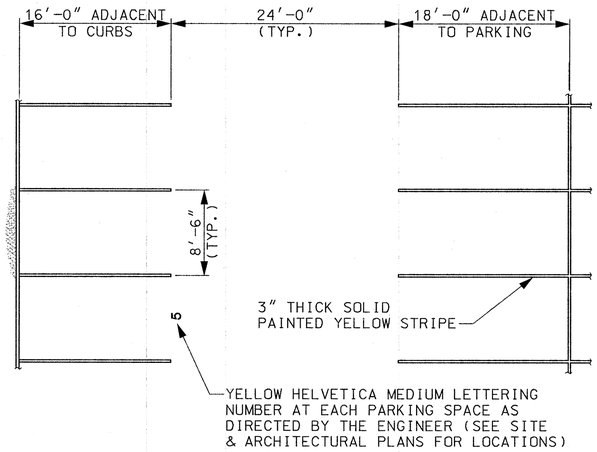

TYPICAL PARKING DETAIL

N.T.S.

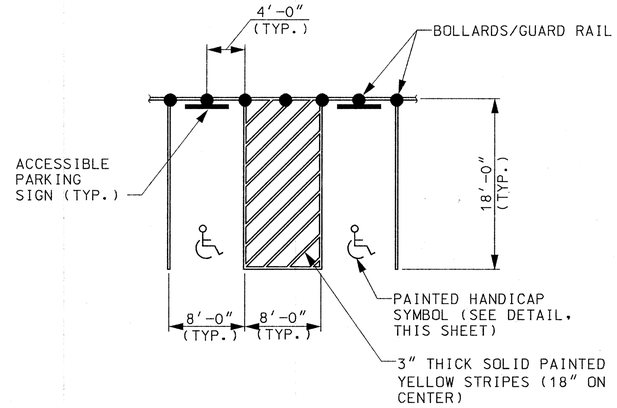

TYPICAL HANDICAP VAN PARKING STALL DETAIL

N.T.S.

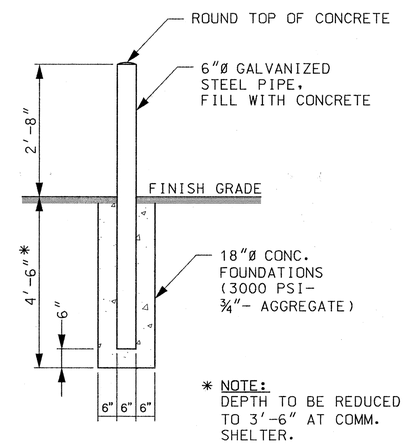

BOLLARD DETAIL

N.T.S.

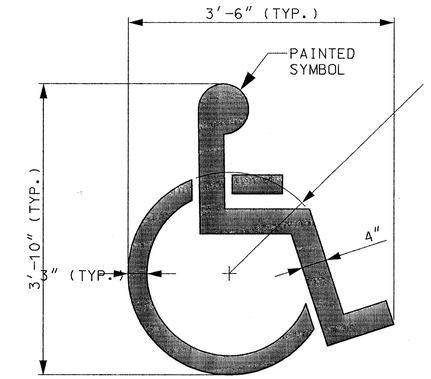

PAINTED ACCESSIBLE SYMBOL DETAIL

N.T.S.

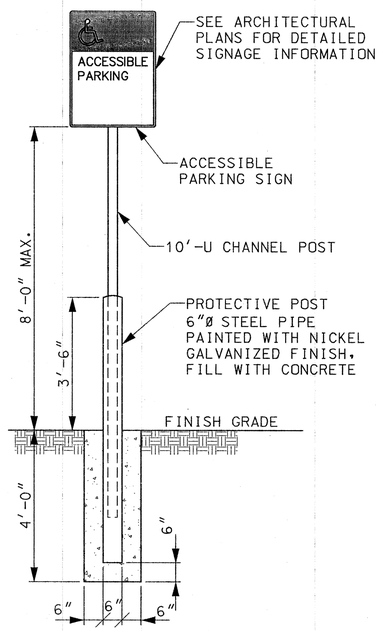

TYPICAL CHANNEL MOUNTING FOR ACCESSIBLE SIGNS

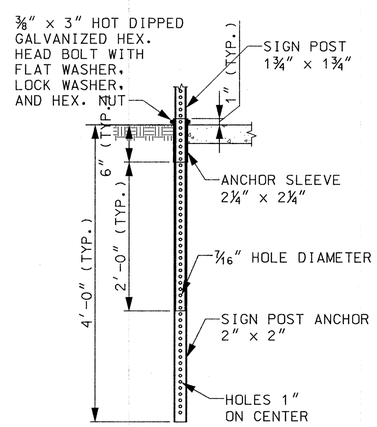

SIGN SIZE	TELESCOPIC POST SIZE
5 S.F. AND UNDER	1 - 1¾" x 1¾"
OVER 5 S.F. UP TO 10 S.F.	1 - 2" x 2"
OVER 10 S.F. UP TO 20 S.F.*	2 - 2" x 2"

* SIGNS WITH A WIDTH OF 4' AND OVER SHALL REQUIRE 2 POSTS

P-5 TELESCOPIC POST DETAIL

N.T.S.

P-5 POST GENERAL NOTES:

1. BREAKAWAY SIGN SUPPORTS SHALL BE FABRICATED FROM STEEL AND SHALL CONFORM TO MASSACHUSETTS DEPT. OF PUBLIC WORKS STANDARD SPECIFICATIONS FOR HIGHWAYS AND BRIDGES, AND STANDARD DRAWINGS FOR SIGNS AND SUPPORTS (CURRENT EDITIONS).

2. THE STEEL POSTS SHALL CONFORM TO ASTM-A366. THE CROSS SECTION OF THE POST SHALL BE SQUARE TUBE FORMED OF 12 GAUGE (.105" U.S.S. GRADE) COLD-ROLLED CARBON STEEL SHEETS WHICH HAVE BEEN ZINC COATED (1.25 oz.) CONFORMING TO ASTM-A525, CAREFULLY ROLLED TO SIZE AND WELDED DIRECTLY IN THE CORNER BY HIGH FREQUENCY RESISTANCE WELDING OR EQUAL AND EXTERNALLY SCARFED TO AGREE WITH CORNER RADII. STANDARD OUTSIDE CORNER RADIUS SHALL BE 5/32" ±1/64". ALL BOLTS SHALL CONFORM TO ASTM-A307, CLASS A. ALL BOLTS, NUTS AND WASHERS SHALL BE GALVANIZED AS PER ASTM-A153.

METHOD OF INSTALLATION:

(CONCRETE, BITUMINOUS CONCRETE, OR GROUND SURFACES)

1. SIGN POST ANCHOR CAN BE DRIVEN THROUGH BLACK TOP SURFACES WITHOUT FIRST MAKING A HOLE. HOWEVER, IN CONCRETE, BREAKING A HOLE WILL BE NECESSARY. DRIVE SIGN POST ANCHOR TO WITHIN THREE OR FOUR INCHES OF SURFACE.

2. PRE-CUT ANCHOR SLEEVE SO THAT THE HOLES WILL MATCH AND STILL BE FLUSH WITH TOP OF SIGN POST ANCHOR. DRIVE ANCHOR SLEEVE UNTIL HOLES MATCH AS NOTED ABOVE, THEN DRIVE BOTH THE SIGN POST ANCHOR AND ANCHOR AND ANCHOR SLEEVE UNTIL ONE HOLE IS EXPOSED ABOVE GROUND FOR BOLT CONNECTION.

3. INSERT SIGN POST AND BOLT IN PLACE.

NOTE: DRIVING CAPS MUST BE USED TO DRIVE POSTS.

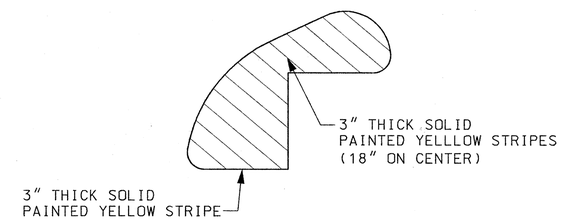

TYPICAL STRIPED ISLAND DETAIL

N.T.S.

COMMONWEALTH OF MASSACHUSETTS
JONATHAN P. BRUNEAU
CIVIL
No. 48245
REGISTERED PROFESSIONAL ENGINEER
5-21-12

MASSACHUSETTS BAY TRANSPORTATION AUTHORITY

FITCHBURG COMMUTER RAIL LINE IMPROVEMENT PROJECT
CONTRACT NO. G67CN01

SOUTH ACTON STATION
SITE DETAILS
SHEET 2 OF 4

ISSUE	DATE	DESCRIPTION	BY	CHKD.	APP.

HNTB — 300 APOLLO DRIVE, CHELMSFORD, MA 01824, (978) 905-4000 — PROJECT MANAGER — Date 5/18/12

MASSACHUSETTS BAY TRANSPORTATION AUTHORITY — APPROVED BY: PROJECT MANAGER — Date 6/30/12

JACOBS — 343 CONGRESS STREET, BOSTON, MA 02110, (617) 242-9222

HORIZ: N/A
VERT: NONE
DATE: 5/17/12

DES. BY	DR. BY	CHK. BY
JPB	CWB	JM

PLAN NO. 168541
SHEET C-31
ISSUE

FILE NAME: P:\MBTA\2008\E2X37800\CAD\700CADD\702STATIONS\South Acton\Civil\PS&E\ C-31 Site Details Sheet 2 of 4.dwg
PLOT DATE: May 21, 2012 - 1:26pm

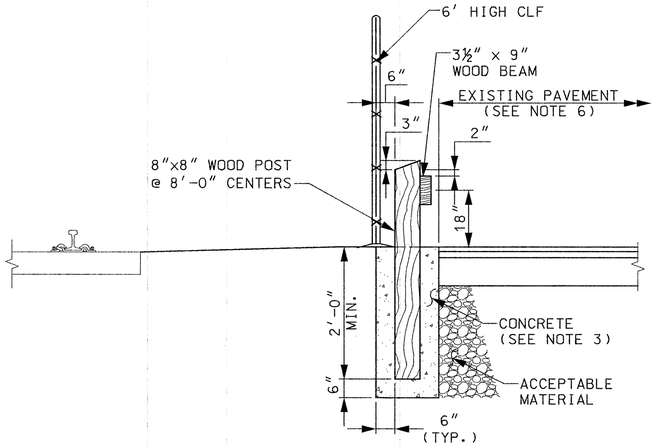

PLACEMENT

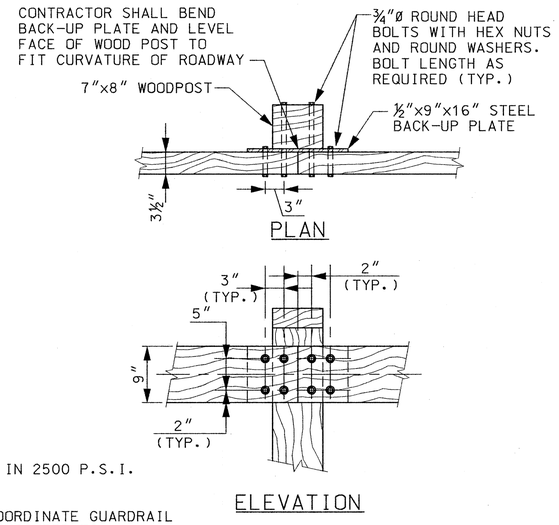

NOTES:

1. BACKUP PLATE, BOLTS, NUTS, & WASHERS TO BE GALVANIZED.
2. WOOD POSTS AND BEAMS SHALL BE STANDARD ROUGH SAWN AND TO THE SIZE AND LENGTHS SHOWN. POST AND RAILS SHALL BE SOUTHERN YELLOW PINE. ALL WOOD SHALL BE PRESSURE-TREATED WITH PENTACHLOROPHENOL WITH A MINIMUM RETENTION OF 0.60 POUNDS PER CU. FT. OF WOOD OR TREATED IN ACCORDANCE WITH AWDA SPECIFICATION C2.
3. POSTS SHALL BE SET IN 2500 P.S.I. BACKFILL CONCRETE.
4. CONTRACTOR SHALL COORDINATE GUARDRAIL INSTALLATION WITH ENGINEER TO MAINTAIN SUFFICIENT COMMUTER PARKING AT ALL TIMES.
5. SEE SITE PLANS FOR GUARDRAIL LIMITS.
6. CONTRACTOR TO PROTECT EXISTING PAVEMENT DURING INSTALLATION.

WOOD GUARDRAIL

N.T.S.

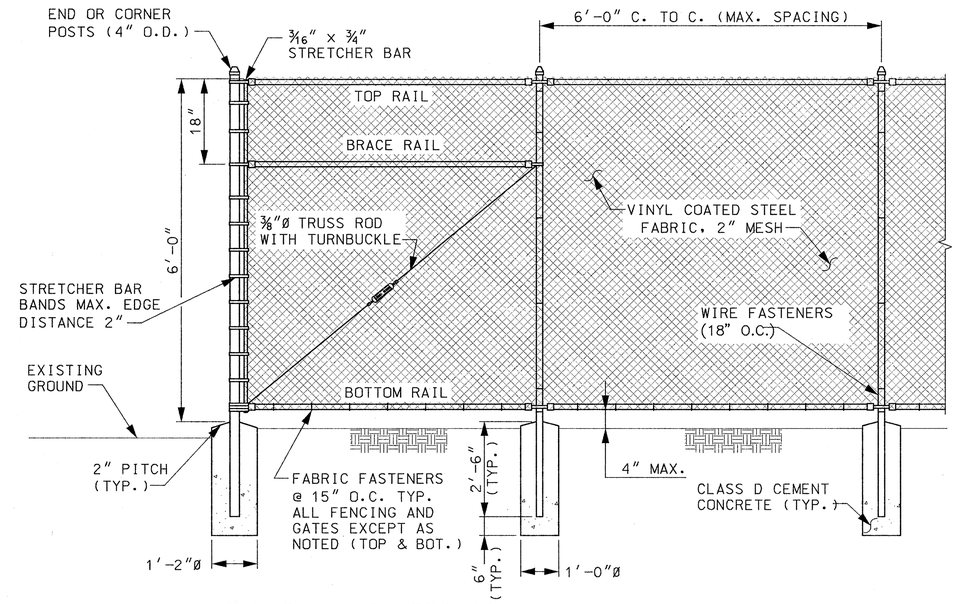

TYPICAL END, CORNER OR BRACE PANEL

TYPICAL INTERMEDIATE PANEL

6' HIGH CHAIN LINK FENCE DETAIL

N.T.S.

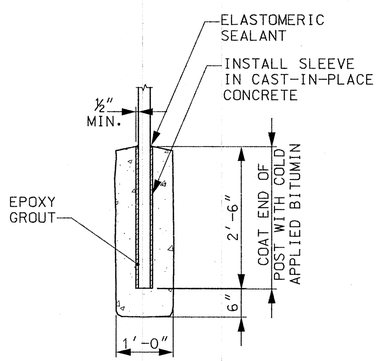

FENCE POST ANCHORED IN CONCRETE

N.T.S.

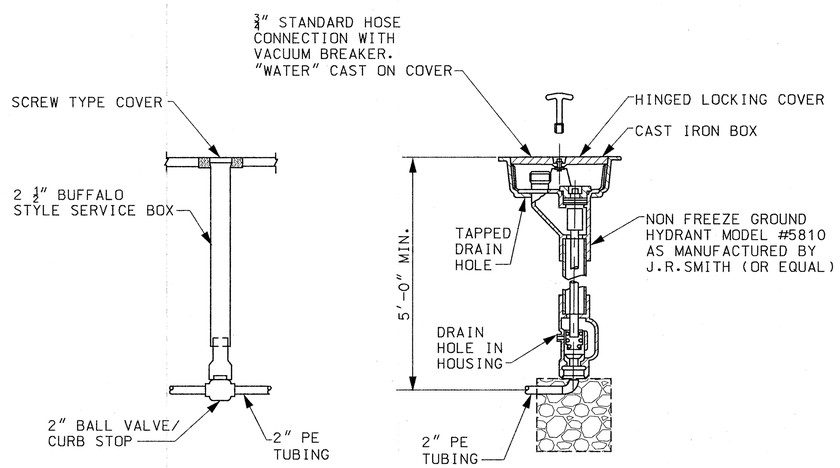

PLATFORM WASHDOWN HYDRANT

N.T.S.

COMMONWEALTH OF MASSACHUSETTS JONATHAN P. BRUNEAU CIVIL No. 49035 REGISTERED PROFESSIONAL ENGINEER 5-21-12

ISSUE	DATE	DESCRIPTION	BY	CHKD.	APP.

JACOBS 343 CONGRESS STREET BOSTON, MA 02110 (617) 242-9222

HNTB 300 APOLLO DRIVE CHELMSFORD, MA 01824 (978) 905-4000

PROJECT MANAGER 5/30/12 Date

MASSACHUSETTS BAY TRANSPORTATION AUTHORITY

APPROVED BY: PROJECT MANAGER 6/30/12 Date

MASSACHUSETTS BAY TRANSPORTATION AUTHORITY

FITCHBURG COMMUTER RAIL LINE IMPROVEMENT PROJECT CONTRACT NO. G67CN01

SOUTH ACTON STATION SITE DETAILS SHEET 3 OF 4

HORIZ: N/A	DES. BY	DR. BY	CHK. BY	PLAN NO. 168542	ISSUE
VERT: NONE	JGA	CWB	JM		
DATE: 5/17/12				SHEET C-32	

FILE NAME: P:\MBTA\2008\E2X37800\CAD\700CADD\702STATIONS\South Acton\Civil\PS&E\ C-32 Site Details Sheet 3 of 4.dwg
PLOT DATE: May 21, 2012 - 1:28pm

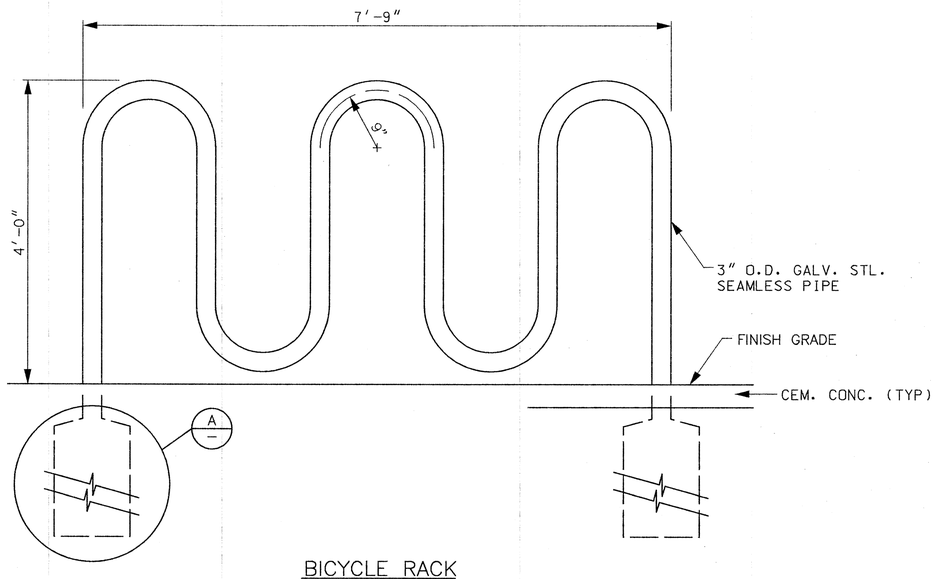

BICYCLE RACK
3/4" = 1'-0"

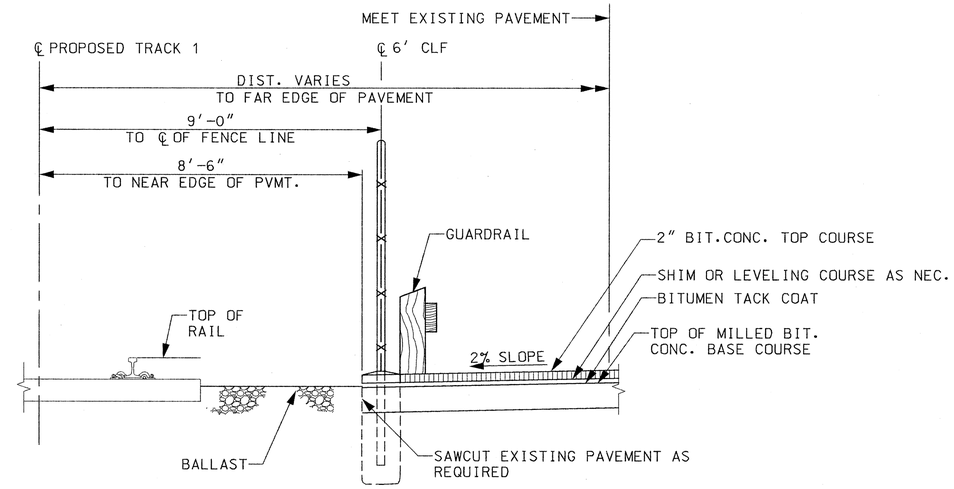

TYPICAL SECTION AT RAILROAD STREET LOT
N.T.S.

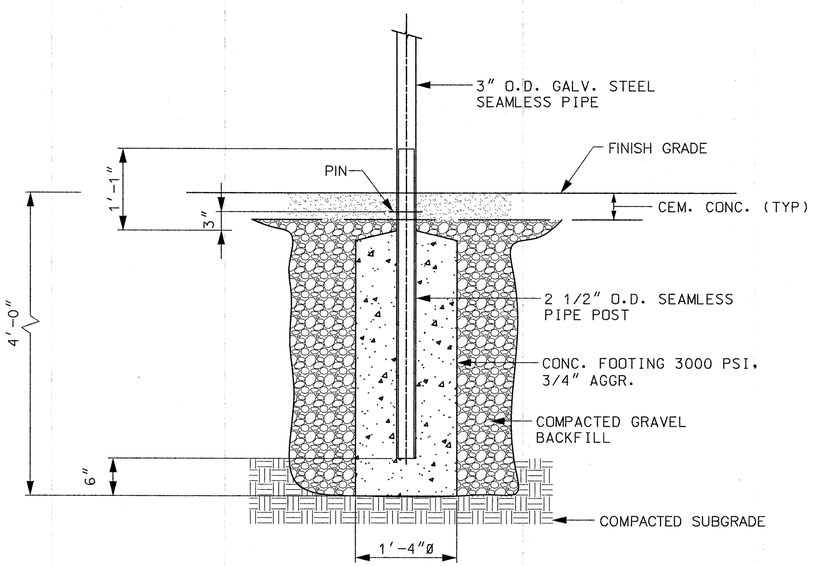

DETAIL A
1" = 1'-0"

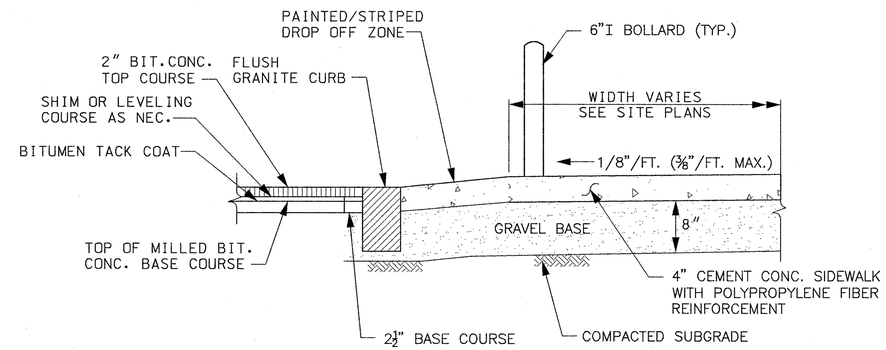

PLAZA SIDEWALK DETAIL AT DROP OFF
N.T.S.

NOTES:

1. PROVIDE CONTROL JOINTS AT 5' O.C. (OR AS OTHERWISE INDICATED OR DIRECTED) AND EXPANSION JOINTS AT 30' O.C. (MAX.).
2. SEE ARCHITECTURAL PLANS AND SITE PLANS FOR LOCATIONS.

COMMONWEALTH OF MASSACHUSETTS
JONATHAN P. BRUNEAU
CIVIL
No. 46035
REGISTERED PROFESSIONAL ENGINEER
5-21-12

MASSACHUSETTS BAY TRANSPORTATION AUTHORITY
FITCHBURG COMMUTER RAIL LINE
IMPROVEMENT PROJECT
CONTRACT NO. G67CN01

SOUTH ACTON STATION
SITE DETAILS
SHEET 4 OF 4

ISSUE	DATE	DESCRIPTION	BY	CHKD.	APP.

HNTB
300 APOLLO DRIVE
CHELMSFORD, MA 01824
(978) 905-4000
PROJECT MANAGER 5/28/12 Date

MASSACHUSETTS BAY TRANSPORTATION AUTHORITY
APPROVED BY:
PROJECT MANAGER 6/30/12 Date

JACOBS
343 CONGRESS STREET
BOSTON, MA 02110
(617) 242-9222

HORIZ: N/A	DES. BY	DR. BY	CHK. BY	PLAN NO. 168543	ISSUE
VERT: NONE	JPB	CWB	JM		
DATE: 5/17/12				SHEET C-33	

FILE NAME: P:\MBTA\2008\E2X37800\CAD\700CADD\702STATIONS\South Acton\Civil\PS&E\ C-33 Site Details Sheet 4 of 4.dwg
PLOT DATE: May 21, 2012 – 1:40pm

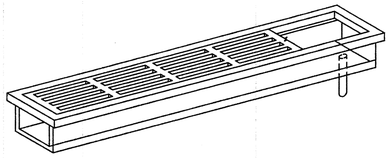

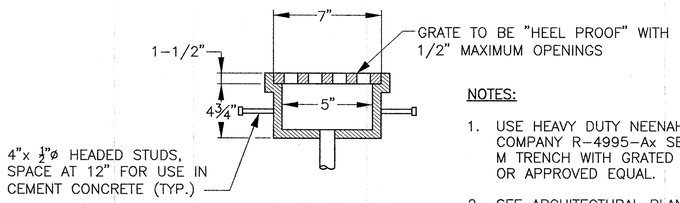

CROSS SECTION

NOTES:

1. USE HEAVY DUTY NEENAH FOUNDRY COMPANY R-4995-Ax SERIES TYPE M TRENCH WITH GRATED COVER, OR APPROVED EQUAL.
2. SEE ARCHITECTURAL PLANS FOR LOCATIONS.

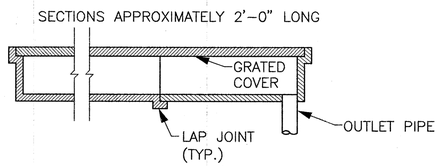

LONGITUDINAL SECTION

TRENCH DRAIN WITH GRATED COVER

N.T.S.

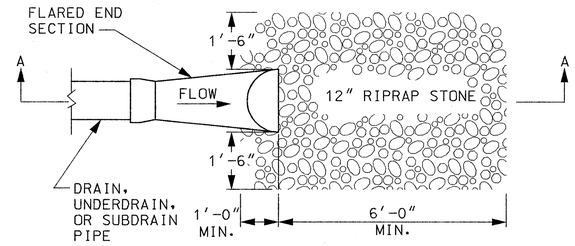

PLAN

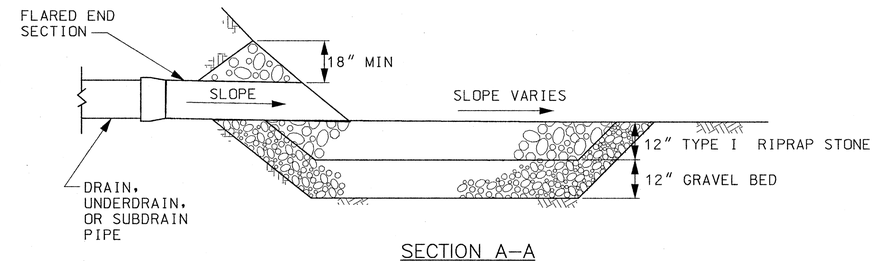

SECTION A-A

FLARED END PIPE RIPRAP DETAIL

N.T.S.

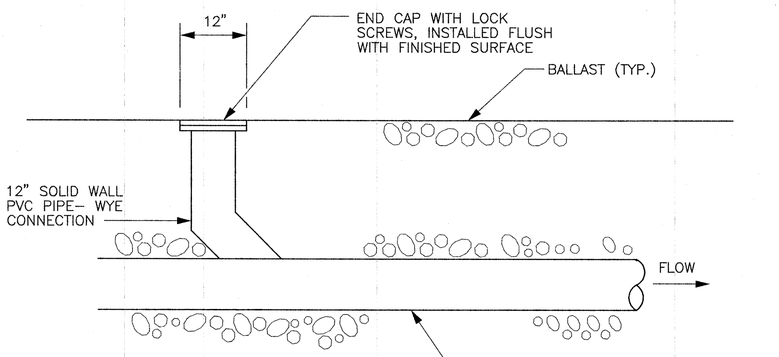

NOTE:

1. CLEAN OUT LOCATIONS SHOWN ON SITE PLANS AND DRAINAGE & GRADING PLANS.

UNDERDRAIN CLEAN OUT DETAIL

N.T.S.

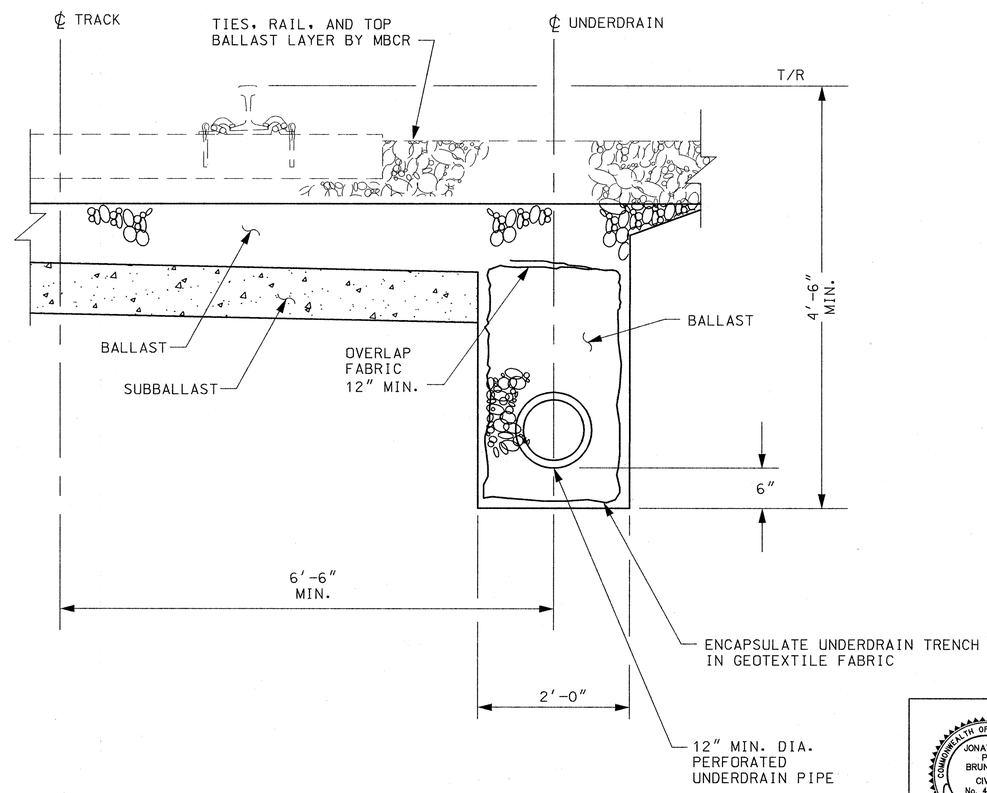

TYPICAL UNDERDRAIN DETAIL

N.T.S.

COMMONWEALTH OF MASSACHUSETTS
JONATHAN P. BRUNEAU
CIVIL
No. 46035
REGISTERED PROFESSIONAL ENGINEER
5-21-12

MASSACHUSETTS BAY TRANSPORTATION AUTHORITY

FITCHBURG COMMUTER RAIL LINE
IMPROVEMENT PROJECT
CONTRACT NO. G67CN01

SOUTH ACTON STATION
DRAINAGE DETAILS
SHEET 1 OF 3

ISSUE	DATE	DESCRIPTION	BY	CHKD.	APP.

HNTB
300 APOLLO DRIVE
CHELMSFORD, MA 01824
(978) 905-4000

PROJECT MANAGER — Date 5/30/12

MASSACHUSETTS BAY TRANSPORTATION AUTHORITY
APPROVED BY:
PROJECT MANAGER — Date 6/30/12

JACOBS
343 CONGRESS STREET
BOSTON, MA 02110
(617) 242-9222

HORIZ: N/A	DES. BY	DR. BY	CHK. BY	PLAN NO. 168544	ISSUE
VERT: NONE	JPB	CWB	JM		
DATE: 5/17/12				SHEET C-34	

FILE NAME: P:\MBTA\2008\E2X37800\CAD\700CADD\702STATIONS\South Acton\Civil\PS&E\ C-34 thru C-36 Drainage Details Sheet.dwg
PLOT DATE: May 21, 2012 - 1:46pm

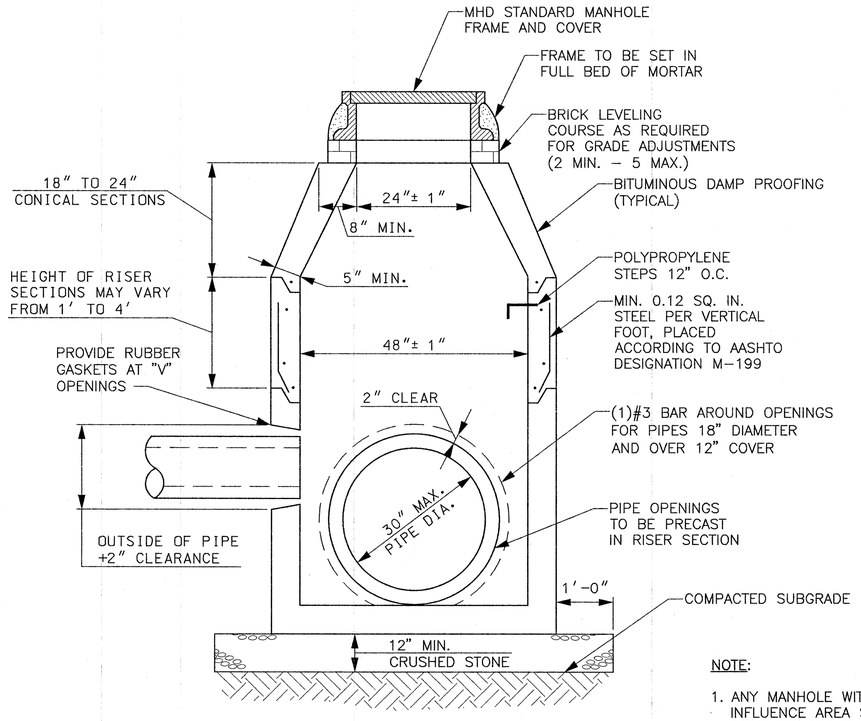

PRECAST CONCRETE DRAIN MANHOLE

9 FEET OR LESS IN DEPTH
N.T.S.

NOTE:

1. ANY MANHOLE WITHIN TRACK INFLUENCE AREA SHALL BE DESIGNED FOR E-80 LOADING.

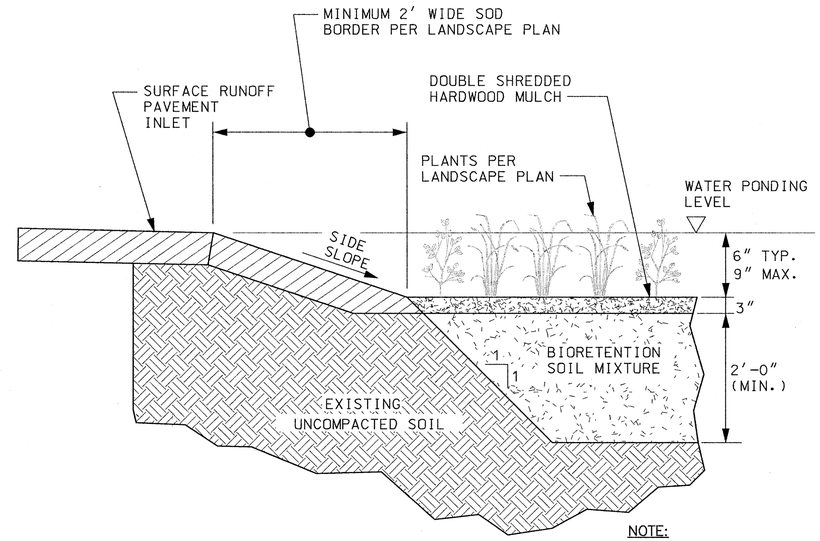

BIORETENTION BASIN

N.T.S.

NOTE:

1. 12" DIAM. PIPES FROM CB'S @ DROP OFF AREA DRAIN INTO BIORETENTION BASIN, SEE SITE PLANS.

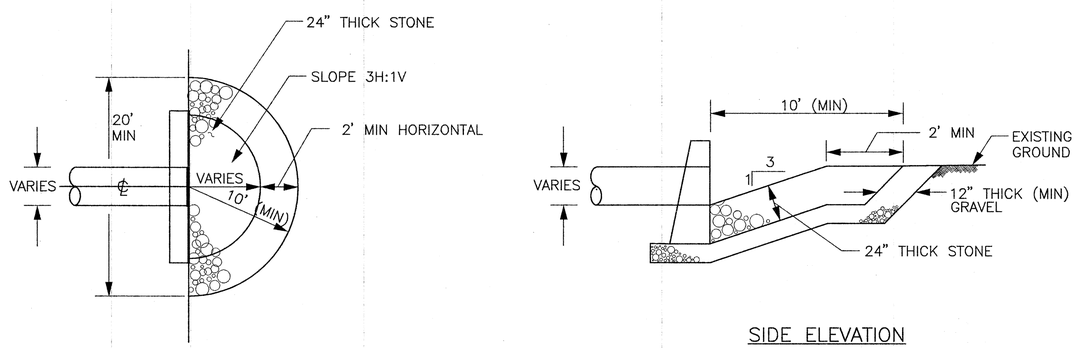

PLAN

SIDE ELEVATION

RIPRAP INLET PROTECTION

N.T.S.

ISSUE	DATE	DESCRIPTION	BY	CHKD.	APP.

COMMONWEALTH OF MASSACHUSETTS — JONATHAN P. BRUNEAU — CIVIL — No. 46035 — REGISTERED PROFESSIONAL ENGINEER — 5-21-12

MASSACHUSETTS BAY TRANSPORTATION AUTHORITY

FITCHBURG COMMUTER RAIL LINE
IMPROVEMENT PROJECT
CONTRACT NO. G67CN01

SOUTH ACTON STATION DRAINAGE DETAILS SHEET 2 OF 3

HNTB — 300 APOLLO DRIVE, CHELMSFORD, MA 01824, (978) 905-4000

PROJECT MANAGER — Date 5/18/12

MASSACHUSETTS BAY TRANSPORTATION AUTHORITY — APPROVED, BY: — PROJECT MANAGER — Date 6/30/12

JACOBS — 343 CONGRESS STREET, BOSTON, MA 02110, (617) 242-9222

HORIZ: N/A	DES. BY	DR. BY	CHK. BY	PLAN NO. 168545	ISSUE
VERT: NONE	JPB	CWB	JM		
DATE: 5/17/12				SHEET C-35	

FILE NAME: P:\MBTA\2008\E2X37800\CAD\700CADD\702STATIONS\South Acton\Civil\PS&E\ C-34 thru C-36 Drainage Details Sheet.dwg
PLOT DATE: May 21, 2012 – 1:48pm

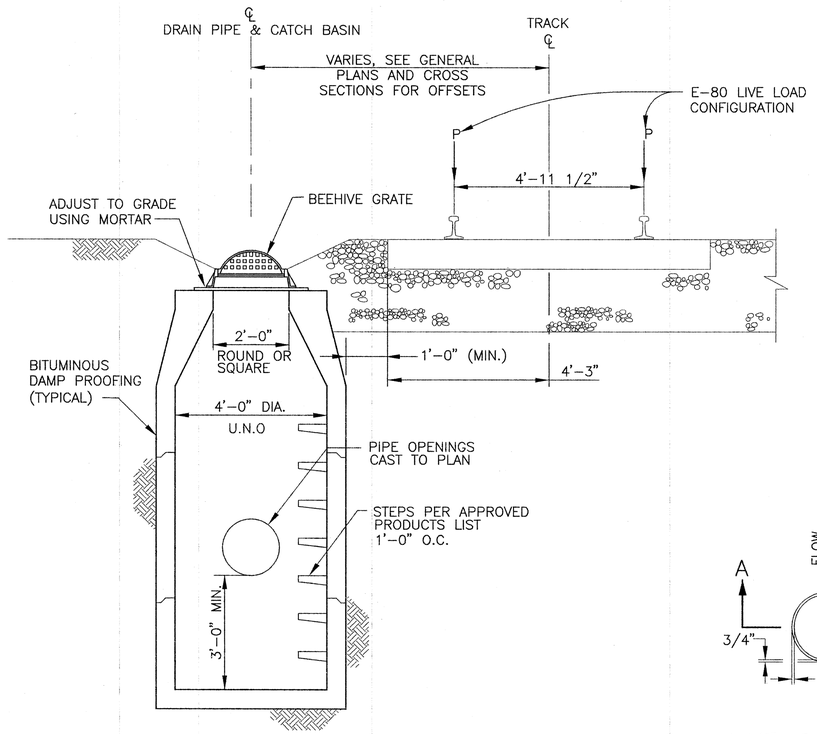

PRECAST CATCH BASIN

NOT TO SCALE

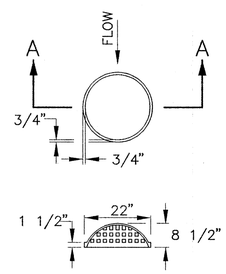

SECTION A–A

NOT TO SCALE

NOTE: MINIMUM WEIGHT – 140 LBS.
MATERIAL – CAST IRON

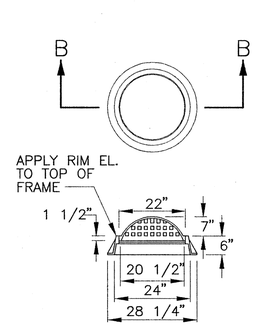

SECTION B–B

NOT TO SCALE

NOTE: MINIMUM WEIGHT – 285 LBS.
MATERIAL – CAST IRON

BEEHIVE GRATE WITH FRAME

NOT TO SCALE

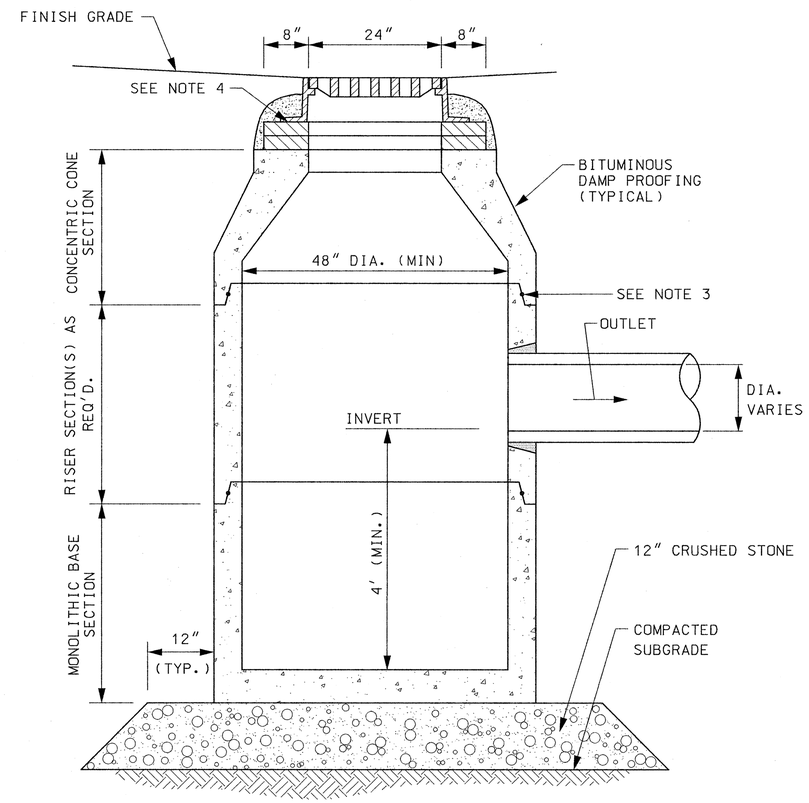

CATCH BASIN (CB)

N.T.S

NOTES:

1. ALL SECTIONS SHALL BE DESIGNED FOR HS–20 LOADING.
2. PROVIDE "V" KNOCKOUTS FOR PIPES WITH 2" MAX. CLEARANCE TO OUTSIDE OF PIPE. MORTAR ALL PIPE CONNECTIONS OR PROVIDE RUBBER GASKETS.
3. JOINT SEALANT BETWEEN PRECAST SECTIONS SHALL BE PREFORMED BUTYL RUBBER.
4. CATCH BASIN FRAME AND GRATE SHALL BE SET IN FULL MORTAR BED. ADJUST TO GRADE WITH CLAY BRICK AND MORTAR (2 BRICK COURSES TYPICALLY, 5 BRICK COURSES MAXIMUM)

COMMONWEALTH OF MASSACHUSETTS
JONATHAN P. BRUNEAU
CIVIL
No. 46035
REGISTERED PROFESSIONAL ENGINEER
5-21-12

MASSACHUSETTS BAY TRANSPORTATION AUTHORITY

FITCHBURG COMMUTER RAIL LINE
IMPROVEMENT PROJECT
CONTRACT NO. G67CN01

SOUTH ACTON STATION
DRAINAGE DETAILS
SHEET 3 OF 3

ISSUE	DATE	DESCRIPTION	BY	CHKD.	APP.

HNTB
300 APOLLO DRIVE
CHELMSFORD, MA 01824
(978) 905-4000

PROJECT MANAGER 5/10/12 Date

MASSACHUSETTS BAY TRANSPORTATION AUTHORITY
APPROVED BY: 6/30/12
PROJECT MANAGER Date

JACOBS
343 CONGRESS STREET
BOSTON, MA 02110
(617) 242-9222

HORIZ: N/A
VERT: NONE
DATE: 5/17/12

DES. BY	DR. BY	CHK. BY
JPB	CWB	JM

PLAN NO. 168546
SHEET C–36
ISSUE

FILE NAME: P:\MBTA\2008\E2X37800\CAD\700CADD\702STATIONS\South Acton\Civil\PS&E\ C-34 thru C-36 Drainage Details Sheet.dwg
PLOT DATE: May 21, 2012 – 1:49pm

CONSTRUCTION STAGING NOTES:

1. SEE RIGHT OF WAY AND PROPERTY PLAN FOR PARCEL OWNERSHIP INFORMATION.

2. THE CONTRACTOR SHALL MINIMIZE CONSTRUCTION-RELATED NOISE AND LIGHT FROM AFFECTING ABUTTER PROPERTIES AND SHALL COMPLY WITH LOCAL AND STATE LAWS REGARDING SUCH.

3. CONSTRUCTION-RELATED VEHICULAR ACCESS TO THE STATION SITE SHALL BE TO THE GREATEST EXTENT POSSIBLE, VIA MAPLE STREET AND STOW STREET. THE PORTION OF MAPLE STREET BETWEEN STOW STREET AND MAIN STREET IS ONE WAY AND WILL REMAIN AS SUCH THROUGHOUT CONSTRUCTION.

4. THE INTERSECTION OF MAIN STREET AND MAPLE STREET HAS POOR DRIVER SITE DISTANCE TRAVELING SOUTHBOUND ON MAIN STREET. THE CONTRACTOR SHALL COORDINATE WITH THE ENGINEER, MASSDOT AND THE TOWN OF ACTON POLICE AND HIGHWAY DEPARTMENTS TO OBTAIN AN APPROVED TRAFFIC CONTROL PLAN DURING CONSTRUCTION. THE PLAN SHALL INCLUDE CONSTRUCTION SIGNAGE OR A TEMPORARY SIGNAL TO PROVIDE ACCESS TO THE SITE FOR ALL CONSTRUCTION RELATED TRAFFIC. SUCH PLAN MAY REQUIRE TRAFFIC OFFICERS AT THE MAPLE AND MAIN STREET INTERSECTION.

5. THE CONTRACTOR SHALL USE, TO THE GREATEST EXTENT POSSIBLE, STATE ROUTE 2 AND 27 AS A HAUL ROUTE TO AND FROM THE STATION SITE AND SHALL GET PRIOR APPROVAL FROM THE TOWN OF ACTON FOR ACCESS ROUTES IN THE STATION AREA, OTHER THAN THOSE MENTIONED ABOVE.

6. THE CONSTRUCTION STAGING PLAN HEREIN IS SUGGESTED FOR BIDDING PURPOSES ONLY. THE CONTRACTOR SHALL SUBMIT A CONSTRUCTION STAGING PLAN FOR PRIOR APPROVAL BY THE ENGINEER. SUCH PLAN SHALL BE COMPLIANT WITH MBTA, TOWN AND STATE REQUIREMENTS AND ADDRESS ALL PROVISIONS OF THE STAGING PLAN. SUCH PLAN SHALL PROVIDE FOR A SAFE AND SECURE SITE AT ALL TIMES THROUGHOUT CONSTRUCTION INCLUDING CONSTRUCTION FENCING, GATES AND SNOW AND ICE REMOVAL. THE CONTRACTOR'S PLAN SHALL ALSO ADDRESS TEMPORARY SIGNAGE AND HOW TOWN PARKING, DROP OFF AREAS AND COMMUTER RAIL OPERATIONS AS WELL AS ACCESS TO ABUTTING RESIDENTIAL AND BUSINESS PROPERTIES WILL BE MAINTAINED AT ALL TIMES DURING CONSTRUCTION.

7. CONTRACTOR SHALL MAINTAIN ACCESS TO OR RELOCATE AS NECESSARY TOWN OWNED BIKE LOCKERS FROM MAIN PARKING LOT PLATFORM AREA AS DIRECTED BY THE ENGINEER. CONTRACTOR SHALL PROVIDE TEMPORARY BIKE RACKS DURING CONSTRUCTION CAPABLE OF HOLDING UP TO 30 BIKES. COORDINATE BIKE LOCKER REMOVAL/RELOCATION WITH TOWN PLANNING DEPARTMENT.

8. AS REQUIRED THE CONTRACTOR SHALL PROVIDE A SAFE, FREQUENT, CONVENIENT AND CLEAN STATION SHUTTLE SERVICE TO AND FROM A TEMPORARY REMOTE REPLACEMENT PARKING LOT THROUGHOUT CONSTRUCTION. REDUCTION OF STATION PARKING CAPACITY SHALL DETERMINE REMOTE PARKING LOT AND SHUTTLE BUS SIZING AND FREQUENCY. THE CONTRACTOR SHALL PROVIDE AT THE REMOTE REPLACEMENT PARKING LOT A MINIMUM OF A ONE-FOR-ONE PARKING CAPACITY REPLACEMENT FOR EACH SPACE REMOVED FROM OPERATIONS AT THE SOUTH ACTON STATION AND SHALL PROVIDE SUFFICIENT SHUTTLE CAPACITY TO TRANSPORT THE COMMUTER RAIL PATRONS WITHOUT DELAY TO MEET THE SCHEDULED TRAIN ARRIVALS AND DEPARTURES. THE SHUTTLE SERVICE WILL DELIVER THESE REMOTE PARKERS TO THE DROP OFF AREA NEAREST THE OPERATIONAL PLATFORM. CONTRACTOR SHALL COORDINATE WITH AND UTILIZE TO THE EXTENT POSSIBLE THE EXISTING TOWN SHUTTLE SERVICE.

9. CONTRACTOR SHALL COVER OR REMOVE AND STORE ALL PLATFORM AREA SIGNS AFFECTED OR DISTURBED BY THE CONSTRUCTION AS DIRECTED BY THE ENGINEER.

10. THE CONTRACTOR SHALL REUSE (REMOVE & RESET) EXISTING SITE SIGNS AS NECESSARY TO STAGE THE WORK AS APPROVED BY THE ENGINEER. SUCH REUSE SHALL BE DEFINED IN THE CONTRACTORS CONSTRUCTION STAGING PLAN AND APPROVED BY THE ENGINEER.

11. ALL SIGNS AND SITE AMENITIES THAT ARE REMOVED FOR CONSTRUCTION ACTIVITIES AND ARE NOT UTILIZED TO STAGE CONSTRUCTION SHALL BE REMOVED AND SECURELY STORED IN A WEATHER-PROOF FACILITY, IF POSSIBLE. UPON CONSTRUCTION COMPLETION, SIGNS AND AMENITIES NOT REUSED AT THE SITE SHALL BE DELIVERED EITHER TO THE TOWN, TO THE MBTA OR DISCARDED AS APPROVED BY THE ENGINEER.

12. PRIOR TO ANY CLEARING AND GRUBBING OPERATIONS AT AND AROUND THE CONSTRUCTION STAGING AREAS, THE CONTRACTOR SHALL BE GRANTED APPROVAL OF SPECIFIC LIMITS BY THE ENGINEER.

13. REMOVE AND STOCKPILE LOAM FROM AREA OF WORK ONLY AS NEEDED FOR CONSTRUCTION ACTIVITIES AND AS APPROVED BY THE ENGINEER.

14. COORDINATE ALL WORK BY OTHERS (TRACK, SIGNAL AND COMMUNICATIONS IMPROVEMENTS) ADJACENT TO OPERATING TRACKS WITH MBTA RAILROAD OPERATIONS AND MBCR.

COMMONWEALTH OF MASSACHUSETTS
JONATHAN P. BRUNEAU
CIVIL
No. 46035
REGISTERED PROFESSIONAL ENGINEER
5-21-12

MASSACHUSETTS BAY TRANSPORTATION AUTHORITY

FITCHBURG COMMUTER RAIL LINE
IMPROVEMENT PROJECT
CONTRACT NO. G67CN01

SOUTH ACTON STATION
CONSTRUCTION STAGING NOTES

ISSUE	DATE	DESCRIPTION	BY	CHKD.	APP.

HNTB
300 APOLLO DRIVE
CHELMSFORD, MA 01824
(978) 905-4000

PROJECT MANAGER 5/21/12 Date

MASSACHUSETTS BAY TRANSPORTATION AUTHORITY
APPROVED BY:
PROJECT MANAGER 6/30/12 Date

JACOBS
343 CONGRESS STREET
BOSTON, MA 02110
(617) 242-9222

HORIZ: NONE	DES. BY	DR. BY	CHK. BY
VERT: NONE	JPB	KMB	JM
DATE: 5/17/12			

PLAN NO. 168550
SHEET C-40
ISSUE

FILE NAME: P:\MBTA\2008\E2X378001\CAD\700CADD\702STATIONS\South Acton\Civil\PS&E\ C-40 Const Staging Notes.dwg
PLOT DATE: May 21, 2012 - 1:52pm

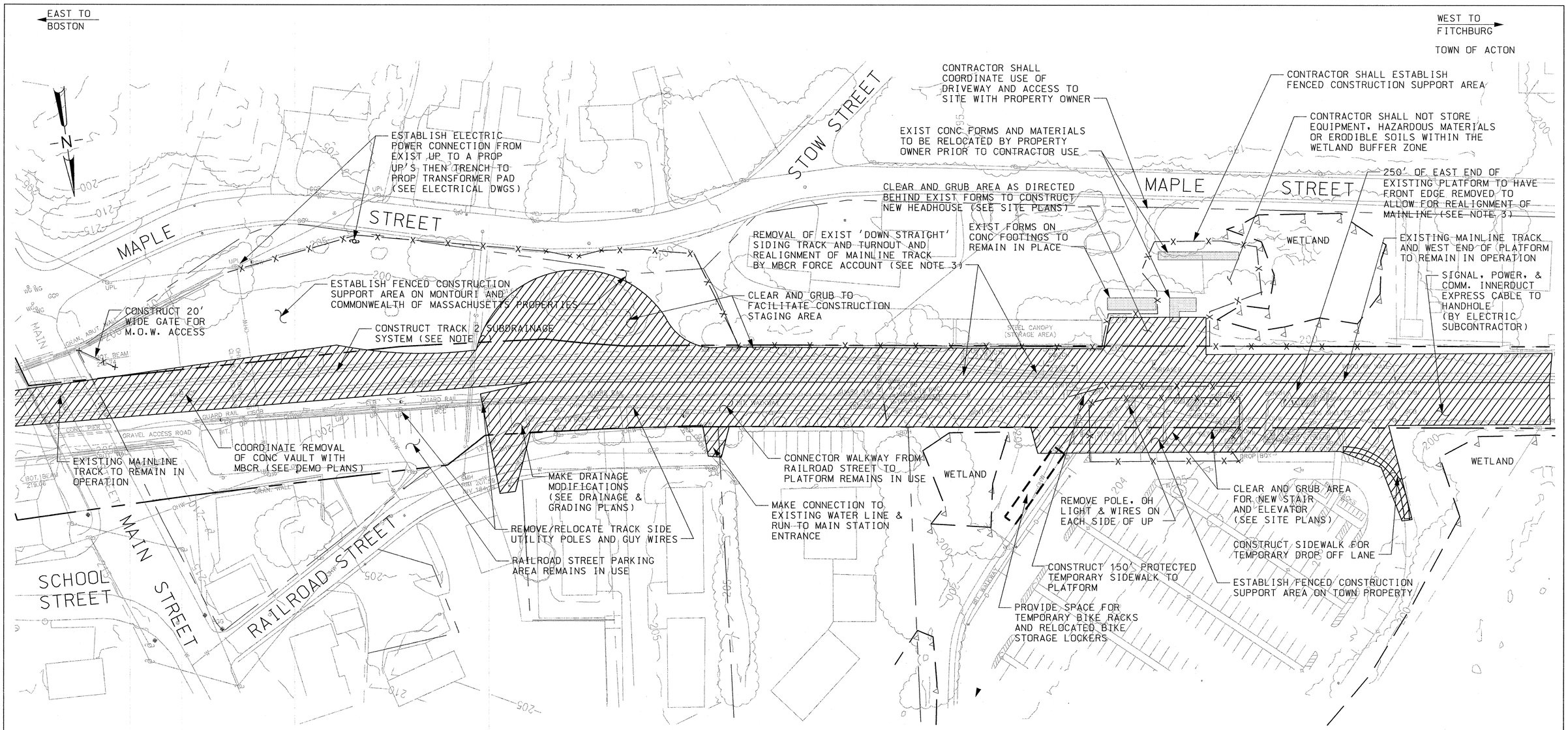

PLAN - PHASE 1

NOTES:

1. FOR CONSTRUCTION STAGING NOTES SEE SHEET C-40.
2. UNDERDRAIN ON SOUTHSIDE TO BE INSTALLED ONCE SIDING TRACK IS REMOVED AND AFTER MAINLINE TRACK REALIGNMENT AND PROFILING IS COMPLETE.
3. MAINLINE TRACK TO BE REALIGNED INTO FINAL LOCATION BY MBCR FORCE ACCOUNT. CONTRACTOR SHALL COORDINATE AS NEC. WITH MBCR TO FACILITATE HIS WORK.
4. CONTRACTOR SHALL COORDINATE WITH PROPERTY OWNERS REGARDING ANY USE OR ACCESS OVER PRIVATE PROPERTY.

PREPARE CONSTRUCTION SUPPORT AREAS AND TEMPORARY FACILITIES, CLEAR THE SITE, AND RELOCATE & RECONSTRUCT AFFECTED UTILITIES.

LEGEND:

WORK UNDER CONSTRUCTION

HORIZ 40 0 40 80

(SCALE IN FEET)

COMMONWEALTH OF MASSACHUSETTS JONATHAN P. BRUNEAU CIVIL No. 46035 REGISTERED PROFESSIONAL ENGINEER 5-21-12

MASSACHUSETTS BAY TRANSPORTATION AUTHORITY

FITCHBURG COMMUTER RAIL LINE IMPROVEMENT PROJECT CONTRACT NO. G67CN01

SOUTH ACTON STATION CONSTRUCTION STAGING PLAN PHASE 1

ISSUE	DATE	DESCRIPTION	BY	CHKD.	APP.

HNTB 300 APOLLO DRIVE CHELMSFORD, MA 01824 (978) 905-4000

PROJECT MANAGER 5/30/12 Date

MASSACHUSETTS BAY TRANSPORTATION AUTHORITY APPROVED BY: PROJECT MANAGER 6/20/12 Date

JACOBS 343 CONGRESS STREET BOSTON, MA 02110 (617) 242-9222

HORIZ: AS SHOWN	DES. BY	DR. BY	CHK. BY	PLAN NO. 168551	ISSUE
VERT: NONE	JPB	KMB	JM		
DATE: 5/17/12				SHEET C-41	

FILE NAME: P:\MBTA\2008\E2X37800\CAD\700CADD\702STATIONS\South Acton\Civil\PS&E\ C-41 Const Staging Plan Phs1.dwg
PLOT DATE: May 21, 2012 - 2:58pm

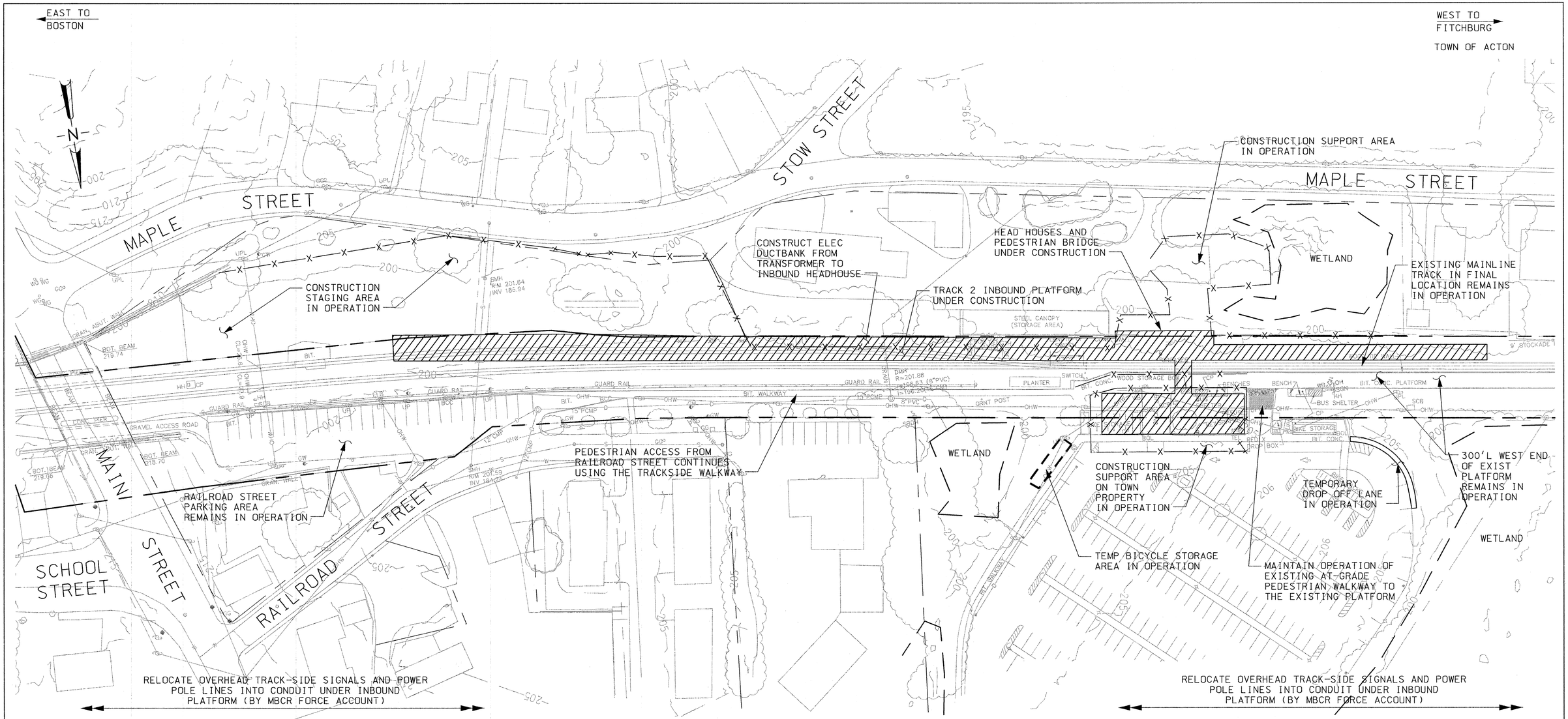

PLAN – PHASE 2

CONSTRUCT THE INBOUND PLATFORM, BOTH ELEVATOR AND STAIR HEADHOUSES, AND OVERHEAD BRIDGE WHILE EXISTING PLATFORM REMAINS IN OPERATION.

NOTES:

1. FOR CONSTRUCTION STAGING NOTES SEE SHEET C-40.
2. THERE IS NO PEDESTRIAN ACCESS FROM MAPLE STREET. STATION USERS MUST CROSS OVER THE MAIN STREET BRIDGE TO ACCESS THE EXISTING PLATFORM VIA RAILROAD STREET.

LEGEND:

WORK UNDER CONSTRUCTION

HORIZ 40 0 40 80

(SCALE IN FEET)

COMMONWEALTH OF MASSACHUSETTS JONATHAN P. BRUNEAU CIVIL No. 46035 REGISTERED PROFESSIONAL ENGINEER

5-21-12

ISSUE	DATE	DESCRIPTION	BY	CHKD.	APP.

JACOBS 343 CONGRESS STREET BOSTON, MA 02110 (617) 242-9222

MASSACHUSETTS BAY TRANSPORTATION AUTHORITY

FITCHBURG COMMUTER RAIL LINE IMPROVEMENT PROJECT CONTRACT NO. G67CN01

SOUTH ACTON STATION CONSTRUCTION STAGING PLAN PHASE 2

HNTB 300 APOLLO DRIVE CHELMSFORD, MA 01824 (978) 905-4000

PROJECT MANAGER 5/21/12 Date

MASSACHUSETTS BAY TRANSPORTATION AUTHORITY

APPROVED BY: PROJECT MANAGER 6/30/12 Date

HORIZ: AS SHOWN	DES. BY	DR. BY	CHK. BY	PLAN NO. 168552	ISSUE
VERT: NONE	JPB	KMB	JM		
DATE: 5/17/12				SHEET C-42	

FILE NAME: P:\MBTA\2008\E2X37800\CAD\700CADD\702STATIONS\South Acton\Civil\PS&E\ C-42 Const Staging Plan Phs2.dwg
PLOT DATE: May 21, 2012 – 3:06pm

EAST TO BOSTON

WEST TO FITCHBURG

TOWN OF ACTON

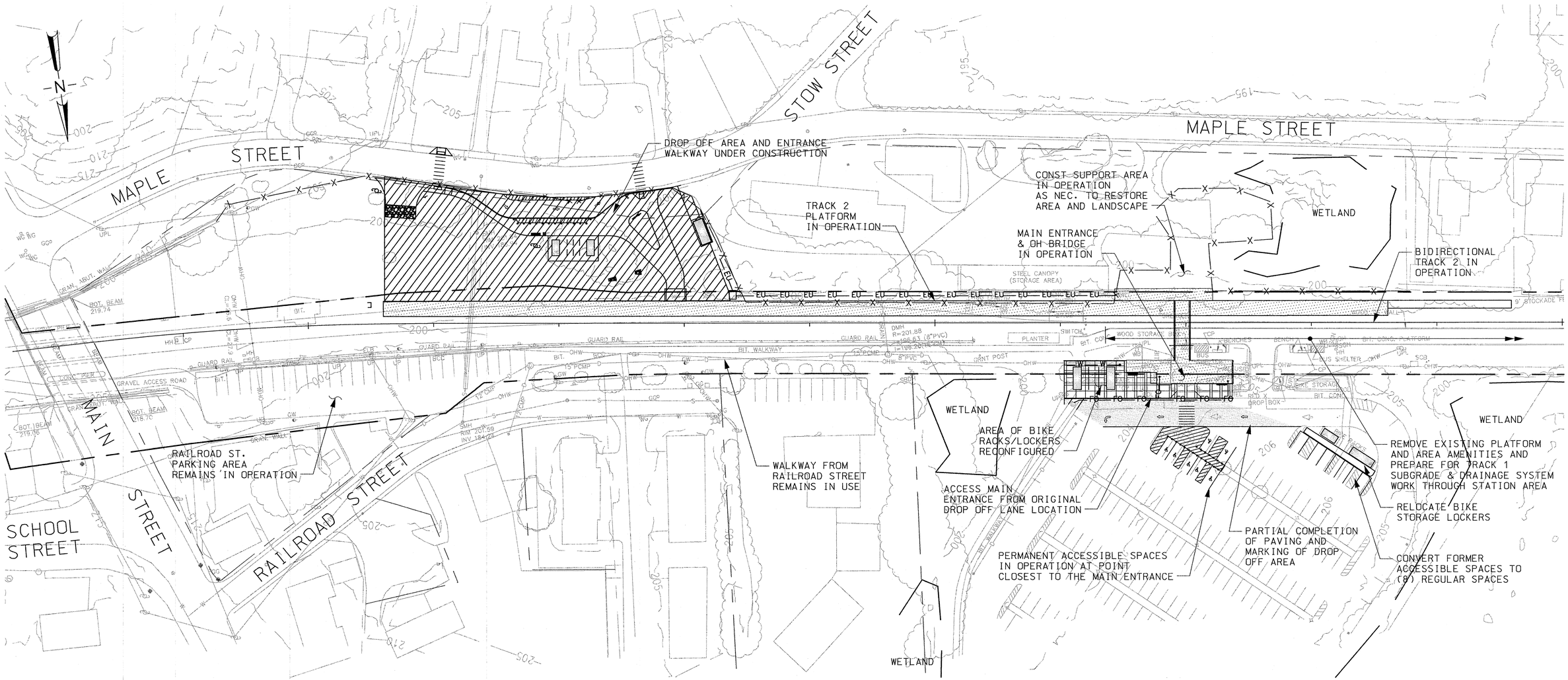

PLAN - PHASE 3

COMPLETE AND OPEN MAIN ENTRANCE TO NEW INBOUND PLATFORM VIA OVERHEAD BRIDGE, STAIRS, AND ELEVATORS. COMPLETE ACCESS FROM MAPLE STREET.

NOTES:

1. FOR CONSTRUCTION STAGING NOTES SEE SHEET C-40.
2. THERE IS NO PEDESTRIAN ACCESS FROM MAPLE STREET. STATION USERS MUST CROSS OVER THE MAIN STREET BRIDGE TO ACCESS THE EXISTING PLATFORM FROM RAILROAD STREET.
3. A MINIMUM OF 5 ACCESSIBLE SPACES SHALL REMAIN IN OPERATION AT ALL TIMES.

LEGEND:

WORK UNDER CONSTRUCTION

HORIZ 40 0 40 80

(SCALE IN FEET)

COMMONWEALTH OF MASSACHUSETTS JONATHAN P. BRUNEAU CIVIL No. 46035 REGISTERED PROFESSIONAL ENGINEER 5-21-12

MASSACHUSETTS BAY TRANSPORTATION AUTHORITY

FITCHBURG COMMUTER RAIL LINE IMPROVEMENT PROJECT CONTRACT NO. G67CN01

SOUTH ACTON STATION CONSTRUCTION STAGING PLAN PHASE 3

ISSUE	DATE	DESCRIPTION	BY	CHKD.	APP.

HNTB 300 APOLLO DRIVE CHELMSFORD, MA 01824 (978) 905-4000

PROJECT MANAGER 5/30/12 Date

MASSACHUSETTS BAY TRANSPORTATION AUTHORITY APPROVED BY: PROJECT MANAGER 6/30/12 Date

JACOBS 343 CONGRESS STREET BOSTON, MA 02110 (617) 242-9222

HORIZ: AS SHOWN	DES. BY	DR. BY	CHK. BY	PLAN NO. 168553	ISSUE
VERT: NONE	JPB	KMB	JM		
DATE: 5/17/12				SHEET C-43	

FILE NAME: P:\MBTA\2008\E2X37800\CAD\700CADD\702STATIONS\South Acton\Civil\PS&E\ C-43 Const Staging Plan Phs3.dwg
PLOT DATE: May 21, 2012 - 3:47pm

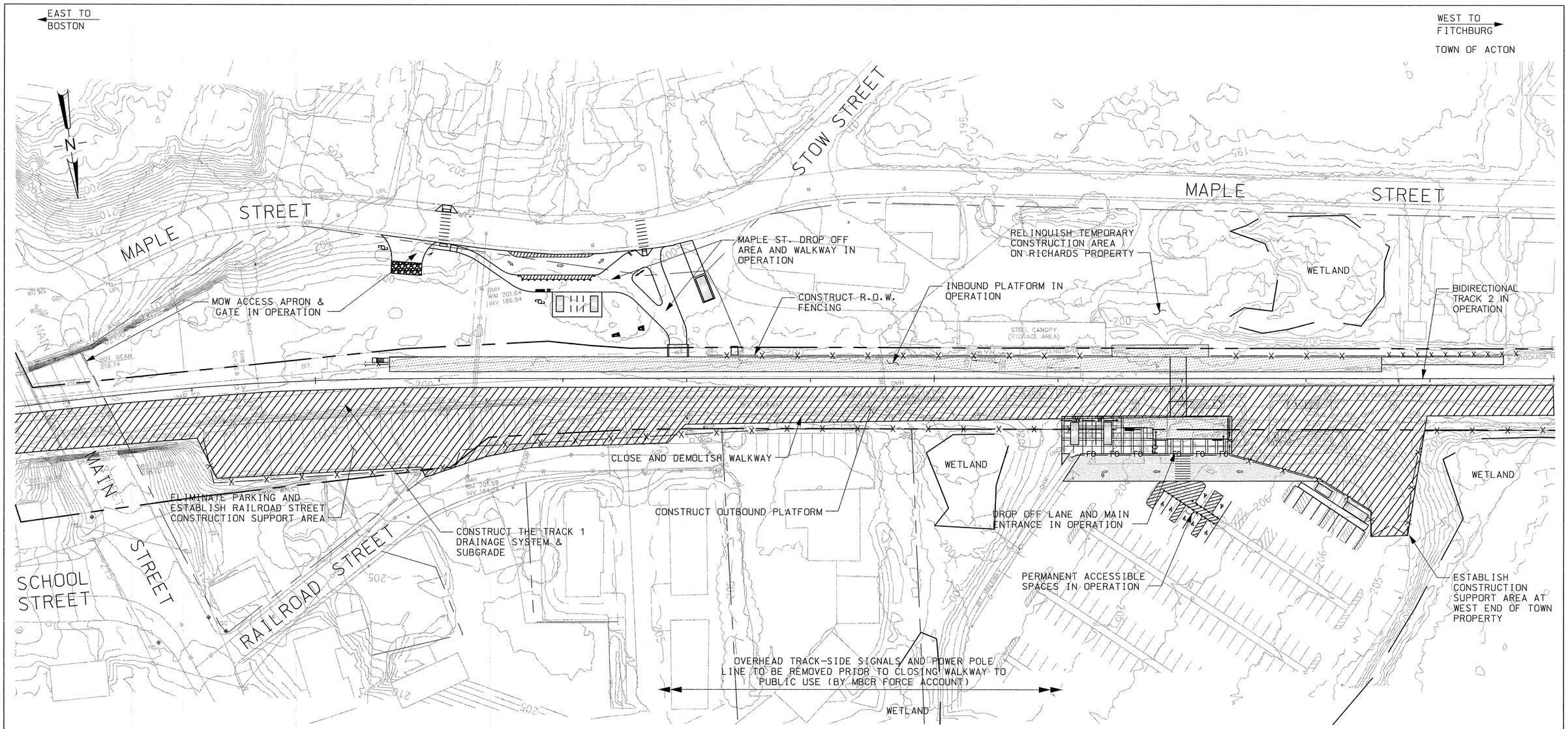

PLAN – PHASE 4

OPEN MAPLE STREET ENTRANCE. CLOSE RAILROAD STREET LOT AND CONNECTOR WALKWAY AND CONSTRUCT TRACK 1 DRAINAGE AND SUBGRADE, OUTBOUND PLATFORM, WALKWAYS, AND RAMPS.

NOTES:

1. FOR CONSTRUCTION STAGING NOTES SEE SHEET C-40.
2. THERE IS NO PEDESTRIAN ACCESS FROM RAILROAD STREET DURING THIS PHASE. STATION USERS MUST USE THE MAPLE ST. ENTRANCE OR THE PEDESTRIAN BRIDGE AT THE MAIN ENTRANCE VIA THE CENTRAL STREET PARKING LOT TO ACCESS THE NEW INBOUND PLATFORM.

LEGEND:

WORK UNDER CONSTRUCTION

HORIZ 40 0 40 80

(SCALE IN FEET)

COMMONWEALTH OF MASSACHUSETTS
JONATHAN P. BRUNEAU
CIVIL
No. 46035
REGISTERED PROFESSIONAL ENGINEER
5-21-12

MASSACHUSETTS BAY TRANSPORTATION AUTHORITY

FITCHBURG COMMUTER RAIL LINE
IMPROVEMENT PROJECT
CONTRACT NO. G67CN01

SOUTH ACTON STATION
CONSTRUCTION STAGING PLAN
PHASE 4

ISSUE	DATE	DESCRIPTION	BY	CHKD.	APP.

HNTB
300 APOLLO DRIVE
CHELMSFORD, MA 01824
(978) 905-4000

PROJECT MANAGER Date

MASSACHUSETTS BAY TRANSPORTATION AUTHORITY
APPROVED BY:
PROJECT MANAGER Date 6/30/12

JACOBS
343 CONGRESS STREET
BOSTON, MA 02110
(617) 242-9222

HORIZ: AS SHOWN	DES. BY	DR. BY	CHK. BY	PLAN NO. 168554	ISSUE
VERT: NONE	JPB	KMB	JM		
DATE: 5/17/12				SHEET C-44	

FILE NAME: P:\MBTA\2008\E2X37800\CAD\700CADD\702STATIONS\South Acton\Civil\PS&E\ C-44 Const Staging Plan Phs4.dwg
PLOT DATE: May 21, 2012 – 4:04pm

EAST TO BOSTON

WEST TO FITCHBURG

TOWN OF ACTON

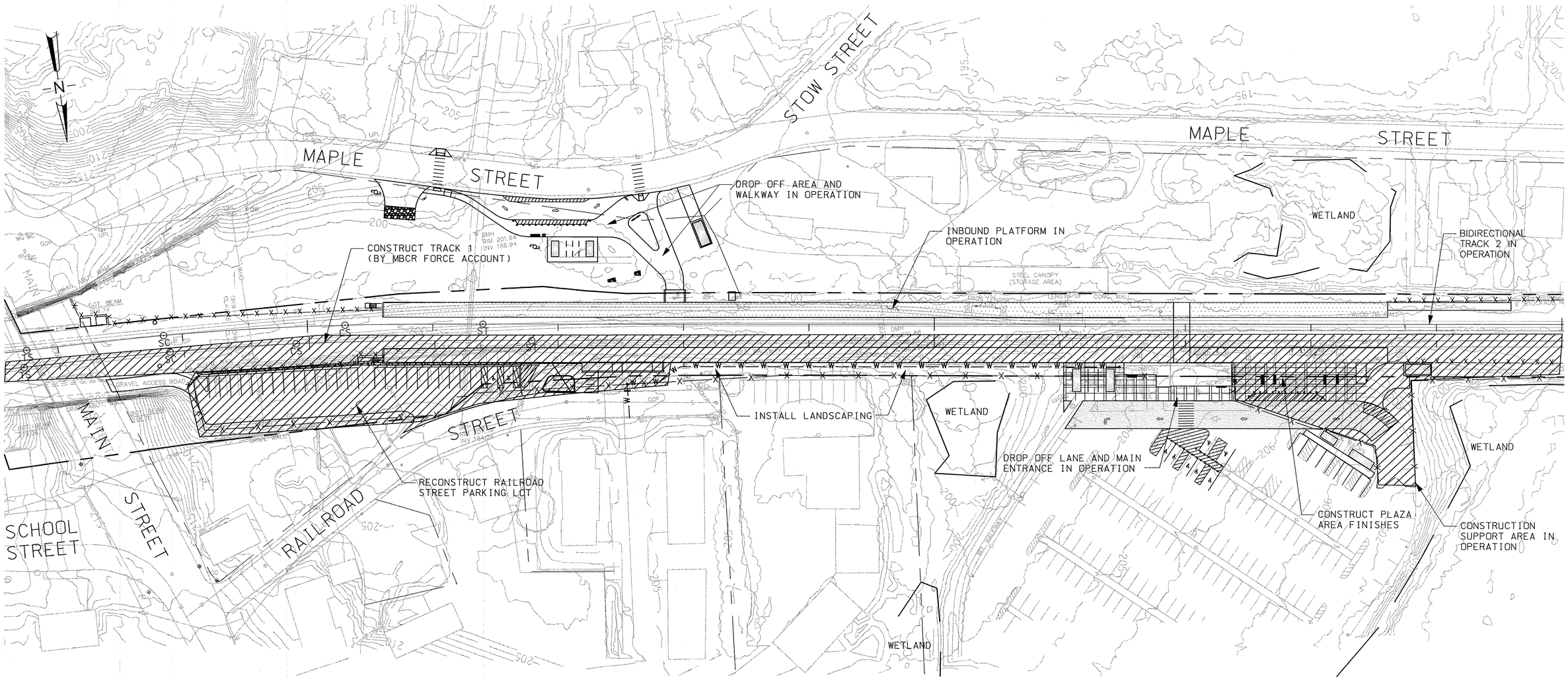

PLAN – PHASE 5

COMPLETE CONSTRUCTION OF RAILROAD STREET PARKING AREA AND TRACK 1 ROADBED CONSTRUCTION AND PERFORM ALL SYSTEMS TESTING. (TRACK 1 INSTALLED BY MBCR FORCE ACCOUNT)

NOTES:

1. FOR CONSTRUCTION STAGING NOTES SEE SHEET C-40.
2. PEDESTRIAN ACCESS IS AVAILABLE FROM MAPLE STREET AND THE MAIN CENTRAL STREET PARKING LOT.

LEGEND:

WORK UNDER CONSTRUCTION

HORIZ 40 0 40 80

(SCALE IN FEET)

COMMONWEALTH OF MASSACHUSETTS JONATHAN P. BRUNEAU CIVIL No. 46035 REGISTERED PROFESSIONAL ENGINEER 5.21.12

ISSUE	DATE	DESCRIPTION	BY	CHKD.	APP.

JACOBS 343 CONGRESS STREET BOSTON, MA 02110 (617) 242-9222

MASSACHUSETTS BAY TRANSPORTATION AUTHORITY

FITCHBURG COMMUTER RAIL LINE IMPROVEMENT PROJECT CONTRACT NO. G67CN01

SOUTH ACTON STATION CONSTRUCTION STAGING PLAN PHASE 5

HNTB 300 APOLLO DRIVE CHELMSFORD, MA 01824 (978) 905-4000

PROJECT MANAGER Date 6/30/12

MASSACHUSETTS BAY TRANSPORTATION AUTHORITY APPROVED BY: PROJECT MANAGER Date 6/30/12

HORIZ: AS SHOWN	DES. BY	DR. BY	CHK. BY	PLAN NO. 168555	ISSUE
VERT: NONE	JPB	KMB	JM		
DATE: 5/17/12				SHEET C-45	

FILE NAME: P:\MBTA\2008\E2X37800\CAD\700CADD\702STATIONS\South Acton\Civil\PS&E\ C-45 Const Staging Plan Phs5.dwg
PLOT DATE: May 21, 2012 – 4:14pm

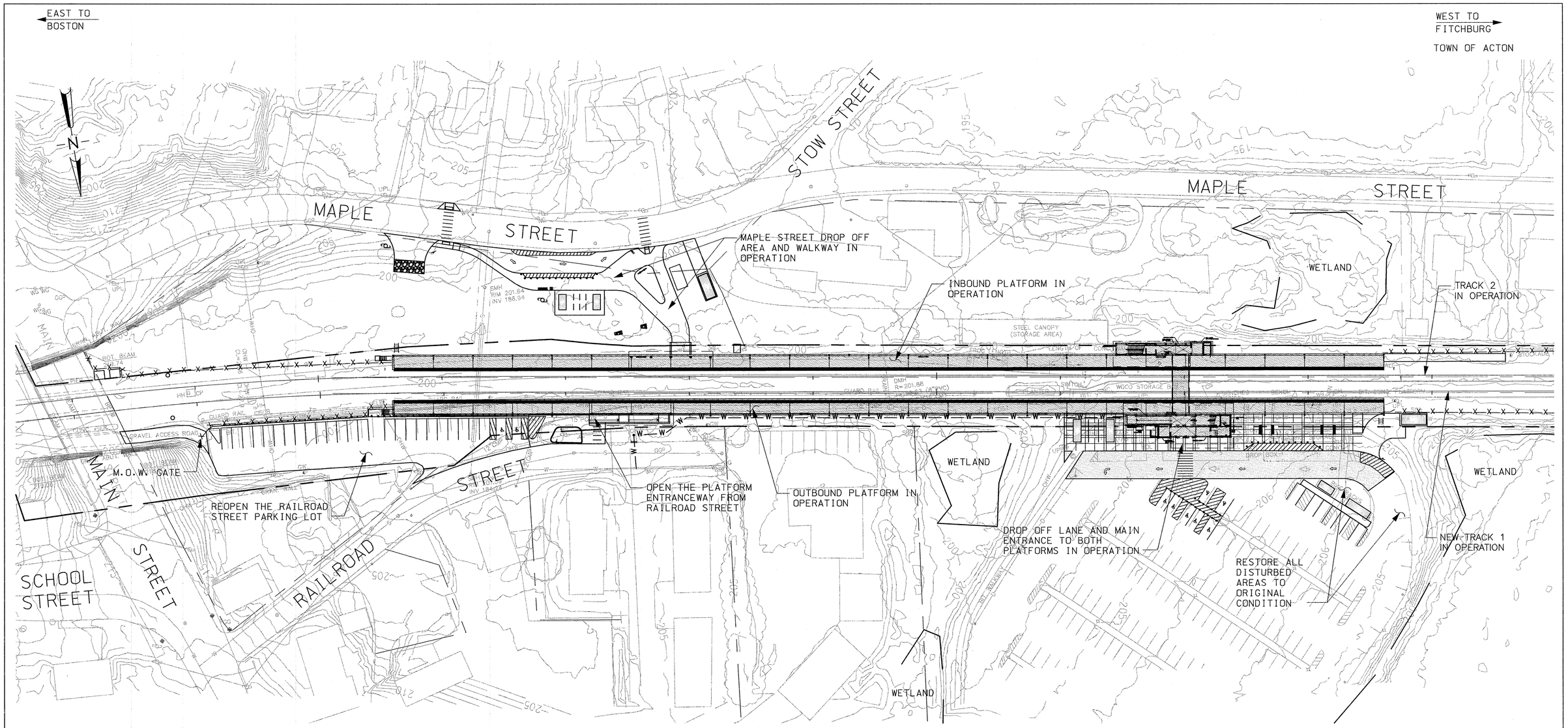

PLAN – PHASE 6

REMOVE ALL CONSTRUCTION RELATED MEASURES AND RESTORE ALL STAGING AND OTHER DISTURBED AREAS TO THEIR ORIGINAL CONDITION.

NOTES:

1. FOR CONSTRUCTION STAGING NOTES SEE SHEET C-40.

LEGEND:

WORK UNDER CONSTRUCTION

HORIZ 40 0 40 80

(SCALE IN FEET)

COMMONWEALTH OF MASSACHUSETTS
JONATHAN P. BRUNEAU
CIVIL
No. 46035
REGISTERED PROFESSIONAL ENGINEER
5-21-12

ISSUE	DATE	DESCRIPTION	BY	CHKD.	APP.

JACOBS
343 CONGRESS STREET
BOSTON, MA 02110
(617) 242-9222

MASSACHUSETTS BAY TRANSPORTATION AUTHORITY

FITCHBURG COMMUTER RAIL LINE
IMPROVEMENT PROJECT
CONTRACT NO. G67CN01

SOUTH ACTON STATION
CONSTRUCTION STAGING PLAN
PHASE 6

HNTB
300 APOLLO DRIVE
CHELMSFORD, MA 01824
(978) 905-4000

PROJECT MANAGER — Date 5/30/12

MASSACHUSETTS BAY TRANSPORTATION AUTHORITY
APPROVED BY:
PROJECT MANAGER — Date 6/30/12

HORIZ: AS SHOWN	DES. BY	DR. BY	CHK. BY	PLAN NO. 168556	ISSUE
VERT: NONE	JPB	KMB	JM		
DATE: 5/17/12				SHEET C-46	

FILE NAME: P:\MBTA\2008\E2X37800\CAD\700CADD\702STATIONS\South Acton\Civil\PS&E\ C-46 Const Staging Plan Phs6.dwg
PLOT DATE: May 21, 2012 – 4:20pm

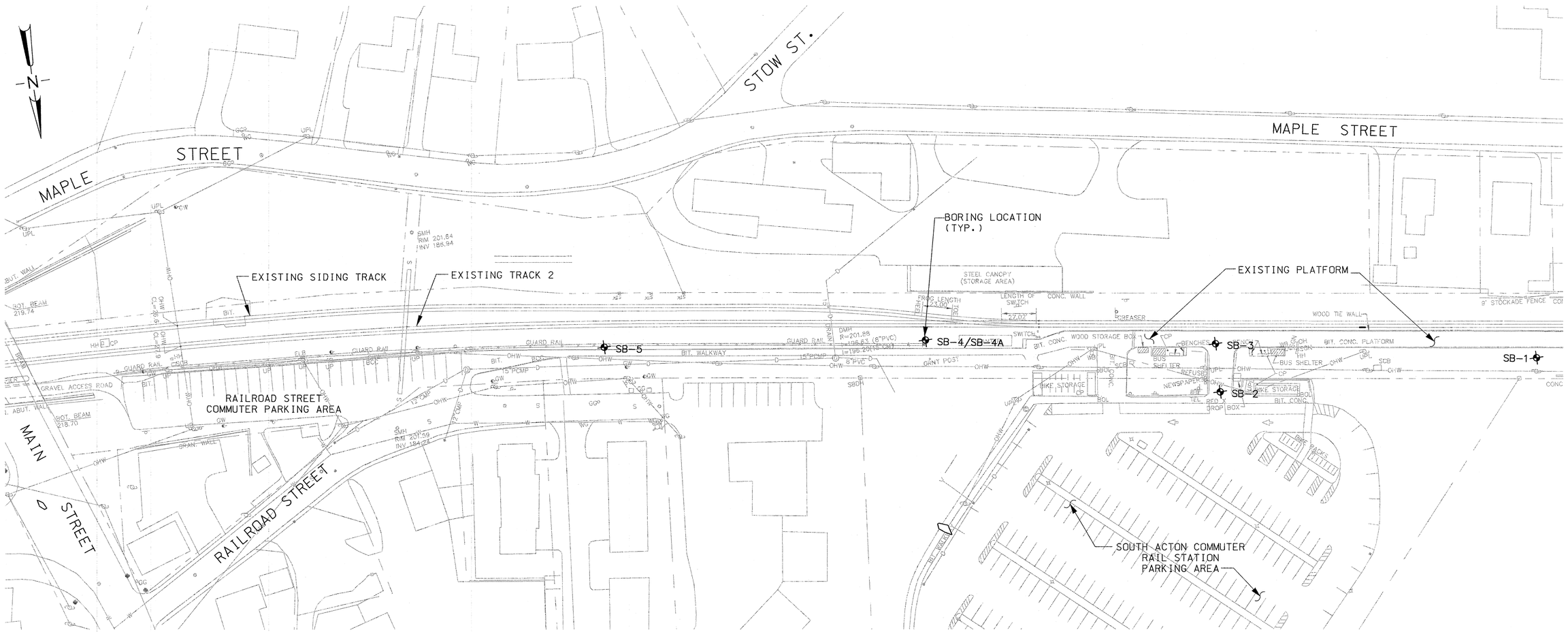

BORING LOCATION PLAN

NOTES:

1. FOR SPECIFIC BORING DATA SEE SHEETS GT-2 AND GT-3.
2. THE INFORMATION SHOWN ON THIS DRAWING CONCERNING TYPE AND LOCATION OF UNDERGROUND UTILITIES IS NOT GUARANTEED TO BE ACCURATE OR ALL INCLUSIVE. THE CONTRACTOR IS RESPONSIBLE FOR MAKING HIS OR HER OWN DETERMINATION AS TO THE TYPE AND LOCATION OF UNDERGROUND UTILITIES AS MAY BE NECESSARY TO AVOID DAMAGES THERETO.

HORIZ. 40 0 40 80

(SCALE IN FEET)

COMMONWEALTH OF MASSACHUSETTS
PAUL J. MURPHY
CIVIL
No. 45695
REGISTERED PROFESSIONAL ENGINEER

MASSACHUSETTS BAY TRANSPORTATION AUTHORITY

FITCHBURG COMMUTER RAIL LINE
IMPROVEMENT PROJECT
CONTRACT NO. G67CN01

SOUTH ACTON STATION
BORING LOCATION PLAN

ISSUE	DATE	DESCRIPTION	BY	CHKD.	APP.

HNTB
300 APOLLO DRIVE
CHELMSFORD, MA 01824
(978) 905-4000

PROJECT MANAGER — Date

MASSACHUSETTS BAY TRANSPORTATION AUTHORITY
APPROVED BY: 6/30/12
PROJECT MANAGER — Date

JACOBS
343 CONGRESS STREET
BOSTON, MA 02110
(617) 242-9222

HORIZ: 1" = 40'	DES. BY	DR. BY	CHK. BY	PLAN NO. 168560	ISSUE
VERT: NONE	AMB	CWB	JAJ		
DATE: 5/17/12				SHEET GT-1	

FILE NAME: P:\MBTA\2008\E2X37800\CAD\700CADD\702STATIONS\South Acton\Geotech\ GT-1 Boring Location Plan.dwg
PLOT DATE: May 15, 2012 - 6:20pm

LOG OF TEST BORING

JACOBS

PROJECT	Fitchburg Line Improvements	BORING NO.	SB-1
LOCATION	South Acton Station		
OWNER	Massachusetts Bay Commuter Rail		
JOB NUMBER	E2X37800		SHEET 1 OF 1

INSPECTOR	A. Barbetta	CONTRACTOR	New Hampshire Boring	DRILLER	D. Dunklee
METHOD OF DRILLING		GROUNDWATER READINGS		DRILL RIG	Diedrich D-90
0	Wash Boring w/ 4" Casing	DATE/TIME	DEPTH(ft) / REMARKS	SPT HAMMER	140 lb Safety
29	Split Spoon Sample	11/6/2008	3 / Upon Completion (In Casing)		
30.4	Spoon Refusal				

ELEVATION	204.6		
DATUM	Datum		
GRID	N	2992854	
COORD	E	667256	
DATE START	11/6/08		
DATE END	11/6/08		

DEPTH (ft)	STRATA SYMBOL	SAMPLE DATA SPT/RQD (%)	SAMPLE NO.	DEPTH (ft)	REC. (in)	ELEV.	FIELD CLASSIFICATION AND REMARKS
		4 5 6 5	SS-1	0 – 2	4		Well graded sand with gravel (SW): mostly medium to coarse sand, little gravel, trace black slag, brown, wet. (FILL)
5		18 9 10 16	SS-2	4 – 6	2	198.6	Well graded sand with gravel (SW): mostly medium to coarse sand, little gravel, trace black slag, trace silt, brown, wet. (FILL)
10		16 4 4 3	SS-3	9 – 11	6		Well graded sand with gravel (SW): mostly med to coarse sand, little gravel, trace silt, trace organics, brown, wet.
15		20 24 16 16	SS-4	14 – 16	16		Poorly graded sand (SP): mostly coarse sand, trace gravel, trace silt, gray, wet.
20		7 20 14 22	SS-5	19 – 21	14		Well graded sand with gravel (SW): mostly fine to coarse sand, little gravel, trace silt, trace clay, gray, wet.
25		17 25 19 18	SS-6	24 – 26	4		Well graded sand with gravel (SW): mostly fine to coarse sand, little gravel, trace silt, gray, wet.
30		63 73 100/5"	SS-7	29 – 30.4	9	174.1	Well graded sand with gravel (SW): mostly fine to coarse sand, little gravel, trace silt, gray, wet.
							Bottom of Hole at 30.4'.
35							

Page 1: 0-35 feet. Each subsequent page displays 40 feet.

COHESIVE SOIL		NON-COHESIVE SOIL		RELATIVE PROPORTIONS OF SOIL COMPONENTS	
BLOWS/FT	CONSISTENCY	BLOWS/FT	DENSITY		
0 – 2	VERY SOFT	0 – 4	VERY LOOSE	< 10%	TRACE
3 – 4	SOFT	5 – 10	LOOSE	15 – 25%	LITTLE
5 – 8	MEDIUM STIFF	11 – 30	MEDIUM DENSE	30 – 45%	SOME
9 – 15	STIFF	31 – 50	DENSE	50 – 100%	MOSTLY
16 – 30	VERY STIFF	51 +	VERY DENSE		
30 +	HARD				

LEGEND: Auger Sample (AS); Rock Core (NC) and RQD (%) REC (%); Split-Spoon Sample (SS) and Blow Counts per 6" REC (N); Undisturbed (U)-Shelby Tube, (P)-Piston; Jar Sample (JS); Bag Sample (B)

BORING NO. SB-1

LOG OF TEST BORING

JACOBS

PROJECT	Fitchburg Line Improvements	BORING NO.	SB-2
LOCATION	South Acton Station		
OWNER	Massachusetts Bay Commuter Rail		
JOB NUMBER	E2X37800		SHEET 1 OF 1

INSPECTOR	A. Barbetta	CONTRACTOR	New Hampshire Boring	DRILLER	D. Dunklee
METHOD OF DRILLING		GROUNDWATER READINGS		DRILL RIG	Diedrich D-90
0	Wash Boring w/ 4" Casing	DATE/TIME	DEPTH(ft) / REMARKS	SPT HAMMER	140 lb Safety
13.5	Spoon Refusal	11/7/2008	4 / Upon Completion (In Casing)		

ELEVATION	205.0		
DATUM	Datum		
GRID	N	2992845	
COORD	E	667502	
DATE START	11/7/08		
DATE END	11/7/08		

DEPTH (ft)	STRATA SYMBOL	SAMPLE DATA SPT/RQD (%)	SAMPLE NO.	DEPTH (ft)	REC. (in)	ELEV.	FIELD CLASSIFICATION AND REMARKS
		8 9 13 16	SS-1	0.33 – 2.33	8		Well graded sand with gravel (SW): mostly med to coarse sand, little gravel, brown, wet. (FILL)
5		15 15 9 9	SS-2	4 – 6	14	199.0	Well graded sand with gravel (SW): mostly med to coarse sand, little gravel, trace silt, brown, wet. (FILL)
10		47 44 45 85	SS-3	9 – 11	12		Well graded sand with gravel (SW): mostly med to coarse sand, little gravel, trace silt, dark brown, wet. (Weathered rock fragments in SPT shoe.) -Casing and rotary bit refusal at 13.5'. Probable Bedrock.
15						191.5	Bottom of Hole at 13.5'.
20							
25							
30							
35							

Page 1: 0-35 feet. Each subsequent page displays 40 feet.

COHESIVE SOIL		NON-COHESIVE SOIL		RELATIVE PROPORTIONS OF SOIL COMPONENTS	
BLOWS/FT	CONSISTENCY	BLOWS/FT	DENSITY		
0 – 2	VERY SOFT	0 – 4	VERY LOOSE	< 10%	TRACE
3 – 4	SOFT	5 – 10	LOOSE	15 – 25%	LITTLE
5 – 8	MEDIUM STIFF	11 – 30	MEDIUM DENSE	30 – 45%	SOME
9 – 15	STIFF	31 – 50	DENSE	50 – 100%	MOSTLY
16 – 30	VERY STIFF	51 +	VERY DENSE		
30 +	HARD				

LEGEND: Auger Sample (AS); Rock Core (NC) and RQD (%) REC (%); Split-Spoon Sample (SS) and Blow Counts per 6" REC (N); Undisturbed (U)-Shelby Tube, (P)-Piston; Jar Sample (JS); Bag Sample (B)

BORING NO. SB-2

LOG OF TEST BORING

JACOBS

PROJECT	Fitchburg Line Improvements	BORING NO.	SB-3
LOCATION	South Acton Station		
OWNER	Massachusetts Bay Commuter Rail		
JOB NUMBER	E2X37800		SHEET 1 OF 1

INSPECTOR	A. Barbetta	CONTRACTOR	New Hampshire Boring	DRILLER	D. Dunklee
METHOD OF DRILLING		GROUNDWATER READINGS		DRILL RIG	Diedrich D-90
0	Wash Boring w/ 4" Casing	DATE/TIME	DEPTH(ft) / REMARKS	SPT HAMMER	140 lb Safety
17	Spoon Refusal	11/10/2008	3 / Upon Completion (In Casing)		

ELEVATION	204.1		
DATUM	Datum		
GRID	N	2992808	
COORD	E	667500	
DATE START	11/10/08		
DATE END	11/10/08		

DEPTH (ft)	STRATA SYMBOL	SAMPLE DATA SPT/RQD (%)	SAMPLE NO.	DEPTH (ft)	REC. (in)	ELEV.	FIELD CLASSIFICATION AND REMARKS
		4 9 10 10	SS-1	0 – 2	17		Well graded sand with gravel (SW): mostly med to coarse sand, little gravel, brown, moist. (FILL)
5		13 9 7 16	SS-2	4 – 6	13	198.1	Well graded sand (SW): mostly med to coarse sand, trace gravel, trace silt, brown/black, wet. (FILL)
10		82 40 29 44	SS-3	9 – 11	15		9-9.2' Well graded gravel (GW): mostly med to coarse gravel. 9.2-10.3' Well graded sand (SW): mostly fine to med sand, trace gravel, trace silt, brown, wet.
15		100/4"	SS-4	14 – 14.3	2		-Weathered rock fragments. Spoon refusal at 14.3'. -Casing and rotary bit refusal at 17'. (Probable Bedrock)
						187.1	Bottom of Hole at 17'.
20							
25							
30							
35							

Page 1: 0-35 feet. Each subsequent page displays 40 feet.

COHESIVE SOIL		NON-COHESIVE SOIL		RELATIVE PROPORTIONS OF SOIL COMPONENTS	
BLOWS/FT	CONSISTENCY	BLOWS/FT	DENSITY		
0 – 2	VERY SOFT	0 – 4	VERY LOOSE	< 10%	TRACE
3 – 4	SOFT	5 – 10	LOOSE	15 – 25%	LITTLE
5 – 8	MEDIUM STIFF	11 – 30	MEDIUM DENSE	30 – 45%	SOME
9 – 15	STIFF	31 – 50	DENSE	50 – 100%	MOSTLY
16 – 30	VERY STIFF	51 +	VERY DENSE		
30 +	HARD				

LEGEND: Auger Sample (AS); Rock Core (NC) and RQD (%) REC (%); Split-Spoon Sample (SS) and Blow Counts per 6" REC (N); Undisturbed (U)-Shelby Tube, (P)-Piston; Jar Sample (JS); Bag Sample (B)

BORING NO. SB-3

NOTES:

1. BORINGS WERE DRILLED BY NEW HAMPSHIRE BORING INC. IN NOVEMBER 2008, AND OBSERVED BY A REPRESENTATIVE FROM JACOBS.
2. INFORMATION ON EACH BORING LOG IS A COMPILATION OF SUBSURFACE CONDITIONS AND SOIL CLASSIFICATIONS OBTAINED FROM SAMPLES RECOVERED DURING THE FIELD EXPLORATION PROGRAM. SOIL LAYERS HAVE BEEN INTERPRETED BY COMMONLY ACCEPTED GEOTECHNICAL PROCEDURES.
3. REFER TO BORING LOCATION PLAN FOR LOCATIONS OF BORINGS.
4. GROUND SURFACE ELEVATIONS AND LOCATIONS OF BORINGS WERE SURVEYED BY ASEC CORPORATION. ALL VERTICAL CONTROL AND ELEVATIONS ARE BASED ON N.G.V.D. 1929.
5. GROUNDWATER LEVELS WERE MEASURED IN THE TEST BORINGS USING A WEIGHTED TAPE AT THE COMPLETION OF DRILLING. THE DATA INDICATED THAT GROUNDWATER LEVELS RANGED FROM APPROXIMATE EL. 201.5 FT TO 198.0 FT. WATER LEVELS RECORDED DURING DRILLING OR AFTER COMPLETION OF THE BORING SHOULD BE CONSIDERED APPROXIMATE AND REFER ONLY TO THE TIMES AND PLACES INDICATED. WATER LEVELS MAY VARY WITH THE CHANGE IN SEASONAL CONDITIONS OR CONSTRUCTION ACTIVITY.
6. THE STANDARD PENETRATION TEST WAS PERFORMED BY DRIVING A 2.0-INCH OUTSIDE DIAMETER, 1.375-INCH INSIDE DIAMETER SPLIT BARREL SAMPLER INTO UNDISTURBED SOIL BY MEANS OF A 140-POUND WEIGHT FALLING FREELY THROUGH A VERTICAL DISTANCE OF 30 INCHES. THE SAMPLER IS NORMALLY DRIVEN THREE OR FOUR SUCCESSIVE 6-INCH INCREMENTS. THE NUMBER OF BLOWS FOR EACH 6-INCH INCREMENT IS NOTED. THE PENETRATION IS NOTED WHENEVER THE PENETRATION INCREMENT VARIES FROM THE STANDARD 6-INCH INCREMENT. THE TOTAL NUMBER OF BLOWS REQUIRED FOR THE FINAL OR MIDDLE 12 INCHES OF PENETRATION IS THE STANDARD PENETRATION RESISTANCE (N) (ASTM D1586).
7. THE SUBSURFACE INFORMATION SHOWN ON THIS DRAWING WAS OBTAINED FOR DESIGN PURPOSES AND MAY NOT BE AN ADEQUATE REPRESENTATION OF ACTUAL CONDITIONS FOR PROJECT CONSTRUCTION. INFORMATION SHOWN, INCLUDING WATER LEVELS, REPRESENTS EXISTING CONDITIONS AT THE SPECIFIC BORING LOCATIONS AT THE TIME THE BORINGS WERE MADE. ALL RISKS RESULTING FROM USE OR INTERPRETATION OF THE SUBSURFACE DATA SHOWN SHALL BE BORNE BY THE CONTRACTOR.
8. SEE SHEET GT-3 FOR BORING LOGS SHEET 2 OF 2.

COMMONWEALTH OF MASSACHUSETTS — PAUL J. MURPHY — CIVIL — No. 45695 — REGISTERED PROFESSIONAL ENGINEER

MASSACHUSETTS BAY TRANSPORTATION AUTHORITY

FITCHBURG COMMUTER RAIL LINE
IMPROVEMENT PROJECT
CONTRACT NO. G67CN01

SOUTH ACTON STATION
BORING LOGS
SHEET 1 OF 2

ISSUE	DATE	DESCRIPTION	BY	CHKD.	APP.

HNTB — 300 APOLLO DRIVE, CHELMSFORD, MA 01824, (978) 905-4000 — PROJECT MANAGER — Date

MASSACHUSETTS BAY TRANSPORTATION AUTHORITY — APPROVED BY: — PROJECT MANAGER — Date 6/30/12

JACOBS — 343 CONGRESS STREET, BOSTON, MA 02110, (617) 242-9222

HORIZ: NONE	DES. BY: AMB	DR. BY: CWB	CHK. BY: JAJ	PLAN NO. 168561
VERT: NONE				SHEET GT-2
DATE: 5/17/12				ISSUE

FILE NAME: P:\MBTA\2008\E2X37800\CAD\700CADD\702STATIONS\South Acton\Geotech\ GT-2 & GT-3 Boring Logs.dwg
PLOT DATE: May 15, 2012 – 6:26pm

LOG OF TEST BORING

JACOBS

PROJECT	Fitchburg Line Improvements	BORING NO.	SB-4
LOCATION	South Acton Station		
OWNER	Massachusetts Bay Commuter Rail		
JOB NUMBER	E2X37800		SHEET 1 OF 1

INSPECTOR	A. Barbetta	CONTRACTOR	New Hampshire Boring	DRILLER	D. Dunklee
METHOD OF DRILLING		GROUNDWATER READINGS		DRILL RIG	Diedrich D-90
0	Wash Boring w/ 4" Casing	DATE/TIME	DEPTH(ft) / REMARKS	SPT HAMMER	140 lb Safety
14	Rollerbit Refusal	11/6/2008	3.5 / Upon Completion (In Casing)		

ELEVATION		201.5
DATUM		Datum
GRID	N	2992773
COORD	E	667722
DATE START		11/6/08
DATE END		11/6/08

DEPTH (ft)	STRATA SYMBOL	SAMPLE DATA SPT/RQD (%)	SAMPLE NO.	DEPTH (ft)	REC. (in)	ELEV.	FIELD CLASSIFICATION AND REMARKS
							Fill thickness estimated. No samples collected.
5		15 14 13 12	SS-1	4 - 6	14	197.5	Well graded sand with gravel (SW): mostly med to coarse sand, little gravel, brown, moist.
10		12 17 22 31	SS-2	9 - 11	18		Well graded sand with gravel (SW): mostly med to coarse sand, little gravel, trace silt, wet.
							- Rollerbit refusal at 14'. Relocated to SB-4A.
						187.5	
15							Bottom of Hole at 14'.
20							
25							
30							
35							

Page 1: 0-35 feet. Each subsequent page displays 40 feet.

COHESIVE SOIL		NON-COHESIVE SOIL		RELATIVE PROPORTIONS OF SOIL COMPONENTS	
BLOWS/FT	CONSISTENCY	BLOWS/FT	DENSITY		
0 - 2	VERY SOFT	0 - 4	VERY LOOSE	< 10%	TRACE
3 - 4	SOFT	5 - 10	LOOSE	15 - 25%	LITTLE
5 - 8	MEDIUM STIFF	11 - 30	MEDIUM DENSE	30 - 45%	SOME
9 - 15	STIFF	31 - 50	DENSE	50 - 100%	MOSTLY
16 - 30	VERY STIFF	51 +	VERY DENSE		
30 +	HARD				

LEGEND: Auger Sample (AS); Rock Core (RC) and RQD (%) REC (%); Split-Spoon Sample (SS) and Blow Counts per 6" REC (in); Undisturbed (U)-Shelby Tube, (P)-Piston; Jar Sample (JS); Bag Sample (B)

BORING NO. SB-4

LOG OF TEST BORING

JACOBS

PROJECT	Fitchburg Line Improvements	BORING NO.	SB-4A
LOCATION	South Acton Station		
OWNER	Massachusetts Bay Commuter Rail		
JOB NUMBER	E2X37800		SHEET 1 OF 1

INSPECTOR	A. Barbetta	CONTRACTOR	New Hampshire Boring	DRILLER	D. Dunklee
METHOD OF DRILLING		GROUNDWATER READINGS		DRILL RIG	Diedrich D-90
0	Wash Boring w/ 4" Casing	DATE/TIME	DEPTH(ft) / REMARKS	SPT HAMMER	140 lb Safety
16	NX Rock Core	11/6/2008	3.5 / Upon Completion (In Casing)		
21	Terminated				

ELEVATION		201.5
DATUM		Datum
GRID	N	2992773
COORD	E	667723
DATE START		11/6/08
DATE END		11/6/08

DEPTH (ft)	STRATA SYMBOL	SAMPLE DATA SPT/RQD (%)	SAMPLE NO.	DEPTH (ft)	REC. (in)	ELEV.	FIELD CLASSIFICATION AND REMARKS
						197.5	
5							
10							
15		13 26 100/5"	SS-3	14 - 15.4	8		Well graded sand with gravel (SW): mostly fine to med sand, little gravel, trace silt, gray, wet. (Rock fragments in shoe.)
		RQD=55	RC-1	16 - 21	50	185.5	Light gray GNEISS, coarse grained, hard, quartz intrusion, highly fractured, sediment in seams, moderate weathering, close joints, poor-fair condition.
20						180.5	Bottom of Hole at 21'.
25							
30							
35							

Page 1: 0-35 feet. Each subsequent page displays 40 feet.

COHESIVE SOIL		NON-COHESIVE SOIL		RELATIVE PROPORTIONS OF SOIL COMPONENTS	
BLOWS/FT	CONSISTENCY	BLOWS/FT	DENSITY		
0 - 2	VERY SOFT	0 - 4	VERY LOOSE	< 10%	TRACE
3 - 4	SOFT	5 - 10	LOOSE	15 - 25%	LITTLE
5 - 8	MEDIUM STIFF	11 - 30	MEDIUM DENSE	30 - 45%	SOME
9 - 15	STIFF	31 - 50	DENSE	50 - 100%	MOSTLY
16 - 30	VERY STIFF	51 +	VERY DENSE		
30 +	HARD				

LEGEND: Auger Sample (AS); Rock Core (RC) and RQD (%) REC (%); Split-Spoon Sample (SS) and Blow Counts per 6" REC (in); Undisturbed (U)-Shelby Tube, (P)-Piston; Jar Sample (JS); Bag Sample (B)

BORING NO. SB-4A

LOG OF TEST BORING

JACOBS

PROJECT	Fitchburg Line Improvements	BORING NO.	SB-5
LOCATION	South Acton Station		
OWNER	Massachusetts Bay Commuter Rail		
JOB NUMBER	E2X37800		SHEET 1 OF 1

INSPECTOR	A. Barbetta	CONTRACTOR	New Hampshire Boring	DRILLER	D. Dunklee
METHOD OF DRILLING		GROUNDWATER READINGS		DRILL RIG	Diedrich D-90
0	Wash Boring w/ 4" Casing	DATE/TIME	DEPTH(ft) / REMARKS	SPT HAMMER	140 lb Safety
5	NX Rock Core	11/7/2008	3.5 / Upon Completion (In Casing)		
10	Terminated				

ELEVATION		201.4
DATUM		Datum
GRID	N	2992743
COORD	E	667969
DATE START		11/7/08
DATE END		11/7/08

DEPTH (ft)	STRATA SYMBOL	SAMPLE DATA SPT/RQD (%)	SAMPLE NO.	DEPTH (ft)	REC. (in)	ELEV.	FIELD CLASSIFICATION AND REMARKS
		5 10 11 9	SS-1	0 - 2			Well graded gravel with sand (GW): mostly gravel (ballast), some med to coarse sand, trace silt, moist. (FILL)
5		100/6"	SS-2	4 - 4.5			Well graded sand with gravel (SW): mostly coarse sand, some gravel, trace black slag, trace silt, wet. (FILL) (Spoon refusal at 4.5')
		RQD=50	RC-1	5 - 10	60	196.4	Gray/dark gray GNEISS, medium to coarse grained, severe weathering, highly fractured, poor condition.
10						191.4	Bottom of Hole at 10'.
15							
20							
25							
30							
35							

Page 1: 0-35 feet. Each subsequent page displays 40 feet.

COHESIVE SOIL		NON-COHESIVE SOIL		RELATIVE PROPORTIONS OF SOIL COMPONENTS	
BLOWS/FT	CONSISTENCY	BLOWS/FT	DENSITY		
0 - 2	VERY SOFT	0 - 4	VERY LOOSE	< 10%	TRACE
3 - 4	SOFT	5 - 10	LOOSE	15 - 25%	LITTLE
5 - 8	MEDIUM STIFF	11 - 30	MEDIUM DENSE	30 - 45%	SOME
9 - 15	STIFF	31 - 50	DENSE	50 - 100%	MOSTLY
16 - 30	VERY STIFF	51 +	VERY DENSE		
30 +	HARD				

LEGEND: Auger Sample (AS); Rock Core (RC) and RQD (%) REC (%); Split-Spoon Sample (SS) and Blow Counts per 6" REC (in); Undisturbed (U)-Shelby Tube, (P)-Piston; Jar Sample (JS); Bag Sample (B)

BORING NO. SB-5

NOTE:

1. SEE SHEET GT-2 FOR DETAILED NOTES.

COMMONWEALTH OF MASSACHUSETTS — PAUL J. MURPHY — CIVIL — No. 45695 — REGISTERED PROFESSIONAL ENGINEER

MASSACHUSETTS BAY TRANSPORTATION AUTHORITY

FITCHBURG COMMUTER RAIL LINE IMPROVEMENT PROJECT CONTRACT NO. G67CN01

SOUTH ACTON STATION BORING LOGS SHEET 2 OF 2

ISSUE	DATE	DESCRIPTION	BY	CHKD.	APP.

HNTB — 300 APOLLO DRIVE CHELMSFORD, MA 01824 (978) 905-4000 — PROJECT MANAGER — Date 5/16/12

MASSACHUSETTS BAY TRANSPORTATION AUTHORITY — APPROVED BY: PROJECT MANAGER — Date 6/30/12

JACOBS — 343 CONGRESS STREET BOSTON, MA 02110 (617) 242-9222

HORIZ: NONE
VERT: NONE
DATE: 5/17/12

DES. BY	DR. BY	CHK. BY
AMB	CWB	JAJ

PLAN NO. 168562

SHEET GT-3

ISSUE

FILE NAME: P:\MBTA\2008\E2X37800\CAD\700CADD\702STATIONS\South Acton\Geotech\ GT-2 & GT-3 Boring Logs.dwg
PLOT DATE: May 15, 2012 - 6:33pm

SYMBOLS

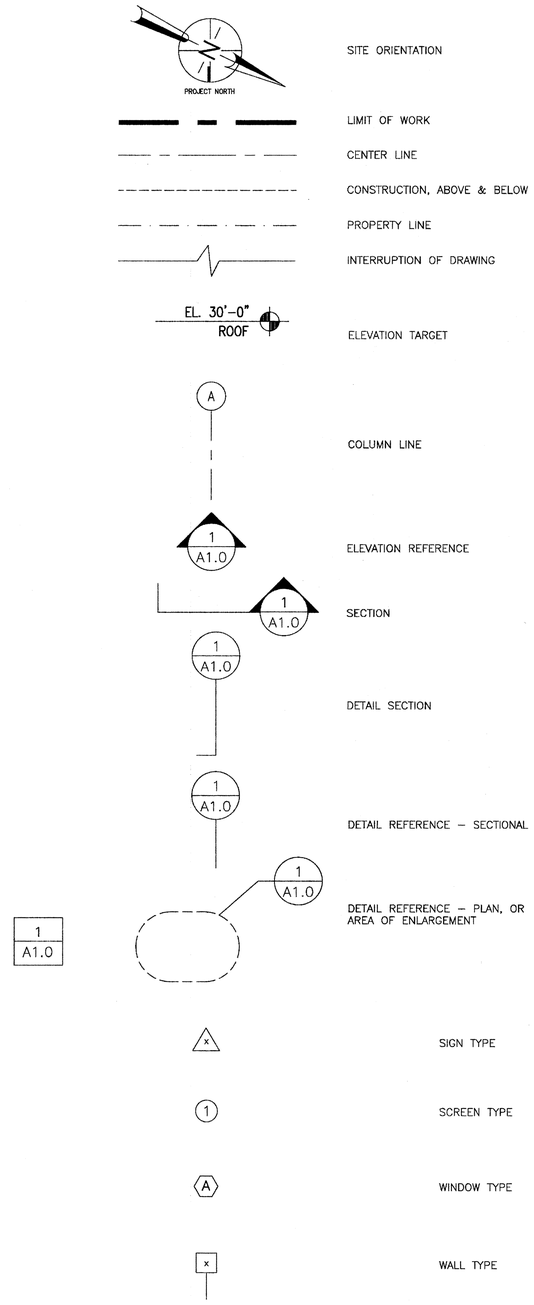

ARCHITECTURAL STEEL NOTES

1. ALL EXTERIOR EXPOSED STEEL TO BE FABRICATED AS "ARCHITECTURALLY" EXPOSED STRUCTURAL STEEL CONFORMING TO ALL REQUIREMENTS OF THAT SPECIFICATION IN THE AISC MANUAL OF STEEL CONSTRUCTION. SECTION 10 CODE OF STANDARD PRACTICE (INCLUDING STRUCTURAL STEEL).
2. ALL EXTERIOR EXPOSED STEEL SHALL BE HOT DIP NICKEL GALVANIZED PER SPECIFICATION SECTION 05041.
3. ALL ARCHITECTURAL STEEL CONNECTIONS SHALL BE DESIGNED WITH THE FIELD ADJUSTABILITY TO ALLOW SPECIFIED TOLERANCES TO BE ACHIEVED.
4. ALL WELDS IN ARCHITECTURAL STEEL SHALL BE SMOOTH AND CONTINUOUS.
5. THE INTENTION OF THESE DOCUMENTS IS TO ELIMINATE ANY AND ALL FIELD WELDING AFFECTING FINISHED, EXPOSED SURFACES. NO BURNING OF ARCHITECTURAL STEEL SHALL BE ALLOWED WITHOUT PRIOR APPROVAL OF THE ENGINEER.
6. ALL ARCHITECTURAL STEEL SHALL BE FABRICATED WATER TIGHT AND ALL STEEL TO STEEL JOINTS SHALL BE SEALED AS INDICATED.
7. ALL REQUIRED VENT AND DRAIN HOLES FOR GALVANIZING SHALL BE SHOWN ON SHOP DRAWINGS FOR APPROVAL.
8. GUARDRAIL IS 2" OD SCHEDULE 40 STEEL PIPE.
9. HANDRAIL IS 1–1/2" OD SCHEDULE 40 STEEL PIPE.
10. ALL GUARDRAILS WITH STEEL SUPPORT BOLTED TO VERTICAL F.B. POSTS INCLUDE 2" X 1/2" F.B. FRAME WITH 1/2" PICKETS, EXCEPT WHERE SPECIFICALLY EXCLUDED. HANDRAILS ARE REQUIRED CONTINUOUSLY ALONG BOTH SIDES OF RAMPS AND STAIRS.
11. OTHER THAN HANDRAILS AND EGRESS STAIR ELEMENTS (INCLUDINIG TREADS, RISERS, STRINGERS, LANDINGS AND RELATED DETAILS, BUT NOT GUARD FENCE) SHALL BE SHOP PAINTED UNLESS SPECIFICALLY NOTED OTHERWISE.
12. REFER TO STRUCTURAL DRAWINGS FOR ADDITIONAL DETAILS.
13. UNO ALL ARCHITECTURAL STEEL SHALL BE GALVANIZED AFTER FABRICATION AND SHOP PAINTED.
14. ALL CLIPS, ANGLES AND ATTACHMENTS THAT ARE WELDED SHALL BE APPLIED TO STRUCTURAL STEEL PRIOR TO SHOP GALVANIZED AND SHOP PAINTED.

GENERAL NOTES

1. CONTRACTOR SHALL FIELD VERIFY ALL CONDITIONS AND DIMENSIONS AND IMMEDIATELY REPORT DISCREPANCIES TO THE ENGINEER.
2. LIMIT OF WORK LINES MAY BE LOCATED ON PRIVATE OR MUNICIPAL PROPERTY. CONTRACTOR SHALL OBTAIN NECESSARY CONSTRUCTION EASEMENTS TO PERFORM WORK IN THOSE AREAS AND SHALL RESTORE THOSE AREAS TO THEIR ORIGINAL CONDITION.
3. PAVED AREAS SHALL BE PITCHED A MINIMUM 1/8" PER FOOT TO PROVIDE POSITIVE DRAINAGE WITHOUT PUDDLING.
4. THE CONTRACTOR SHALL MINIMIZE THE REMOVAL OF PAVEMENT IN AREAS NOT INTENDED TO BE REMOVED, BUT ADJACENT TO NEW CONSTRUCTION; SUCH AS EXISTING PARKING AREAS OR ROADWAYS. EXISTING PAVEMENT TO REMAIN SHALL BE SAWCUT AT THE EDGE WHERE NEW MATERIAL IS TO MEET TO FORM A CLEAN STRAIGHT JOINT.
5. EXISTING OR NEW PAVEMENT STRIPES WILL BE REPAINTED WHERE DAMAGED BY CONSTRUCTION AS DIRECTED BY THE ENGINEER.
6. ALL EXTERIOR EXPOSED VERTICAL AND NEAR VERTICAL CONCRETE SURFACES SHALL RECEIVE A CLEAR ANTI–GRAFFITI AND PROTECTIVE SEALER, AS SPECIFIED.
7. ALL EXTERIOR EXPOSED TO VIEW HORIZONTAL, VERTICAL AND SLOPED CONCRETE SURFACES SHALL RECEIVE PENETRATING CONCRETE SEALER AS SPECIFIED.
8. ALL PRECAST CONCRETE IS ARCHITECTURAL PRECAST. REFER TO STRUCTURAL DRAWINGS FOR REINFORCING, CONNECTIONS, AND BEARING.
9. ALL STEEL IS ARCHITECTURAL EXPOSED STEEL AS DEFINED BY AISC. REFER TO STRUCTURAL DRAWINGS FOR WELDS, BOLTS, CONNECTIONS, AND SIZES.
10. THE CONTRACTOR SHALL EXAMINE THE DOCUMENTS TO VERIFY DIMENSIONS AND LOCATIONS OF STRUCTURAL, ELECTRICAL, LANDSCAPE AND CIVIL DISCIPLINES WHICH MAY NOT BE SHOWN ON ARCHITECTURAL DRAWINGS.
11. THE CONTRACTOR SHALL COORDINATE THE PLANS AND SPECIFICATIONS OF ALL DISCIPLINES AND WORKING DRAWINGS OF EACH TRADE TO DETERMINE THE CORRECT LOCATIONS OF ALL EMBEDDED ITEMS: CONDUITS, SLEEVES, ANCHOR BOLTS, INSERTS, REGLET RECESSES, AND OPENINGS.
12. DESIGN AND CONSTRUCTION OF ALL WORK SHALL CONFORM TO CURRENT EDITION OF THE FOLLOWING:

    MBTA STANDARD SPECIFICATIONS INCLUDING SPECIAL PROVISIONS
    MASSACHUSETTS BUILDING CODE, 780 CMR EIGHTH EDITION
    AMERICANS WITH DISABILITIES ACT (A.D.A.)
    UNIFORM FEDERAL ACCESSIBILITY STANDARDS (UFAS)
    MASSACHUSETTS ARCHITECTURAL ACCESS BOARD RULES AND REGULATIONS

    IN CASE OF CONFLICT BETWEEN THE CODES, STANDARDS, REGULATIONS, SPECIFICATIONS, GENERAL NOTES AND/OR MANUFACTURER'S REQUIREMENTS, THE MOST STRINGENT PROVISIONS SHALL TAKE PRECEDENCE.
13. ALL EXPOSED CAST IN PLACE CONCRETE SHALL HAVE ARCHITECTURAL FINISH.

REGISTERED ARCHITECT MICHAEL A. BASKIN No.4453 BOSTON MA COMMONWEALTH OF MASSACHUSETTS

MASSACHUSETTS BAY TRANSPORTATION AUTHORITY

FITCHBURG COMMUTER RAIL LINE
IMPROVEMENT PROJECT
CONTRACT NO. G67PS01

SOUTH ACTON STATION
GENERAL NOTES
SYMBOLS

ISSUE	DATE	DESCRIPTION	BY	CHKD.	APP.

HNTB
300 APOLLO DRIVE
CHELMSFORD, MA 01824
(978) 905–4000

PROJECT MANAGER — Date 5/18/12

MASSACHUSETTS BAY TRANSPORTATION AUTHORITY
APPROVED BY
PROJECT MANAGER — Date 6/30/12

Lozano, Baskin, and Associates, Inc.
Architecture•Urban Design•City Planning
205 Mt. Auburn St. Watertown, MA 02472

HORIZ: N/A
VERT: N/A
DATE: 05/17/12

DES. BY	DR. BY	CHK. BY
MB DW	DW	MB

PLAN NO. 168565
SHEET A–0.1
ISSUE

FILE NAME: Z:\Active Projects\0814 Fitchburg Main Line\0814.01 So. Acton\7.0 Design Development\7.4 100% Submission\ 00 A–ABREV.dwg
PLOT DATE: May 16, 2012 – 3:24pm

ABBREVIATIONS

A	ALGEBRAIC DIFFERENCE OF GRADES
AB	ANCHOR BOLT
ABAN	ABANDON, ABANDONED
ABUT	ABUTMENT
AC	ASPHALTIC CONCRETE
ADD	ADDENDUM
ADDL	ADDITIONAL
ADT	AVERAGE DAILY TRAFFIC
ALUM	ALUMINUM
ALT	ALTERNATE, ALTERNATIVE
APP	APPROVED
APPROX	APPROXIMATE
ARCH	ARCHITECTURAL
ARMJT	ARMORED JOINT
AUX	AUXILIARY
AVE	AVENUE
AVG	AVERAGE
AWG	AMERICAN WIRE GAUGE
B&B	BALLED AND BURLAPPED
BIT	BITUMINOUS
BIT CONC	BITUMINOUS CONCRETE
BL OR ℄	BASE LINE
BLDG	BUILDING
BMA	BITUMINOUS MACADAM
BO	BY OTHERS
BOC	BOTTOM OF CURB
BOD	BOTTOM OF DITCH
BOF	BOTTOM OF FOOTING
BOS	BOTTOM OF STEEL
BOT	BOTTOM BEARING
BRG	BEARING
C	CELSIUS (DEGREE), STEEL CHANNEL
CAT	CATENARY
CB	CATCH BASIN
CBCI	CATCH BASIN WITH CURB INLET
CEM	CEMENT
CF	CUBIC FEET
CFM	CUBIC FEET PER MINUTE
CFS	CUBIC FEET PER SECOND
CG	CONTAINER GROWN
CI	CAST IRON
CIP	CAST IRON PIPE
CIP CONC	CAST-IN-PLACE CONCRETE
CIT	CHANGE IN TYPE
CIV	CIVIL
CJ	CONTROL JOINT
CL	CLASS
C	CENTERLINE
CLD	CEMENT LINED DUCT, CONCRETE LOADING DOCK
CLDIP	CEMENT LINED DUCTILE IRON PIPE
CLF	CHAIN LINK FENCE
CMP	CORRUGATED METAL PIPE
CMU	CONCRETE MASONRY UNIT
CO	CLEAN-OUT, COUNTY
COL	COLUMN
COMM	COMMUNICATIONS
COMM/SIH	COMMUNICATION CENTER/ SIGNAL INSTALLATION HOUSE
CONC	CONCRETE
COND	CONDUIT
CONN	CONNECTOR, CONNECTION
CONST	CONSTRUCT, CONSTRUCTION
CONT	CONTINUE(D), CONTINUATION
CSO	COMBINED SEWER OVERFLOW
CSP	CORRUGATED STEEL PIPE
C TO C	CENTER TO CENTER
CTE	CONNECT TO EXISTING
CTR	CENTER
CULV	CULVERT
CY	CUBIC YARD
DCBCI	DOUBLE CATCH BASIN WITH CURB INLET
D	DIRECTIONAL PERCENTAGE OF DESIGN HOURLY VOLUME, DEGREE OF CURVE, DRAIN
DC	DIRECT CURRENT
DCB	DOUBLE CATCH BASIN
DDHV	DIRECTIONAL DESIGN HOURLY VOLUME
DELTA	DEGREE OF CURVE
DEMO	DEMOLITION
DEPT	DEPARTMENT
DHV	DESIGN HOURLY VOLUME
DI	DROP INLET
DIA OR ø	DIAMETER
DIAG	DIAGONAL, DIAGRAM
DIAPH	DIAPHRAGM
DIM	DIMENSION
DIP	DUCTILE IRON PIPE
DL	DEAD LOAD
DMH	DRAIN MANHOLE
DN	DOWN
DO	DITTO
DWG	DRAWING
DW	DRIVEWAY
E	EAST
EA	EACH
EB	ELECTRIC BOX
EBD	EASTBOUND
EF	EACH FACE
EGL	ENERGY GRADE LINE
EHH	ELECTRIC HANDHOLE
EJ	EXPANSION JOINT
EL	ELEVATION
ELBR	ELDERBERRY
ELEC	ELECTRICAL
EMH	ELECTRIC MANHOLE
ENGR	ENGINEER
ENT	ENTRANCE
EP	EDGE OF PAVEMENT
EQ	EQUAL
ES	EACH SIDE
EST	ESTIMATE
EXC	EXCAVATION
EXIST	EXISTING
EXP	EXPANSION
EXT	EXTERIOR, EXTERNAL
EW	EACH WAY
F	FAHRENHEIT (DEGREE)
FA	FIRE ALARM, FEDERAL AID
FB	FLOOR BEAM, FLAT BAR
FC	FIBER CONDUIT
FCM	FRACTURE CRITICAL MEMBER
F&C	FRAME AND COVER
FD	FIBER DUCT
FDN	FOUNDATION
FDR	FLOOR DRAIN
FF	FAR FACE
FG	FIBERGLASS
F&G	FRAME AND GRATE
FIN	FINISH
FL	FLOW LINE
FLR	FLOOR
FM	FORCE MAIN
FS	FIRE SIGNAL, FEDERAL SPECIFICATIONS
FSP	FIRE STANDPIPE
FT	FOOT, FEET
FTG	FOOTING
FVT	FIELD SHEAR VANE TEST
GA	GAUGE
GALV	GALVANIZED
GEN	GENERAL
GEOTECH	GEOTECHNICAL
GG	GAS GATE
GI	GUTTER INLET
GICI	GUTTER INLET WITH CURB INLET
GM	GAS METER
GP	GUARD POST
GRAN	GRANITE
GV	GAS VALVE
HC	ACCESSIBLE
HDWL	HEADWALL
HGL	HYDRAULIC GRADE LINE
HH	HANDHOLE
HI	HEIGHT OF INSTRUMENT
HMA	HOT MIX ASPHALT
HORIZ	HORIZONTAL
HP	HIGH POINT, HORSEPOWER, H-PILE
HSB	HIGH STRENGTH BOLT
HSS	HOLLOW STEEL SECTION
HT	HIGH TENSION, HEIGHT
HYD	HYDRANT
ID	INSIDE DIAMETER, IDENTIFICATION
IN	INCH
INT	INTERIOR, INTERNAL
INV	INVERT
IP	IRON PIPE
IR	IRON ROD
IT	INTERSECTION OF SLOPES OR PROFILE GRADE LINES
JCT	JUNCTION
JT	JOINT
	RATIO OF DESIGN HOURLY VOLUME TO AVERAGE DAILY TRAFFIC, KIPS, RATE OF CHANGE OF VERTICAL CURVE
K	
L	LENGTH
LAT	LATERAL
LB(S)	POUND(S)
LDSCP	LANDSCAPING
LF	LINEAR FEET
LL	LIVE LOAD
LOC	LOCATION, LOCAL
LP	LOW POINT, LIGHT POLE
LS	LOW SERVICE WATER
LT	LEFT
MASS	MASSACHUSETTS
MAX	MAXIMUM
MBTA	MASSACHUSETTS BAY TRANSPORTATION AUTHORITY
MC	METAL COVER
M/E	MECHANICAL AND ELECTRICAL
MECH	MECHANICAL
MG	METAL GRATE, MEGA GRAM
MH	MANHOLE
MHB	MASSACHUSETTS HIGHWAY BOUND
MHD	MASSACHUSETTS HIGHWAY DEPARTMENT
MHW	MEAN HIGH WATER
MIN	MINIMUM
MISC	MISCELLANEOUS
MKG	MARKING
MLW	MEAN LOW WATER
MPH	MILES PER HOUR
MSE	MECHANICALLY STABILIZED EARTH
MSL	MEAN SEA LEVEL
N	NORTH
NA	NOT ACCESSIBLE
N/A	NOT APPLICABLE
NAD	NORTH AMERICAN DATUM
NBD	NORTHBOUND
NF	NEAR FACE
N/F	NOW OR FORMERLY
NGVD	NATIONAL GEODETIC VERTICAL DATUM
NIC	NOT IN CONTRACT
NJB	NEW JERSEY BARRIER
NO OR #	NUMBER
NPT	NATIONAL PIPE THREAD
NPV	NO PIPES VISIBLE
NS	NEAR SIDE
NTS	NOT TO SCALE
OC	ON CENTER
OD	OUTSIDE DIAMETER
OG	ORIGINAL GROUND
OHW	OVERHEAD WIRES
OPP	OPPOSITE
OW	OBSERVATION WELL
PB	PULL BOX
PC	POINT OF CURVATURE
PCC	POINT OF COMPOUND CURVATURE
PCCP	PRESTRESSED CONCRETE CYLINDER PIPE
PCF	POUNDS PER CUBIC FOOT
PE	POLYETHYLENE, PROFESSIONAL ENGINEER
PERF	PERFORATED
PERM	PERMANENT
PGL	PROFILE GRADE LINE
PI	POINT OF INTERSECTION OF TANGENTS
PIV	POST INDICATOR VALVE
PJT	PARAFFIN JOINT
PKG	PARKING
PL	PLATE
ℙ	PROPERTY LINE
PM	PARKING METER
PPC	PRECAST PRESTRESSED CONCRETE
PPM	PARTS PER MILLION
PRC	POINT OF REVERSE CURVATURE
PREL	PRELIMINARY
PRIV	PRIVATE
PROJ	PROJECT
PROP	PROPOSED
PS	POLICE SIGNAL, PUMPING STATION (w/SYMBOL)
PSF	POUNDS PER SQUARE FOOT
PSI	POUNDS PER SQUARE INCH
PT	POINT, POINT OF TANGENCY
PVC	POLYVINYL CHLORIDE, POINT OF VERTICAL CURVATURE
PVI	POINT OF VERTICAL INTERSECTION
PVMT	PAVEMENT
PVT	POINT OF VERTICAL TANGENCY
PWW	PAVED WATER WAY
QTY	QUANTITY
RAD, R	RADIUS
RC	REINFORCED CONCRETE
RCB	REINFORCED CONCRETE BOX CULVERT
RCP	REINFORCED CONCRETE PIPE
RD	ROAD
RDWY	ROADWAY
REC	RECORD
REINF	REINFORCE, REINFORCING, REINFORCEMENT
REL	RELOCATE, RELOCATED
REM	REMOVE
REQD	REQUIRED
RET	RETAIN, RETAINING
REV	REVISION, REVISED
RGS	RIGID GALVANIZED STEEL
RMDL	REMODEL
ROW	RIGHT-OF-WAY
RRP	RIPRAP
R&R	REMOVE AND RESET
R&S	REMOVE AND STACK
RT	RIGHT
RTE	ROUTE
S	SOUTH, SLOPE, SIGN SANITARY
SB	SPECIAL BORROW, STONE BOUND
SBC	STONE BOX CULVERT
SBD	SOUTHBOUND
SCPR	SCUPPER
SD	STANDARD DRAWING, STORM DRAIN
SE	SUPER ELEVATION
SF	SQUARE FEET
SH	SHEET
SHLD	SHOULDER
SHLL	STATE HIGHWAY LAYOUT LINE
SHLO	STATE HIGHWAY LAYOUT
SI	SQUARE INCH
SIM	SIMILAR
SIP	STAY-IN-PLACE FORMS
SK	SKETCH, SKEW, SHEAR KEY
SL	SURVEY LINE
SMH	SEWER MANHOLE
SP	STEEL PIPE OR STATIC PRESSURE
SPEC(S)	SPECIFICATION(S)
SPT	STANDARD PENETRATION TEST
SQ	SQUARE
SS	SANITARY SEWER, STAINLESS STEEL
SSMH	SANITARY SEWER MANHOLE
SST	STAINLESS STEEL
ST	STEAM, STREET
STA	STATION
STD	STANDARD
STL	STEEL
SUB	SUBMITTED, SUBSTRUCTURE
SURF	SURFACE, SURFACING
SW	SIDEWALK
SWR	SIDEWALK RAMP
SY	SQUARE YARD
SYM	SYMMETRICAL
T	PERCENTAGE OF TRUCKS, TON, TANGENT
TAN	TANGENT
T&B	TOP & BOTTOM
TBR	TO BE RELOCATED
TCB	TRAFFIC CONTROL BOX
TEL	TELEPHONE
TEMP	TEMPERATURE, TEMPORARY
THRU	THROUGH
TMH	TELEPHONE MANHOLE
TOC	TOP OF CONCRETE, TOP OF CURB
TOF	TOP OF FOOTING
TOG	TOP OF GRATE
TOP	TOP OF PIPE
TOPO	TOPOGRAPHY
TOR	TOP OF RAIL
TOS	TOP OF STEEL
TOW	TOP OF WALL
TP	TURNING POINT
TR SIG COND	TRAFFIC SIGNAL CONDUIT
TRANS	TRANSITION
TRD	TREAD
TRWY	TRAVELED WAY
TS	TRAFFIC SIGNAL, TUBE STEEL
TSC	TRAFFIC SURVEILLANCE AND CONTROL
TTY	TEXT TELEPHONE
TV	TELEVISION (CABLE)
TVM	TICKET VENDING MACHINE
TVMH	TELEVISION MANHOLE (CABLE)
TVP	TOP OF VERTICAL PIPE
TYP	TYPICAL
UD	UNDERDRAIN
UP	UTILITY POLE
ULT	ULTIMATE
UNO	UNLESS NOTED OTHERWISE
UTIL	UTILITIES
VAR	VARIES, VARIABLE
VCP	VITRIFIED CLAY PIPE
VERT	VERTICAL
VG	VARIABLE GRAVEL
VM	VALVE METER
VMS	VARIABLE MESSAGE SIGN
VOL	VOLUME
W	WEST, WATER, WIDE FLANGE STEEL
w/	WITH
WBD	WESTBOUND
WE	WATER ELEVATION
WG	WATER GATE
WIP	WROUGHT IRON PIPE
WM	WATER METER, WATER MAIN
WMH	WATER MANHOLE
w/o	WITHOUT
WP	WOOD POST, WORKING POINT, WATERPROOF(ING)
WPM	WATERPROOFING MEMBRANE
WS	WATERSTOP
WT	WIDE FLANGE STEEL CUT
WSP	WELDED STEEL PIPE
WV	WATER VALVE
WWF	WELDED WIRE FABRIC
WCR	WHEELCHAIR RAMP
WQS	WATER QUALITY STRUCTURE
X-SECT	CROSS-SECTION
YD	YARD
YR	YEAR

REGISTERED ARCHITECT MICHAEL A. SIGNA No.4453 BOSTON MA COMMONWEALTH OF MASSACHUSETTS

MASSACHUSETTS BAY TRANSPORTATION AUTHORITY

FITCHBURG COMMUTER RAIL LINE
IMPROVEMENT PROJECT
CONTRACT NO. G67PS01

SOUTH ACTON STATION
ABBREVIATIONS

ISSUE	DATE	DESCRIPTION	BY	CHKD.	APP.

HNTB
300 APOLLO DRIVE
CHELMSFORD, MA 01824
(978) 905-4000

PROJECT MANAGER — Date 5/2/12

MASSACHUSETTS BAY TRANSPORTATION AUTHORITY
APPROVED BY:
PROJECT MANAGER — Date 6/30/12

Lozano, Baskin, and Associates, Inc.
Architecture•Urban Design•City Planning
205 Mt. Auburn St. Watertown, MA 02472

HORIZ: N/A	DES. BY	DR. BY	CHK. BY	PLAN NO. 168566	ISSUE
VERT: N/A	MB	DW	MB		
DATE: 05/17/12	DW			SHEET A-0.2	

FILE NAME: Z:\Active Projects\0814 Fitchburg Main Line\0814.01 So. Acton\7.0 Design Development\7.4 100% Submission\ 00 A-ABREV.dwg
PLOT DATE: May 16, 2012 - 3:25pm

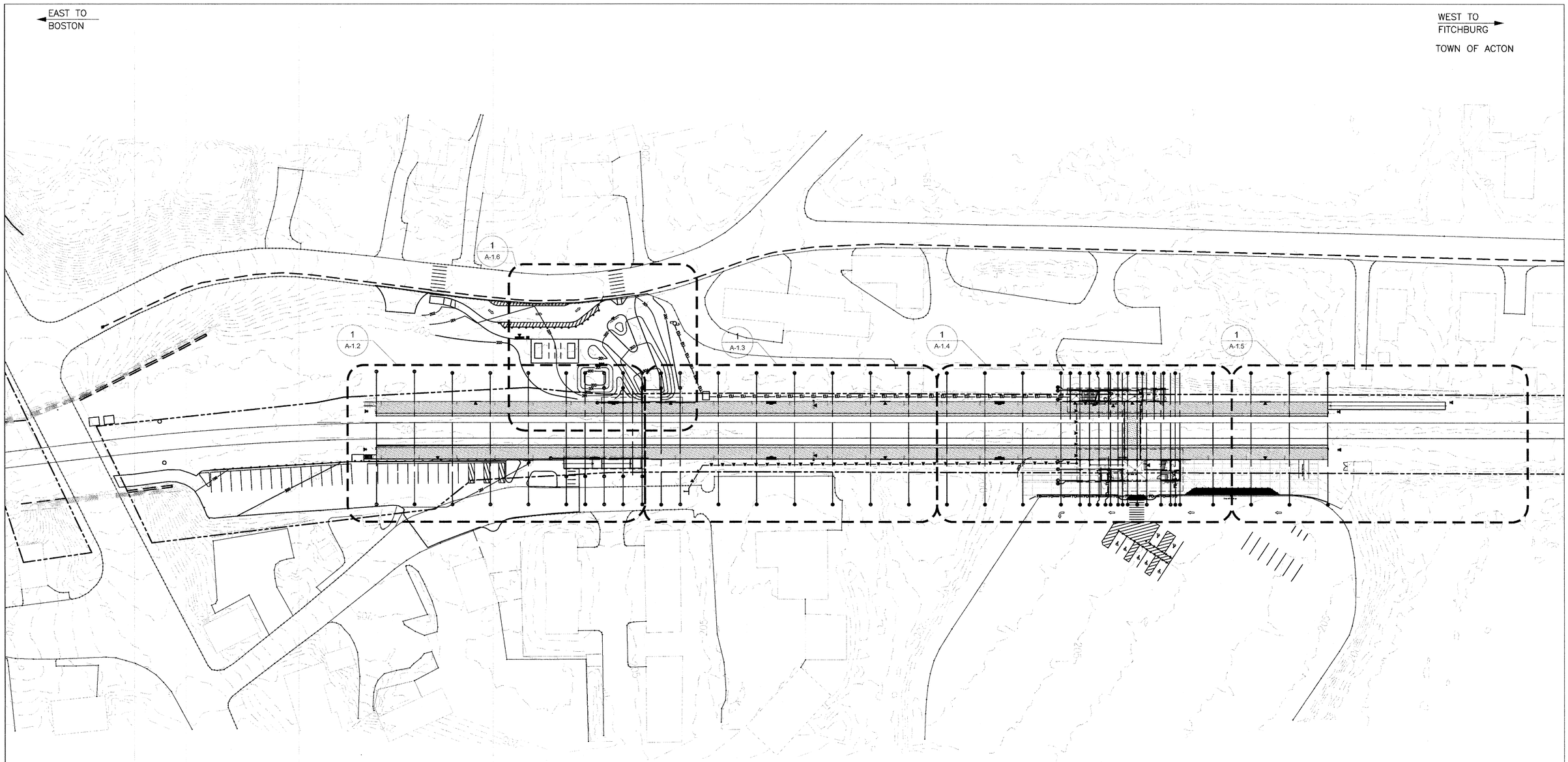

1 SITE PLAN
1:500

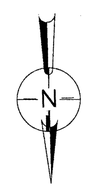

PROJECT NORTH

0 250 500 1000
SCALE: 1:500

MASSACHUSETTS BAY TRANSPORTATION AUTHORITY

FITCHBURG COMMUTER RAIL LINE
IMPROVEMENT PROJECT
CONTRACT NO. G67PS01

SOUTH ACTON STATION
SITE KEY PLAN

ISSUE	DATE	DESCRIPTION	BY	CHKD.	APP.

Lozano, Baskin, and Associates, Inc.
Architecture•Urban Design•City Planning
205 Mt. Auburn St. Watertown, MA 02472

HNTB
300 APOLLO DRIVE
CHELMSFORD, MA 01824
(978) 905-4000

PROJECT MANAGER — Date 5/30/12

MASSACHUSETTS BAY TRANSPORTATION AUTHORITY
APPROVED BY:
PROJECT MANAGER — Date 6/30/12

HORIZ: N/A	DES. BY	DR. BY	CHK. BY	PLAN NO. 168567	ISSUE
VERT: N/A	MB DW	DW	MB		
DATE: 05/17/12				SHEET A-1.1	

FILE NAME: C:\Documents and Settings\Mackintosh LBA\local settings\temp\AcPublish_764\ 00 A-SP0001.dwg
PLOT DATE: May 16, 2012 – 3:25pm

EAST TO BOSTON

WEST TO FITCHBURG

TOWN OF ACTON

STA. 1330+60.07 N08 -05-36°E (TYP.)

STA. 1330+92.03

STA. 1331+24.01

STA. 1331+56.00

STA. 1331+86.00

STA. 1332+22.00

STA. 1332+38.00

STA. 1332+52.00

STA. 1332+84.00

MATCH LINE SEE SHEET A1.6

EGRESS STAIR

SIMILAR AND OPPOSITE

GUARD FENCE

ROOF LINE (ABOVE)

C.L. INBOUND TRACK

C.L. OUTBOUND TRACK

RUBBING STRIP (TYP)

TACTILE SURFACE (TYP)

GUARD FENCE

DOWNSPOUT (TYP)

RAMP LANDING

RAMP LANDING

PLATFORM ACCESS RAMP

ROOF LINE (ABOVE)

EGRESS STAIR

MATCH LINE SEE SHEET A1.3

1 ENLARGED SITE PLAN
1/8"=1'-0"

NOTES:
1. SEE A-6.1 FOR SIGN SCHEDULE.
2. SEE CIVIL DWGS FOR SITE LAYOUT.
3. SEE DWGS A-8.1 FOR LANDSCAPE.

PROJECT NORTH

SCALE: 1/4"=1'-0"

ISSUE	DATE	DESCRIPTION	BY	CHKD.	APP.

Lozano, Baskin, and Associates, Inc.
Architecture•Urban Design•City Planning
205 Mt. Auburn St. Watertown, MA 02472

MASSACHUSETTS BAY TRANSPORTATION AUTHORITY

FITCHBURG COMMUTER RAIL LINE
IMPROVEMENT PROJECT
CONTRACT NO. G67PS01

SOUTH ACTON STATION ENLARGED SITE PLAN

HNTB
300 APOLLO DRIVE
CHELMSFORD, MA 01824
(978) 905-4000

PROJECT MANAGER 5/30/12 Date

MASSACHUSETTS BAY TRANSPORTATION AUTHORITY
APPROVED BY:
PROJECT MANAGER 6/30/12 Date

HORIZ: N/A	DES. BY MB	DR. BY DW	CHK. BY MB	PLAN NO. 168568
VERT: N/A	DW			SHEET A-1.2
DATE: 05/17/12				ISSUE

FILE NAME: C:\Documents and Settings\Mackintosh LBA\local settings\temp\AcPublish_764\ 00 A-SP0002.dwg
PLOT DATE: May 16, 2012 - 3:25pm

EAST TO BOSTON

WEST TO FITCHBURG

TOWN OF ACTON

8.5 STA. 1332+52.00

9 STA. 1333+16.00

10 STA. 1333+48.00

11 STA. 1333+80.00

12 STA. 1334+12.00

13 STA. 1334+44.00

14 STA. 1334+76.00

15 STA. 1335+08.00

SIMILAR AND OPPOSITE

GUARD FENCE

DOWNSPOUT

ROOF LINE (ABOVE)

PLATFORM ACCESS WALKWAY

C.L. INBOUND TRACK

C.L. OUTBOUND TRACK

RUBBING STRIP (TYP)

TACTILE SURFACE (TYP)

GUARD FENCE

MATCH LINE SEE SHEET A1.2

MATCH LINE SEE SHEET A1.4

1 ENLARGED SITE PLAN
1/8"=1'-0"

NOTES:
1. SEE A-6.1 FOR SIGN SCHEDULE.
2. SEE CIVIL DWGS FOR SITE LAYOUT.
3. SEE DWGS A-8.1 FOR LANDSCAPE.

PROJECT NORTH

0 4 8 16
SCALE: 1/4"=1'-0"

REGISTERED ARCHITECT MICHAEL A. BIGNAM No. 4453 BOSTON MA COMMONWEALTH OF MASSACHUSETTS

MASSACHUSETTS BAY TRANSPORTATION AUTHORITY

FITCHBURG COMMUTER RAIL LINE
IMPROVEMENT PROJECT
CONTRACT NO. G67PS01

SOUTH ACTON STATION
ENLARGED
SITE PLAN

ISSUE	DATE	DESCRIPTION	BY	CHKD.	APP.

HNTB
300 APOLLO DRIVE
CHELMSFORD, MA 01824
(978) 905-4000

PROJECT MANAGER 5/30/12 Date

MASSACHUSETTS BAY TRANSPORTATION AUTHORITY
APPROVED BY:
PROJECT MANAGER 6/30/12 Date

Lozano, Baskin, and Associates, Inc.
Architecture•Urban Design•City Planning
205 Mt. Auburn St. Watertown, MA 02472

HORIZ: N/A
VERT: N/A
DATE: 05/17/12

DES. BY	DR. BY	CHK. BY
MB DW	DW	MB

PLAN NO. 168569

SHEET A-1.3

ISSUE

FILE NAME: C:\Documents and Settings\Mackintosh LBA\local settings\temp\AcPublish_7644\ 00 A-SP0002.dwg
PLOT DATE: May 16, 2012 – 3:25pm

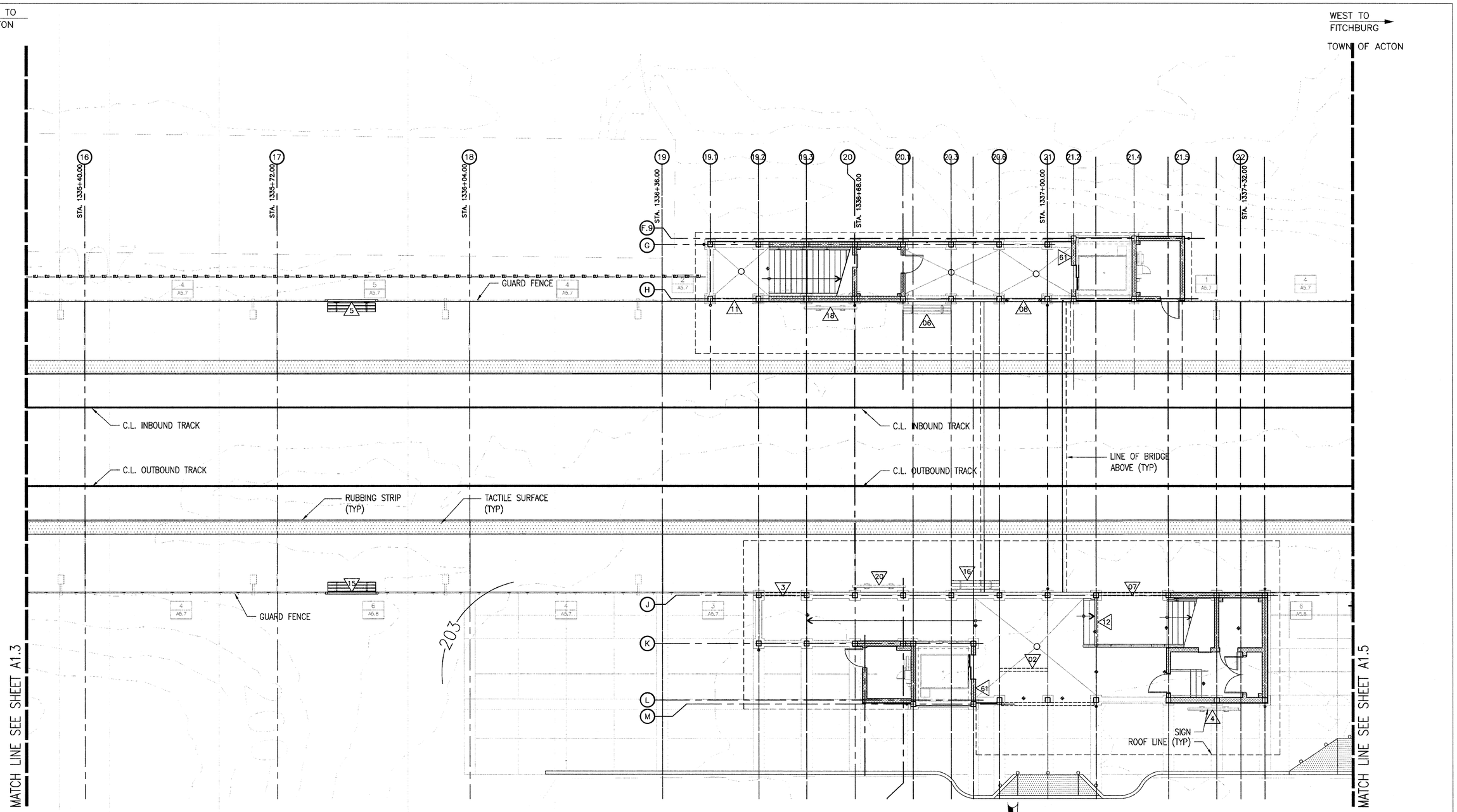

1 ENLARGED SITE PLAN
1/8"=1'-0"

NOTES:
1. SEE A-6.1 FOR SIGN SCHEDULE.
2. SEE CIVIL DWGS FOR SITE LAYOUT.
3. SEE DWGS A-8.1 FOR LANDSCAPE.

PROJECT NORTH

0 4 8 16
SCALE: 1/4"=1'-0"

MASSACHUSETTS BAY TRANSPORTATION AUTHORITY

FITCHBURG COMMUTER RAIL LINE
IMPROVEMENT PROJECT
CONTRACT NO. G67PS01

SOUTH ACTON STATION
ENLARGED
SITE PLAN

ISSUE	DATE	DESCRIPTION	BY	CHKD.	APP.

HNTB
300 APOLLO DRIVE
CHELMSFORD, MA 01824
(978) 905-4000

PROJECT MANAGER 5/16/12 Date

MASSACHUSETTS BAY TRANSPORTATION AUTHORITY
APPROVED BY:
PROJECT MANAGER 6/30/12 Date

Lozano, Baskin, and Associates, Inc.
Architecture•Urban Design•City Planning
205 Mt. Auburn St. Watertown, MA 02472

HORIZ: N/A	DES. BY	DR. BY	CHK. BY
VERT: N/A	MB DW	DW	MB
DATE: 05/17/12			

PLAN NO. 168570
SHEET A-1.4
ISSUE

FILE NAME: C:\Documents and Settings\Mackintosh LBA\local settings\temp\AcPublish_764\ 00 A-SP0002.dwg
PLOT DATE: May 16, 2012 - 3:26pm

EAST TO BOSTON

WEST TO FITCHBURG

TOWN OF ACTON

STA. 1,337+84.00 (23)

STA. 1,337+96.00 (24)

STA. 1,338+28.00 (25)

STA. 1,338+60.00 (26)

GUARD FENCE

4.5% SLOPE

EGRESS WALKWAY

C.L. INBOUND TRACK

C.L. OUTBOUND TRACK

RUBBING STRIP (TYP)

TACTILE SURFACE (TYP)

GUARD FENCE

Sloped Walkway

Drop-off / Pick-up

MATCH LINE SEE SHEET A1.4

FOR DETAILS OF DROP OFF AREA SEE SHEET C-15

1 ENLARGED SITE PLAN
1/8"=1'-0"

NOTES:
1. SEE A-6.1 FOR SIGN SCHEDULE.
2. SEE CIVIL DWGS FOR SITE LAYOUT.
3. SEE DWGS A-8.1 FOR LANDSCAPE.

PROJECT NORTH

0 4 8 16

SCALE: 1/4"=1'-0"

ISSUE	DATE	DESCRIPTION	BY	CHKD.	APP.

Lozano, Baskin, and Associates, Inc.
Architecture•Urban Design•City Planning
205 Mt. Auburn St. Watertown, MA 02472

MASSACHUSETTS BAY TRANSPORTATION AUTHORITY

FITCHBURG COMMUTER RAIL LINE
IMPROVEMENT PROJECT
CONTRACT NO. G67PS01

SOUTH ACTON STATION
ENLARGED
SITE PLAN

HNTB
300 APOLLO DRIVE
CHELMSFORD, MA 01824
(978) 905-4000

PROJECT MANAGER 5/30/12 Date

MASSACHUSETTS BAY TRANSPORTATION AUTHORITY
APPROVED BY:
PROJECT MANAGER 6/30/12 Date

HORIZ: N/A
VERT: N/A
DATE: 05/17/12

DES. BY	DR. BY	CHK. BY
MB DW	DW	MB

PLAN NO. 168571

SHEET A-1.5

ISSUE

FILE NAME: C:\Documents and Settings\Mackintosh LBA\local settings\temp\AcPublish_764\ 00 A-SP0002.dwg
PLOT DATE: May 16, 2012 - 3:26pm

EAST TO BOSTON

WEST TO FITCHBURG

TOWN OF ACTON

MAPLE STREET

FOR PAINTED SURFACE AND OTHER DETAILS REFER TO SHEET C-13

BENCH/WINDSCREEN

TRASH RECEPTICAL

200

201

202

203

204

STA. 1331+56.00

STA. 1331+98.00

STA. 1332+22.00

STA. 1332+38.00

STA. 1332+52.00

STA. 1332+84.00

STA. 1333+18.00

MATCH LINE SEE SHEET A1.6

GUARD FENCE

SIMILAR AND OPPOSITE

MATCH LINE SEE SHEET A1.1 MATCH LINE SEE SHEET A1.2

1 ENLARGED SITE PLAN
1/8"=1'-0"

NOTES:
1. SEE A-6.1 FOR SIGN SCHEDULE.
2. SEE CIVIL DWGS FOR SITE LAYOUT.
3. SEE DWGS A-8.1 FOR LANDSCAPE.

PROJECT NORTH

SCALE: 1/4"=1'-0"

MASSACHUSETTS BAY TRANSPORTATION AUTHORITY

FITCHBURG COMMUTER RAIL LINE IMPROVEMENT PROJECT CONTRACT NO. G67PS01

SOUTH ACTON STATION
ENLARGED
SITE PLAN

HNTB 300 APOLLO DRIVE CHELMSFORD, MA 01824 (978) 905-4000

PROJECT MANAGER 5/30/12 Date

MASSACHUSETTS BAY TRANSPORTATION AUTHORITY APPROVED BY: PROJECT MANAGER 10/30/12 Date

ISSUE	DATE	DESCRIPTION	BY	CHKD.	APP.

Lozano, Baskin, and Associates, Inc.
Architecture•Urban Design•City Planning
205 Mt. Auburn St. Watertown, MA 02472

HORIZ: N/A
VERT: N/A
DATE: 05/17/12

DES. BY	DR. BY	CHK. BY
MB DW	DW	MB

PLAN NO. 168572

SHEET A-1.6

ISSUE

FILE NAME: C:\Documents and Settings\Mackintosh LBA\local settings\temp\AcPublish_764\ 00 A-SP0002.dwg
PLOT DATE: May 16, 2012 - 3:26pm

MATCH LINE SEE SHEET A2.2

℄ OUTBOUND TRACK 1

LINE OF BRIDGE ABOVE

5'-7"

WOOD RUBBING STRIP

TACTILE WARNING STRIP

ROOF LINE ABOVE

OUTBOUND PLATFORM

PROTECTIVE SCREEN (TYP THIS WALL)

PLATFORM GUARD FENCE

RAMP HANDRAIL EACH SIDE

PROTECTIVE SCREEN

RAMP LANDING AT PLATFORM LEVEL

206.47

UP

205.25

8'-0"

9'-4"

8"

DOWNSPOUT (TYP)

PROTECTIVE SCREEN (TYP THIS WALL)

ELEV CNTRL RM

PIT LADDER

ELEV.

CMU WALL

SUSPENDED SIGN ABOVE

LOBBY

FLOOR DRAIN

STAIR HANDRAIL (TYP)

206.64

STAIR LANDING AT PLATFORM LEVEL

206.69

STAIR HANDRAIL

STAIR GUARD FENCE AND HANDRAIL

ACCESS PANEL

205.40

204.25

8" CMU WALL

MBTA COMM ROOM

METAL CLADDING (TYP)

2'-7"

TOWN COMM CLOSET

8" CMU THIS WALL

STEEL WINDOW (TYP AT ELEVATOR SHAFT)

SUMP PIT

PROTECTIVE SCREEN

HSS COLUMN (TYP) SEE STRUCTURAL DRAWINGS

ROOF LINE ABOVE

8'-0"

16'-0" | 8'-0" | 8'-0" | 8'-0" | 6'-4" | 3'-8" | 4'-4" | 8'-0" | 8'-0" | 12'-0" | 8'-0" | 4'-0" | 4'-0"

19 | 19.2 | 19.3 | 20 | 20.1 | 20.2 | 20.3 | 20.4 | 20.6 | 21 | 21.3 | 21.5 | 21.6 | 22 | 22.1

FOR 12'-0" CROSSWALK AND OTHER DROP OFF AREA DETAILS SEE SITE PLAN SHEET C-15

NOTE: FLOORS TO SLOPE DOWN TO FLOOR DRAINS 1/8" PER 1'-0" (TYP)

1 PLAN DETAIL
1/4" = 1'-0"

PROJECT NORTH

0 2 4 8
SCALE: 1/4" = 1'-0"

ISSUE	DATE	DESCRIPTION	BY	CHKD.	APP.

Lozano, Baskin, and Associates, Inc.
Architecture•Urban Design•City Planning
205 Mt. Auburn St. Watertown, MA 02472

MASSACHUSETTS BAY TRANSPORTATION AUTHORITY

FITCHBURG COMMUTER RAIL LINE
IMPROVEMENT PROJECT
CONTRACT NO. G67PS01

SOUTH ACTON STATION
FIRST FLOOR PLAN
OUTBOUND HEAD HOUSE

HNTB
300 APOLLO DRIVE
CHELMSFORD, MA 01824
(978) 905-4000

PROJECT MANAGER — Date

MASSACHUSETTS BAY TRANSPORTATION AUTHORITY
APPROVED BY:
PROJECT MANAGER — Date 6/30/12

HORIZ: N/A
VERT: N/A
DATE: 05/17/12

DES. BY	DR. BY	CHK. BY
MB DW	DW	MB

PLAN NO. 168573

SHEET A-2.1

ISSUE

FILE NAME: C:\Documents and Settings\Mackintosh LBA\local settings\temp\AcPublish_544\ 01 A-FP0001.dwg
PLOT DATE: May 17, 2012 – 12:01pm

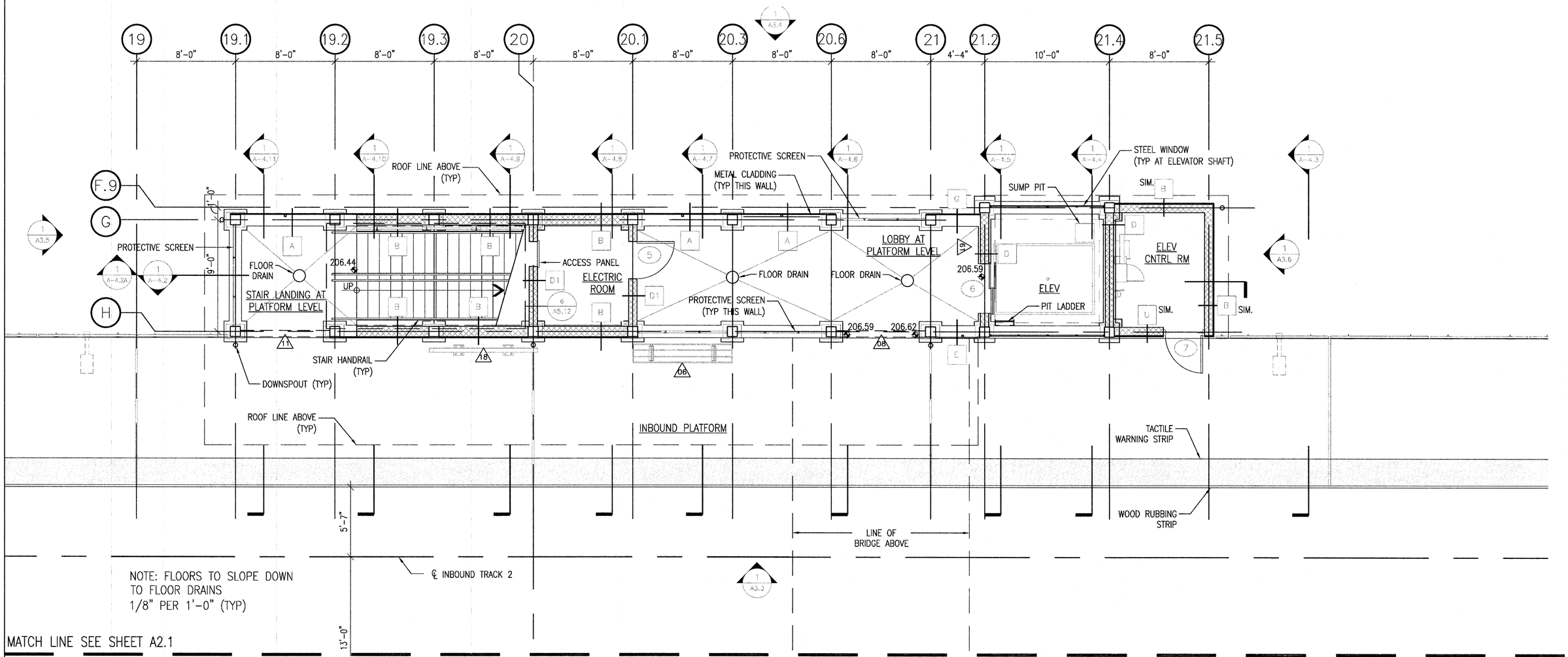

1 PLAN DETAIL
1/4" = 1'-0"

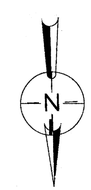

SCALE: 1/4" = 1'-0"

ISSUE	DATE	DESCRIPTION	BY	CH'KD.	APP.

Lozano, Baskin, and Associates, Inc.
Architecture•Urban Design•City Planning
205 Mt. Auburn St. Watertown, MA 02472

REGISTERED ARCHITECT No.4453 BOSTON, MA COMMONWEALTH OF MASSACHUSETTS

MASSACHUSETTS BAY TRANSPORTATION AUTHORITY

FITCHBURG COMMUTER RAIL LINE
IMPROVEMENT PROJECT
CONTRACT NO. G67PS01

SOUTH ACTON STATION
FIRST FLOOR PLAN
INBOUND HEAD HOUSE

HNTB
300 APOLLO DRIVE
CHELMSFORD, MA 01824
(978) 905-4000

PROJECT MANAGER 5/30/12 Date

MASSACHUSETTS BAY TRANSPORTATION AUTHORITY
APPROVED BY:
PROJECT MANAGER 6/30/12 Date

HORIZ: N/A	DES. BY	DR. BY	CHK. BY	PLAN NO. 168574	ISSUE
VERT: N/A	MB DW	DW	MB		
DATE: 05/17/12				SHEET A-2.2	

FILE NAME: C:\Documents and Settings\Mackintosh LBA\local settings\temp\AcPublish_544\ 01 A-FP0001.dwg
PLOT DATE: May 17, 2012 – 12:01pm

MATCH LINE SEE SHEET A2.4

℄ OUTBOUND TRACK 1

SLAB SLOPE 1/8"/FT

STEEL WINDOW (TYP AT BRIDGE AND BRIDGE ENDS)

PROTECTIVE SCREEN (TYP AT BRIDGE AND BRIDGE ENDS)

224.51

BRIDGE

EDGE OF PLATFORM BELOW

SLAB SLOPE 1/8"/FT

STEEL WINDOW SYSTEM METAL CLADDING (TYP)

224.43

TRENCH DRAIN (TYP)

GUARD FENCE

212.48

DN STAIR LANDING AT PLATFORM LEVEL BELOW

METAL ROOF BELOW (TYP)

STAIR LANDING

UPPER LOBBY

ELEV.

STAIR LANDING 217.15

212.48

DN

224.43

STEEL WINDOW (TYP AT ELEVATOR SHAFT)

METAL CLADDING (TYP)

STEEL WINDOW

HP LP

8'-0" 8'-0" 8'-0" 6'-4" 3'-8" 2'-1" 2'-3" 8'-0" 2'-3" 5'-9" 12'-0" 8'-0" 4'-0" 4'-0"

19 19.2 19.3 20 20.1 20.2 20.3 20.4 20.5 20.6 21 21.1 21.3 21.5 21.6 22 22.1

J K L M

1 PLAN DETAIL
1/4" = 1'-0"

PROJECT NORTH

0 2 4 8
SCALE: 1/4" = 1'-0"

ISSUE	DATE	DESCRIPTION	BY	CHKD.	APP.

Lozano, Baskin, and Associates, Inc.
Architecture•Urban Design•City Planning
205 Mt. Auburn St. Watertown, MA 02472

HNTB
300 APOLLO DRIVE
CHELMSFORD, MA 01824
(978) 905-4000

PROJECT MANAGER 5/30/12 Date

MASSACHUSETTS BAY TRANSPORTATION AUTHORITY
APPROVED BY: PROJECT MANAGER 6/30/12 Date

HORIZ: N/A
VERT: N/A
DATE: 05/17/12

DES. BY	DR. BY	CHK. BY
MB DW	DW	MB

PLAN NO. 168575
SHEET A-2.3
ISSUE

MASSACHUSETTS BAY TRANSPORTATION AUTHORITY
FITCHBURG COMMUTER RAIL LINE
IMPROVEMENT PROJECT
CONTRACT NO. G67PS01

SOUTH ACTON STATION
SECOND FLOOR PLAN
OUTBOUND HEAD HOUSE

FILE NAME: C:\Documents and Settings\Mackintosh LBA\local settings\temp\AcPublish_544\ 01 A-FP0001.dwg
PLOT DATE: May 17, 2012 – 12:01pm

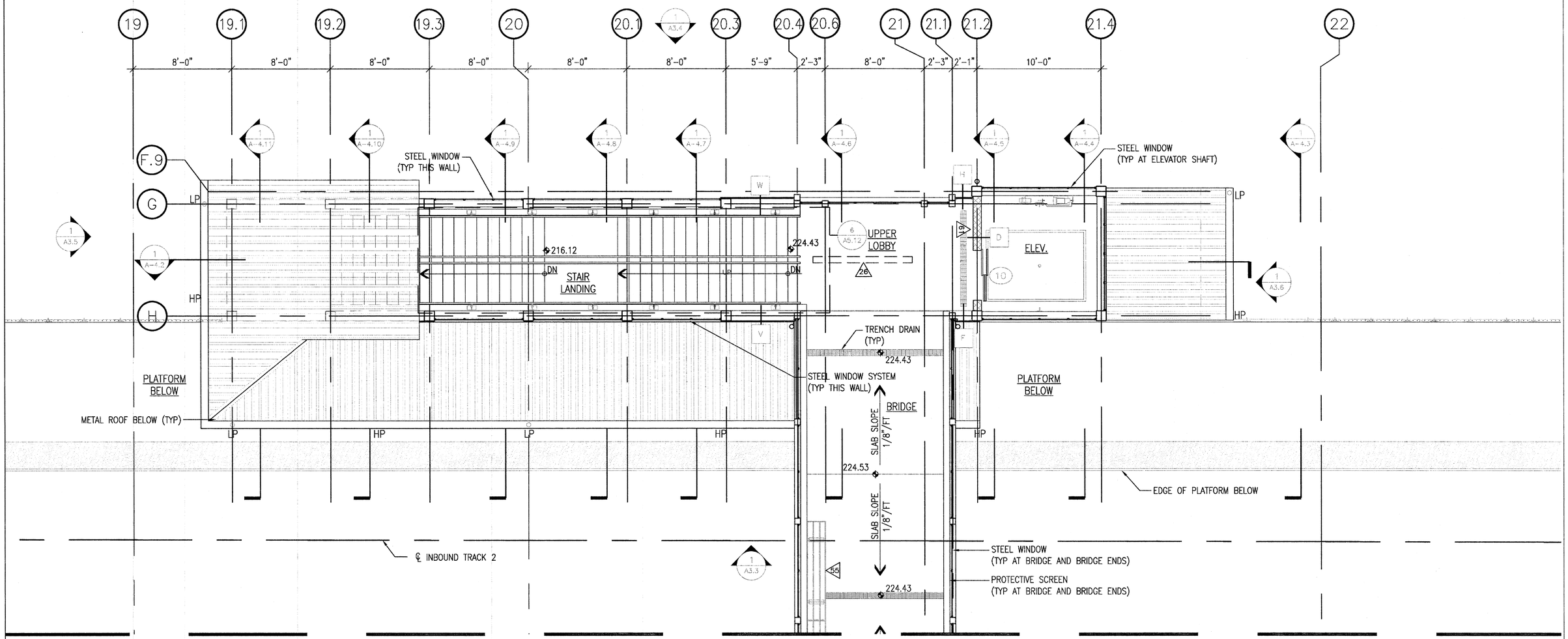

1 PLAN DETAIL
1/4" = 1'-0"

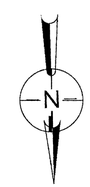

MASSACHUSETTS BAY TRANSPORTATION AUTHORITY

FITCHBURG COMMUTER RAIL LINE
IMPROVEMENT PROJECT
CONTRACT NO. G67PS01

SOUTH ACTON STATION
SECOND FLOOR PLAN
INBOUND HEAD HOUSE

ISSUE	DATE	DESCRIPTION	BY	CHKD.	APP.

HNTB
300 APOLLO DRIVE
CHELMSFORD, MA 01824
(978) 905-4000

PROJECT MANAGER — Date 5/30/12

MASSACHUSETTS BAY TRANSPORTATION AUTHORITY
APPROVED BY:
PROJECT MANAGER — Date 5/30/12

Lozano, Baskin, and Associates, Inc.
Architecture•Urban Design•City Planning
205 Mt. Auburn St. Watertown, MA 02472

HORIZ: N/A	DES. BY	DR. BY	CHK. BY
VERT: N/A	MB DW	DW	MB
DATE: 05/17/12			

PLAN NO. 168576
SHEET A-2.4
ISSUE

FILE NAME: C:\Documents and Settings\Mackintosh LBA\local settings\temp\AcPublish_544\ 01 A-FP0001.dwg
PLOT DATE: May 17, 2012 – 12:01pm

MATCH LINE SEE SHEET A2.6

℄ OUTBOUND TRACK 1

BRIDGE ROOF

CRICKET

HIGH HEAD HOUSE ROOF

MID HEAD HOUSE ROOF

LOW HEAD HOUSE ROOF

FULL CANOPY ROOF

HALF CANOPY ROOF

HP

LP

SCUPPER BOX

GUTTER (TYP)

ELEVATOR SHAFT ROOF

CRICKET

J

K

L

M

19 19.2 19.3 20 20.1 20.2 20.3 20.4 20.6 21 21.3 21.5 21.6 22 22.1

1 ROOF PLAN
1/4" = 1'-0"

PROJECT NORTH

SCALE: 1/4" = 1'-0"

ISSUE	DATE	DESCRIPTION	BY	CHKD.	APP.

MASSACHUSETTS BAY TRANSPORTATION AUTHORITY

FITCHBURG COMMUTER RAIL LINE
IMPROVEMENT PROJECT
CONTRACT NO. G67PS01

SOUTH ACTON STATION
ROOF PLAN
OUTBOUND HEAD HOUSE

HNTB
300 APOLLO DRIVE
CHELMSFORD, MA 01824
(978) 905-4000

PROJECT MANAGER 5/16/12 Date

MASSACHUSETTS BAY TRANSPORTATION AUTHORITY
APPROVED BY:
PROJECT MANAGER 6/30/12 Date

Lozano, Baskin, and Associates, Inc.
Architecture•Urban Design•City Planning
205 Mt. Auburn St. Watertown, MA 02472

HORIZ: N/A
VERT: N/A
DATE: 05/17/12

DES. BY	DR. BY	CHK. BY
MB DW	DW	MB

PLAN NO. 168577

SHEET A-2.5

ISSUE

FILE NAME: C:\Documents and Settings\Mackintosh LBA\local settings\temp\AcPublish_544\ 01 A-FP0001.dwg
PLOT DATE: May 17, 2012 – 12:01pm

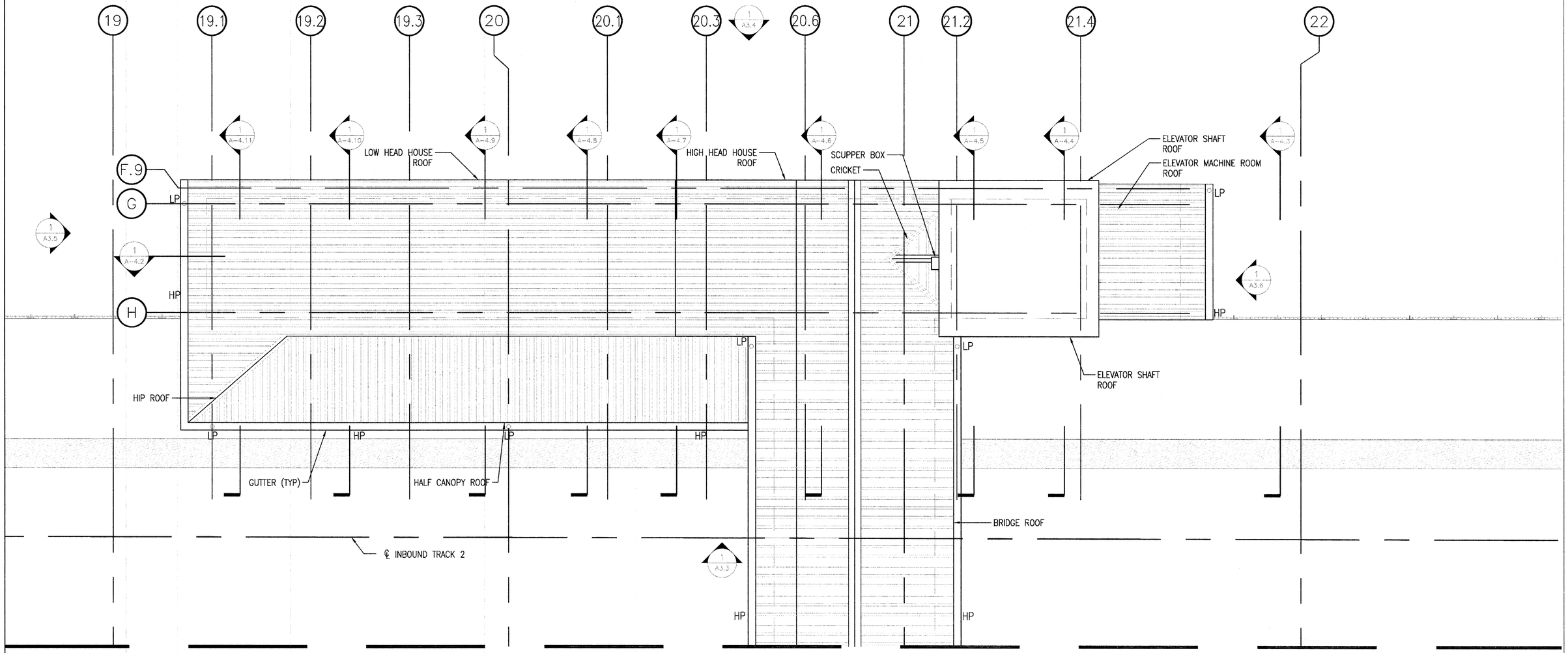

1 ROOF PLAN
1/4" = 1'-0"

PROJECT NORTH

0 2 4 8
SCALE: 1/4" = 1'-0"

ISSUE	DATE	DESCRIPTION	BY	CHKD.	APP.

Lozano, Baskin, and Associates, Inc.
Architecture•Urban Design•City Planning
205 Mt. Auburn St. Watertown, MA 02472

MASSACHUSETTS BAY TRANSPORTATION AUTHORITY

FITCHBURG COMMUTER RAIL LINE
IMPROVEMENT PROJECT
CONTRACT NO. G67PS01

SOUTH ACTON STATION
ROOF PLAN
INBOUND HEAD HOUSE

HNTB
300 APOLLO DRIVE
CHELMSFORD, MA 01824
(978) 905-4000

PROJECT MANAGER 5/30/12 Date

MASSACHUSETTS BAY TRANSPORTATION AUTHORITY
APPROVED BY: 6/30/12
PROJECT MANAGER Date

HORIZ: N/A	DES. BY MB	DR. BY DW	CHK. BY MB	PLAN NO. 168578
VERT: N/A				
DATE: 05/17/12				SHEET A-2.6

ISSUE

FILE NAME: C:\Documents and Settings\Mackintosh LBA\local settings\temp\AcPublish_544\ 01 A-FP0001.dwg
PLOT DATE: May 17, 2012 – 12:01pm

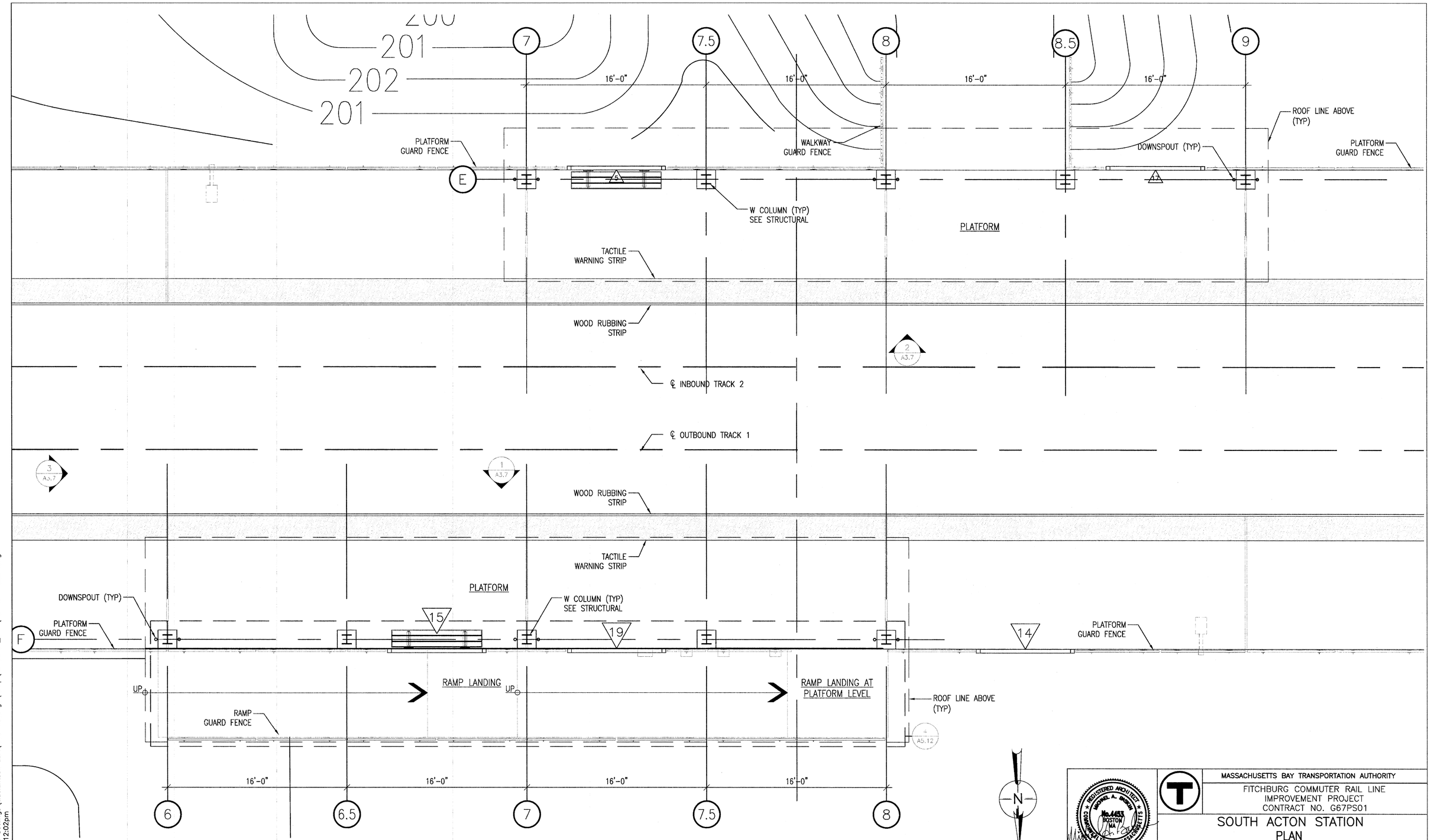

1 PLAN
1/4" = 1'-0"

FILE NAME: C:\Documents and Settings\Mackintosh LBA\local settings\temp\AcPublish_544\ 01 A-FP0001.dwg
PLOT DATE: May 17, 2012 – 12:02pm

ISSUE	DATE	DESCRIPTION	BY	CHKD.	APP.

Lozano, Baskin, and Associates, Inc.
Architecture•Urban Design•City Planning
205 Mt. Auburn St. Watertown, MA 02472

HNTB
300 APOLLO DRIVE
CHELMSFORD, MA 01824
(978) 905-4000

PROJECT MANAGER — Date 5/30/12

MASSACHUSETTS BAY TRANSPORTATION AUTHORITY
APPROVED BY: PROJECT MANAGER — Date 6/30/12

HORIZ: N/A	DES. BY	DR. BY	CHK. BY
VERT: N/A	MB	DW	MB
DATE: 05/17/12	DW		

PLAN NO. 168579
SHEET A-2.7
ISSUE

MASSACHUSETTS BAY TRANSPORTATION AUTHORITY
FITCHBURG COMMUTER RAIL LINE
IMPROVEMENT PROJECT
CONTRACT NO. G67PS01

SOUTH ACTON STATION
PLAN
PLATFORM CANOPY

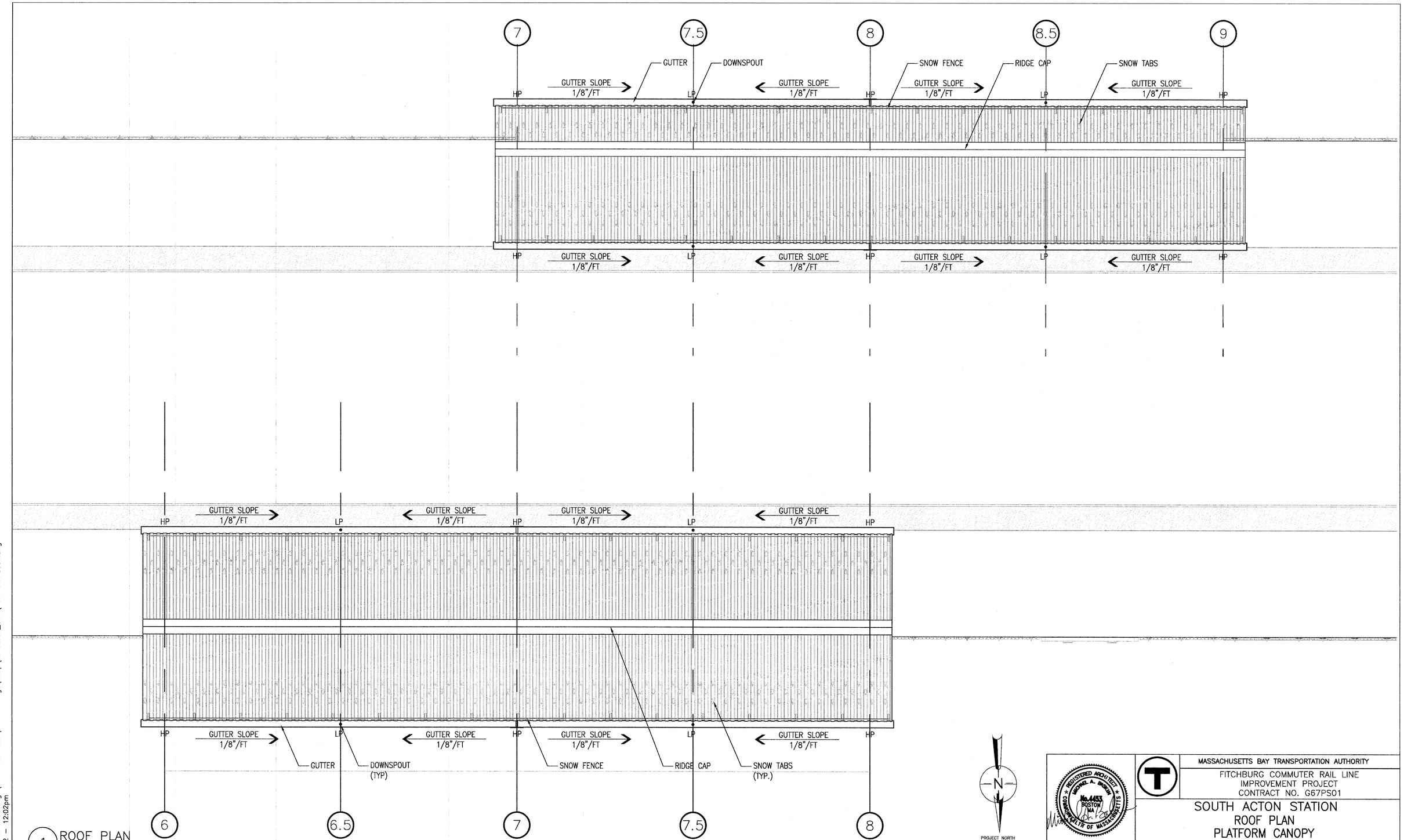

1 ROOF PLAN
1/4" = 1'-0"

FILE NAME: C:\Documents and Settings\Mackintosh LBA\local settings\temp\AcPublish_544\ 01 A-FP0001.dwg
PLOT DATE: May 17, 2012 – 12:02pm

ISSUE	DATE	DESCRIPTION	BY	CHKD.	APP.

Lozano, Baskin, and Associates, Inc.
Architecture•Urban Design•City Planning
205 Mt. Auburn St. Watertown, MA 02472

REGISTERED ARCHITECT MICHAEL A. BASKIN No.4457 BOSTON MA COMMONWEALTH OF MASSACHUSETTS

MASSACHUSETTS BAY TRANSPORTATION AUTHORITY

FITCHBURG COMMUTER RAIL LINE
IMPROVEMENT PROJECT
CONTRACT NO. G67PS01

SOUTH ACTON STATION
ROOF PLAN
PLATFORM CANOPY

HNTB
300 APOLLO DRIVE
CHELMSFORD, MA 01824
(978) 905-4000

PROJECT MANAGER — Date 5/30/12

MASSACHUSETTS BAY TRANSPORTATION AUTHORITY
APPROVED BY: PROJECT MANAGER — Date 6/30/12

HORIZ: N/A
VERT: N/A
DATE: 05/17/12

DES. BY	DR. BY	CHK. BY
MB DW	DW	MB

PLAN NO. 168580
SHEET A-2.8
ISSUE

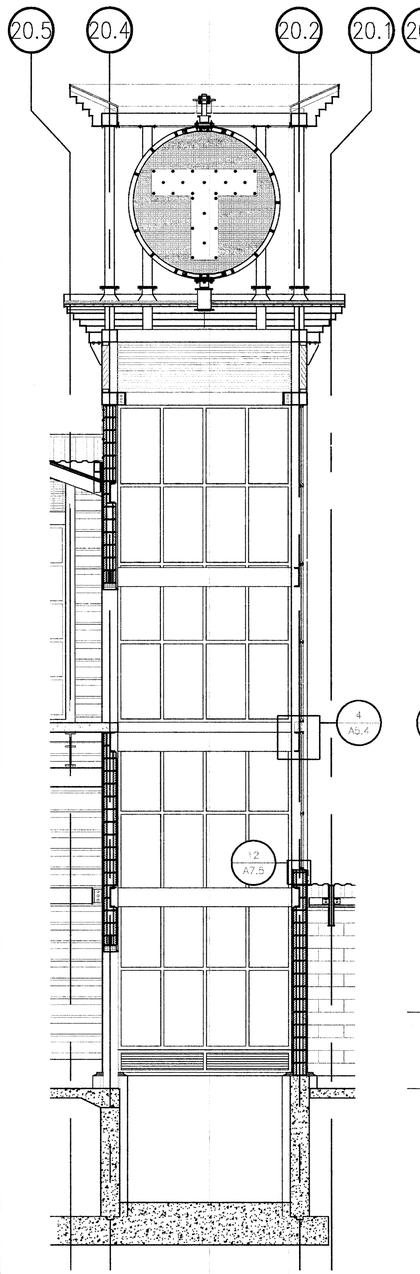

4 SECTION: ELEVATOR SHAFT
1/4" = 1'-0"

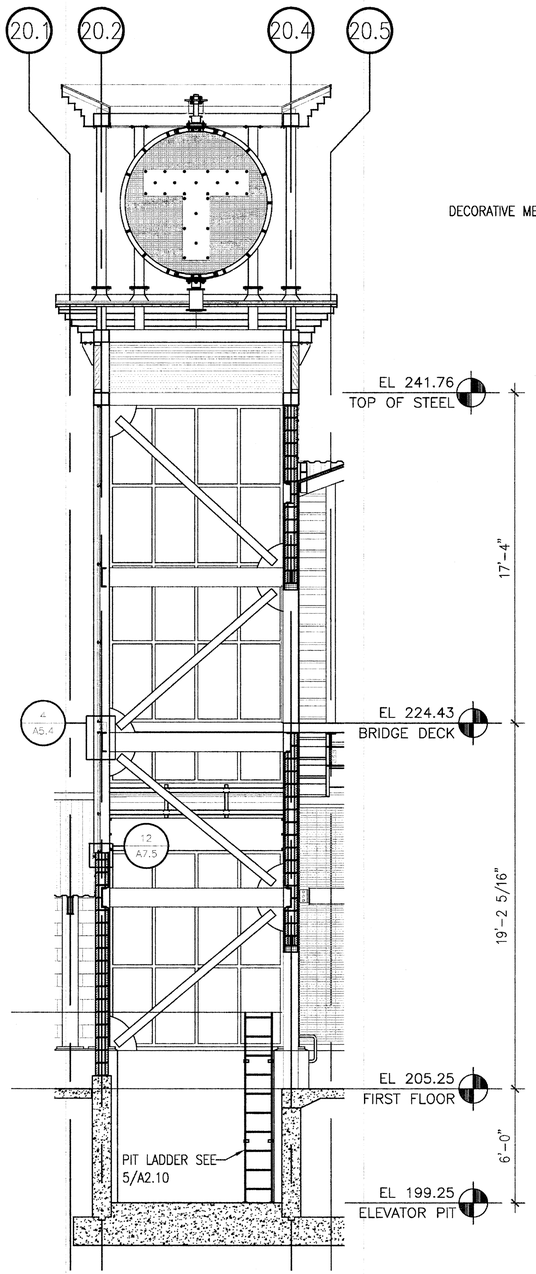

3 SECTION: ELEVATOR SHAFT
1/4" = 1'-0"

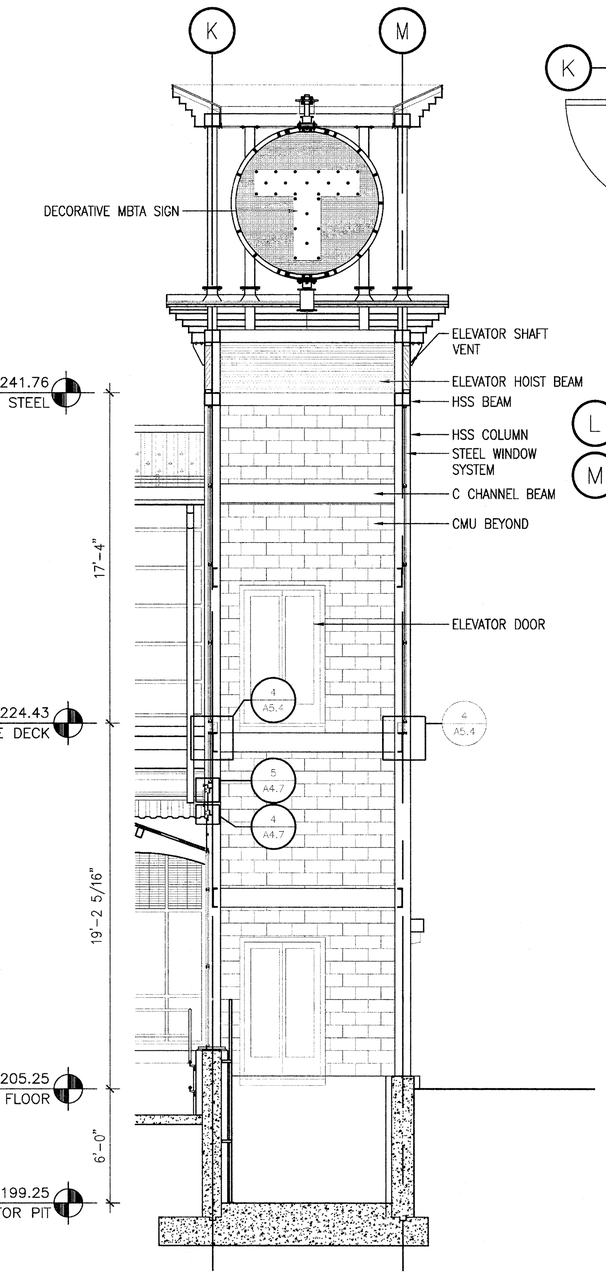

2 SECTION: ELEVATOR SHAFT
1/4" = 1'-0"

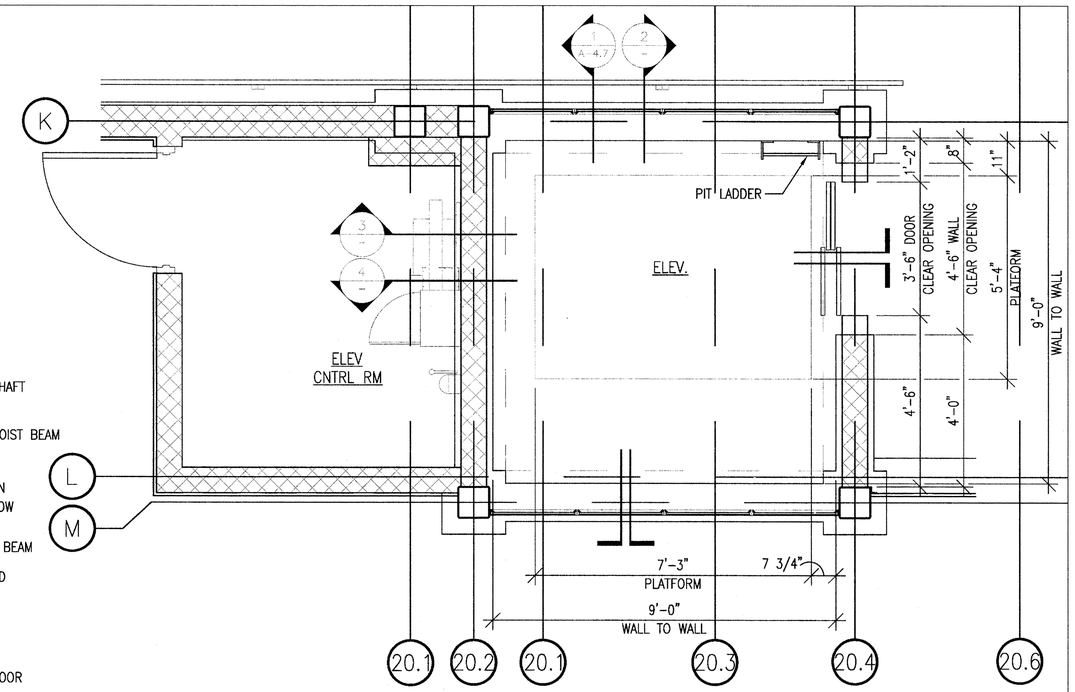

1 ENLARGED FLOOR PLAN
1/2" = 1'-0"

NOTE:
ELEVATORS SHALL COMPLY WITH MBTA ELEVATOR DESIGN STANDARD REV. 8 5/17/2011.
DESIGN DIMENSIONS FOR MRL SINGLE ENTRY (TWO SPEED SIDE SLIDE DOOR) ADA COMPLIANT.

PROJECT NORTH

SCALE: 1/4" = 1'-0"

ISSUE	DATE	DESCRIPTION	BY	CHKD.	APP.

Lozano, Baskin, and Associates, Inc.
Architecture•Urban Design•City Planning
205 Mt. Auburn St. Watertown, MA 02472

REGISTERED ARCHITECT MICHAEL A. BASKIN No.4453 BOSTON MA COMMONWEALTH OF MASSACHUSETTS

MASSACHUSETTS BAY TRANSPORTATION AUTHORITY

FITCHBURG COMMUTER RAIL LINE
IMPROVEMENT PROJECT
CONTRACT NO. G67PS01

SOUTH ACTON STATION
ENLARGED FLOOR PLAN AND SECTIONS
OUTBOUND HEAD HOUSE ELEVATOR

HNTB
300 APOLLO DRIVE
CHELMSFORD, MA 01824
(978) 905-4000

PROJECT MANAGER 5/30/12 Date

MASSACHUSETTS BAY TRANSPORTATION AUTHORITY
APPROVED BY:
PROJECT MANAGER 6/30/12 Date

HORIZ: N/A	DES. BY	DR. BY	CHK. BY	PLAN NO. 168581	ISSUE
VERT: N/A	MB	DW	MB		
DATE: 05/17/12	DW			SHEET A-2.9	

FILE NAME: C:\Documents and Settings\Mackintosh LBA\local settings\temp\AcPublish_544\ 01 A-FP0001.dwg
PLOT DATE: May 17, 2012 - 12:02pm

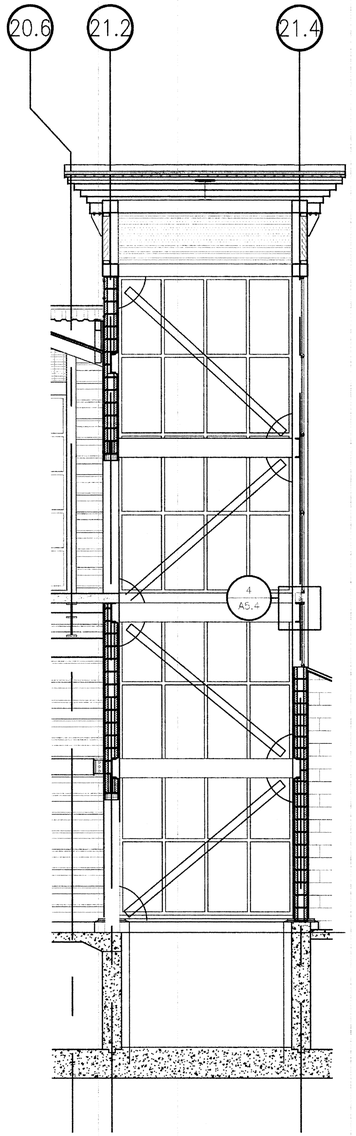

4 SECTION: ELEVATOR SHAFT
1/4" = 1'-0"

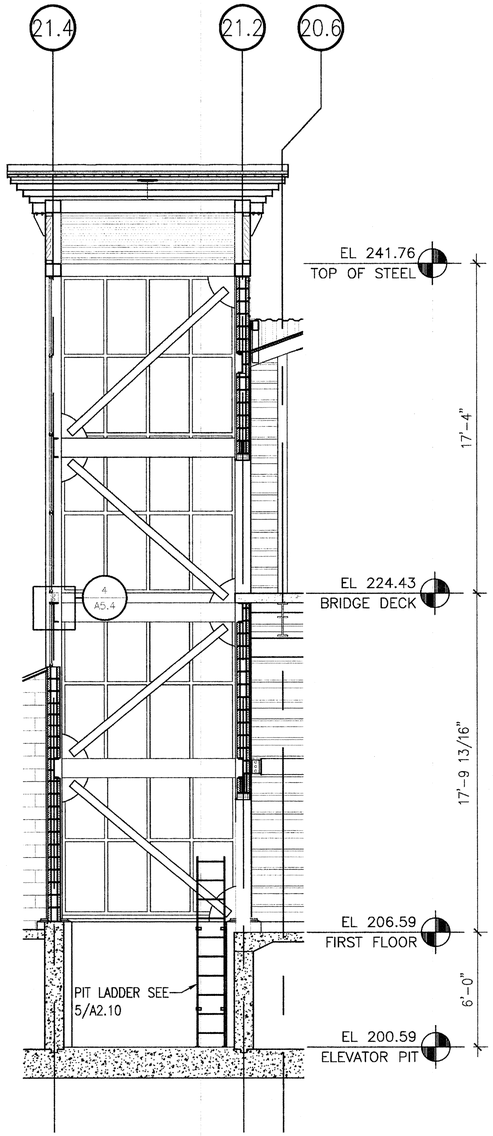

3 SECTION: ELEVATOR SHAFT
1/4" = 1'-0"

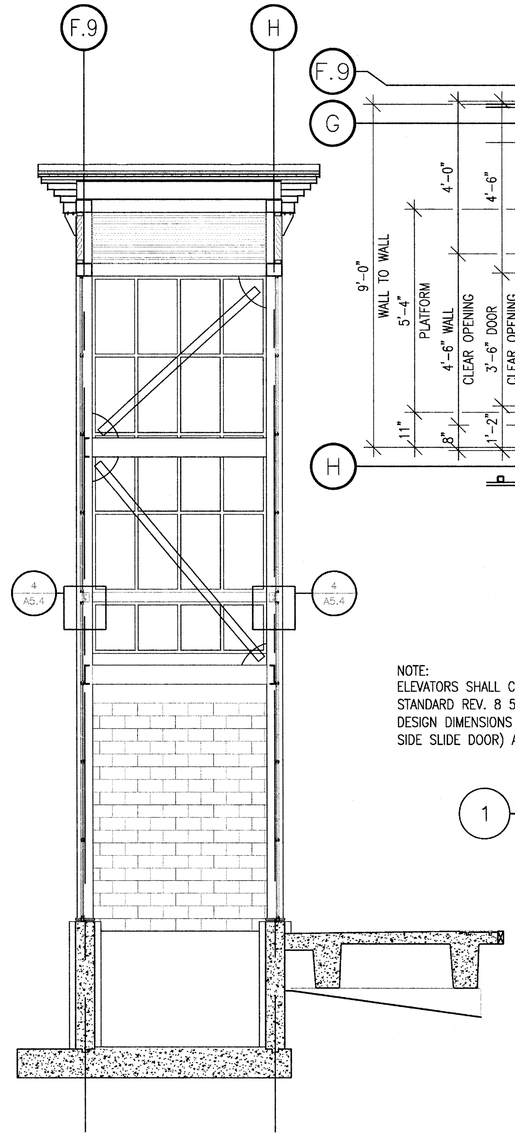

2 SECTION: ELEVATOR SHAFT
1/4" = 1'-0"

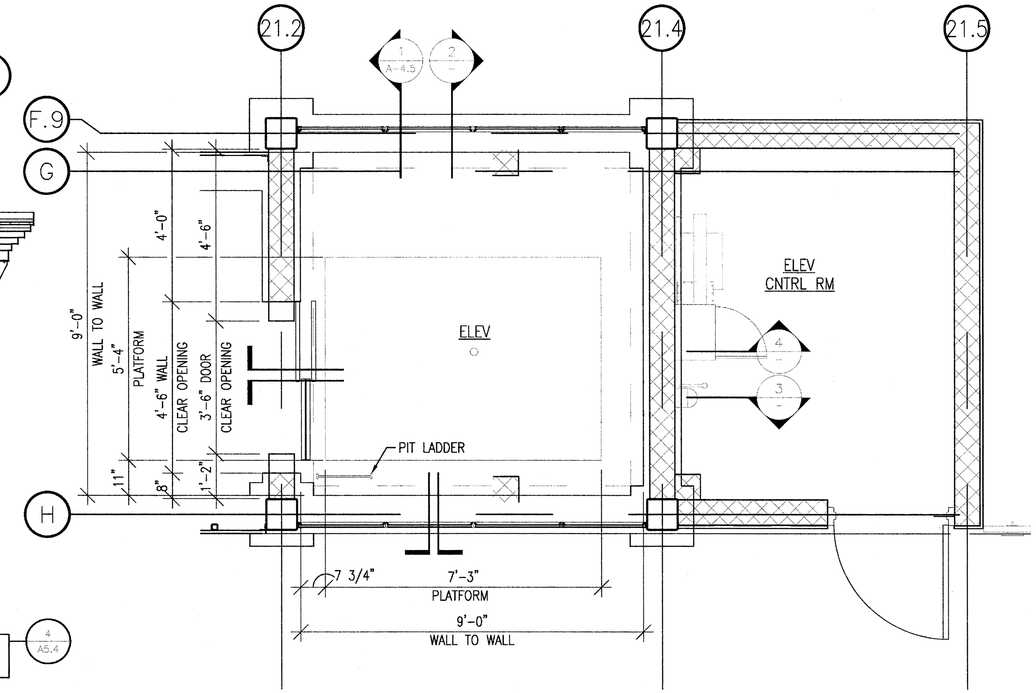

NOTE:
ELEVATORS SHALL COMPLY WITH MBTA ELEVATOR DESIGN STANDARD REV. 8 5/17/2011.
DESIGN DIMENSIONS FOR MRL SINGLE ENTRY (TWO SPEED SIDE SLIDE DOOR) ADA COMPLIANT.

1 ENLARGED FLOOR PLAN
1/2" = 1'-0"

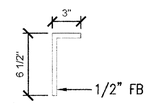

SUPPORT TAB

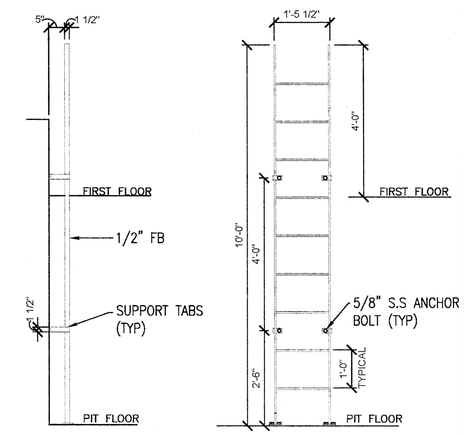

5 ELEVATOR PIT LADDER
1/2" = 1'-0"

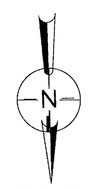

PROJECT NORTH

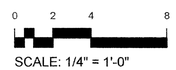

SCALE: 1/4" = 1'-0"

REGISTERED ARCHITECT
MICHAEL A. BASKIN
No. 4455
BOSTON
MA
COMMONWEALTH OF MASSACHUSETTS

MASSACHUSETTS BAY TRANSPORTATION AUTHORITY

FITCHBURG COMMUTER RAIL LINE
IMPROVEMENT PROJECT
CONTRACT NO. G67PS01

SOUTH ACTON STATION
ENLARGED FLOOR PLAN AND SECTIONS
OUTBOUND HEAD HOUSE ELEVATOR

ISSUE	DATE	DESCRIPTION	BY	CHKD.	APP.

Lozano, Baskin, and Associates, Inc.
Architecture•Urban Design•City Planning
205 Mt. Auburn St. Watertown, MA 02472

HNTB
300 APOLLO DRIVE
CHELMSFORD, MA 01824
(978) 905-4000

PROJECT MANAGER — Date: 5/30/12

MASSACHUSETTS BAY TRANSPORTATION AUTHORITY
APPROVED BY:
PROJECT MANAGER — Date: 6/30/12

HORIZ: N/A	DES. BY	DR. BY	CHK. BY	PLAN NO. 168582	ISSUE
VERT: N/A	MB DW	DW	MB		
DATE: 05/17/12				SHEET A-2.10	

FILE NAME: C:\Documents and Settings\Mackintosh LBA\local settings\temp\AcPublish_544\ 01 A-FP0001.dwg
PLOT DATE: May 17, 2012 – 12:03pm

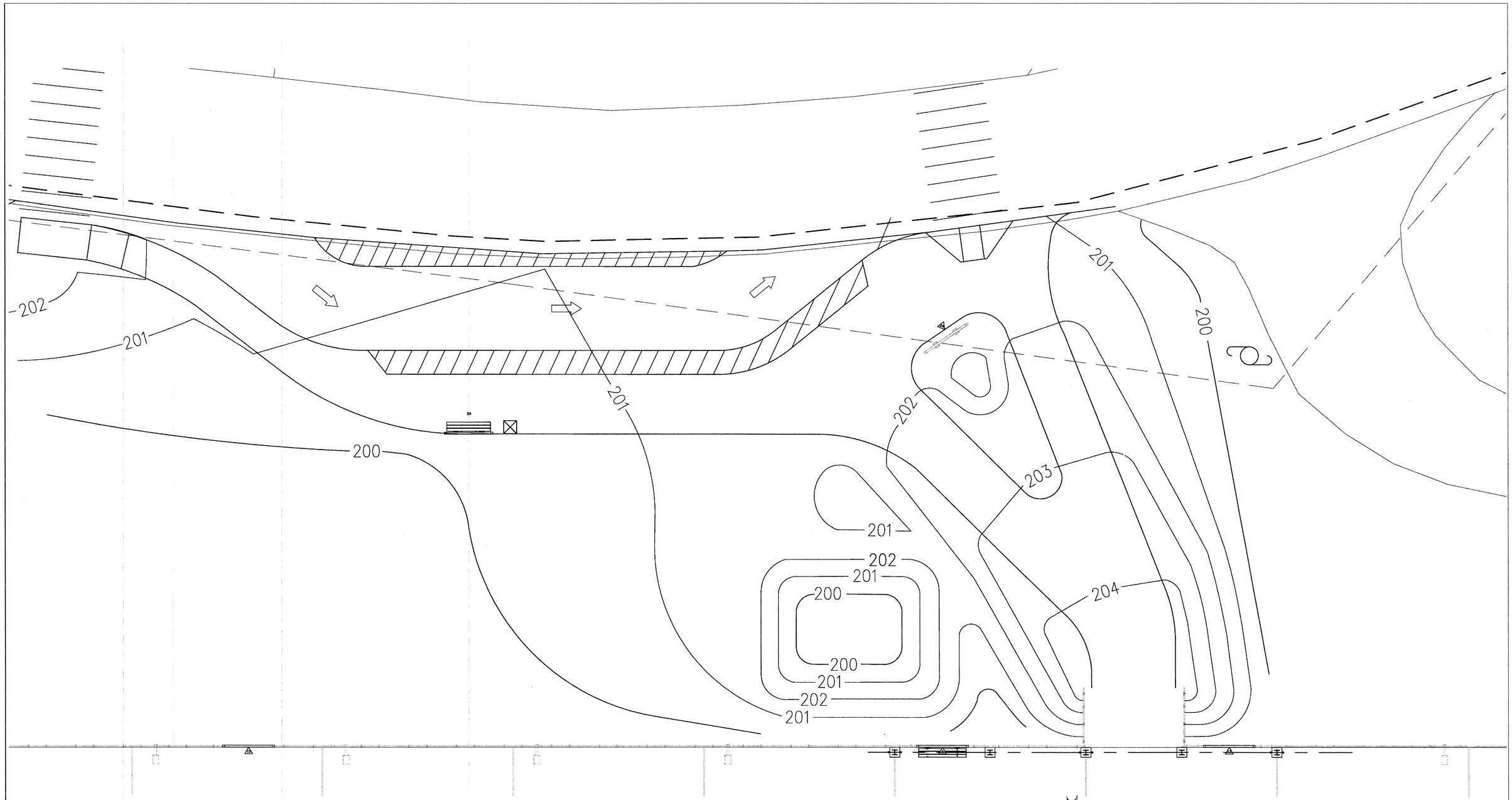

1 PLAN
1/4" = 1'-0"

PROJECT NORTH

MASSACHUSETTS BAY TRANSPORTATION AUTHORITY

FITCHBURG COMMUTER RAIL LINE
IMPROVEMENT PROJECT
CONTRACT NO. G67PS01

SOUTH ACTON STATION
PLAZA PLAN
MAPLE STREET ENTRY

REGISTERED ARCHITECT MICHAEL A. BASKIN No.4453 BOSTON MA COMMONWEALTH OF MASSACHUSETTS

ISSUE	DATE	DESCRIPTION	BY	CHKD.	APP.

HNTB
300 APOLLO DRIVE
CHELMSFORD, MA 01824
(978) 905-4000

PROJECT MANAGER 5/30/12 Date

MASSACHUSETTS BAY TRANSPORTATION AUTHORITY
APPROVED BY:
PROJECT MANAGER 6/30/12 Date

Lozano, Baskin, and Associates, Inc.
Architecture•Urban Design•City Planning
205 Mt. Auburn St. Watertown, MA 02472

HORIZ: N/A	DES. BY	DR. BY	CHK. BY
VERT: N/A	MB DW	DW	MB
DATE: 05/17/12			

PLAN NO. 168583

SHEET A-2.11

ISSUE

FILE NAME: C:\Documents and Settings\Mackintosh LBA\local settings\temp\AcPublish_544\ 01 A-FP0001.dwg
PLOT DATE: May 17, 2012 – 12:03pm

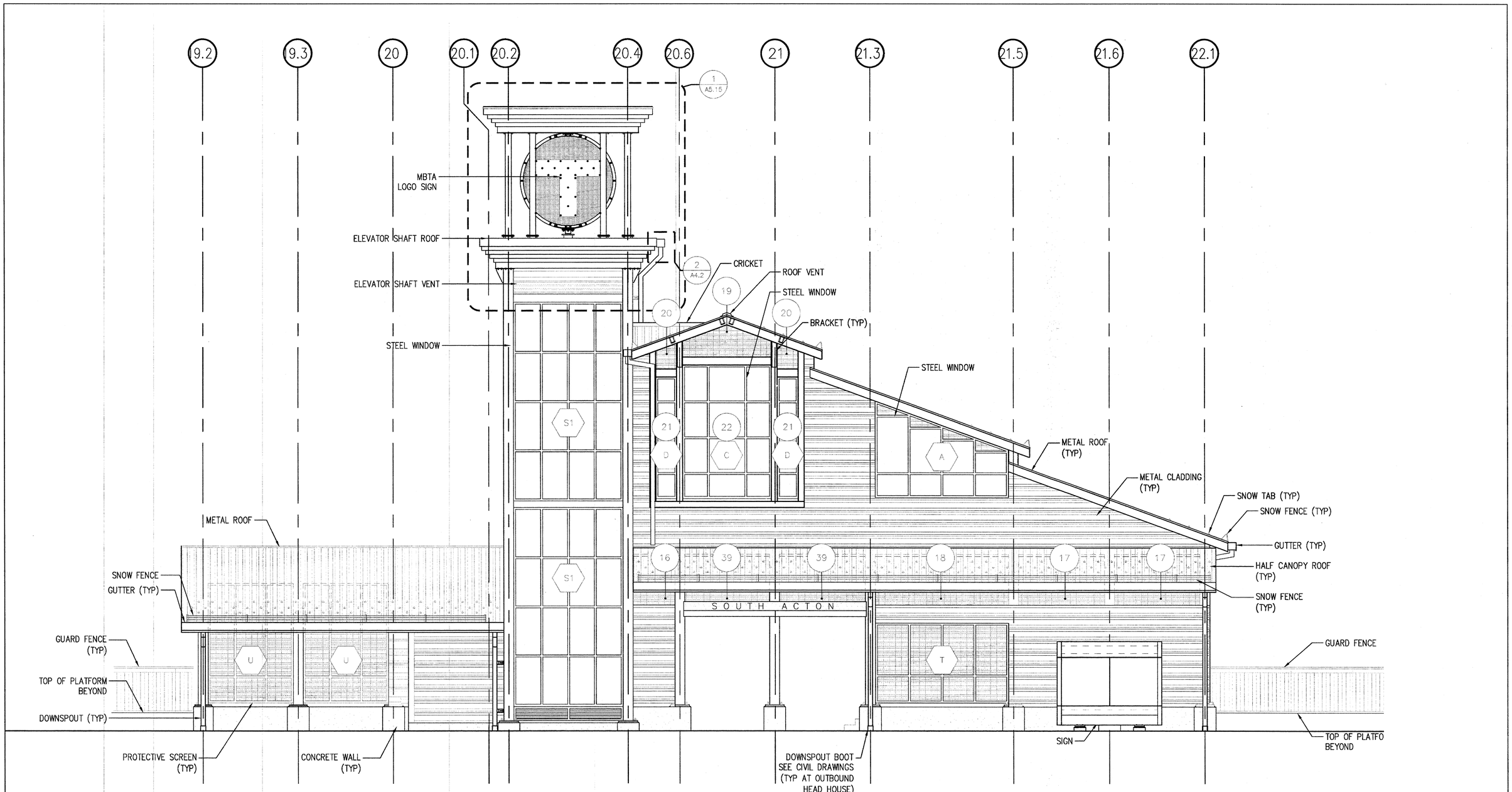

1 ELEVATION
1/4" = 1'-0"

0 2 4 8
SCALE: 1/4" = 1'-0"

MASSACHUSETTS BAY TRANSPORTATION AUTHORITY

FITCHBURG COMMUTER RAIL LINE
IMPROVEMENT PROJECT
CONTRACT NO. G67PS01

SOUTH ACTON STATION
NORTH ELEVATION
OUTBOUND HEAD HOUSE

REGISTERED ARCHITECT
MICHAEL A. BROWN
No. 4453
BOSTON, MA
COMMONWEALTH OF MASSACHUSETTS

ISSUE	DATE	DESCRIPTION	BY	CHKD.	APP.

Lozano, Baskin, and Associates, Inc.
Architecture•Urban Design•City Planning
205 Mt. Auburn St. Watertown, MA 02472

HNTB
300 APOLLO DRIVE
CHELMSFORD, MA 01824
(978) 905-4000

PROJECT MANAGER — Date 5/30/12

MASSACHUSETTS BAY TRANSPORTATION AUTHORITY
APPROVED BY:
PROJECT MANAGER — Date 6/30/12

HORIZ: N/A	DES. BY	DR. BY	CHK. BY	PLAN NO. 168584	ISSUE
VERT: N/A	MB DW	DW	MB		
DATE: 05/17/12				SHEET A-3.1	

FILE NAME: C:\Documents and Settings\Mackintosh LBA\local settings\temp\AcPublish_544\ 02 A-EL0001.dwg
PLOT DATE: May 17, 2012 – 12:03pm

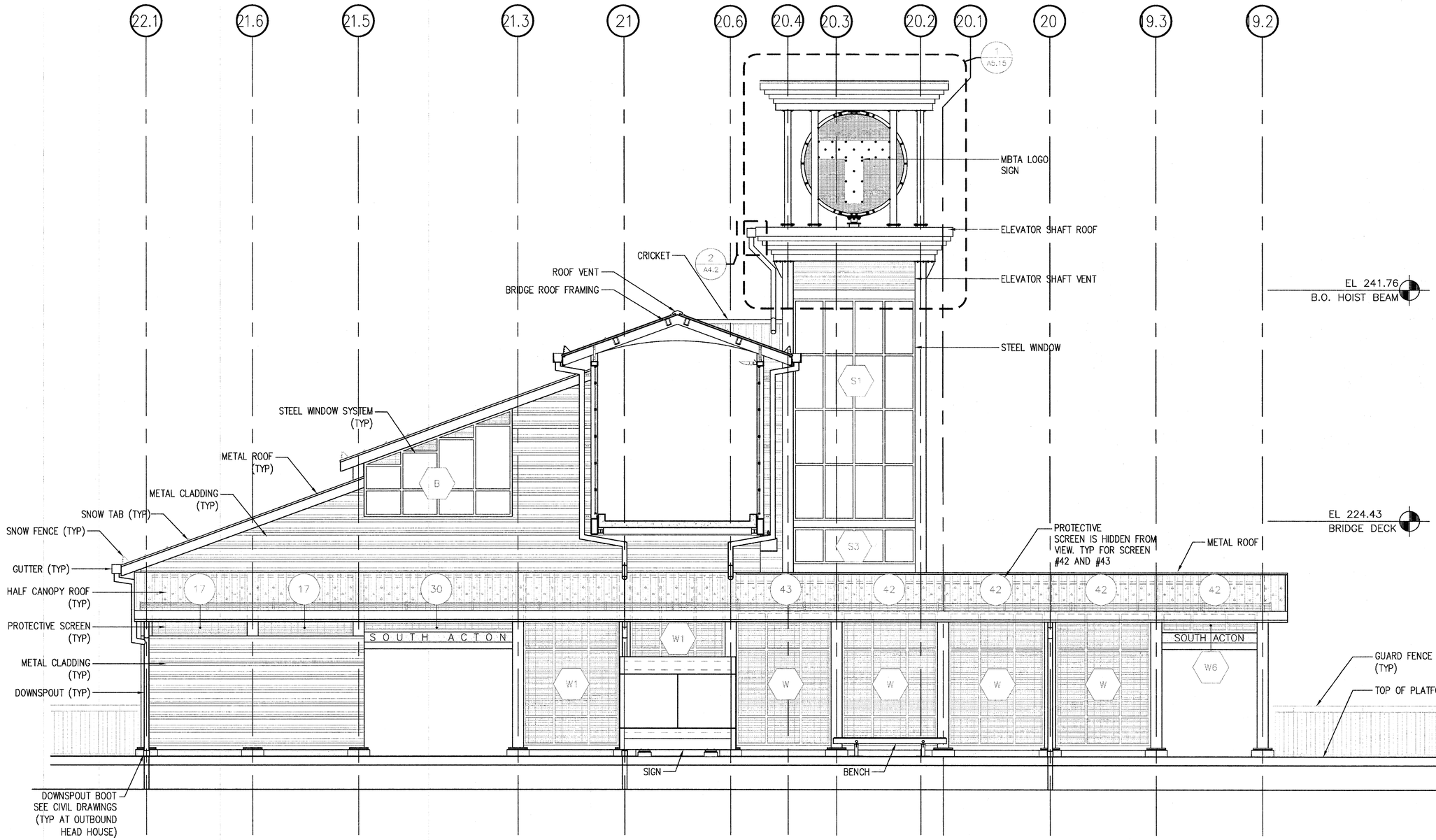

1 ELEVATION
1/4" = 1'-0"

0 2 4 8
SCALE: 1/4" = 1'-0"

FILE NAME: C:\Documents and Settings\Mackintosh LBA\local settings\temp\AcPublish_544\ 02 A-EL0001.dwg
PLOT DATE: May 17, 2012 – 12:03pm

REGISTERED ARCHITECT MANUEL A. BASKIN No.4453 BOSTON MA COMMONWEALTH OF MASSACHUSETTS

MASSACHUSETTS BAY TRANSPORTATION AUTHORITY

FITCHBURG COMMUTER RAIL LINE
IMPROVEMENT PROJECT
CONTRACT NO. G67PS01

SOUTH ACTON STATION
SOUTH ELEVATION
OUTBOUND HEAD HOUSE

ISSUE	DATE	DESCRIPTION	BY	CHKD.	APP.

HNTB
300 APOLLO DRIVE
CHELMSFORD, MA 01824
(978) 905-4000

PROJECT MANAGER 5/30/12 Date

MASSACHUSETTS BAY TRANSPORTATION AUTHORITY
APPROVED BY:
PROJECT MANAGER 6/30/12 Date

Lozano, Baskin, and Associates, Inc.
Architecture•Urban Design•City Planning
205 Mt. Auburn St. Watertown, MA 02472

HORIZ: N/A	DES. BY	DR. BY	CHK. BY
VERT: N/A	MB DW	DW	MB
DATE: 05/17/12			

PLAN NO. 168585
SHEET A-3.2
ISSUE

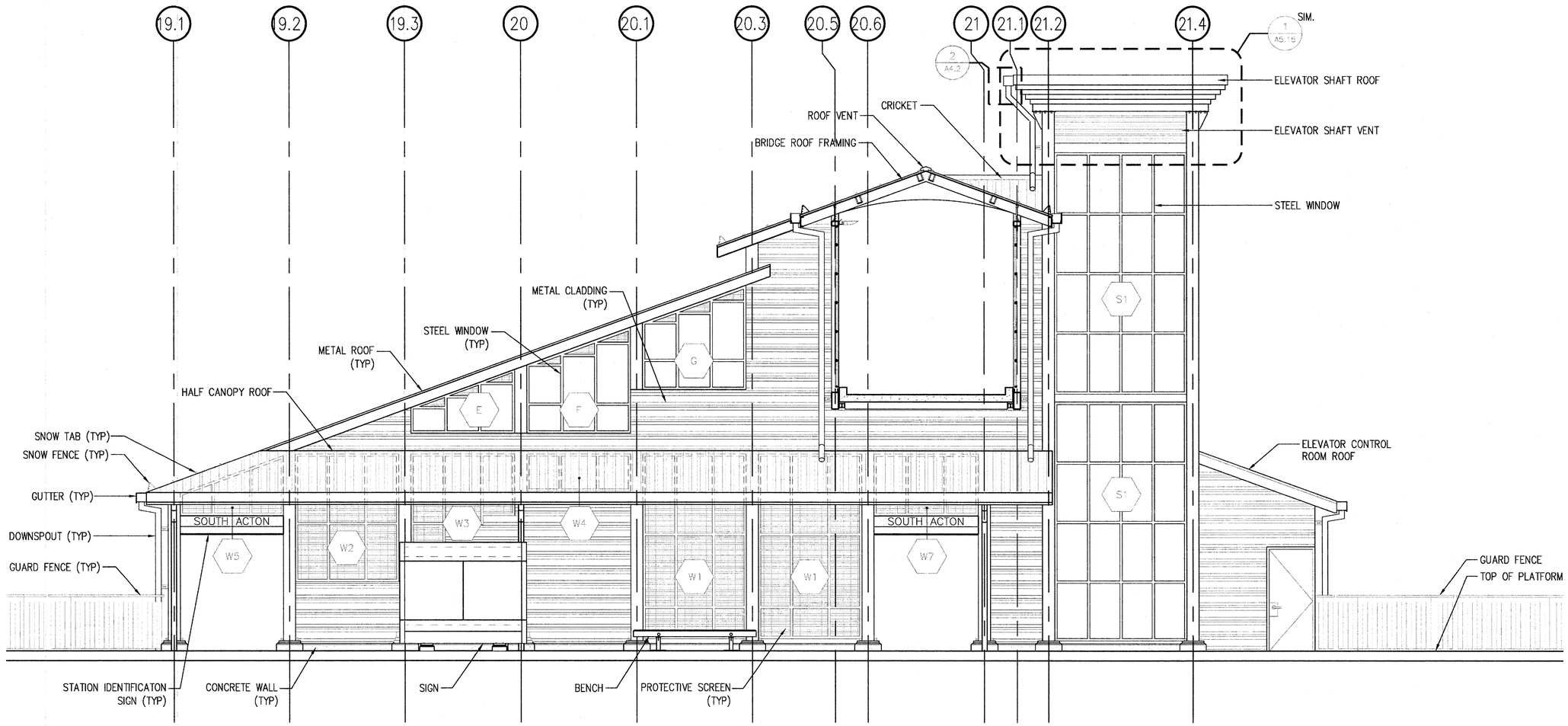

1 ELEVATION
1/4" = 1'-0"

0 2 4 8
SCALE: 1/4" = 1'-0"

ISSUE	DATE	DESCRIPTION	BY	CHKD.	APP.

REGISTERED ARCHITECT
MICHAEL A. BASKIN
No. 4453
BOSTON MA
COMMONWEALTH OF MASSACHUSETTS

MASSACHUSETTS BAY TRANSPORTATION AUTHORITY

FITCHBURG COMMUTER RAIL LINE
IMPROVEMENT PROJECT
CONTRACT NO. G67PS01

SOUTH ACTON STATION
NORTH ELEVATION
INBOUND HEAD HOUSE

HNTB
300 APOLLO DRIVE
CHELMSFORD, MA 01824
(978) 905-4000

PROJECT MANAGER — Date 5/30/12

MASSACHUSETTS BAY TRANSPORTATION AUTHORITY
APPROVED BY:
PROJECT MANAGER — Date 6/30/12

Lozano, Baskin, and Associates, Inc.
Architecture•Urban Design•City Planning
205 Mt. Auburn St. Watertown, MA 02472

HORIZ: N/A
VERT: N/A
DATE: 05/17/12

DES. BY	DR. BY	CHK. BY
MB DW	DW	MB

PLAN NO. 168586
SHEET A-3.3
ISSUE

FILE NAME: C:\Documents and Settings\Mackintosh LBA\local settings\temp\AcPublish_544\ 02 A-EL0001.dwg
PLOT DATE: May 17, 2012 – 12:03pm

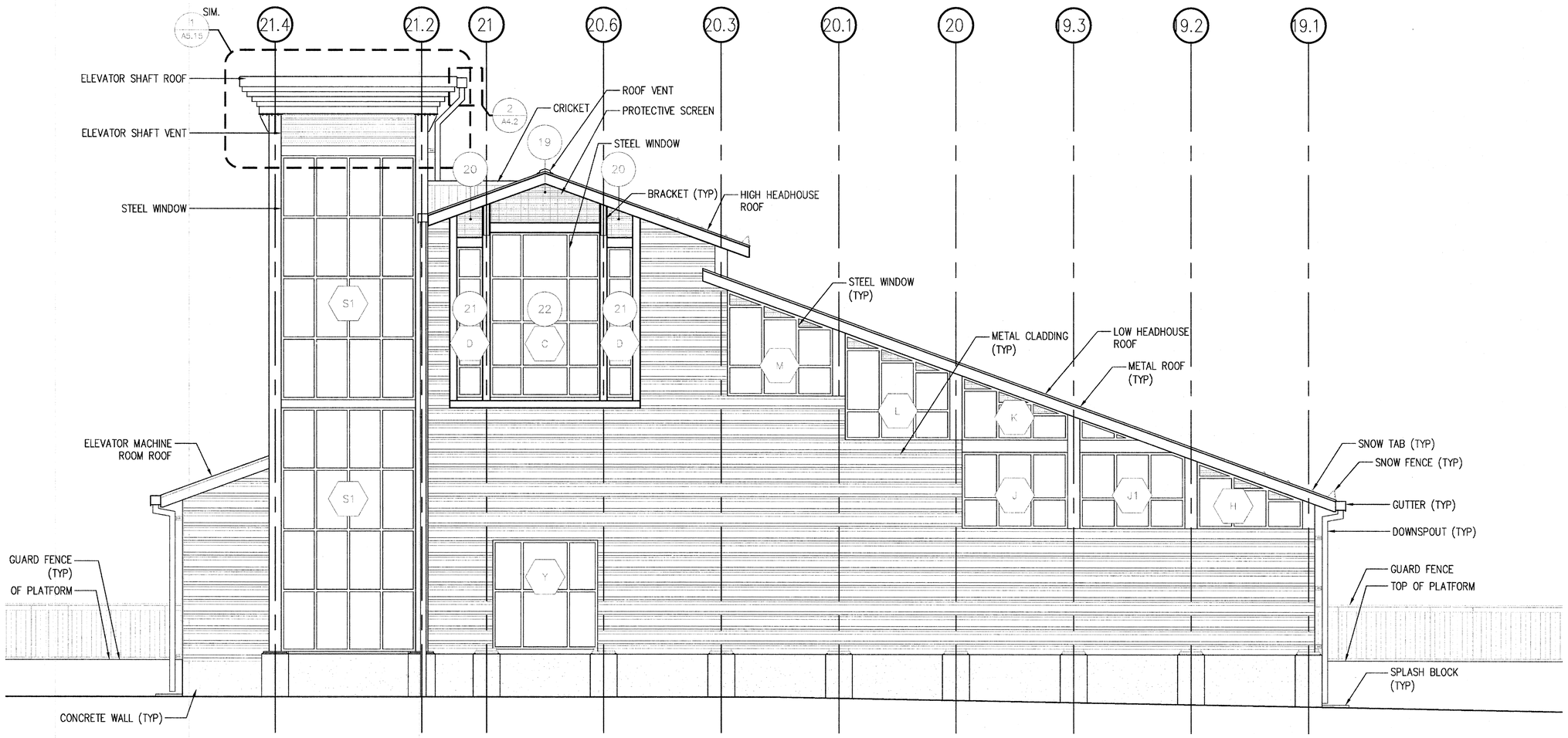

1 ELEVATION
1/4" = 1'-0"

0 2 4 8
SCALE: 1/4" = 1'-0"

MASSACHUSETTS BAY TRANSPORTATION AUTHORITY

FITCHBURG COMMUTER RAIL LINE
IMPROVEMENT PROJECT
CONTRACT NO. G67PS01

SOUTH ACTON STATION
SOUTH ELEVATION
INBOUND HEAD HOUSE

REGISTERED ARCHITECT
MICHAEL A. BASKIN
No. 4453
BOSTON, MA
COMMONWEALTH OF MASSACHUSETTS

ISSUE	DATE	DESCRIPTION	BY	CHKD.	APP.

HNTB
300 APOLLO DRIVE
CHELMSFORD, MA 01824
(978) 905-4000

PROJECT MANAGER 5/18/12 Date

MASSACHUSETTS BAY TRANSPORTATION AUTHORITY
APPROVED BY:
PROJECT MANAGER 6/30/12 Date

Lozano, Baskin, and Associates, Inc.
Architecture•Urban Design•City Planning
205 Mt. Auburn St. Watertown, MA 02472

	DES. BY	DR. BY	CHK. BY
HORIZ: N/A	MB	DW	MB
VERT: N/A	DW		
DATE: 05/17/12			

PLAN NO. 168587
SHEET A-3.4
ISSUE

FILE NAME: C:\Documents and Settings\Mackintosh LBA\local settings\temp\AcPublish_544\ 02 A-EL0001.dwg
PLOT DATE: May 17, 2012 - 12:03pm

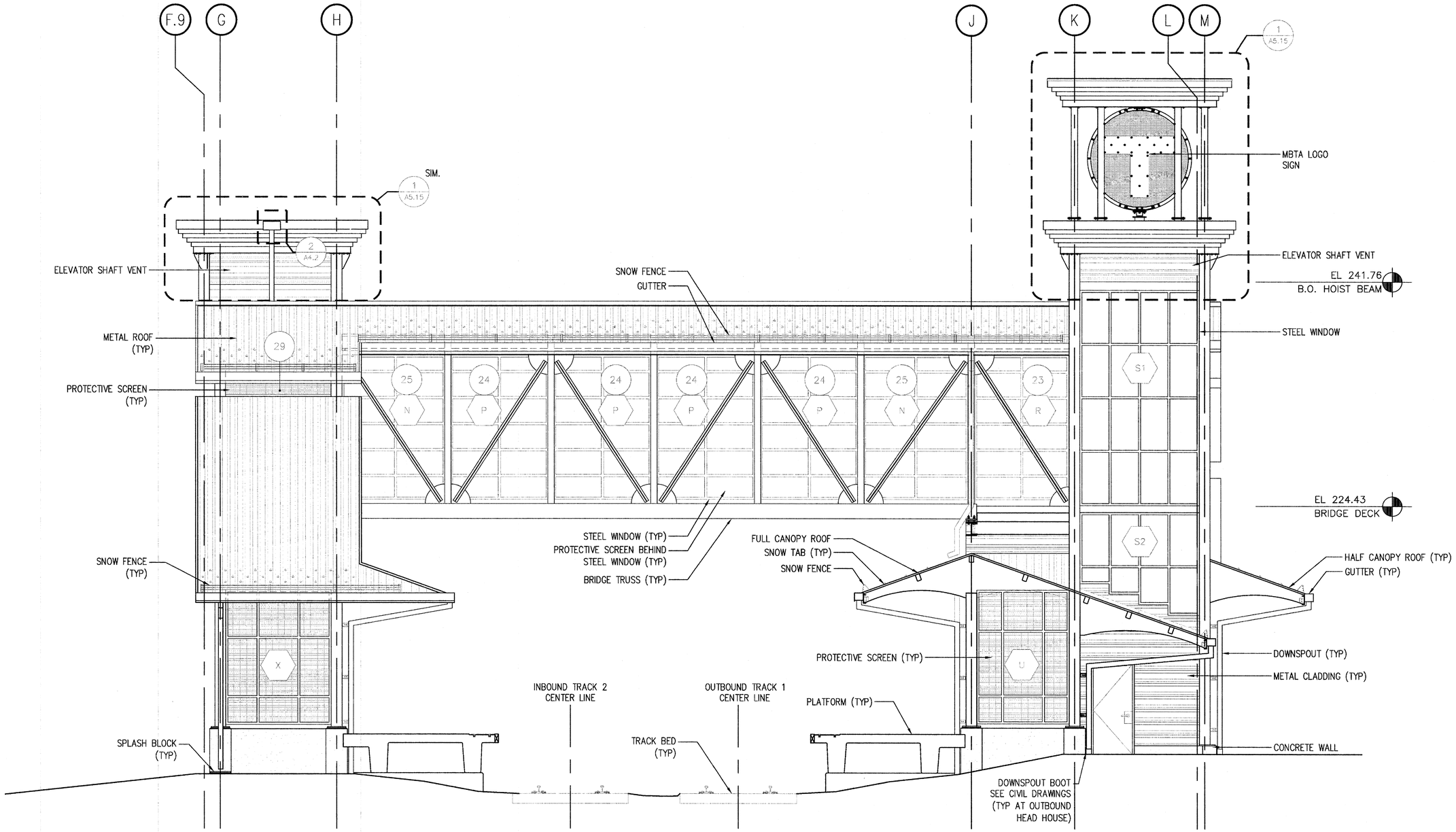

1 ELEVATION
1/4" = 1'-0"

0 2 4 8
SCALE: 1/4" = 1'-0"

MASSACHUSETTS BAY TRANSPORTATION AUTHORITY

FITCHBURG COMMUTER RAIL LINE
IMPROVEMENT PROJECT
CONTRACT NO. G67PS01

SOUTH ACTON STATION
EAST ELEVATION

REGISTERED ARCHITECT
MANUEL A. BASKIN
No. 4453
BOSTON, MA
COMMONWEALTH OF MASSACHUSETTS

ISSUE	DATE	DESCRIPTION	BY	CHKD.	APP.

HNTB
300 APOLLO DRIVE
CHELMSFORD, MA 01824
(978) 905-4000

PROJECT MANAGER 5/30/12 Date

MASSACHUSETTS BAY TRANSPORTATION AUTHORITY
APPROVED BY:
PROJECT MANAGER 6/20/12 Date

Lozano, Baskin, and Associates, Inc.
Architecture•Urban Design•City Planning
205 Mt. Auburn St. Watertown, MA 02472

HORIZ: N/A	DES. BY	DR. BY	CHK. BY	PLAN NO. 168588	ISSUE
VERT: N/A	MB DW	DW	MB		
DATE: 05/17/12				SHEET A-3.5	

FILE NAME: C:\Documents and Settings\Mackintosh LBA\local settings\temp\AcPublish_544\ 02 A-EL0001.dwg
PLOT DATE: May 17, 2012 – 12:03pm

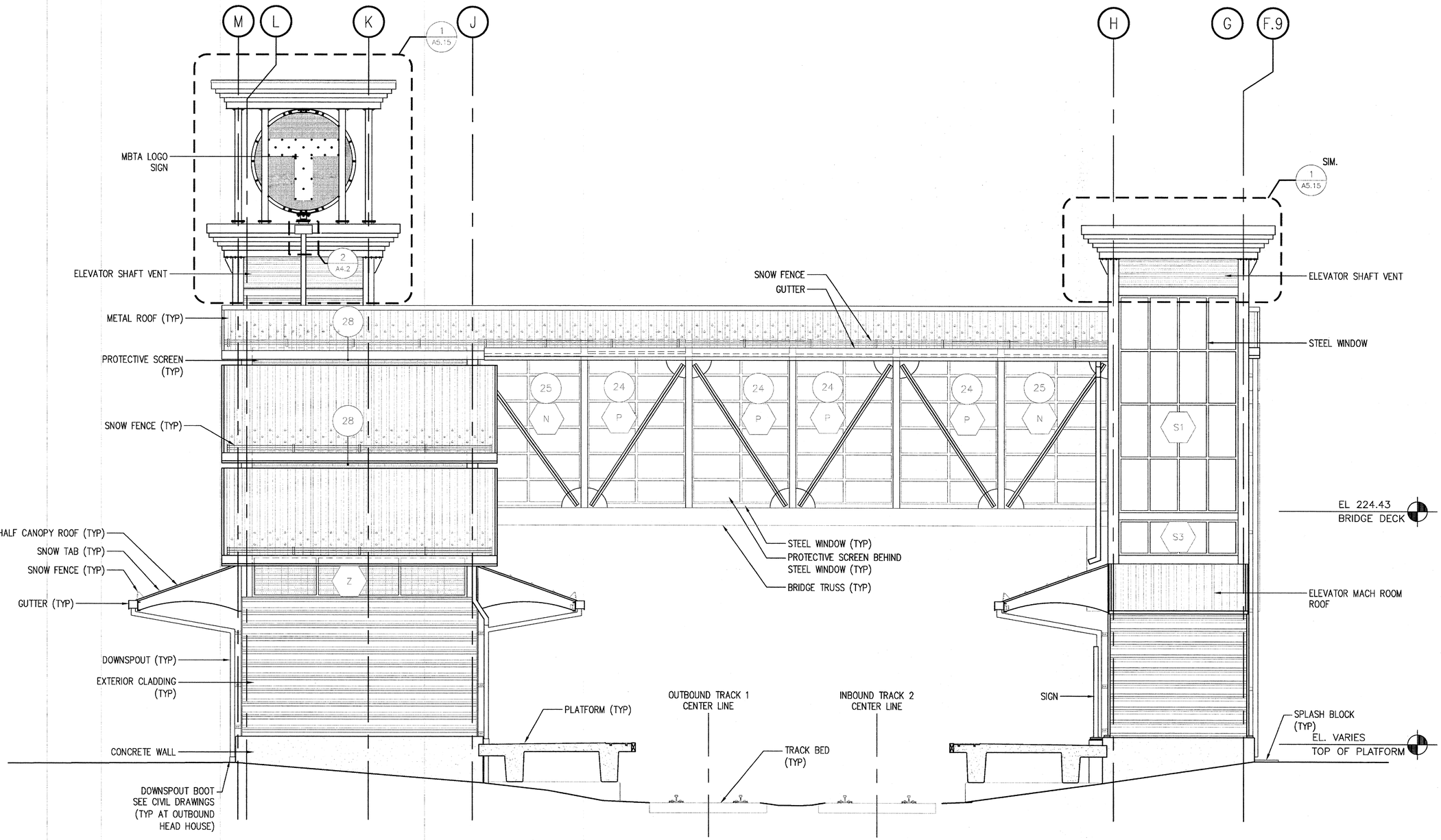

1 ELEVATION
1/4" = 1'-0"

0 2 4 8
SCALE: 1/4" = 1'-0"

REGISTERED ARCHITECT
MICHEL A. BASKIN
No. 4453
BOSTON, MA
COMMONWEALTH OF MASSACHUSETTS

MASSACHUSETTS BAY TRANSPORTATION AUTHORITY

FITCHBURG COMMUTER RAIL LINE
IMPROVEMENT PROJECT
CONTRACT NO. G67PS01

SOUTH ACTON STATION
WEST ELEVATION

ISSUE	DATE	DESCRIPTION	BY	CHKD.	APP.

Lozano, Baskin, and Associates, Inc.
Architecture•Urban Design•City Planning
205 Mt. Auburn St. Watertown, MA 02472

HNTB
300 APOLLO DRIVE
CHELMSFORD, MA 01824
(978) 905-4000

PROJECT MANAGER — Date 5/30/12

MASSACHUSETTS BAY TRANSPORTATION AUTHORITY
APPROVED BY: PROJECT MANAGER — Date 6/30/12

HORIZ: N/A	DES. BY	DR. BY	CHK. BY
VERT: N/A	MB DW	DW	MB
DATE: 05/17/12			

PLAN NO. 168589
SHEET A-3.6
ISSUE

FILE NAME: C:\Documents and Settings\Mackintosh LBA\local settings\temp\AcPublish_544\ 02 A-EL0001.dwg
PLOT DATE: May 17, 2012 – 12:03pm

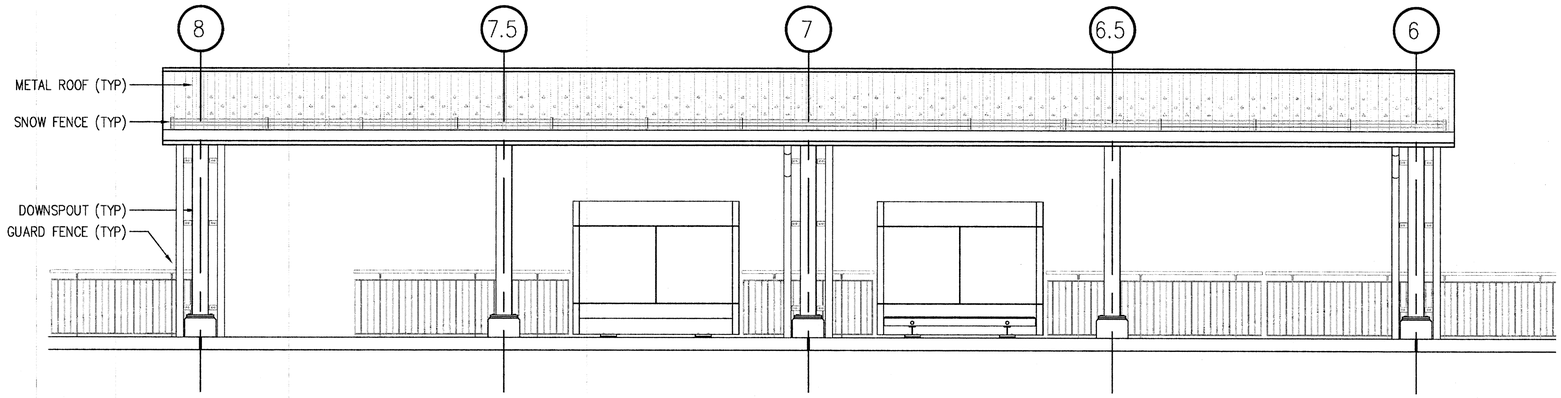

1 ELEVATION
1/4" = 1'-0"

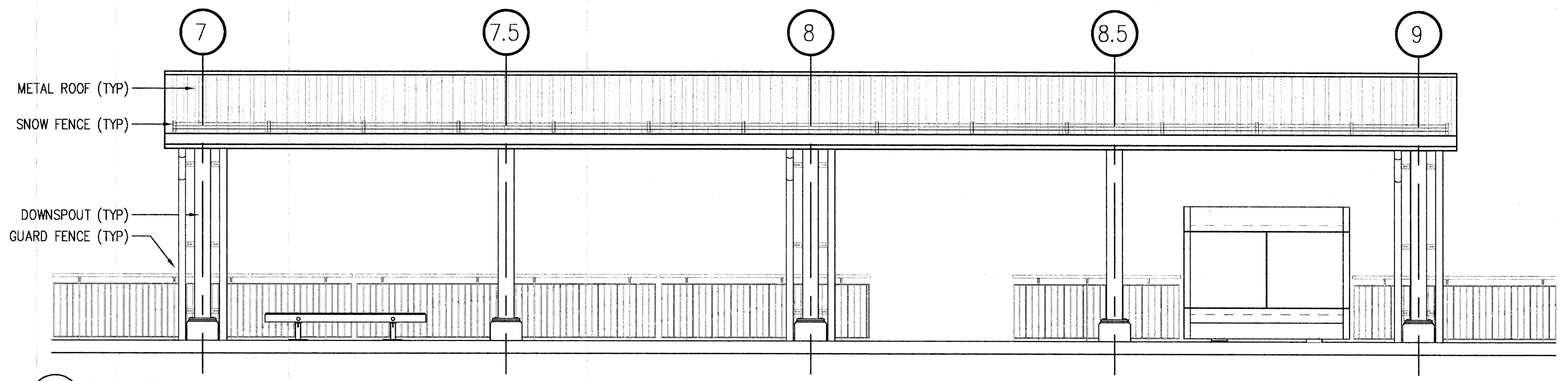

2 ELEVATION
1/4" = 1'-0"

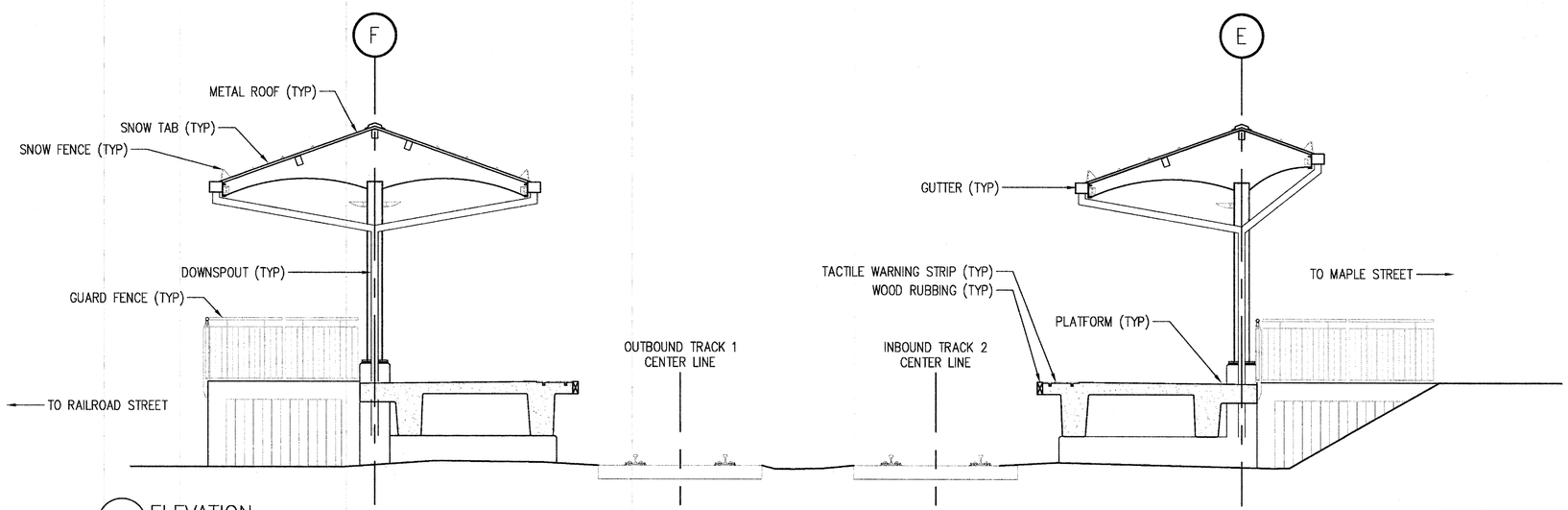

3 ELEVATION
1/4" = 1'-0"

0 2 4 8
SCALE: 1/4" = 1'-0"

ISSUE	DATE	DESCRIPTION	BY	CHKD.	APP.

Lozano, Baskin, and Associates, Inc.
Architecture•Urban Design•City Planning
205 Mt. Auburn St. Watertown, MA 02472

HNTB
300 APOLLO DRIVE
CHELMSFORD, MA 01824
(978) 905-4000

PROJECT MANAGER — Date 5/30/12

MASSACHUSETTS BAY TRANSPORTATION AUTHORITY
APPROVED BY:
PROJECT MANAGER — Date 6/30/12

REGISTERED ARCHITECT MICHAEL A. BASKIN No.4453 BOSTON MA COMMONWEALTH OF MASSACHUSETTS

MASSACHUSETTS BAY TRANSPORTATION AUTHORITY

FITCHBURG COMMUTER RAIL LINE
IMPROVEMENT PROJECT
CONTRACT NO. G67PS01

SOUTH ACTON STATION
ELEVATION
PLATFORM CANOPIES

HORIZ: N/A	DES. BY	DR. BY	CHK. BY	PLAN NO. 168590
VERT: N/A	MB DW	DW	MB	
DATE: 05/17/12				SHEET A-3.7

ISSUE

FILE NAME: C:\Documents and Settings\Mackintosh LBA\local settings\temp\AcPublish_544\ 02 A-EL0001.dwg
PLOT DATE: May 17, 2012 – 12:03pm

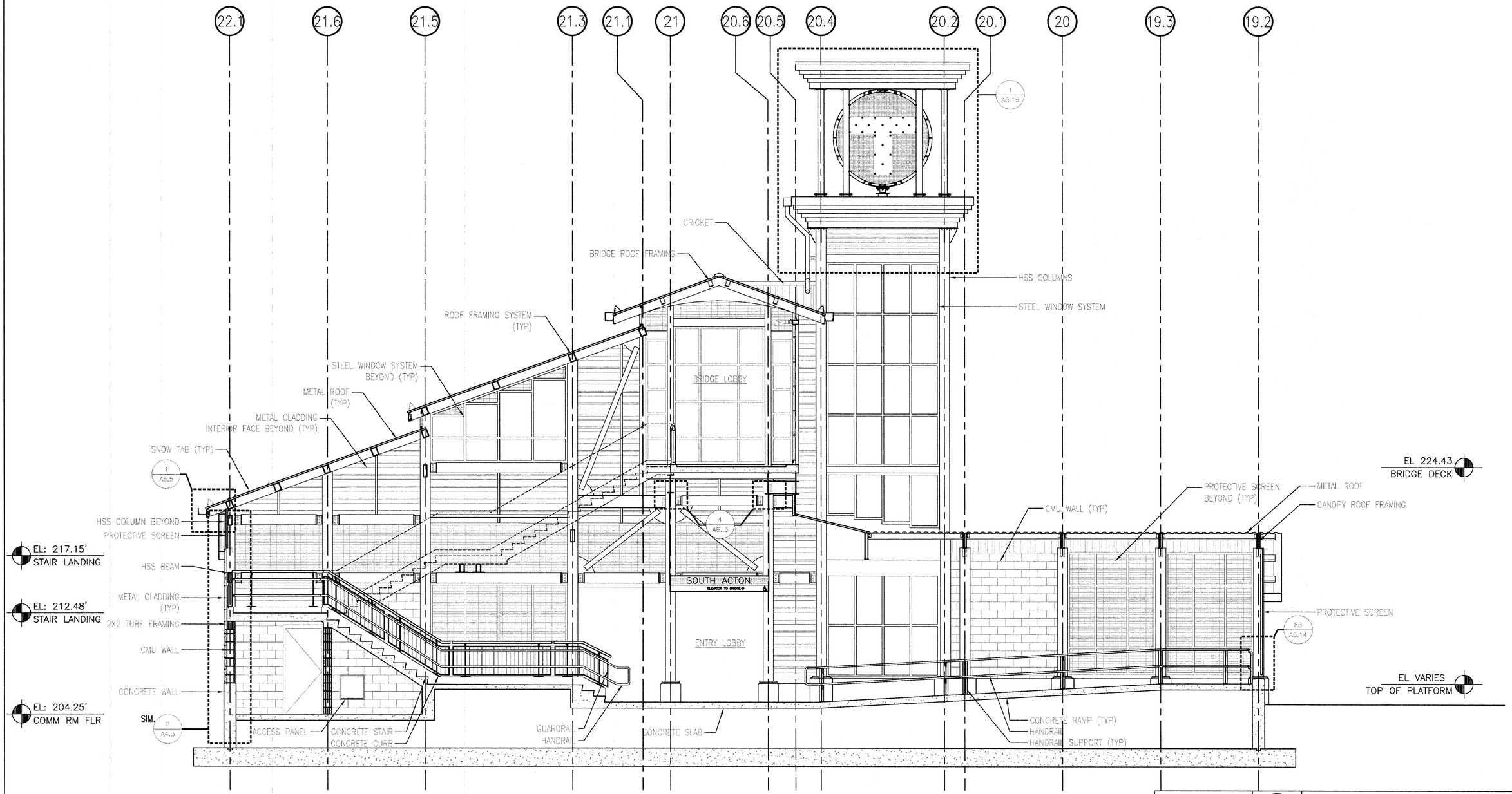

1 SECTION
1/4" = 1'-0"

0 2 4 8
SCALE: 1/4" = 1'-0"

MASSACHUSETTS BAY TRANSPORTATION AUTHORITY

FITCHBURG COMMUTER RAIL LINE
IMPROVEMENT PROJECT
CONTRACT NO. G67PS01

SOUTH ACTON STATION
BUILDING SECTIONS
OUTBOUND HEAD HOUSE

REGISTERED ARCHITECT
MICHEL A. BASKIN
No. 4453
BOSTON MA
COMMONWEALTH OF MASSACHUSETTS

ISSUE	DATE	DESCRIPTION	BY	CHKD.	APP.

HNTB
300 APOLLO DRIVE
CHELMSFORD, MA 01824
(978) 905-4000

PROJECT MANAGER — Date 5/30/12

MASSACHUSETTS BAY TRANSPORTATION AUTHORITY
APPROVED BY
PROJECT MANAGER — Date 6/30/12

Lozano, Baskin, and Associates, Inc.
Architecture•Urban Design•City Planning
205 Mt. Auburn St. Watertown, MA 02472

HORIZ: N/A	DES. BY	DR. BY	CHK. BY	PLAN NO. 168591	ISSUE
VERT: N/A	MB DW	DW	MB		
DATE: 05/17/12				SHEET A-4.1	

FILE NAME: C:\Documents and Settings\Mackintosh LBA\local settings\temp\AcPublish_544\ 03 A-SE0001.dwg
PLOT DATE: May 17, 2012 – 10:28am

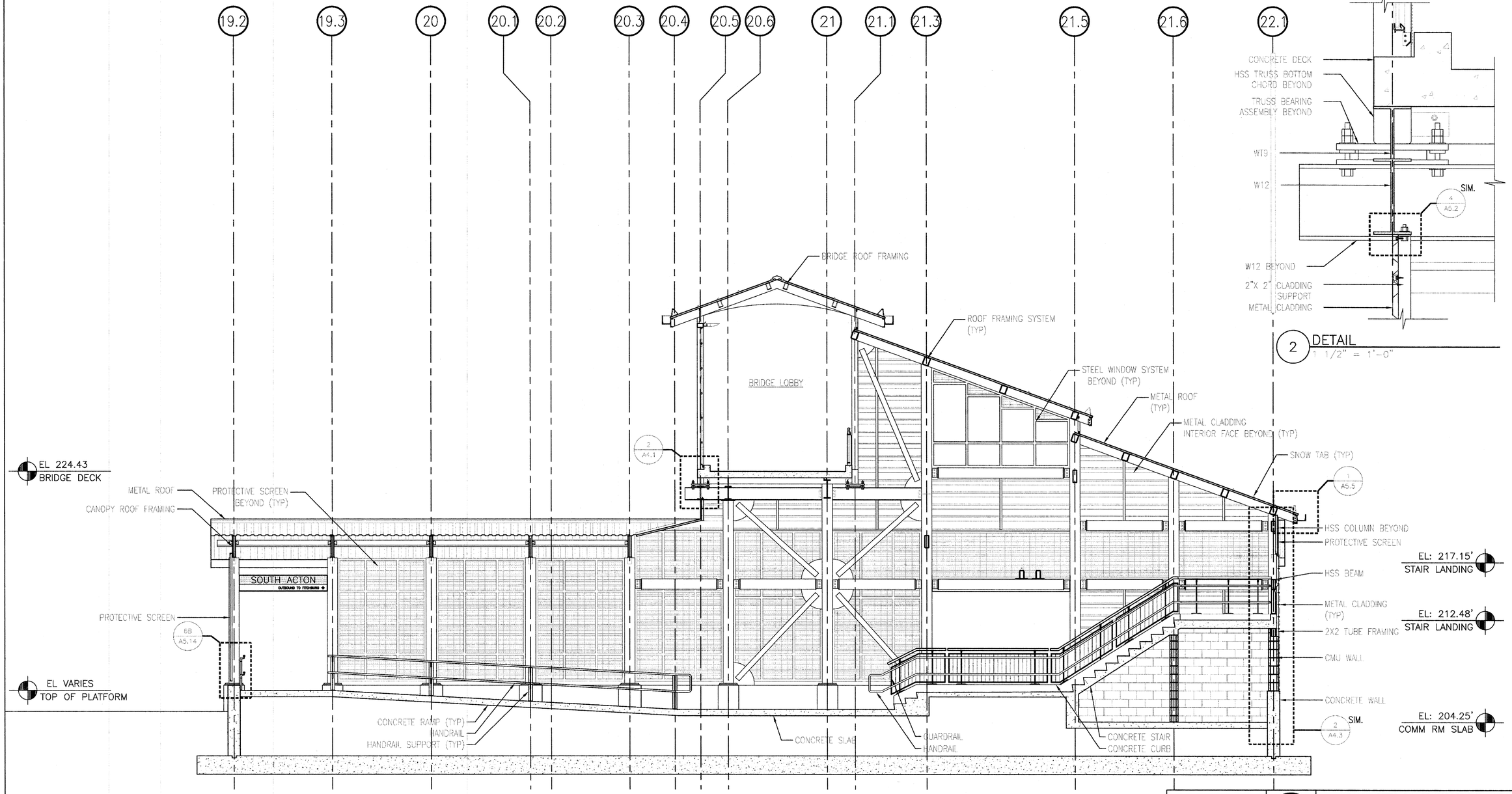

1 SECTION
1/4" = 1'-0"

2 DETAIL
1 1/2" = 1'-0"

0 2 4 8
SCALE: 1/4" = 1'-0"

REGISTERED ARCHITECT
MICHAEL A. BISHOP
No. 4453
BOSTON, MA
COMMONWEALTH OF MASSACHUSETTS

MASSACHUSETTS BAY TRANSPORTATION AUTHORITY

FITCHBURG COMMUTER RAIL LINE
IMPROVEMENT PROJECT
CONTRACT NO. G67PS01

SOUTH ACTON STATION
BUILDING SECTIONS
OUTBOUND HEAD HOUSE

ISSUE	DATE	DESCRIPTION	BY	CHKD.	APP.

HNTB
300 APOLLO DRIVE
CHELMSFORD, MA 01824
(978) 905-4000

PROJECT MANAGER 5/30/12 Date

MASSACHUSETTS BAY TRANSPORTATION AUTHORITY
APPROVED BY:
PROJECT MANAGER 6/30/12 Date

Lozano, Baskin, and Associates, Inc.
Architecture•Urban Design•City Planning
205 Mt. Auburn St. Watertown, MA 02472

HORIZ: N/A	DES. BY MB	DR. BY DW	CHK. BY MB	PLAN NO. 168592
VERT: N/A				SHEET A-4.1A
DATE: 05/17/12				ISSUE

FILE NAME: C:\Documents and Settings\Mackintosh LBA\local settings\temp\AcPublish_544\ 03 A-SE0001.dwg
PLOT DATE: May 17, 2012 - 10:28am

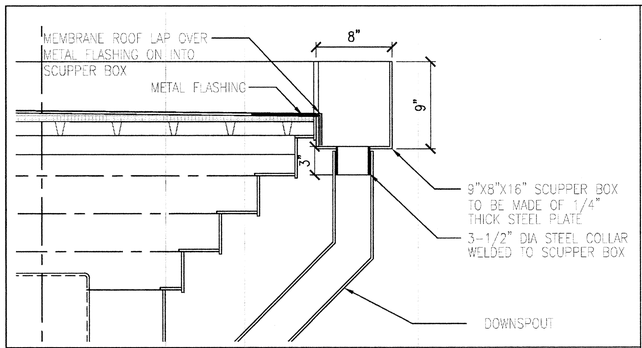

2 DETAIL: SCUPPER
1 1/2" = 1'-0"

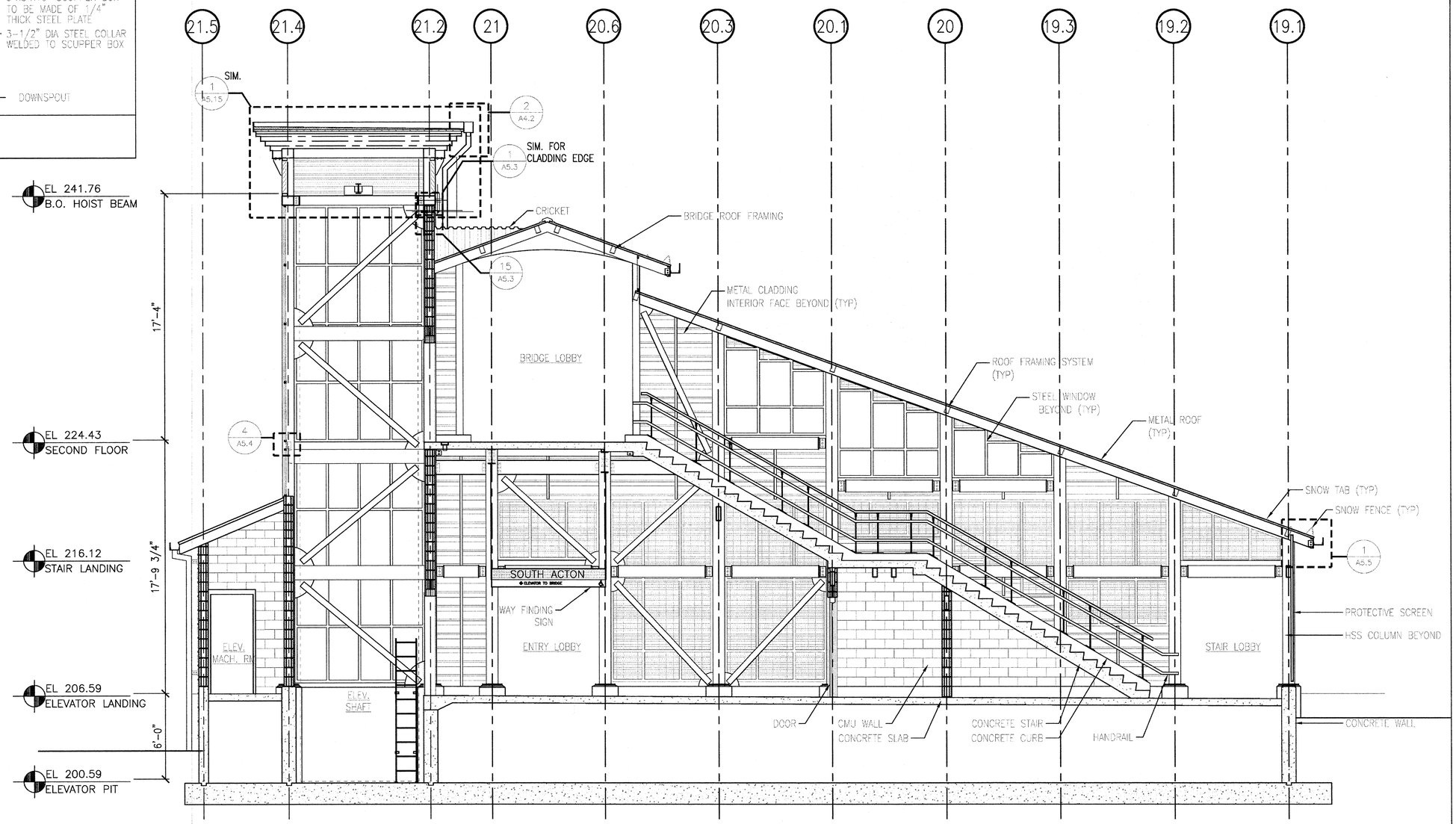

1 SECTION
1/4" = 1'-0"

0 2 4 8
SCALE: 1/4" = 1'-0"

REGISTERED ARCHITECT MICHAEL A. BROWN No.4453 BOSTON MA COMMONWEALTH OF MASSACHUSETTS

MASSACHUSETTS BAY TRANSPORTATION AUTHORITY

FITCHBURG COMMUTER RAIL LINE
IMPROVEMENT PROJECT
CONTRACT NO. G67PS01

SOUTH ACTON STATION
BUILDING SECTIONS
INBOUND HEAD HOUSE

ISSUE	DATE	DESCRIPTION	BY	CHKD.	APP.

HNTB
300 APOLLO DRIVE
CHELMSFORD, MA 01824
(978) 905-4000

PROJECT MANAGER 5/30/12 Date

MASSACHUSETTS BAY TRANSPORTATION AUTHORITY
APPROVED BY:
PROJECT MANAGER 6/30/12 Date

Lozano, Baskin, and Associates, Inc.
Architecture•Urban Design•City Planning
205 Mt. Auburn St. Watertown, MA 02472

	DES. BY	DR. BY	CHK. BY
HORIZ: N/A	MB	DW	MB
VERT: N/A	DW		
DATE: 05/17/12			

PLAN NO. 168593
SHEET A-4.2
ISSUE

FILE NAME: C:\Documents and Settings\Mackintosh LBA\local settings\temp\AcPublish_544\ 03 A-SE0001.dwg
PLOT DATE: May 17, 2012 – 10:28am

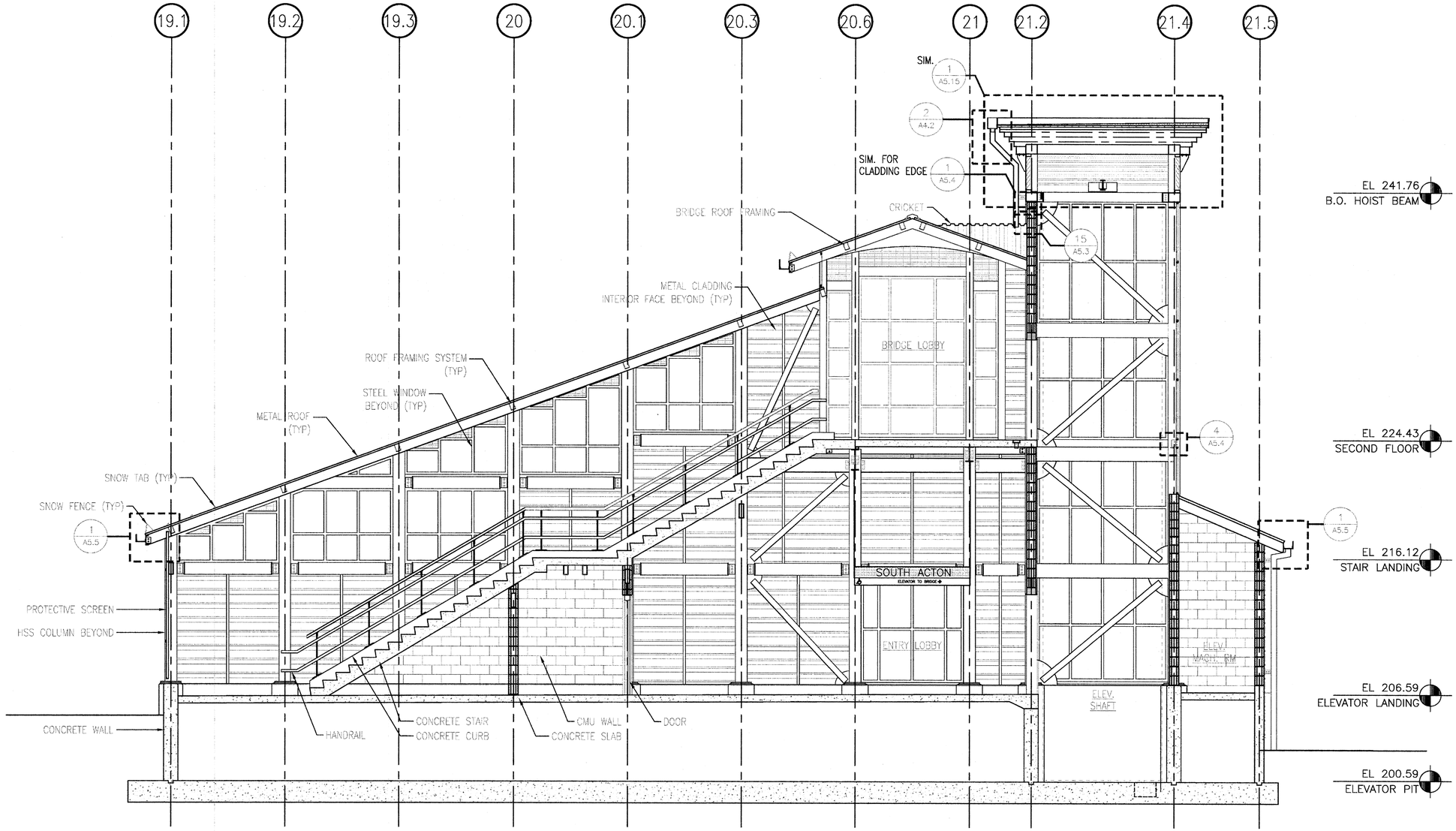

1 SECTION
1/4" = 1'-0"

0 2 4 8
SCALE: 1/4" = 1'-0"

FILE NAME: C:\Documents and Settings\Mackintosh LBA\local settings\temp\AcPublish_544\ 03 A-SE0001.dwg
PLOT DATE: May 17, 2012 – 10:28am

REGISTERED ARCHITECT MICHAEL A. BASKIN No.4453 BOSTON MA COMMONWEALTH OF MASSACHUSETTS

MASSACHUSETTS BAY TRANSPORTATION AUTHORITY

FITCHBURG COMMUTER RAIL LINE
IMPROVEMENT PROJECT
CONTRACT NO. G67PS01

SOUTH ACTON STATION
BUILDING SECTIONS
INBOUND HEAD HOUSE

ISSUE	DATE	DESCRIPTION	BY	CHKD.	APP.

HNTB
300 APOLLO DRIVE
CHELMSFORD, MA 01824
(978) 905-4000

PROJECT MANAGER 5/30/12 Date

MASSACHUSETTS BAY TRANSPORTATION AUTHORITY
APPROVED BY
PROJECT MANAGER 6/30/12 Date

Lozano, Baskin, and Associates, Inc.
Architecture•Urban Design•City Planning
205 Mt. Auburn St. Watertown, MA 02472

HORIZ: N/A	DES. BY	DR. BY	CHK. BY	PLAN NO. 168594	ISSUE
VERT: N/A	MB DW	DW	MB		
DATE: 05/17/12				SHEET A-4.2A	

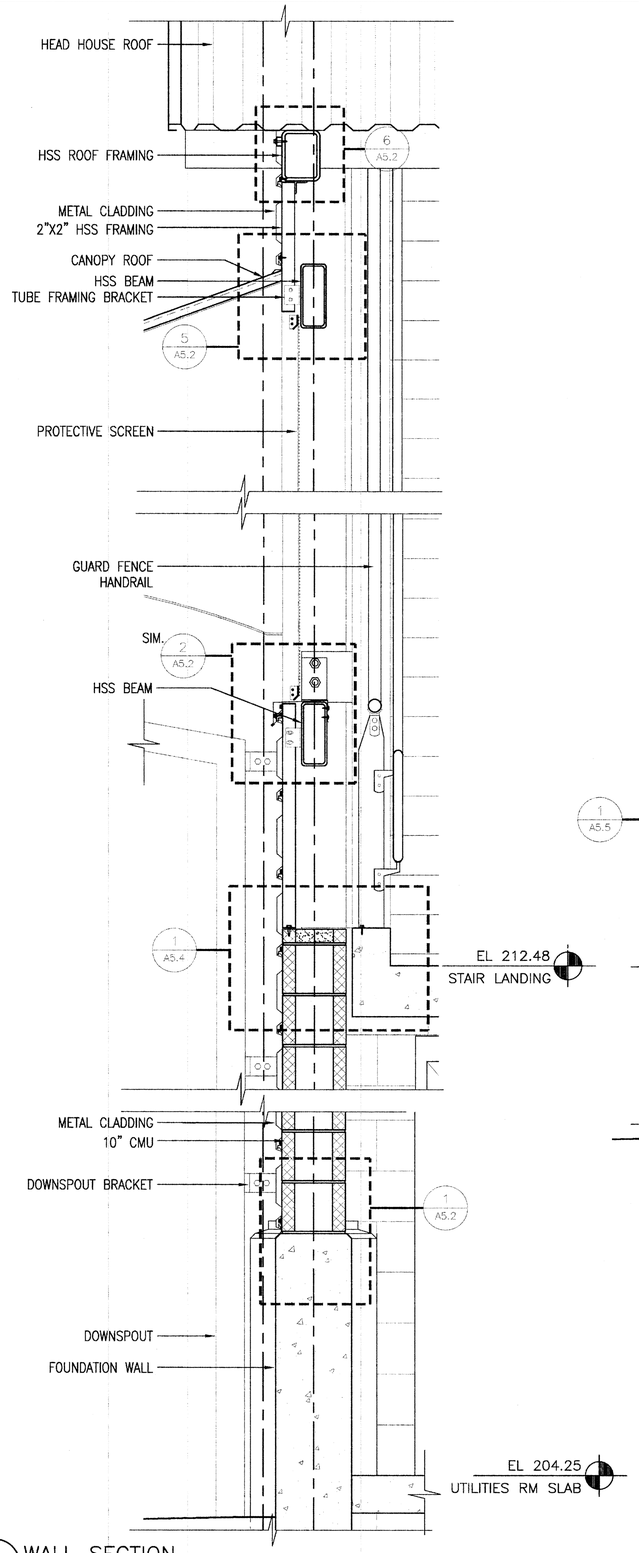

2 WALL SECTION
1" = 1'-0"

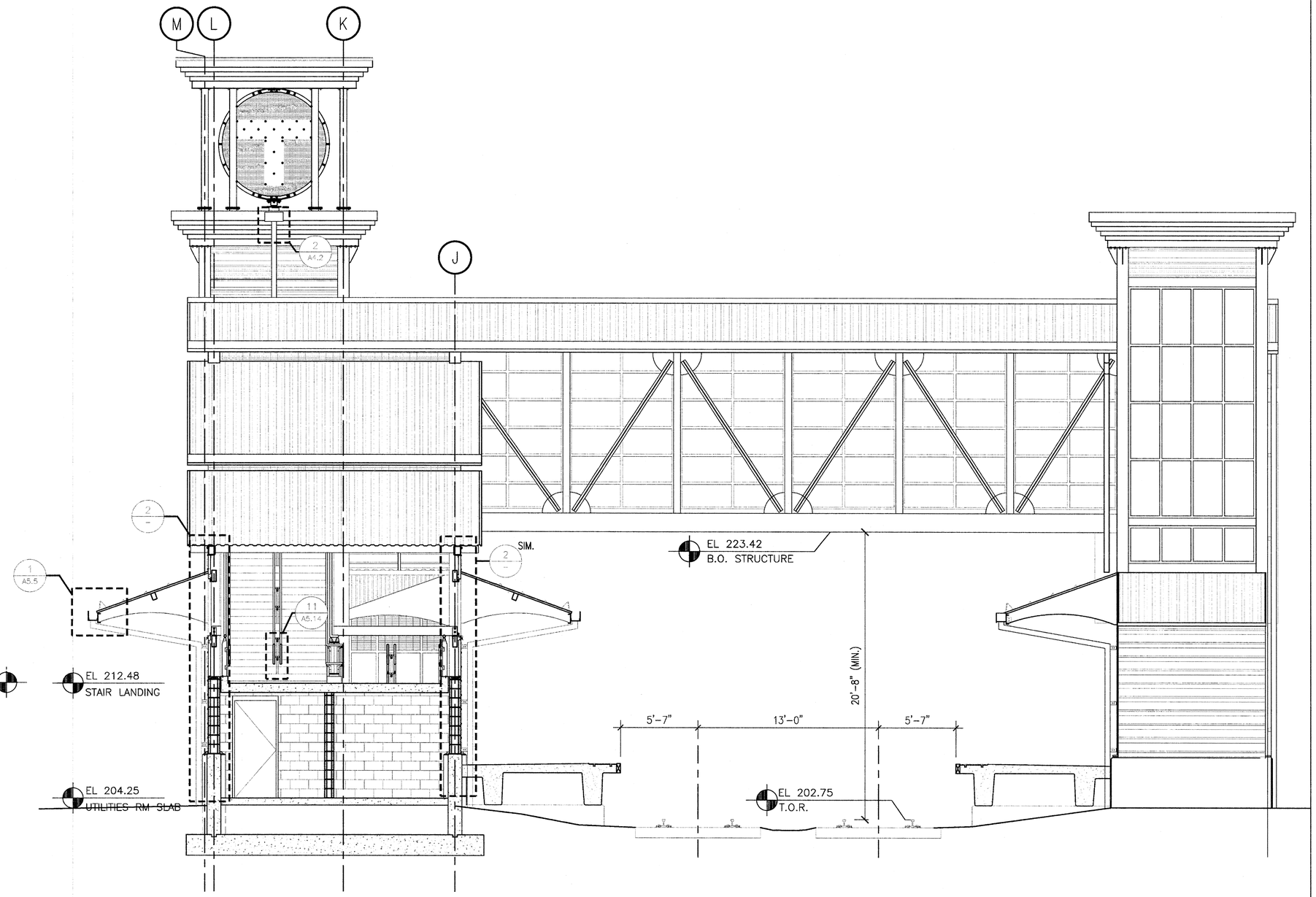

1 SECTION
1/4" = 1'-0"

0 2' 4' 8'
SCALE: 1/4" = 1'-0"

0 4" 8" 1'-4"
SCALE: 1 1/2" = 1'-0"

REGISTERED ARCHITECT MICHAEL A. BASKIN No.4457 BOSTON MA COMMONWEALTH OF MASSACHUSETTS

MASSACHUSETTS BAY TRANSPORTATION AUTHORITY

FITCHBURG COMMUTER RAIL LINE
IMPROVEMENT PROJECT
CONTRACT NO. G67PS01

SOUTH ACTON STATION
BUILDING SECTIONS
HEAD HOUSES

ISSUE	DATE	DESCRIPTION	BY	CHKD.	APP.

HNTB
300 APOLLO DRIVE
CHELMSFORD, MA 01824
(978) 905-4000

PROJECT MANAGER 5/30/12 Date

MASSACHUSETTS BAY TRANSPORTATION AUTHORITY
APPROVED BY:
PROJECT MANAGER 6/30/12 Date

Lozano, Baskin, and Associates, Inc.
Architecture•Urban Design•City Planning
205 Mt. Auburn St. Watertown, MA 02472

HORIZ: N/A	DES. BY	DR. BY	CHK. BY	PLAN NO. 168595	ISSUE
VERT: N/A	MB	DW	MB		
DATE: 05/17/12	DW			SHEET A-4.3	

FILE NAME: C:\Documents and Settings\Mackintosh LBA\Local settings\Temp\AcPublish_544\ 03 A-SE0001.dwg
PLOT DATE: May 17, 2012 – 10:28am

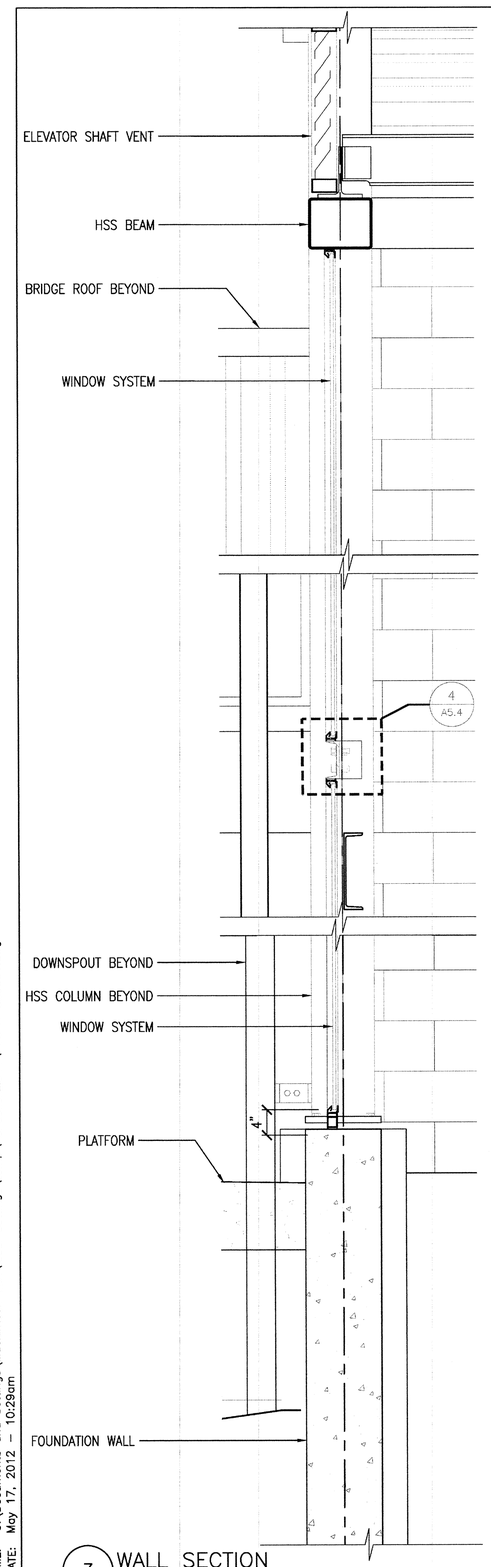

3 WALL SECTION
1" = 1'-0"

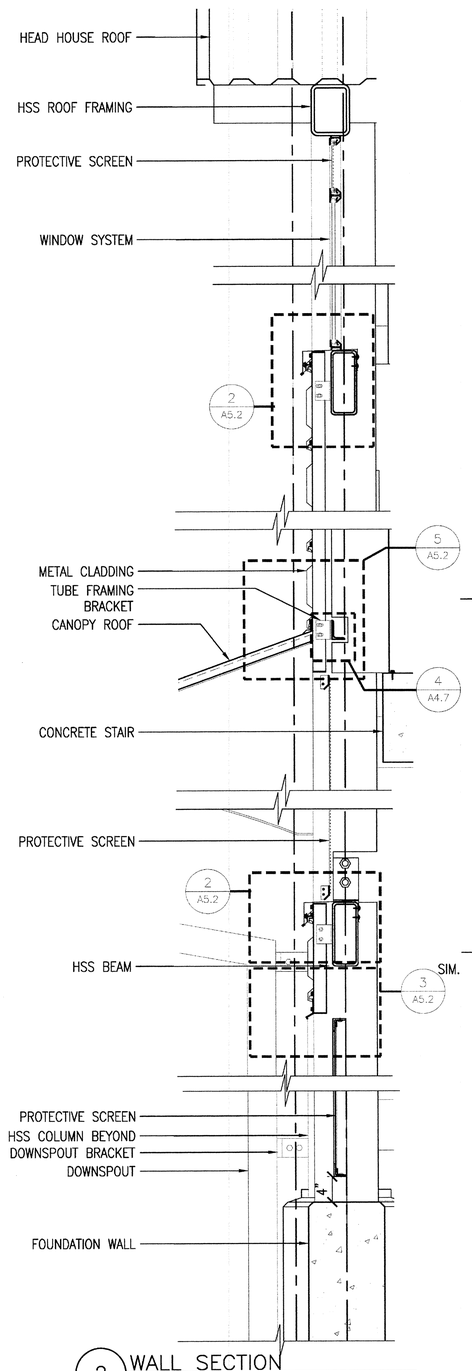

2 WALL SECTION
1" = 1'-0"

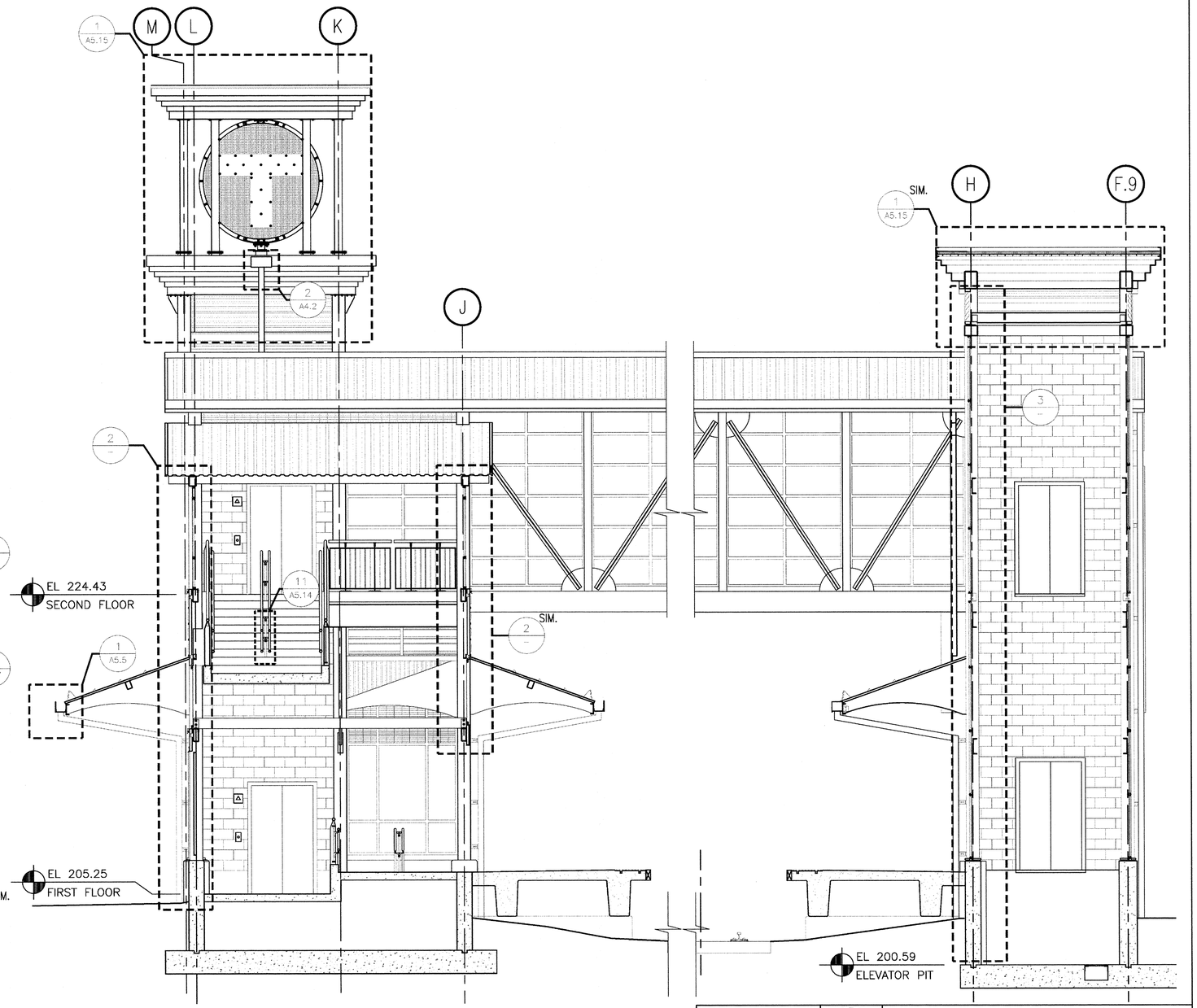

1 SECTION
1/4" = 1'-0"

0 2' 4' 8'
SCALE: 1/4" = 1'-0"

0 4" 8" 1'-4"
SCALE: 1 1/2" = 1'-0"

REGISTERED ARCHITECT MICHAEL A. BROWN No.4453 BOSTON MA COMMONWEALTH OF MASSACHUSETTS

MASSACHUSETTS BAY TRANSPORTATION AUTHORITY

FITCHBURG COMMUTER RAIL LINE
IMPROVEMENT PROJECT
CONTRACT NO. G67PS01

SOUTH ACTON STATION
BUILDING SECTIONS
HEAD HOUSES

ISSUE	DATE	DESCRIPTION	BY	CHKD.	APP.

HNTB
300 APOLLO DRIVE
CHELMSFORD, MA 01824
(978) 905-4000

PROJECT MANAGER 5/30/12 Date

MASSACHUSETTS BAY TRANSPORTATION AUTHORITY
APPROVED BY:
PROJECT MANAGER 6/30/12 Date

Lozano, Baskin, and Associates, Inc.
Architecture•Urban Design•City Planning
205 Mt. Auburn St. Watertown, MA 02472

HORIZ: N/A	DES. BY	DR. BY	CHK. BY
VERT: N/A	MB	DW	MB
DATE: 05/17/12	DW		

PLAN NO. 168596
SHEET A-4.4
ISSUE

FILE NAME: C:\Documents and Settings\Mackintosh LBA\local settings\temp\AcPublish_544\ 03 A-SE0001.dwg
PLOT DATE: May 17, 2012 – 10:29am

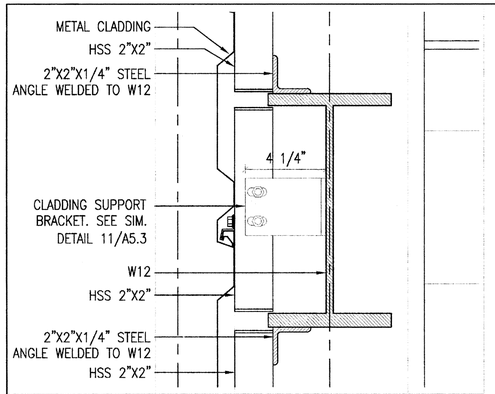

3 DETAIL: SUPPORT ANGLE
3" = 1'-0"

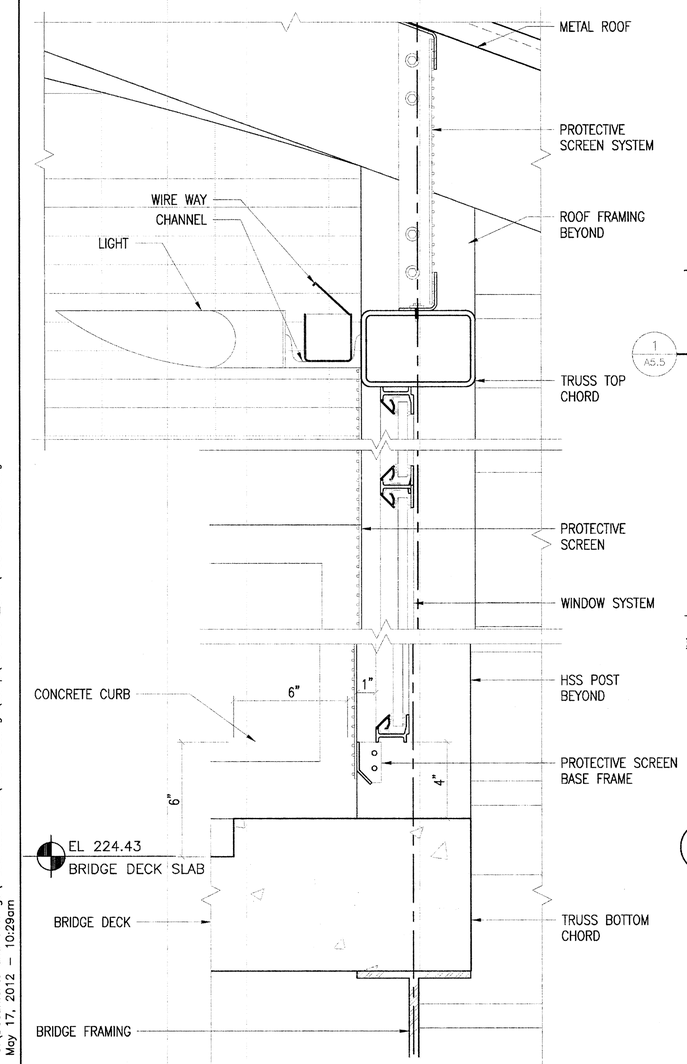

2 TYPICAL WALL SECTION: BRIDGE
3" = 1'-0"

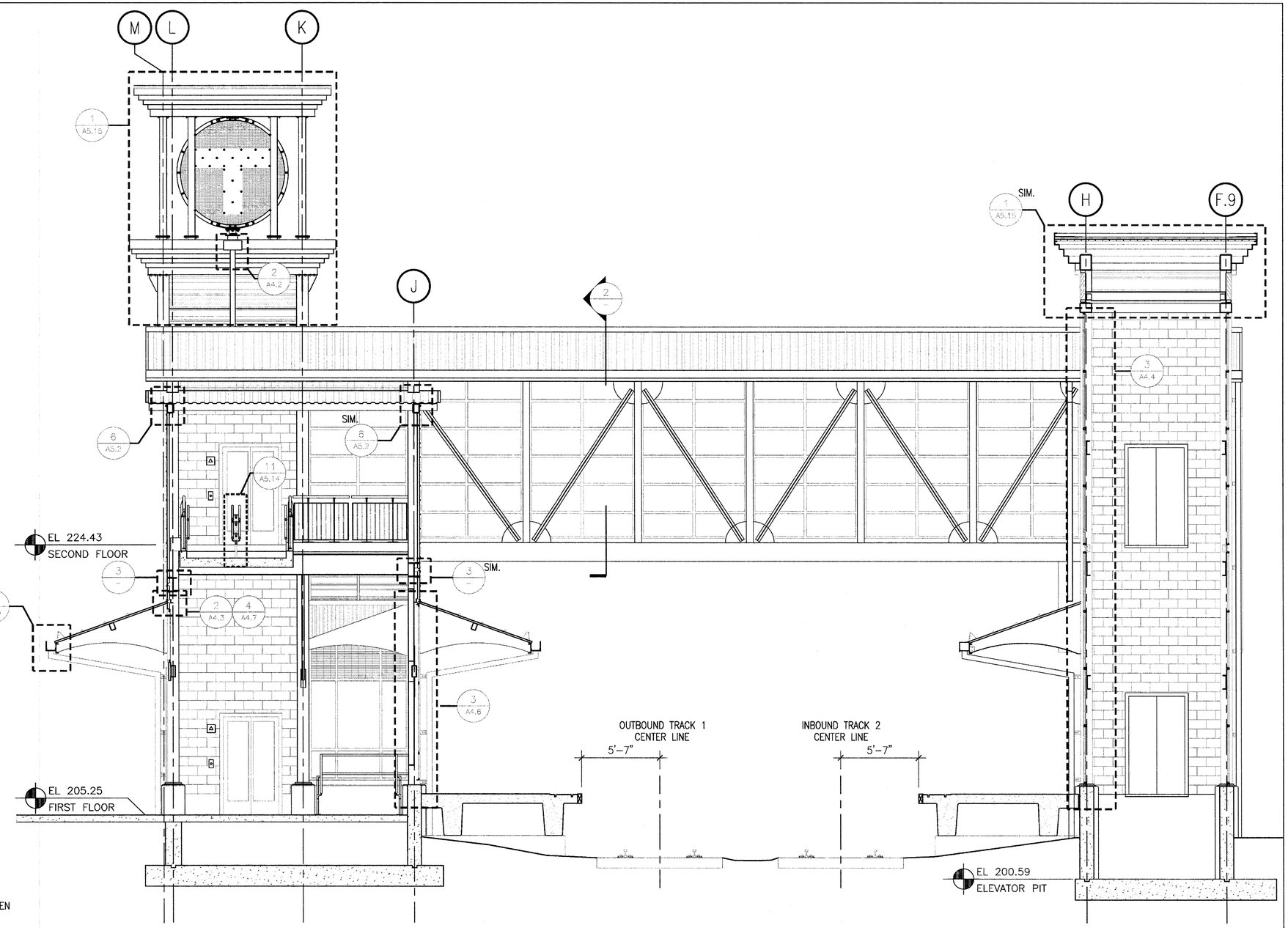

1 SECTION
1/4" = 1'-0"

0 2' 4' 8'
SCALE: 1/4" = 1'-0"

0 2" 4" 8"
SCALE: 3" = 1'-0"

REGISTERED ARCHITECT MICHAEL A. BASKIN No.4457 BOSTON MA COMMONWEALTH OF MASSACHUSETTS

MASSACHUSETTS BAY TRANSPORTATION AUTHORITY

FITCHBURG COMMUTER RAIL LINE
IMPROVEMENT PROJECT
CONTRACT NO. G67PS01

SOUTH ACTON STATION
BUILDING SECTIONS
HEAD HOUSES

ISSUE	DATE	DESCRIPTION	BY	CHKD.	APP.

HNTB
300 APOLLO DRIVE
CHELMSFORD, MA 01824
(978) 905-4000

PROJECT MANAGER 5/30/12 Date

MASSACHUSETTS BAY TRANSPORTATION AUTHORITY
APPROVED BY:
PROJECT MANAGER 6/30/12 Date

Lozano, Baskin, and Associates, Inc.
Architecture•Urban Design•City Planning
205 Mt. Auburn St. Watertown, MA 02472

HORIZ: N/A	DES. BY	DR. BY	CHK. BY
VERT: N/A	MB DW	DW	MB
DATE: 05/17/12			

PLAN NO. 168597
SHEET A-4.5
ISSUE

FILE NAME: C:\Documents and Settings\Mackintosh LBA\local settings\temp\AcPublish_544\ 03 A-SE0001.dwg
PLOT DATE: May 17, 2012 – 10:29am

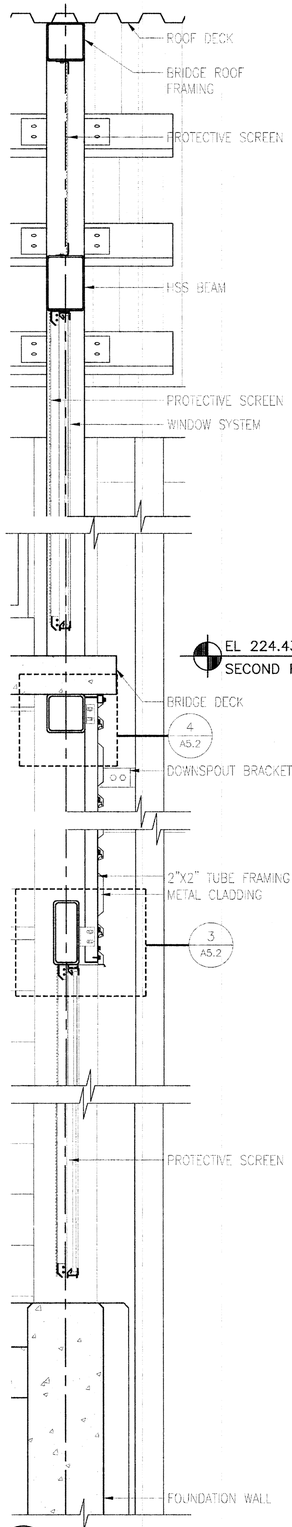

4 WALL SECTION
1" = 1'-0"

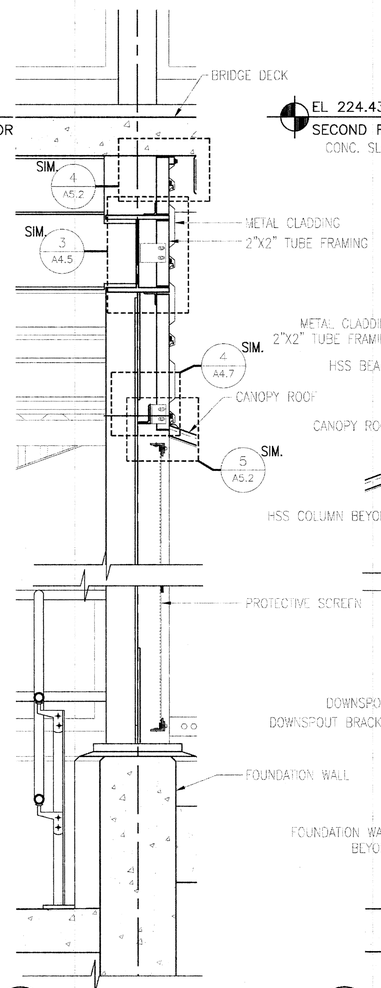

3 WALL SECTION
1" = 1'-0"

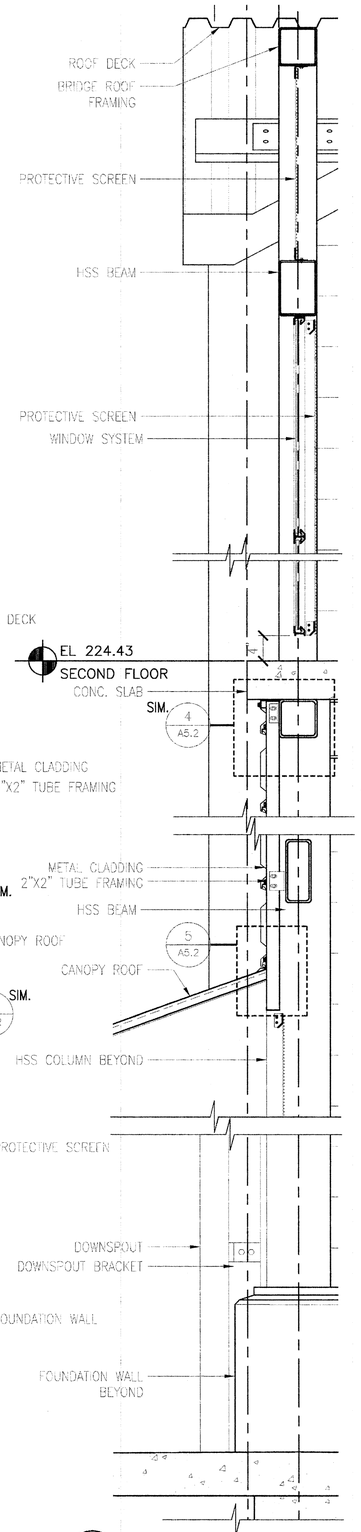

2 WALL SECTION
1" = 1'-0"

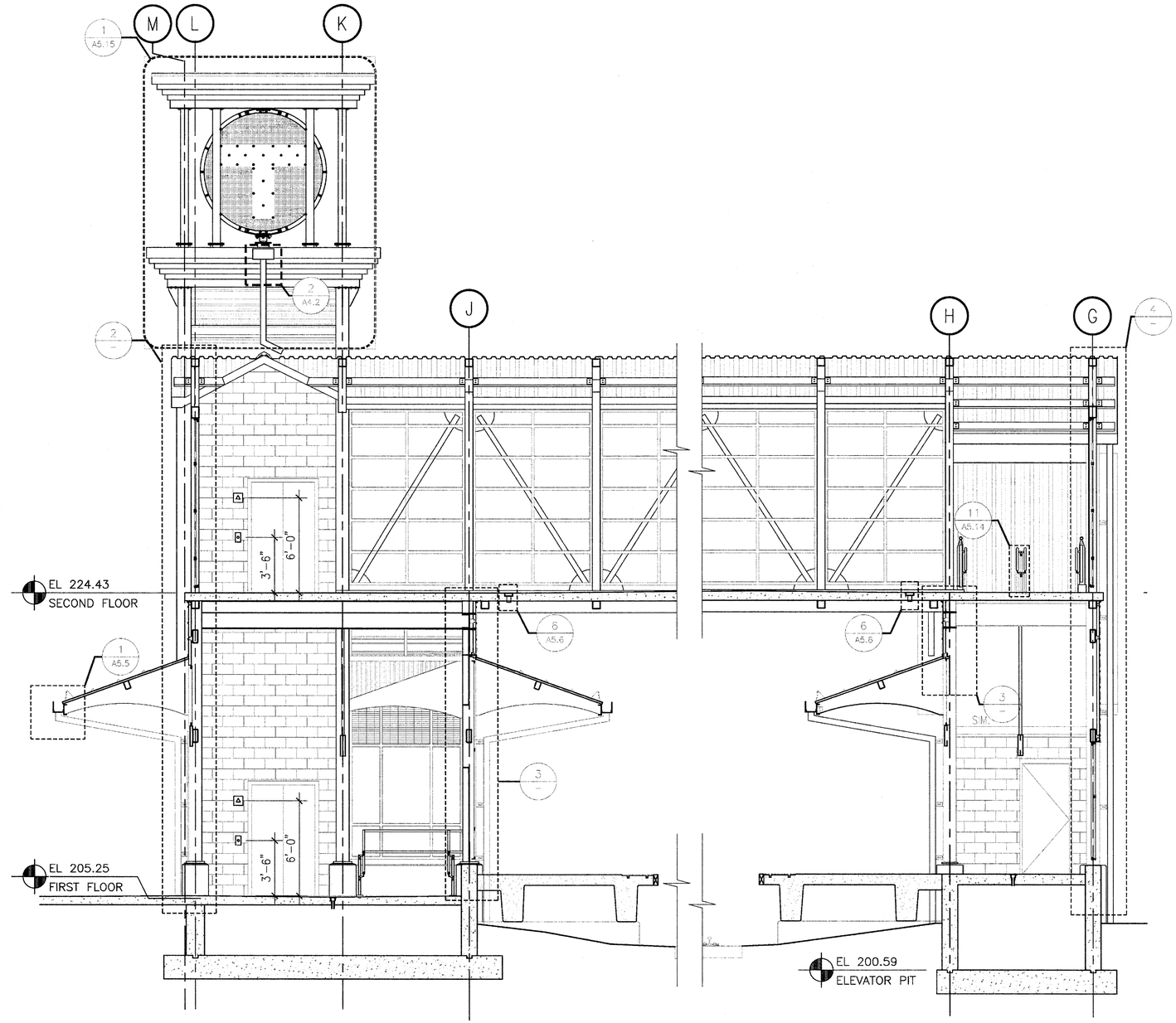

1 SECTION
1/4" = 1'-0"

0 2' 4' 8'
SCALE: 1/4" = 1'-0"

0 4" 8" 1'-4"
SCALE: 1 1/2" = 1'-0"

REGISTERED ARCHITECT MICHAEL A. BASKIN No. 4453 BOSTON MA COMMONWEALTH OF MASSACHUSETTS

MASSACHUSETTS BAY TRANSPORTATION AUTHORITY

FITCHBURG COMMUTER RAIL LINE
IMPROVEMENT PROJECT
CONTRACT NO. G67PS01

SOUTH ACTON STATION
BUILDING SECTIONS
HEAD HOUSES

ISSUE	DATE	DESCRIPTION	BY	CHKD.	APP.

Lozano, Baskin, and Associates, Inc.
Architecture•Urban Design•City Planning
205 Mt. Auburn St. Watertown, MA 02472

HNTB
300 APOLLO DRIVE
CHELMSFORD, MA 01824
(978) 905-4000

PROJECT MANAGER — Date 5/30/12

MASSACHUSETTS BAY TRANSPORTATION AUTHORITY
APPROVED BY: PROJECT MANAGER — Date 6/30/12

HORIZ: N/A	DES. BY	DR. BY	CHK. BY
VERT: N/A	MB	DW	MB
DATE: 05/17/12	DW		

PLAN NO. 168598
SHEET A-4.6
ISSUE

FILE NAME: C:\Documents and Settings\Mackintosh LBA\local settings\temp\AcPublish_544\ 03 A-SE0001.dwg
PLOT DATE: May 17, 2012 – 10:29am

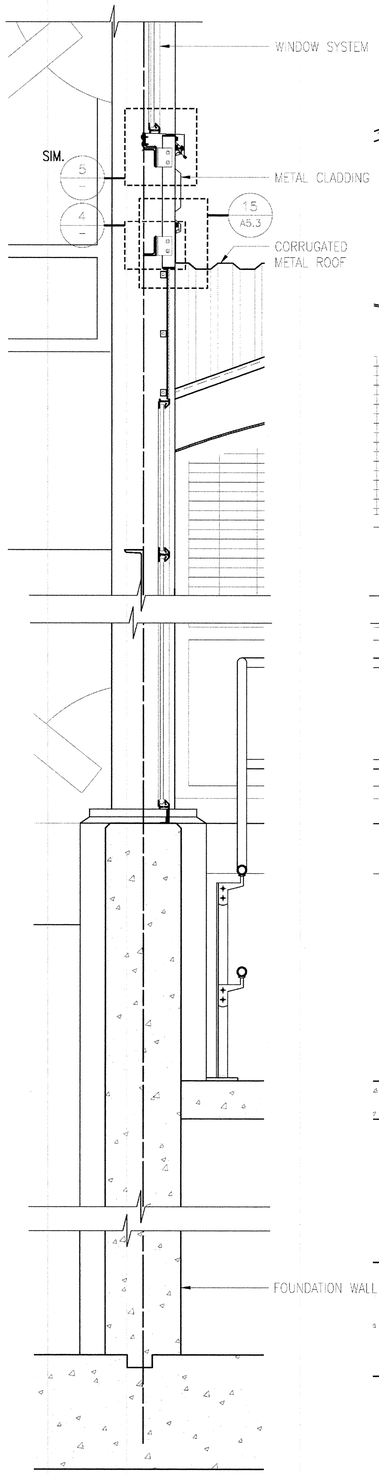

3 WALL SECTION
1" = 1'-0"

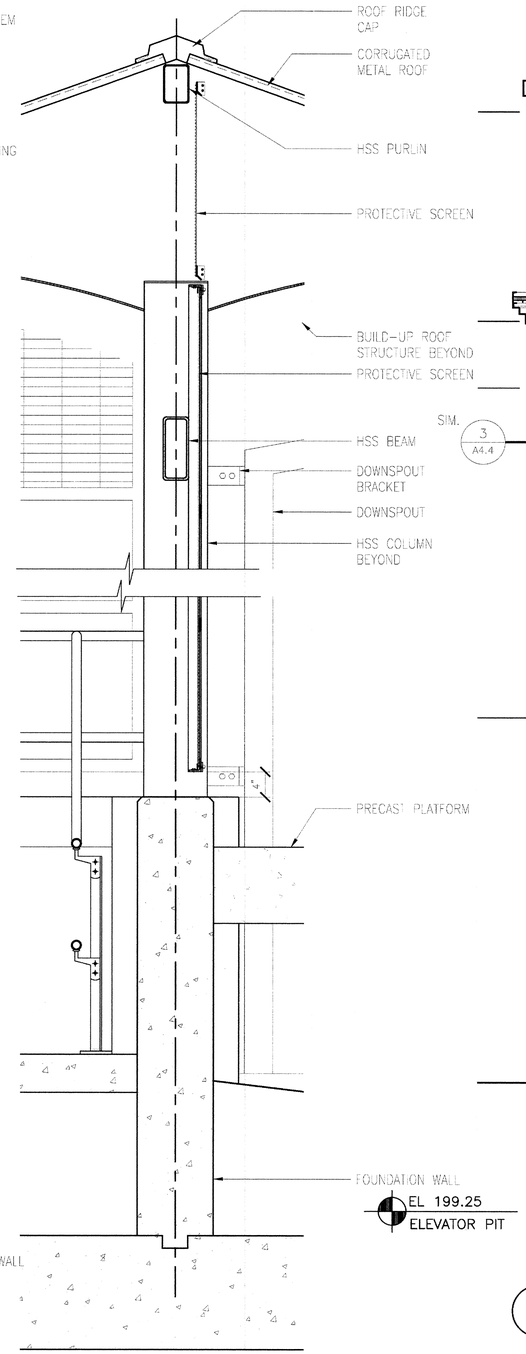

2 WALL SECTION
1" = 1'-0"

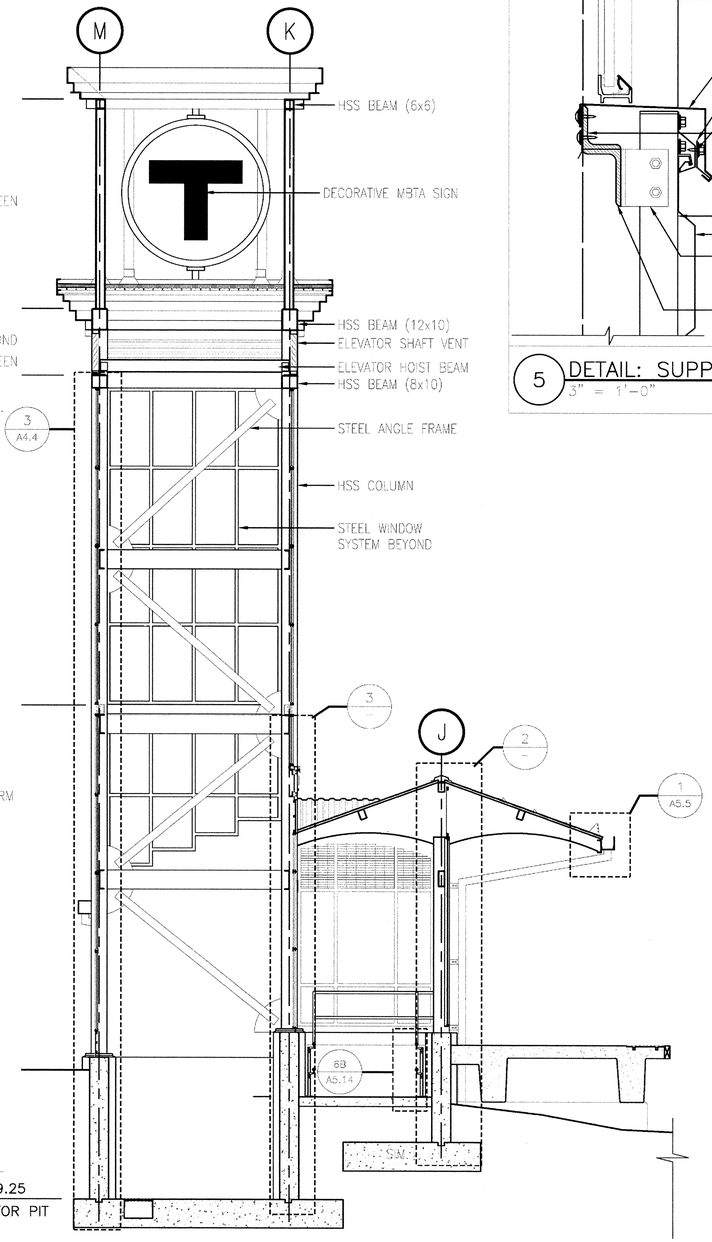

1 SECTION
1/4" = 1'-0"

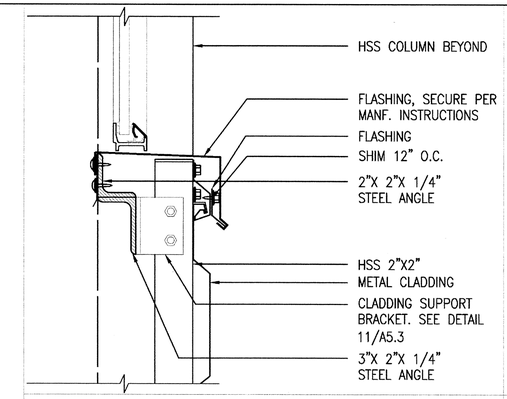

5 DETAIL: SUPPORT ANGLE
3" = 1'-0"

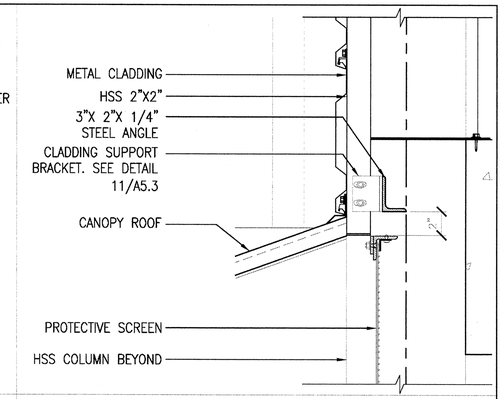

4 DETAIL: SUPPORT ANGLE
3" = 1'-0"

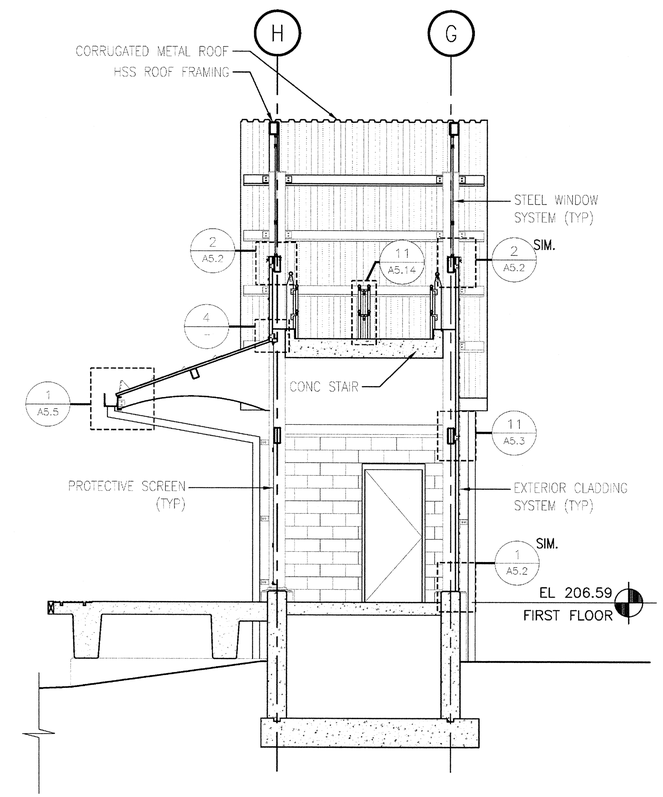

0 2' 4' 8'
SCALE: 1/4" = 1'-0"

0 4" 8" 1'-4"
SCALE: 1 1/2" = 1'-0"

MASSACHUSETTS BAY TRANSPORTATION AUTHORITY

FITCHBURG COMMUTER RAIL LINE
IMPROVEMENT PROJECT
CONTRACT NO. G67PS01

SOUTH ACTON STATION
BUILDING SECTIONS
HEAD HOUSES

REGISTERED ARCHITECT
MICHAEL A. BASKIN
No.4453
BOSTON, MA
COMMONWEALTH OF MASSACHUSETTS

ISSUE	DATE	DESCRIPTION	BY	CHKD.	APP.

HNTB
300 APOLLO DRIVE
CHELMSFORD, MA 01824
(978) 905-4000

PROJECT MANAGER 5/30/12 Date

MASSACHUSETTS BAY TRANSPORTATION AUTHORITY
APPROVED BY:
PROJECT MANAGER 6/30/12 Date

Lozano, Baskin, and Associates, Inc.
Architecture•Urban Design•City Planning
205 Mt. Auburn St. Watertown, MA 02472

HORIZ: N/A	DES. BY MB	DR. BY DW	CHK. BY MB
VERT: N/A	DW		
DATE: 05/17/12			

PLAN NO. 168599
SHEET A-4.7
ISSUE

FILE NAME: C:\Documents and Settings\Mackintosh LBA\local settings\temp\AcPublish_544\ 03 A-SE0001.dwg
PLOT DATE: May 17, 2012 - 10:29am

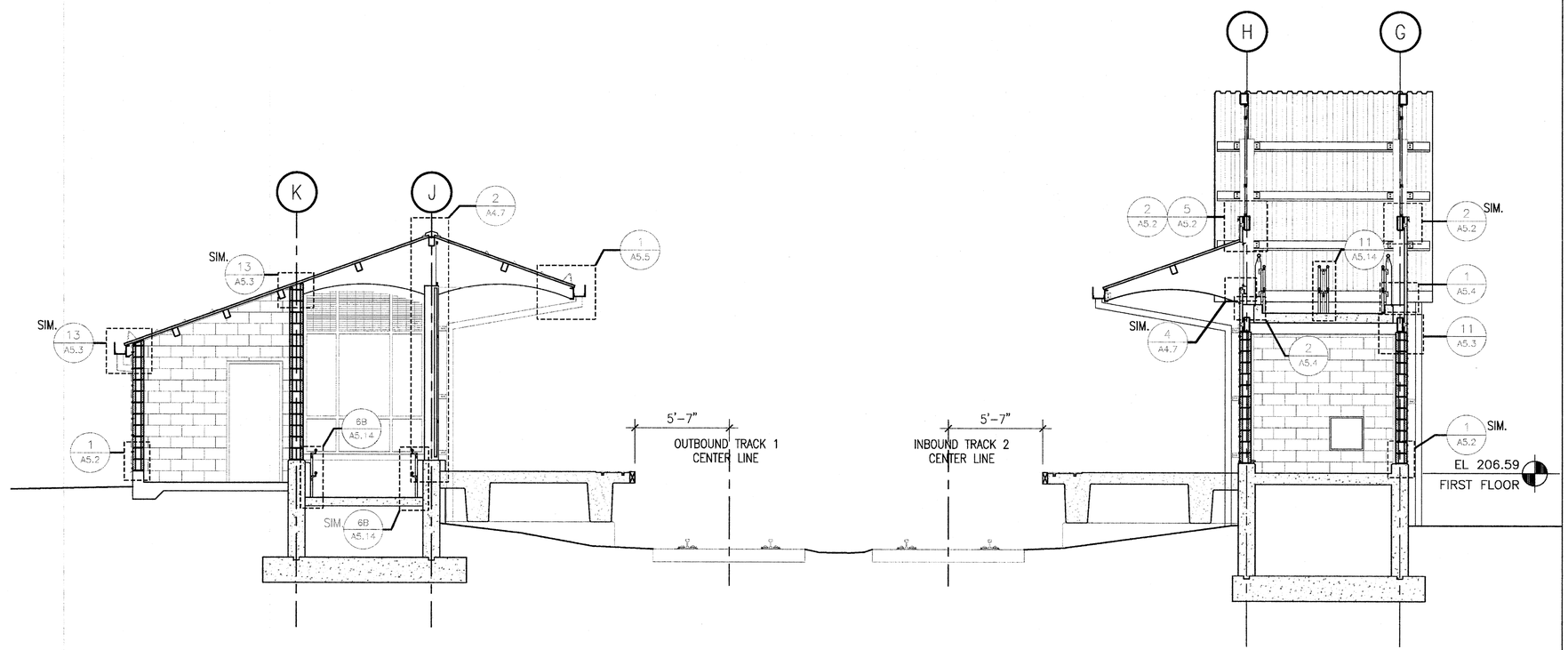

1 SECTION
1/4" = 1'-0"

0 2 4 8
SCALE: 1/4" = 1'-0"

ISSUE	DATE	DESCRIPTION	BY	CHKD.	APP.

Lozano, Baskin, and Associates, Inc.
Architecture•Urban Design•City Planning
205 Mt. Auburn St. Watertown, MA 02472

MASSACHUSETTS BAY TRANSPORTATION AUTHORITY

FITCHBURG COMMUTER RAIL LINE
IMPROVEMENT PROJECT
CONTRACT NO. G67PS01

SOUTH ACTON STATION
BUILDING SECTIONS
HEAD HOUSES

HNTB
300 APOLLO DRIVE
CHELMSFORD, MA 01824
(978) 905-4000

PROJECT MANAGER — Date 5/30/12

MASSACHUSETTS BAY TRANSPORTATION AUTHORITY
APPROVED BY:
PROJECT MANAGER — Date 6/30/12

HORIZ: N/A	DES. BY	DR. BY	CHK. BY	PLAN NO. 168600	ISSUE
VERT: N/A	MB DW	DW	MB		
DATE: 05/17/12				SHEET A-4.8	

FILE NAME: C:\Documents and Settings\Mackintosh LBA\local settings\temp\AcPublish_544\ 03 A-SE0001.dwg
PLOT DATE: May 17, 2012 – 10:29am

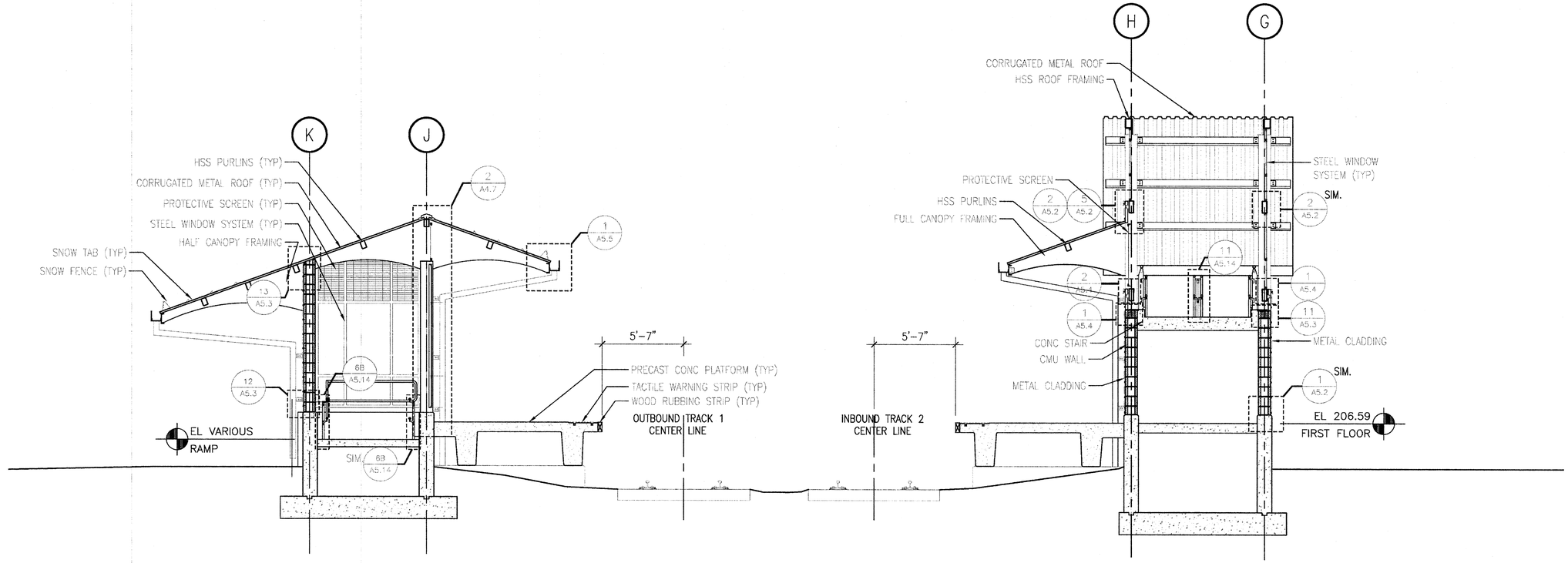

1 SECTION
1/4" = 1'-0"

0 2 4 8
SCALE: 1/4" = 1'-0"

MASSACHUSETTS BAY TRANSPORTATION AUTHORITY

FITCHBURG COMMUTER RAIL LINE
IMPROVEMENT PROJECT
CONTRACT NO. G67PS01

SOUTH ACTON STATION
BUILDING SECTIONS
HEAD HOUSES

REGISTERED ARCHITECT
MICHAEL A. BASKIN
No. 4453
BOSTON, MA
COMMONWEALTH OF MASSACHUSETTS

ISSUE	DATE	DESCRIPTION	BY	CHKD.	APP.

HNTB
300 APOLLO DRIVE
CHELMSFORD, MA 01824
(978) 905-4000

PROJECT MANAGER — Date 5/30/12

MASSACHUSETTS BAY TRANSPORTATION AUTHORITY
APPROVED BY:
PROJECT MANAGER — Date 6/30/12

Lozano, Baskin, and Associates, Inc.
Architecture•Urban Design•City Planning
205 Mt. Auburn St. Watertown, MA 02472

HORIZ: N/A	DES. BY	DR. BY	CHK. BY	PLAN NO. 168601	ISSUE
VERT: N/A	MB	DW	MB		
DATE: 05/17/12	DW			SHEET A-4.9	

FILE NAME: C:\Documents and Settings\Mackintosh LBA\local settings\temp\AcPublish_544\ 03 A-SE0001.dwg
PLOT DATE: May 17, 2012 – 10:29am

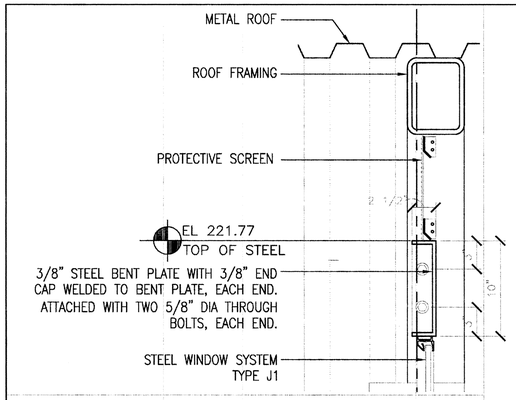

2 DETAIL: SUPPORT CHANNEL
3" = 1'-0"

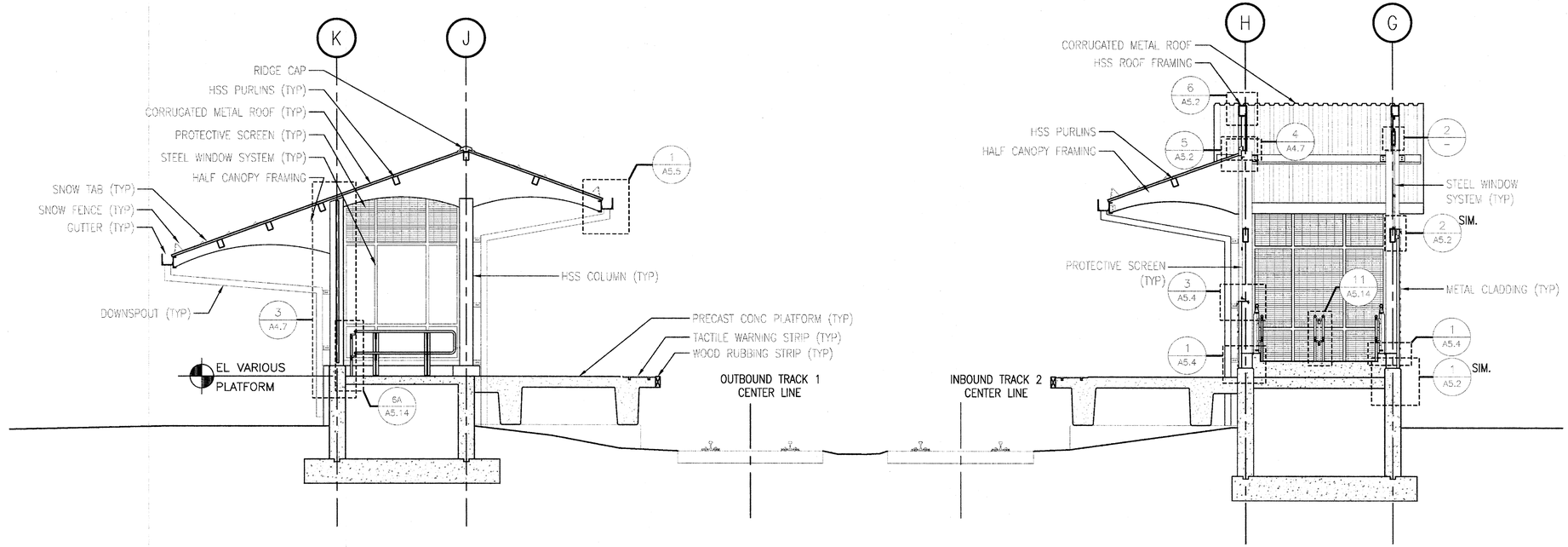

1 SECTION
1/4" = 1'-0"

0 2 4 8
SCALE: 1/4" = 1'-0"

REGISTERED ARCHITECT
MICHEL A. BASKIN
No.4453
BOSTON MA
COMMONWEALTH OF MASSACHUSETTS

MASSACHUSETTS BAY TRANSPORTATION AUTHORITY

FITCHBURG COMMUTER RAIL LINE
IMPROVEMENT PROJECT
CONTRACT NO. G67PS01

SOUTH ACTON STATION
BUILDING SECTIONS
HEAD HOUSES

ISSUE	DATE	DESCRIPTION	BY	CHKD.	APP.

HNTB
300 APOLLO DRIVE
CHELMSFORD, MA 01824
(978) 905-4000

PROJECT MANAGER — Date 5/30/12

MASSACHUSETTS BAY TRANSPORTATION AUTHORITY
APPROVED BY:
PROJECT MANAGER — Date 6/30/12

Lozano, Baskin, and Associates, Inc.
Architecture•Urban Design•City Planning
205 Mt. Auburn St. Watertown, MA 02472

HORIZ: N/A	DES. BY	DR. BY	CHK. BY	PLAN NO. 168602	ISSUE
VERT: N/A	MB	DW	MB		
DATE: 05/17/12	DW			SHEET A-4.10	

FILE NAME: C:\Documents and Settings\Mackintosh LBA\local settings\temp\AcPublish_544\ 03 A-SE0001.dwg
PLOT DATE: May 17, 2012 – 10:29am

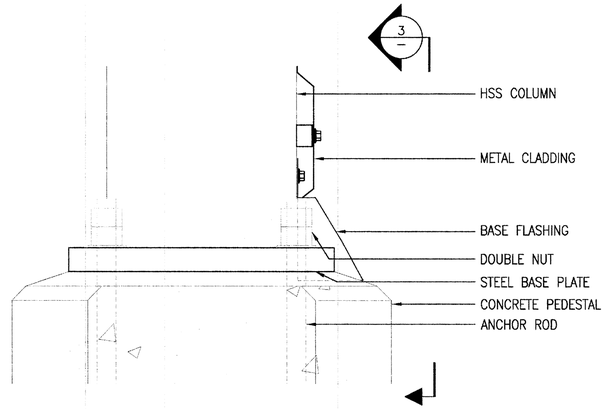

2 DETAIL: METAL CLADDING AT COLUMN BASE
3" = 1'-0"

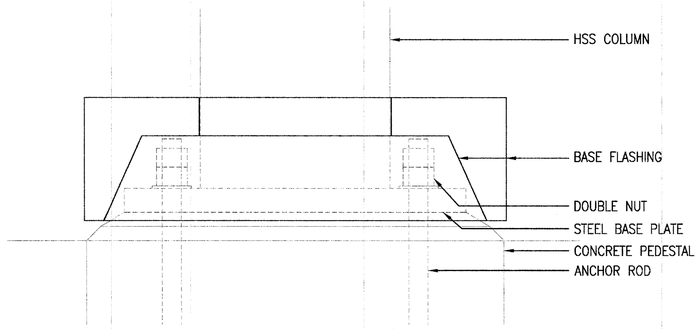

3 DETAIL: METAL CLADDING AT COLUMN BASE
3" = 1'-0"

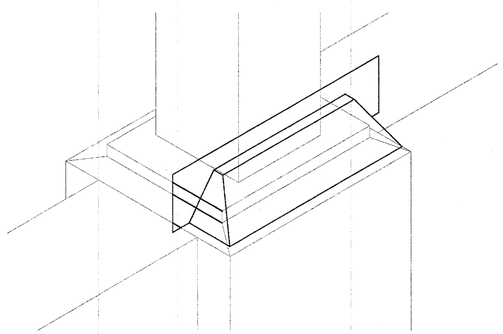

3 ISOMETRIC: METAL CLADDING AT COLUMN BASE
3" = 1'-0"

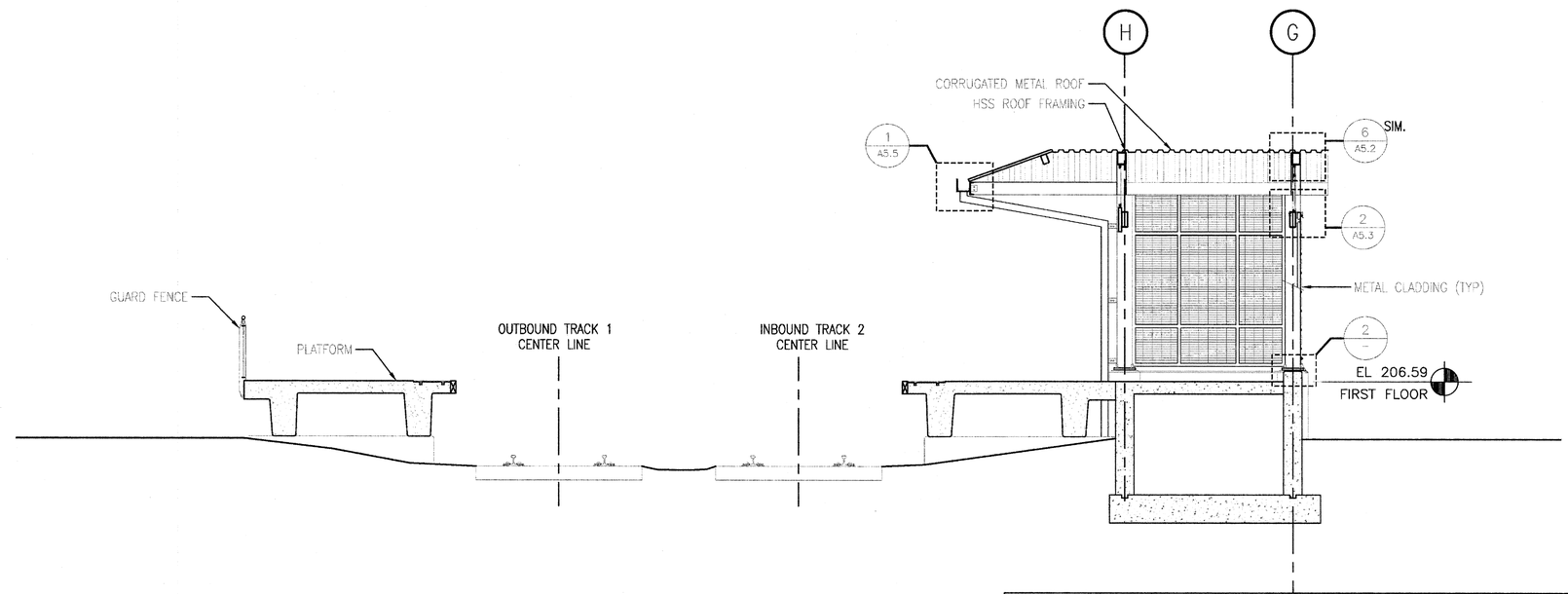

1 SECTION
1/4" = 1'-0"

0 2 4 8
SCALE: 1/4" = 1'-0"

REGISTERED ARCHITECT
MICHAEL A. BASKIN
No. 4453
BOSTON, MA
COMMONWEALTH OF MASSACHUSETTS

MASSACHUSETTS BAY TRANSPORTATION AUTHORITY

FITCHBURG COMMUTER RAIL LINE
IMPROVEMENT PROJECT
CONTRACT NO. G67PS01

SOUTH ACTON STATION
BUILDING SECTIONS
HEAD HOUSES

ISSUE	DATE	DESCRIPTION	BY	CHKD.	APP.

HNTB
300 APOLLO DRIVE
CHELMSFORD, MA 01824
(978) 905-4000

PROJECT MANAGER — Date 5/30/12

MASSACHUSETTS BAY TRANSPORTATION AUTHORITY
APPROVED BY:
PROJECT MANAGER — Date 6/30/12

Lozano, Baskin, and Associates, Inc.
Architecture•Urban Design•City Planning
205 Mt. Auburn St. Watertown, MA 02472

HORIZ: N/A	DES. BY	DR. BY	CHK. BY	PLAN NO. 168603	ISSUE
VERT: N/A	MB DW	DW	MB		
DATE: 05/17/12				SHEET A-4.11	

FILE NAME: C:\Documents and Settings\Mackintosh LBA\local settings\temp\AcPublish_544\ 03 A-SE0001.dwg
PLOT DATE: May 17, 2012 – 10:30am

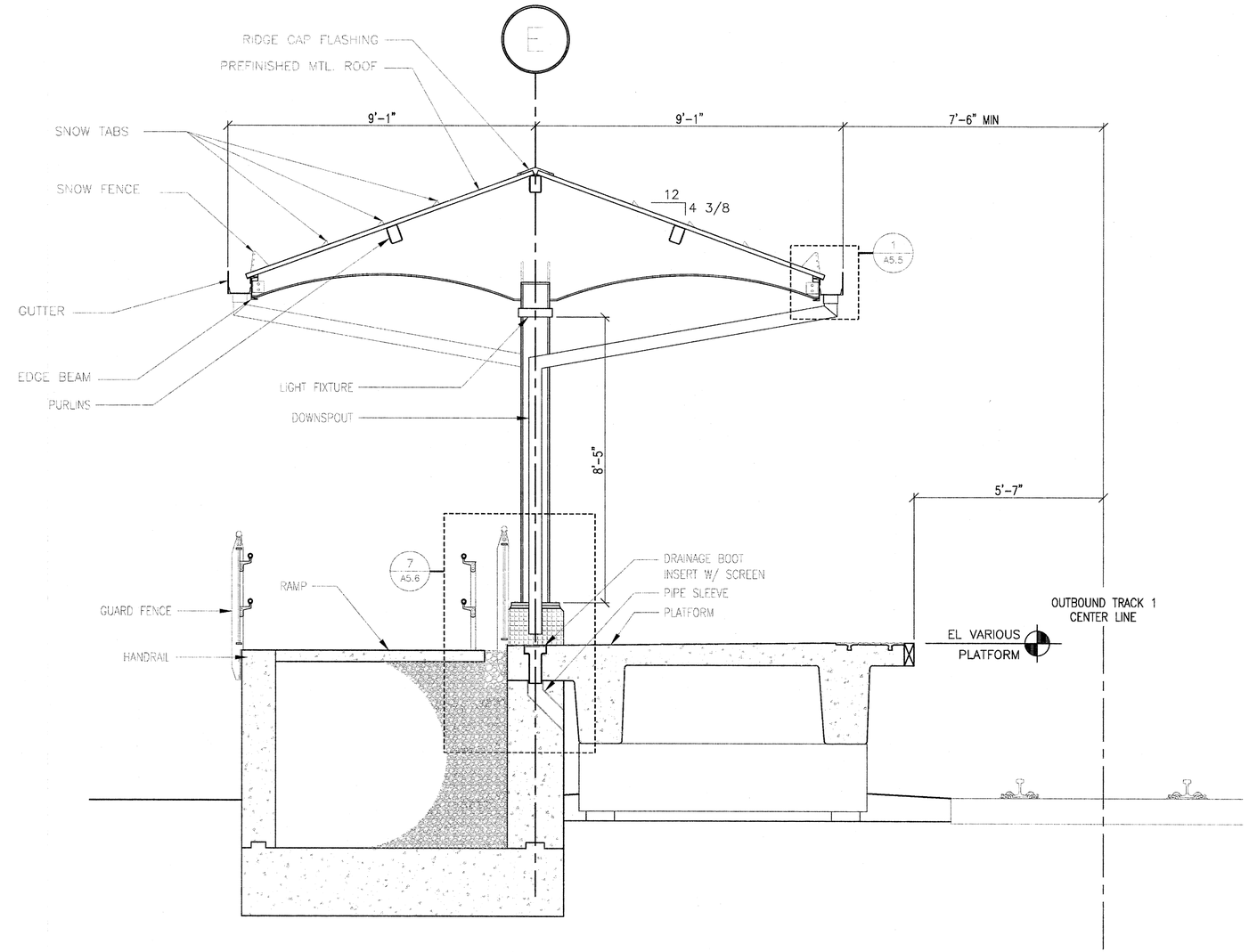

1 SECTION
1/2" = 1'-0"

0 1 2 4
SCALE: 1/2" = 1'-0"

FILE NAME: C:\Documents and Settings\Mackintosh LBA\local settings\temp\AcPublish_544\ 03 A-SE0001.dwg
PLOT DATE: May 17, 2012 – 10:30am

REGISTERED ARCHITECT
MICHEL A. BASKIN
No.4457
BOSTON
MA
COMMONWEALTH OF MASSACHUSETTS

MASSACHUSETTS BAY TRANSPORTATION AUTHORITY

FITCHBURG COMMUTER RAIL LINE
IMPROVEMENT PROJECT
CONTRACT NO. G67PS01

SOUTH ACTON STATION
OUTBOUND CANOPY
SECTION

ISSUE	DATE	DESCRIPTION	BY	CHKD.	APP.

HNTB
300 APOLLO DRIVE
CHELMSFORD, MA 01824
(978) 905-4000

PROJECT MANAGER 5/30/12 Date

MASSACHUSETTS BAY TRANSPORTATION AUTHORITY
APPROVED BY:
PROJECT MANAGER 6/30/12 Date

Lozano, Baskin, and Associates, Inc.
Architecture•Urban Design•City Planning
205 Mt. Auburn St. Watertown, MA 02472

HORIZ: N/A	DES. BY	DR. BY	CHK. BY	PLAN NO. 168604	ISSUE
VERT: N/A	MB DW	DW	MB		
DATE: 05/17/12				SHEET A-4.12	

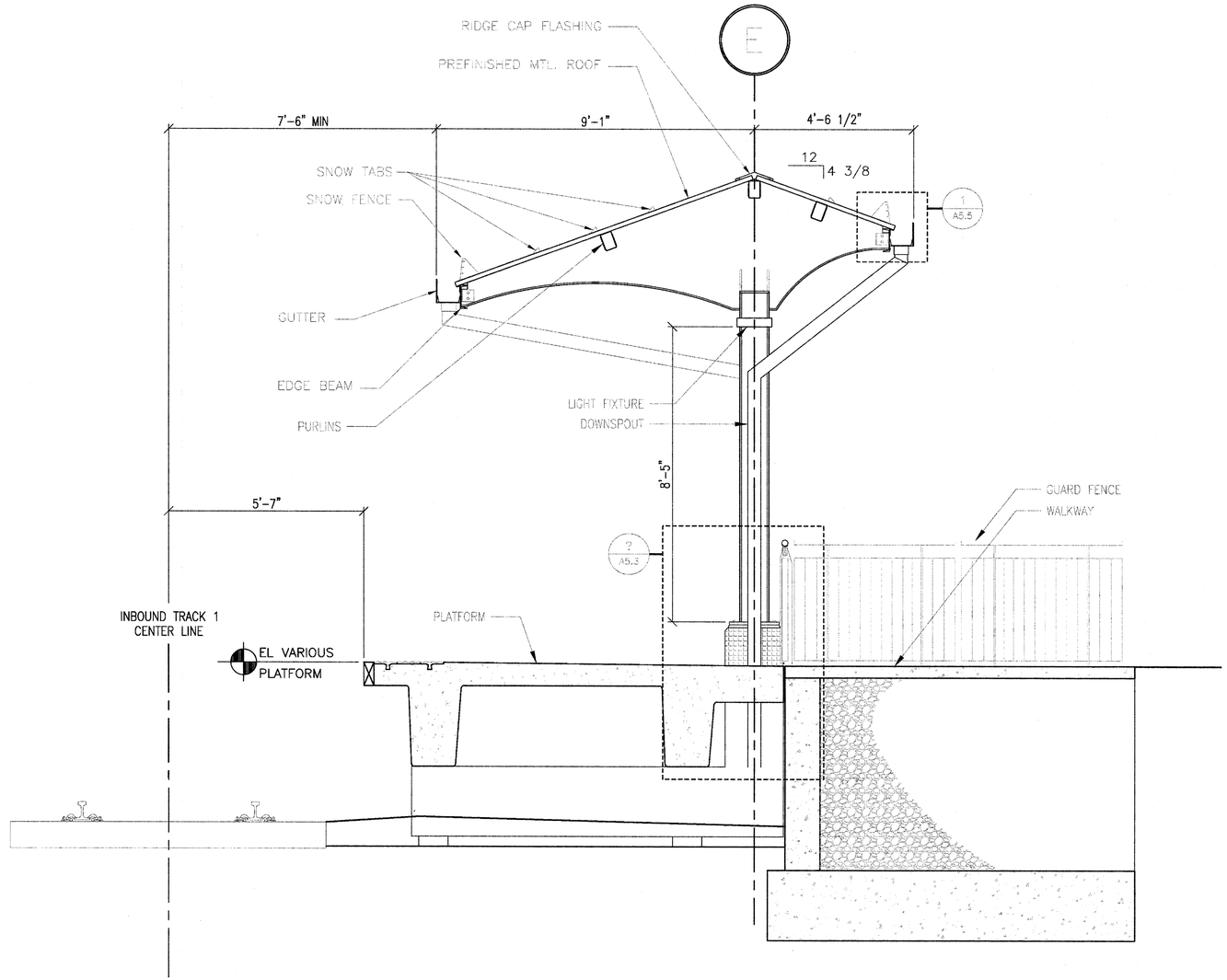

1 SECTION
1/2" = 1'-0"

0 1 2 4
SCALE: 1/2" = 1'-0"

REGISTERED ARCHITECT
MICHAEL A. BASKIN
No.4453
BOSTON, MA
COMMONWEALTH OF MASSACHUSETTS

MASSACHUSETTS BAY TRANSPORTATION AUTHORITY

FITCHBURG COMMUTER RAIL LINE
IMPROVEMENT PROJECT
CONTRACT NO. G67PS01

SOUTH ACTON STATION
INBOUND CANOPY
SECTION

ISSUE	DATE	DESCRIPTION	BY	CHKD.	APP.

HNTB
300 APOLLO DRIVE
CHELMSFORD, MA 01824
(978) 905-4000

PROJECT MANAGER — Date 5/30/12

MASSACHUSETTS BAY TRANSPORTATION AUTHORITY
APPROVED BY
PROJECT MANAGER — Date 6/30/12

Lozano, Baskin, and Associates, Inc.
Architecture•Urban Design•City Planning
205 Mt. Auburn St. Watertown, MA 02472

HORIZ: N/A	DES. BY	DR. BY	CHK. BY	PLAN NO. 168605	ISSUE
VERT: N/A	MB DW	DW	MB		
DATE: 05/17/12				SHEET A-4.13	

FILE NAME: C:\Documents and Settings\Mackintosh LBA\local settings\temp\AcPublish_544\ 03 A-SE0001.dwg
PLOT DATE: May 17, 2012 – 10:30am

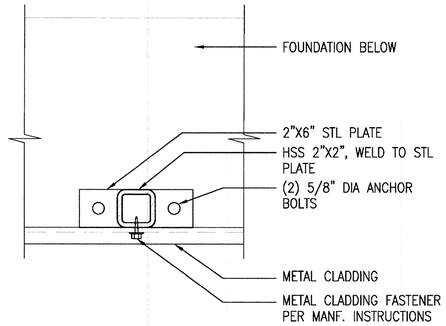

1 DETAIL: METAL CLADDING SUPPORT
3" = 1'-0"

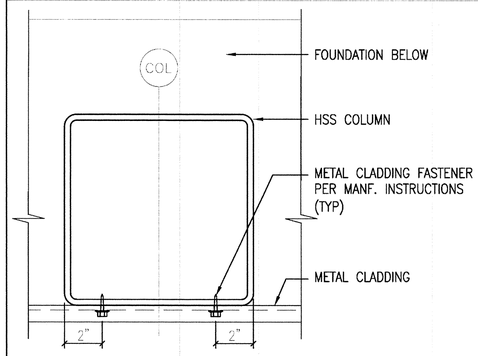

2 DETAIL: METAL CLADDING @ COL.
3" = 1'-0"

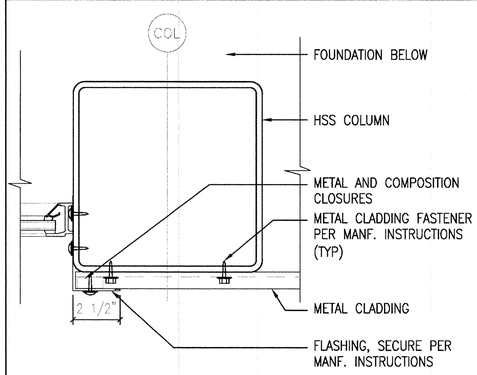

3 DETAIL:METAL CLADDING CLOSURE
3" = 1'-0"

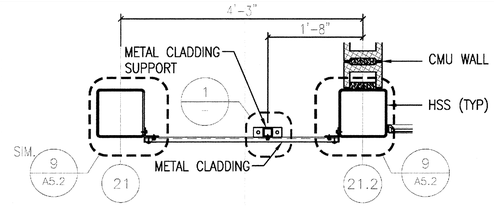

E WALL TYPE: EXTERIOR
3/4"=1'-0"

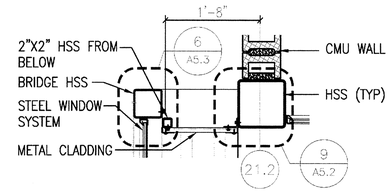

F WALL TYPE: EXTERIOR
3/4"=1'-0"

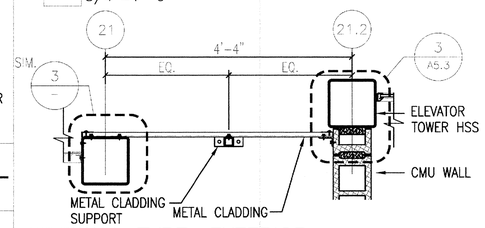

G WALL TYPE: EXTERIOR
3/4"=1'-0"

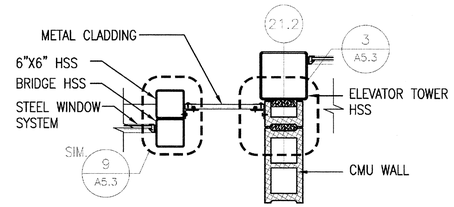

H WALL TYPE: EXTERIOR
3/4"=1'-0"

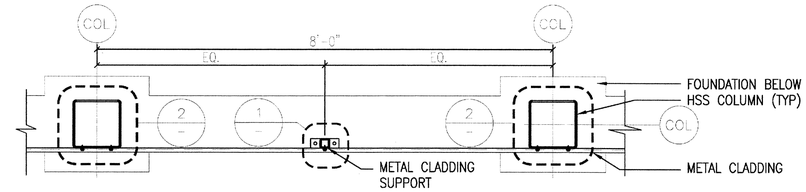

A WALL TYPE: EXTERIOR
3/4"=1'-0"

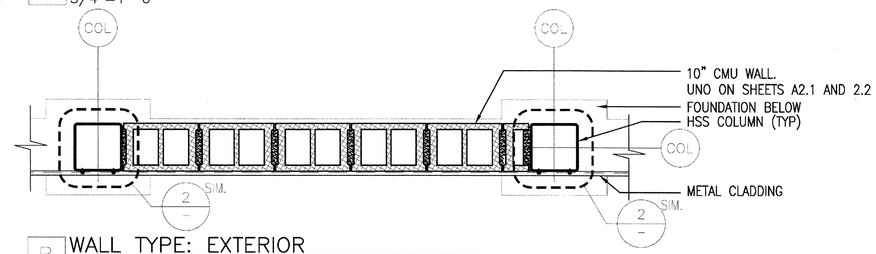

B WALL TYPE: EXTERIOR
3/4"=1'-0"

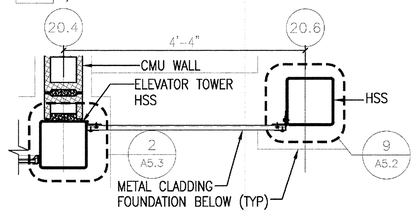

J WALL TYPE: EXTERIOR
3/4"=1'-0"

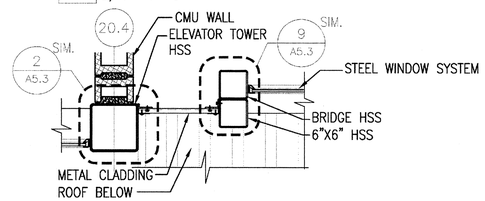

K WALL TYPE: EXTERIOR
3/4"=1'-0"

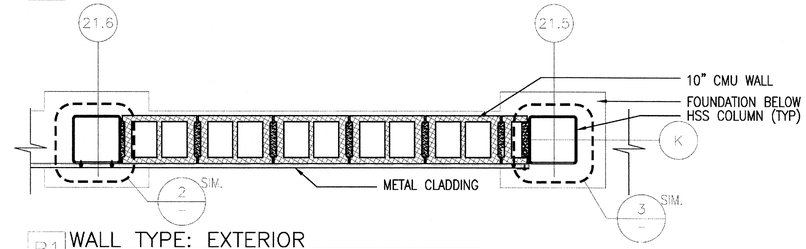

B1 WALL TYPE: EXTERIOR
3/4"=1'-0"

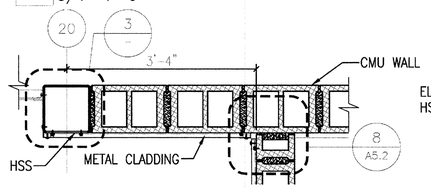

L WALL TYPE: EXTERIOR
3/4"=1'-0"

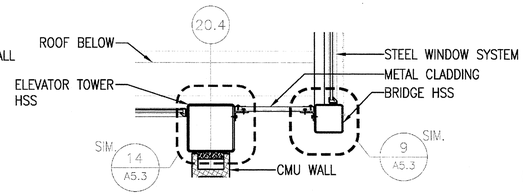

M WALL TYPE: EXTERIOR
3/4"=1'-0"

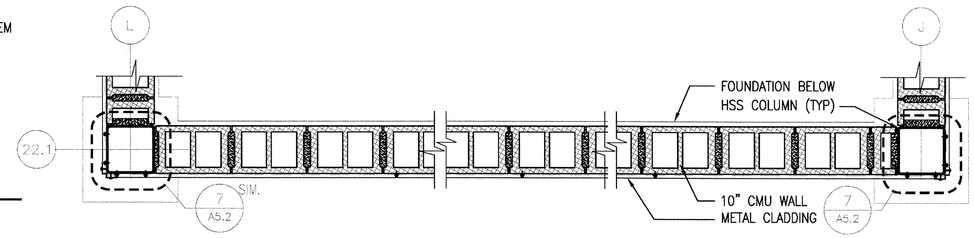

C WALL TYPE: EXTERIOR
3/4"=1'-0"

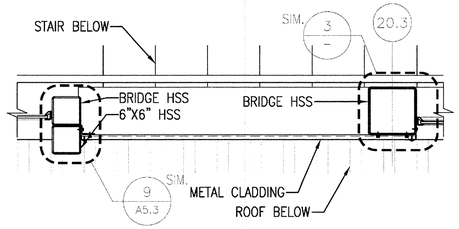

N WALL TYPE: EXTERIOR
3/4"=1'-0"

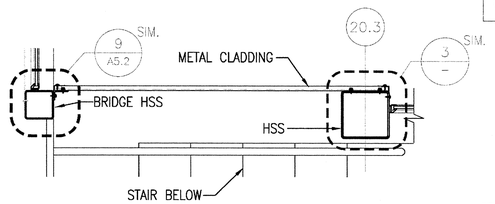

P WALL TYPE: EXTERIOR
3/4"=1'-0"

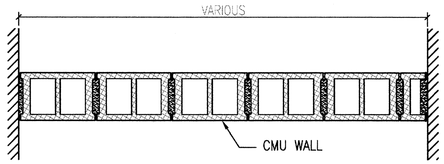

D WALL TYPE: INTERIOR
3/4"=1'-0"

WALL TYPE D NOTE:
TYPE D1 – 8" CMU
TYPE D2 – 10" CMU

0 4" 8" 1'-4"
SCALE: 3/4" = 1'-0"

0 1" 2" 4"
SCALE: 3" = 1'-0"

ISSUE	DATE	DESCRIPTION	BY	CHKD.	APP.

Lozano, Baskin, and Associates, Inc.
Architecture•Urban Design•City Planning
205 Mt. Auburn St. Watertown, MA 02472

MASSACHUSETTS BAY TRANSPORTATION AUTHORITY

FITCHBURG COMMUTER RAIL LINE
IMPROVEMENT PROJECT
CONTRACT NO. G67PS01

SOUTH ACTON STATION
DETAILS
WALL SYSTEMS

HNTB
300 APOLLO DRIVE
CHELMSFORD, MA 01824
(978) 905-4000

PROJECT MANAGER — Date 5/30/12

MASSACHUSETTS BAY TRANSPORTATION AUTHORITY
APPROVED BY: PROJECT MANAGER — Date 6/30/12

HORIZ: N/A	DES. BY	DR. BY	CHK. BY	PLAN NO. 168606	ISSUE
VERT: N/A	MB DW	DW	MB	SHEET A-5.1	
DATE: 05/17/12					

FILE NAME: C:\Documents and Settings\Mackintosh LBA\local settings\temp\AcPublish_544\ 04 A-DE0001.dwg
PLOT DATE: May 17, 2012 – 10:54am

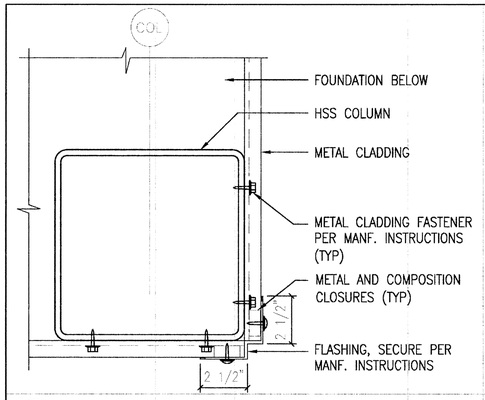

7 DETAIL: METAL CLADDING CORNER
3" = 1'-0"

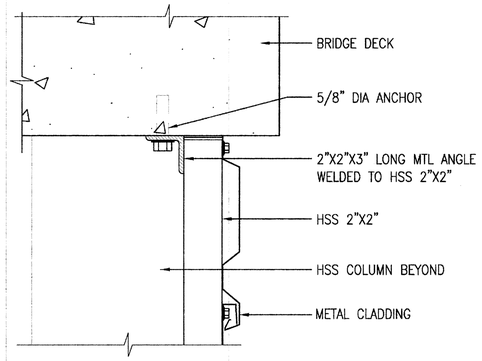

4 DETAIL:METAL CLADDING @ BRIDGE
3" = 1'-0"

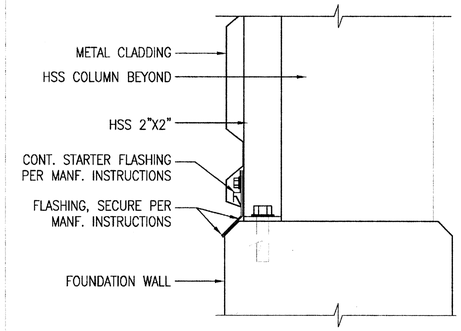

1 DETAIL:METAL CLADDING @ BASE
3" = 1'-0"

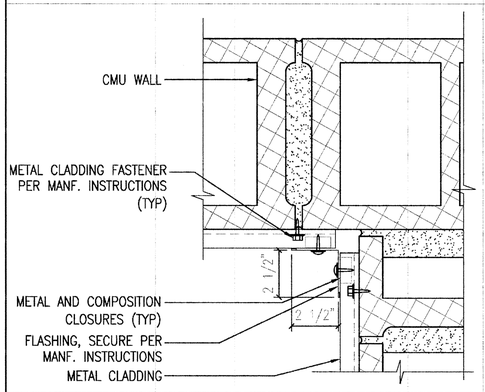

8 DETAIL: METAL CLADDING CORNER
3" = 1'-0"

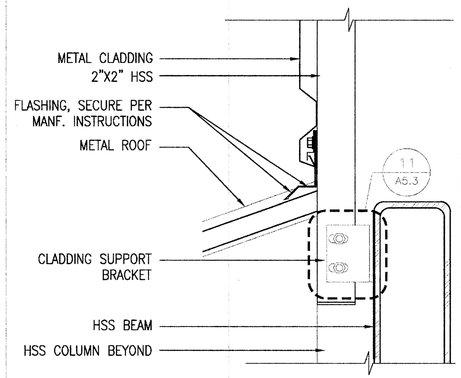

5 DETAIL:METAL CLADDING @ CANOPY
3" = 1'-0"

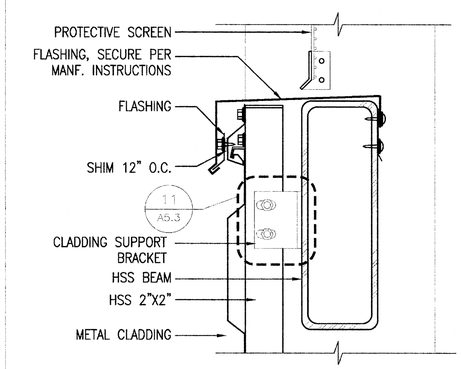

2 DETAIL:METAL CLADDING @ SILL
3" = 1'-0"

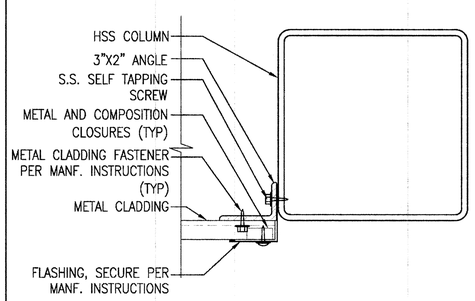

9 DETAIL: METAL CLADDING @ HSS COL
3" = 1'-0"

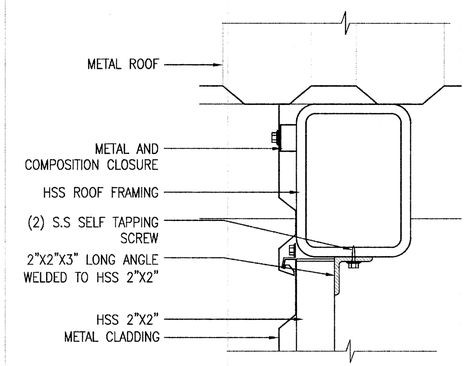

6 DETAIL:METAL CLADDING @ ROOF
3" = 1'-0"

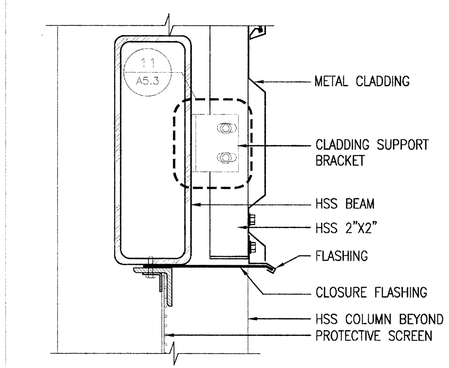

3 DETAIL:METAL CLADDING @ HEAD
3" = 1'-0"

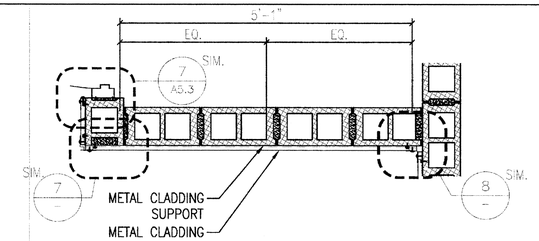

R WALL TYPE: EXTERIOR
3/4"=1'-0"

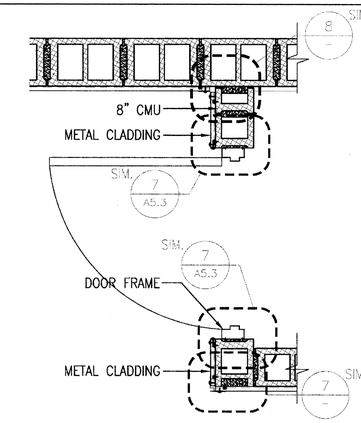

S WALL TYPE: EXTERIOR
3/4"=1'-0"

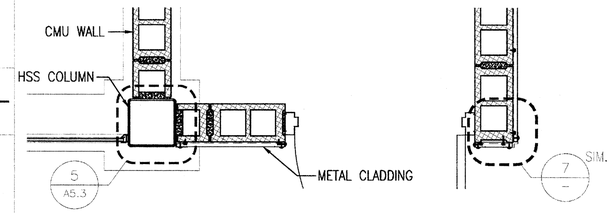

T WALL TYPE: EXTERIOR
3/4"=1'-0"

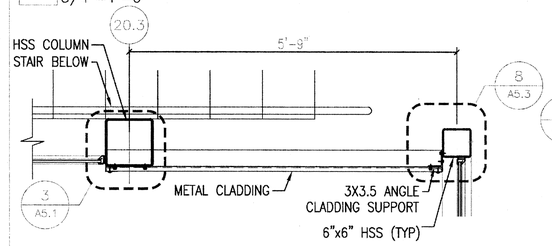

V WALL TYPE: EXTERIOR
3/4"=1'-0"

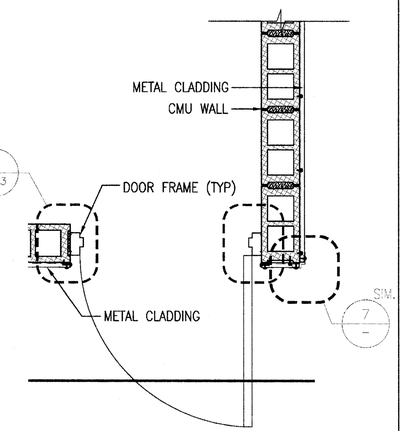

U WALL TYPE: EXTERIOR
3/4"=1'-0"

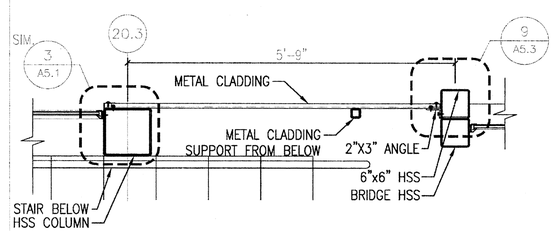

W WALL TYPE: EXTERIOR
3/4"=1'-0"

0 4" 8" 1'-4"
SCALE: 3/4" = 1'-0"

0 1" 2" 4"
SCALE: 3" = 1'-0"

REGISTERED ARCHITECT MICHAEL A. BASKIN No.4453 BOSTON MA COMMONWEALTH OF MASSACHUSETTS

MASSACHUSETTS BAY TRANSPORTATION AUTHORITY

FITCHBURG COMMUTER RAIL LINE
IMPROVEMENT PROJECT
CONTRACT NO. G67PS01

SOUTH ACTON STATION
DETAILS
WALL SYSTEMS

ISSUE	DATE	DESCRIPTION	BY	CHKD.	APP.

HNTB
300 APOLLO DRIVE
CHELMSFORD, MA 01824
(978) 905-4000

PROJECT MANAGER 5/30/12 Date

MASSACHUSETTS BAY TRANSPORTATION AUTHORITY
APPROVED BY:
PROJECT MANAGER 6/13/12 Date

Lozano, Baskin, and Associates, Inc.
Architecture•Urban Design•City Planning
205 Mt. Auburn St. Watertown, MA 02472

HORIZ: N/A	DES. BY MB DW	DR. BY DW	CHK. BY MB	PLAN NO. 168607
VERT: N/A				SHEET A-5.2
DATE: 05/17/12				

ISSUE

FILE NAME: C:\Documents and Settings\Mackintosh LBA\local settings\temp\AcPublish_544\ 04 A-DE0001.dwg
PLOT DATE: May 17, 2012 – 10:56am

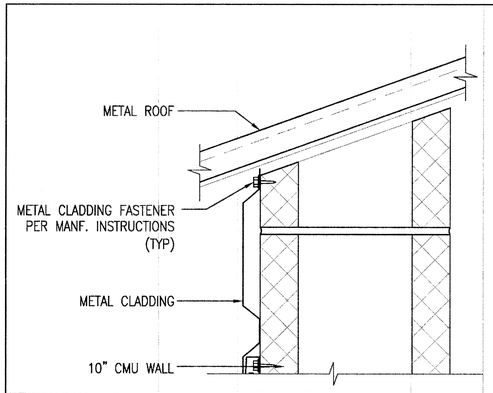

13 DETAIL: METAL CLADDING @ ROOF
3" = 1'-0"

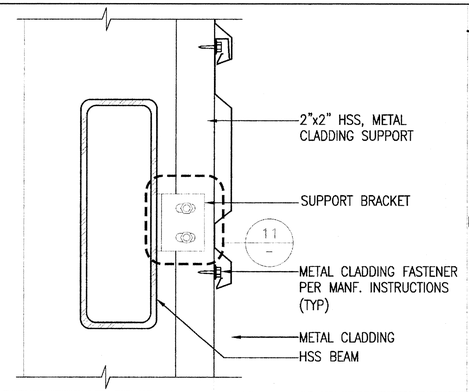

10 DETAIL: METAL CLADDING SUPPORT
3" = 1'-0"

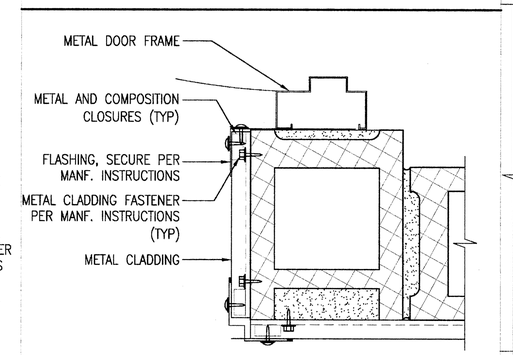

7 DETAIL: METAL CLADDING @ DOOR
3" = 1'-0"

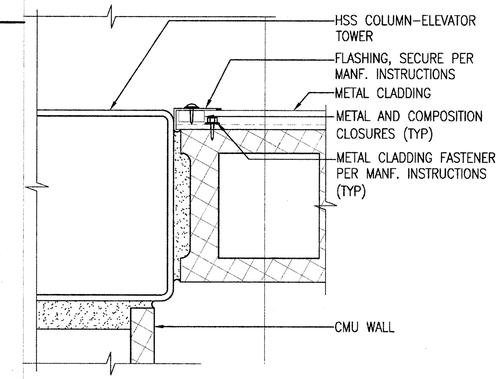

4 DETAIL: METAL CLADDING @ HSS COL
3" = 1'-0"

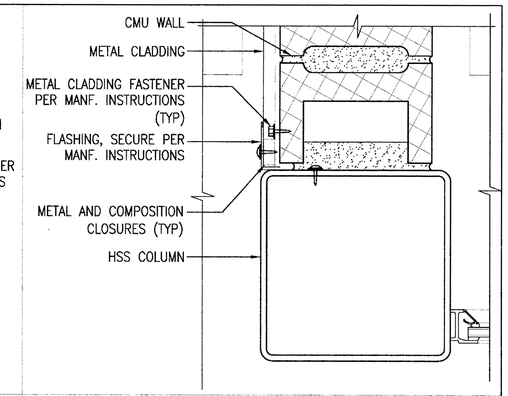

1 DETAIL: METAL CLADDING @ HSS COL
3" = 1'-0"

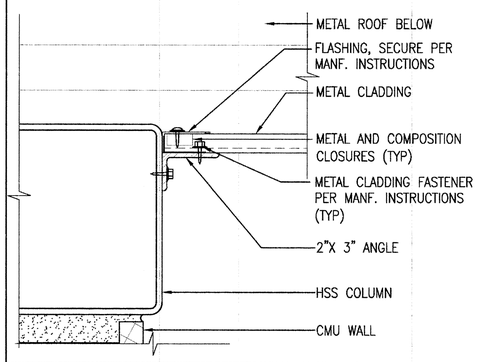

14 DETAIL: METAL CLADDING @ ROOF
3" = 1'-0"

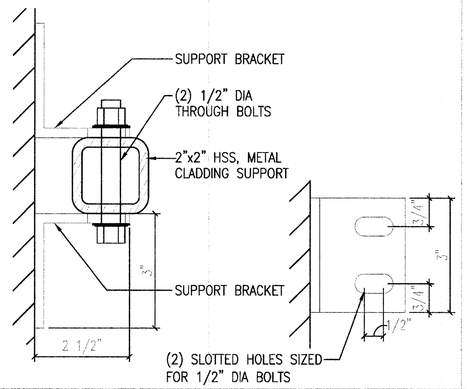

11 DETAIL: SUPPORT BRACKET
3" = 1'-0"

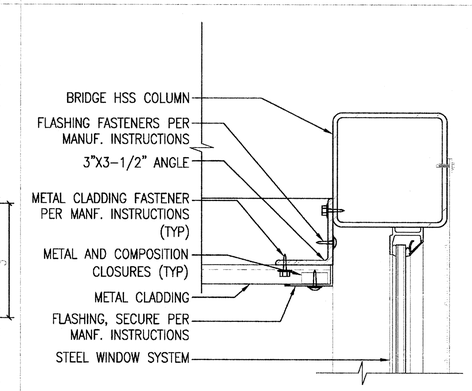

8 DETAIL: METAL CLADDING @ BRIDGE
3" = 1'-0"

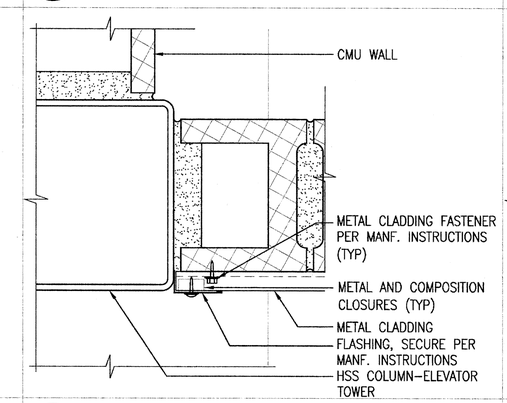

5 DETAIL: METAL CLADDING @ HSS COL
3" = 1'-0"

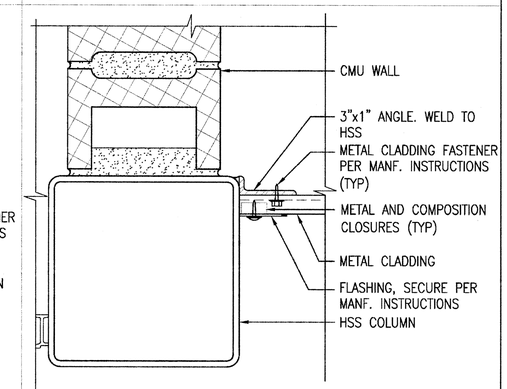

2 DETAIL: METAL CLADDING @ HSS COL
3" = 1'-0"

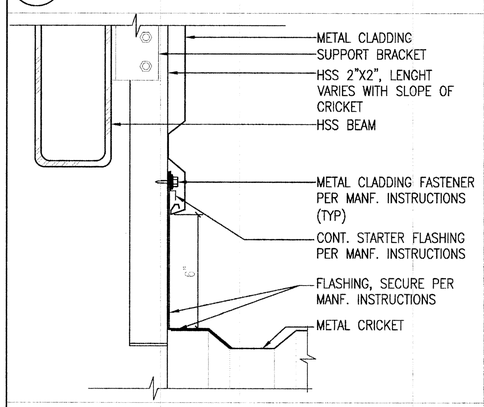

15 DETAIL: METAL CLADDING @ CRICKET
3" = 1'-0"

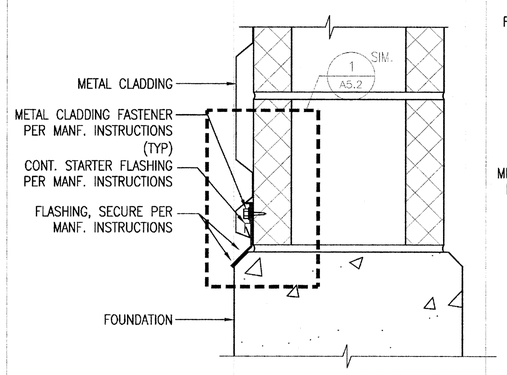

12 DETAIL: METAL CLADDING @ BASE
3" = 1'-0"

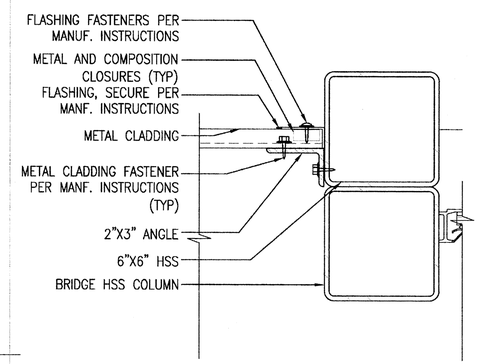

9 DETAIL: METAL CLADDING @ BRIDGE
3" = 1'-0"

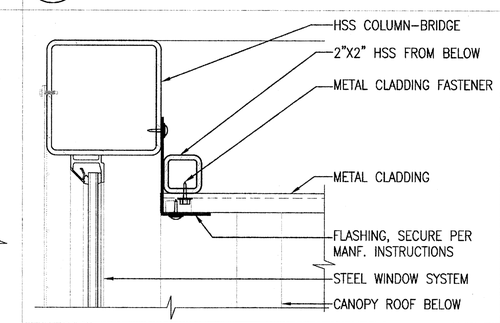

6 DETAIL: METAL CLADDING @ BRIDGE
3" = 1'-0"

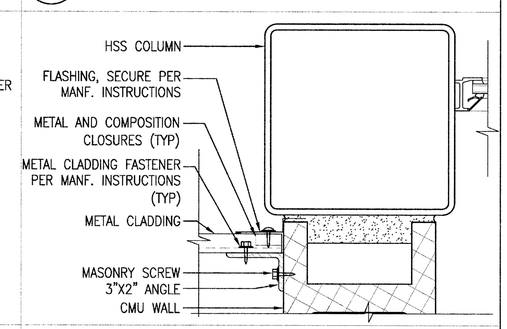

3 DETAIL: METAL CLADDING @ HSS COL
3" = 1'-0"

0 1" 2" 4"
SCALE: 3" = 1'-0"

REGISTERED ARCHITECT MICHAEL A. BURKAM No.4453 BOSTON MA COMMONWEALTH OF MASSACHUSETTS

MASSACHUSETTS BAY TRANSPORTATION AUTHORITY

FITCHBURG COMMUTER RAIL LINE
IMPROVEMENT PROJECT
CONTRACT NO. G67PS01

SOUTH ACTON STATION
DETAILS
WALL SYSTEMS

ISSUE	DATE	DESCRIPTION	BY	CHKD.	APP.

HNTB
300 APOLLO DRIVE
CHELMSFORD, MA 01824
(978) 905-4000

PROJECT MANAGER 5/30/12 Date

MASSACHUSETTS BAY TRANSPORTATION AUTHORITY
APPROVED BY:
PROJECT MANAGER 6/30/12 Date

Lozano, Baskin, and Associates, Inc.
Architecture•Urban Design•City Planning
205 Mt. Auburn St. Watertown, MA 02472

HORIZ: N/A	DES. BY	DR. BY	CHK. BY
VERT: N/A	MB	DW	MB
DATE: 05/17/12	DW		

PLAN NO. 168608
SHEET A-5.3
ISSUE

FILE NAME: C:\Documents and Settings\Mackintosh LBA\local settings\temp\AcPublish_544\ 04 A-DE0001.dwg
PLOT DATE: May 17, 2012 - 10:58am

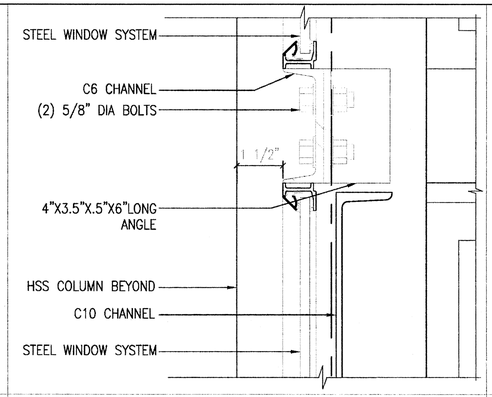

4 DETAIL: WINDOW SUPPORT
3" = 1'-0"

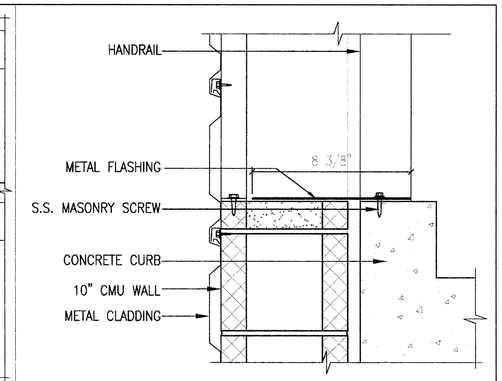

1 DETAIL: FLASHING AT STAIRS
2" = 1'-0"

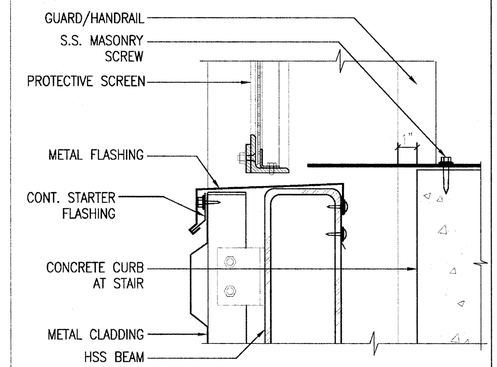

2 DETAIL: FLASHING AT STAIR LANDING
3" = 1'-0"

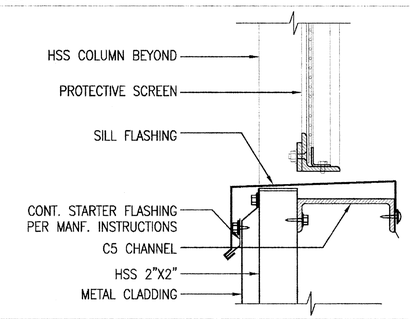

3 DETAIL: FLASHING AT SCREEN BASE
1 1/2" = 1'-0"

0 4" 8" 1'-4"
SCALE: 1 1/2" = 1'-0"

REGISTERED ARCHITECT MICHAEL A. BASKIN No.4453 BOSTON MA COMMONWEALTH OF MASSACHUSETTS

MASSACHUSETTS BAY TRANSPORTATION AUTHORITY

FITCHBURG COMMUTER RAIL LINE
IMPROVEMENT PROJECT
CONTRACT NO. G67PS01

SOUTH ACTON STATION DETAILS

ISSUE	DATE	DESCRIPTION	BY	CHKD.	APP.

Lozano, Baskin, and Associates, Inc.
Architecture•Urban Design•City Planning
205 Mt. Auburn St. Watertown, MA 02472

HNTB
300 APOLLO DRIVE
CHELMSFORD, MA 01824
(978) 905-4000

PROJECT MANAGER 5/30/12 Date

MASSACHUSETTS BAY TRANSPORTATION AUTHORITY
APPROVED BY: 6/30/12
PROJECT MANAGER Date

HORIZ: N/A	DES. BY	DR. BY	CHK. BY	PLAN NO. 168609	ISSUE
VERT: N/A	MB DW	DW	MB		
DATE: 05/17/12				SHEET A-5.4	

FILE NAME: C:\Documents and Settings\Mackintosh LBA\local settings\temp\AcPublish_544\ 04 A-DE0001.dwg
PLOT DATE: May 17, 2012 – 10:58am

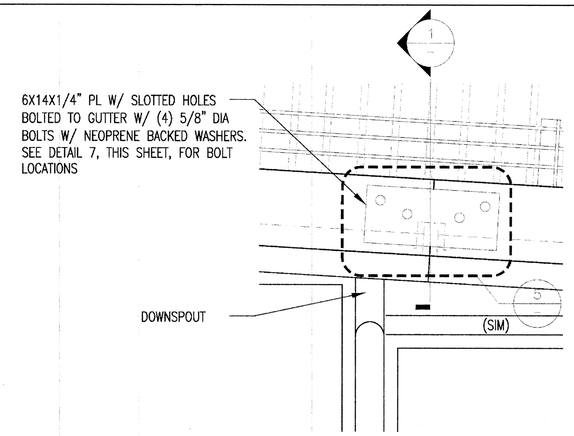

8 ELEVATION: RAMP GUTTER AT JOINT
1 1/2" = 1'-0"

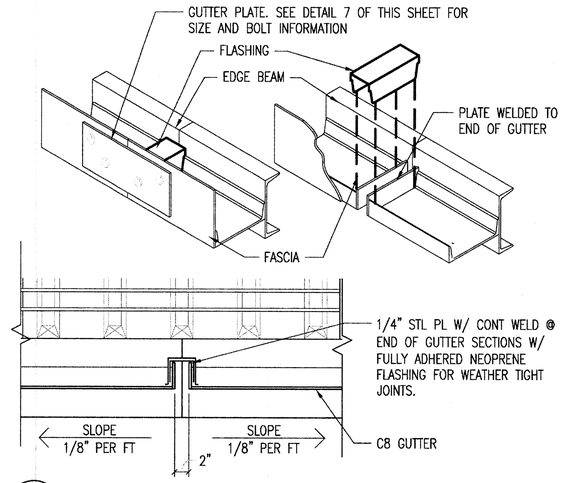

5 SECTION: CANOPY GUTTER AT HIGH POINT
3" = 1'-0"

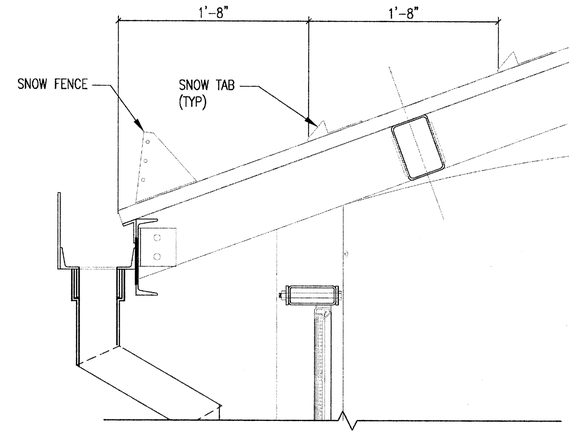

3 DETAIL: SNOW FENCE/TABS
1-1/2" = 1'-0"

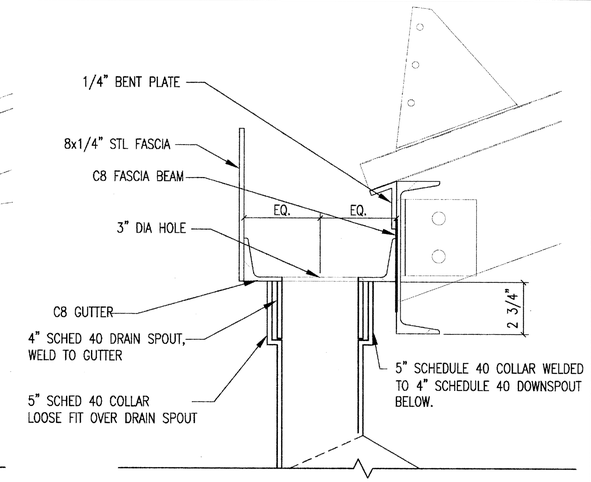

1 DETAIL: GUTTER/DOWNSPOUT
3" = 1'-0"

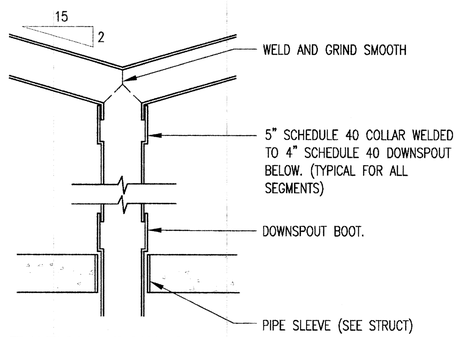

9 ELEVATION: DOWNSPOUT
1 1/2" = 1'-0"

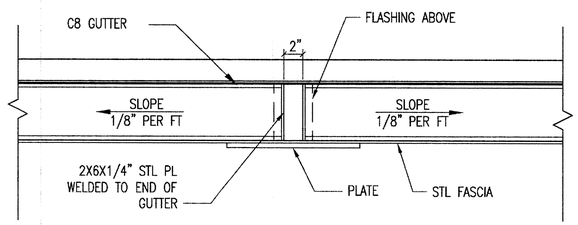

6 PLAN: CANOPY GUTTER AT HIGH POINT
NTS

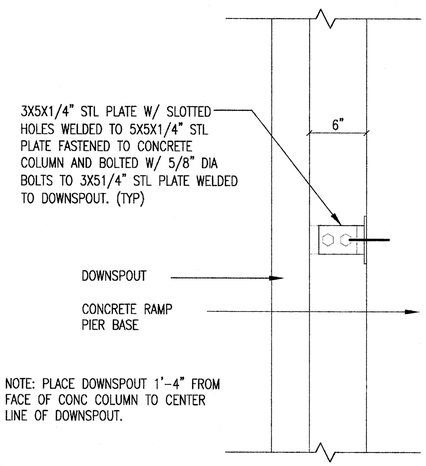

4 DETAIL: DOWNSPOUT AT CONCRETE PIER
1 1/2" = 1'-0"

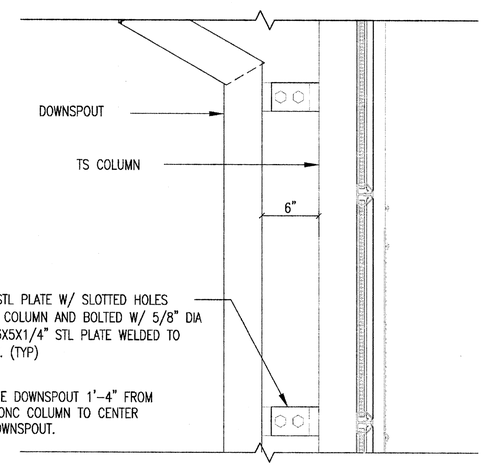

2 DETAIL: DOWNSPOUT AT HSS COLUMN
1 1/2"" = 1'-0"

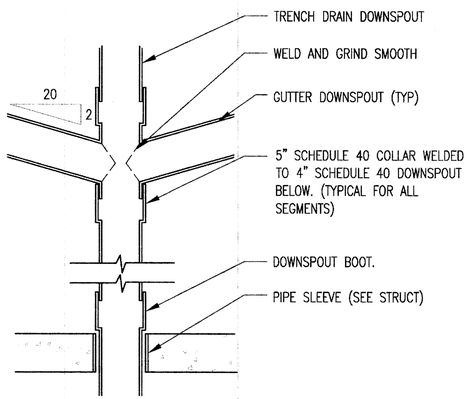

10 ELEVATION: DOWNSPOUT
1 1/2" = 1'-0"

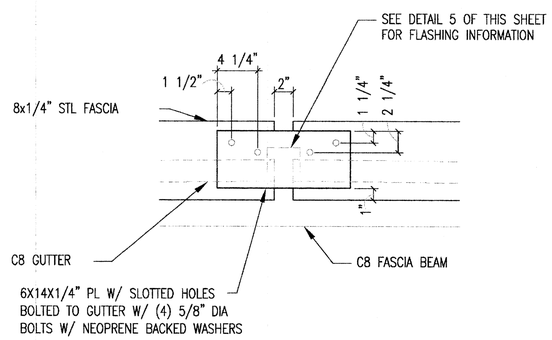

7 ELEVATION: CANOPY GUTTER AT HIGH POINT
1 1/2" = 1'-0"

0 2" 4" 8"
SCALE: 1 1/2" = 1'-0"

0 1" 2" 4"
SCALE: 3" = 1'-0"

REGISTERED ARCHITECT MICHAEL A. BASKIN No.4453 BOSTON MA COMMONWEALTH OF MASSACHUSETTS

MASSACHUSETTS BAY TRANSPORTATION AUTHORITY

FITCHBURG COMMUTER RAIL LINE
IMPROVEMENT PROJECT
CONTRACT NO. G67PS01

SOUTH ACTON STATION
DETAILS
DOWNSPOUTS AND GUTTERS

ISSUE	DATE	DESCRIPTION	BY	CHKD.	APP.

HNTB
300 APOLLO DRIVE
CHELMSFORD, MA 01824
(978) 905-4000

PROJECT MANAGER — Date 5/30/12

MASSACHUSETTS BAY TRANSPORTATION AUTHORITY
APPROVED BY: PROJECT MANAGER — Date 6/30/12

Lozano, Baskin, and Associates, Inc.
Architecture•Urban Design•City Planning
205 Mt. Auburn St. Watertown, MA 02472

HORIZ: N/A	DES. BY	DR. BY	CHK. BY	PLAN NO. 168610	ISSUE
VERT: N/A	MB DW	DW	MB		
DATE: 05/17/12				SHEET A-5.5	

FILE NAME: C:\Documents and Settings\Mackintosh LBA\local settings\temp\AcPublish_544\ 04 A-DE0001.dwg
PLOT DATE: May 17, 2012 – 10:58am

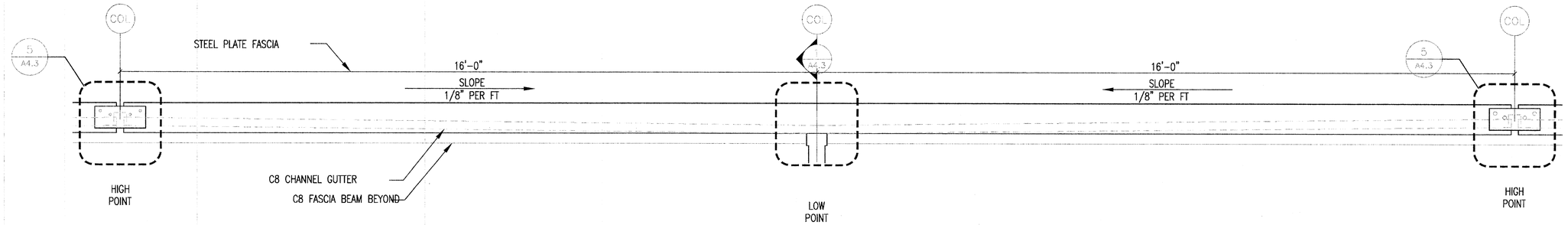

1 DETAIL: TYPICAL CANOPY GUTTER MODULE
3/4" = 1'-0"

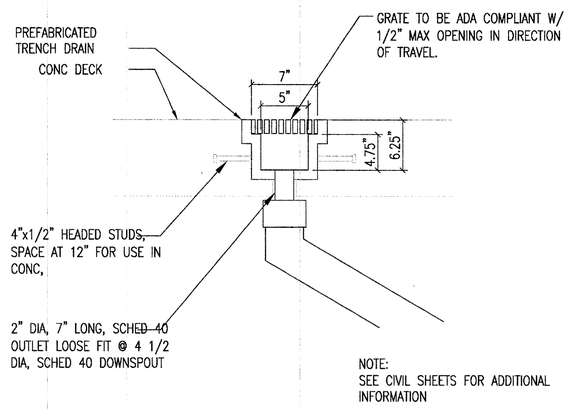

6 TRENCH DRAIN
1 1/2" = 1'-0"

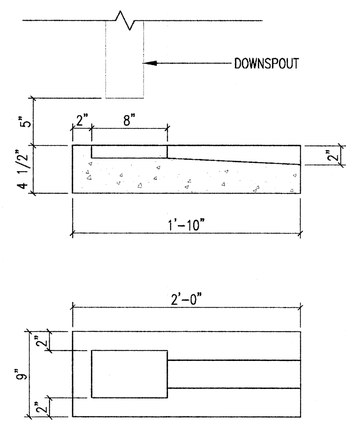

4 DETAIL: SPLASH BLOCK
1 1/2" = 1'-0"

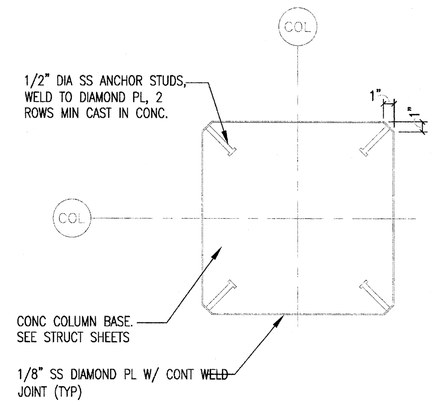

3 DETAIL: COLUMN BASE
1 1/2" = 1'-0"

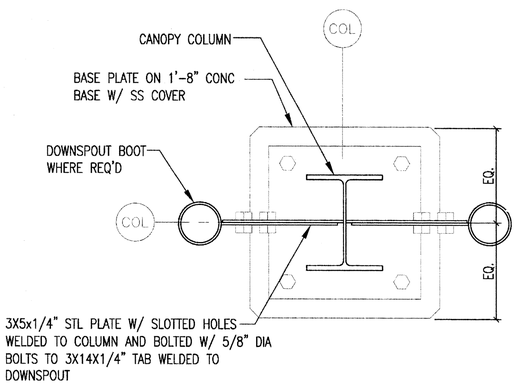

2 DETAIL: DOWNSPOUT CONNECTION AT CANOPY
1 1/2" = 1'-0"

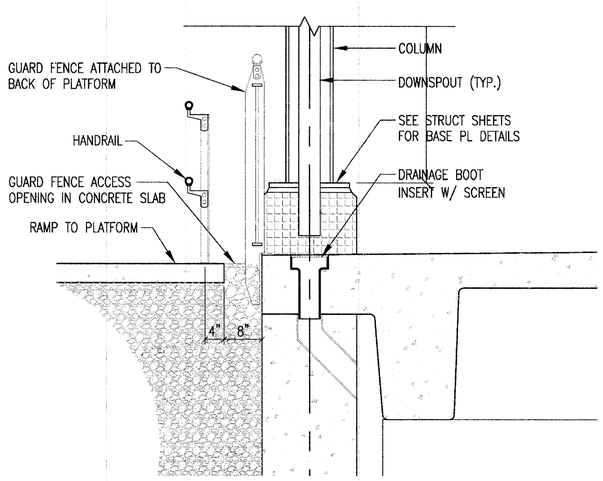

7 DETAIL: COLUMN/DOWNSPOUTS AT CANOPY
3/4" = 1'-0"

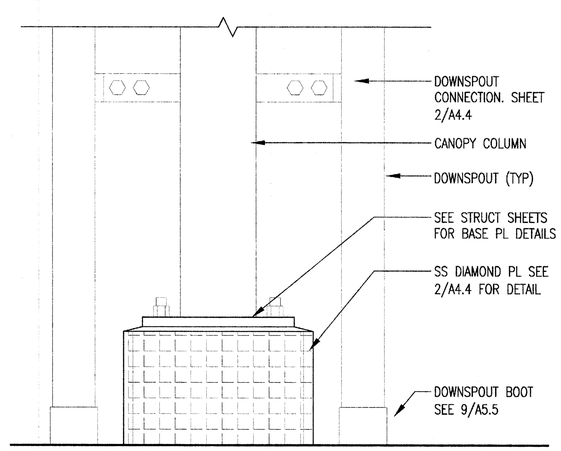

5 DETAIL: COLUMN/DOWNSPOUTS AT CANOPY
1 1/2" = 1'-0"

0 4" 8" 1'-4"
SCALE: 3/4" = 1'-0"

0 2" 4" 8"
SCALE: 1 1/2" = 1'-0"

REGISTERED ARCHITECT MICHAEL A. BASKIN No.4453 BOSTON MA COMMONWEALTH OF MASSACHUSETTS

MASSACHUSETTS BAY TRANSPORTATION AUTHORITY

FITCHBURG COMMUTER RAIL LINE
IMPROVEMENT PROJECT
CONTRACT NO. G67PS01

SOUTH ACTON STATION
DETAILS
MISCELLANEOUS

ISSUE	DATE	DESCRIPTION	BY	CHKD.	APP.

HNTB
300 APOLLO DRIVE
CHELMSFORD, MA 01824
(978) 905-4000

PROJECT MANAGER 5/8/12 Date

MASSACHUSETTS BAY TRANSPORTATION AUTHORITY
APPROVED BY:
PROJECT MANAGER 6/30/12 Date

Lozano, Baskin, and Associates, Inc.
Architecture•Urban Design•City Planning
205 Mt. Auburn St. Watertown, MA 02472

	DES. BY	DR. BY	CHK. BY
HORIZ: N/A	MB	DW	MB
VERT: N/A	DW		
DATE: 05/17/12			

PLAN NO. 168611
SHEET A-5.6
ISSUE

FILE NAME: C:\Documents and Settings\Mackintosh LBA\local settings\temp\AcPublish_544\ 04 A-DE0001.dwg
PLOT DATE: May 17, 2012 - 10:59am

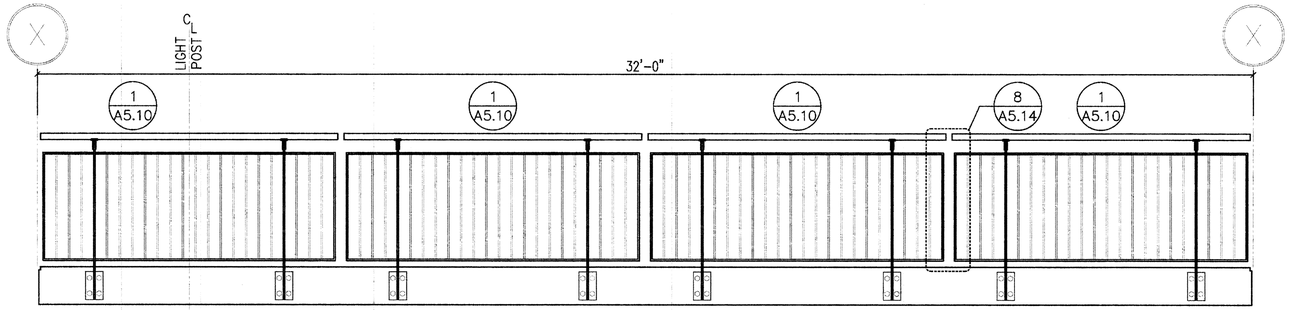

4 TYPICAL GUARD FENCE COMPONANT
1/2" = 1'-0"

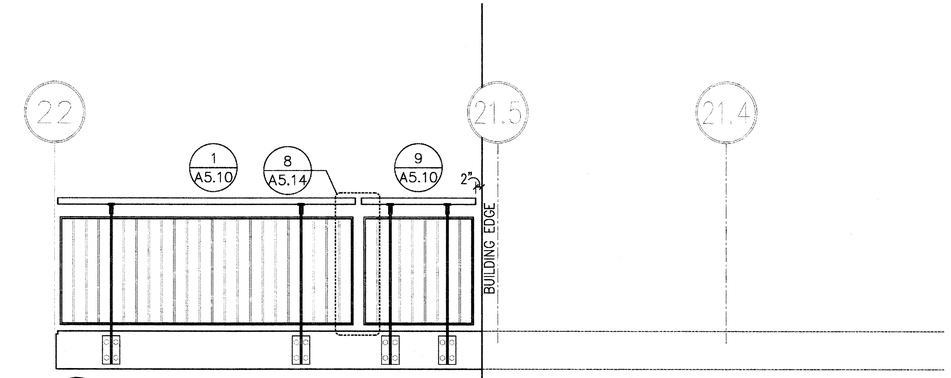

1 GUARD FENCE COMPONANT
1/2" = 1'-0"

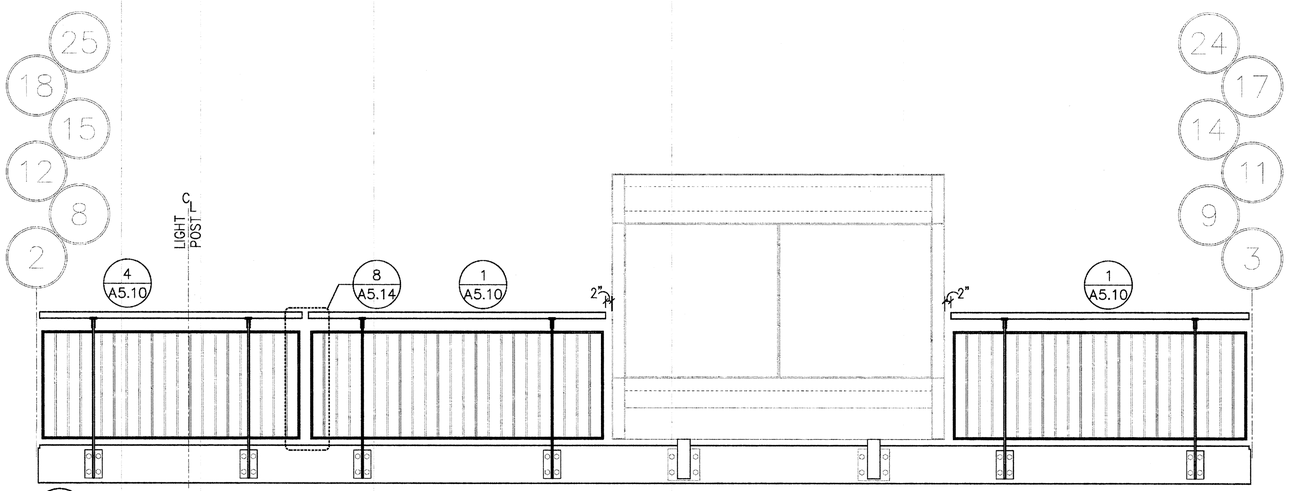

5 GUARD FENCE COMPONANT
1/2" = 1'-0"

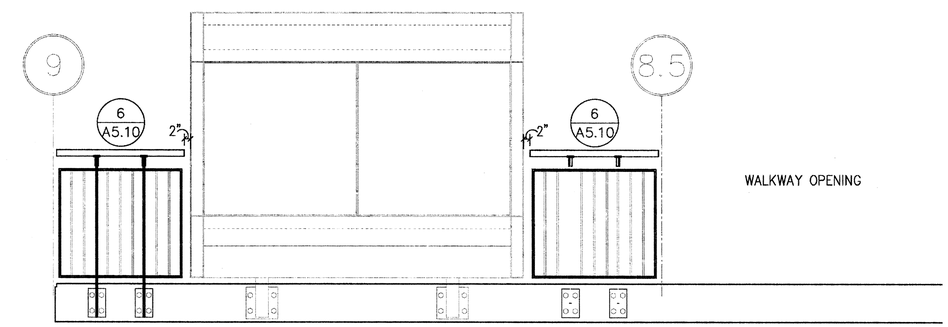

2 GUARD FENCE COMPONANT
1/2" = 1'-0"

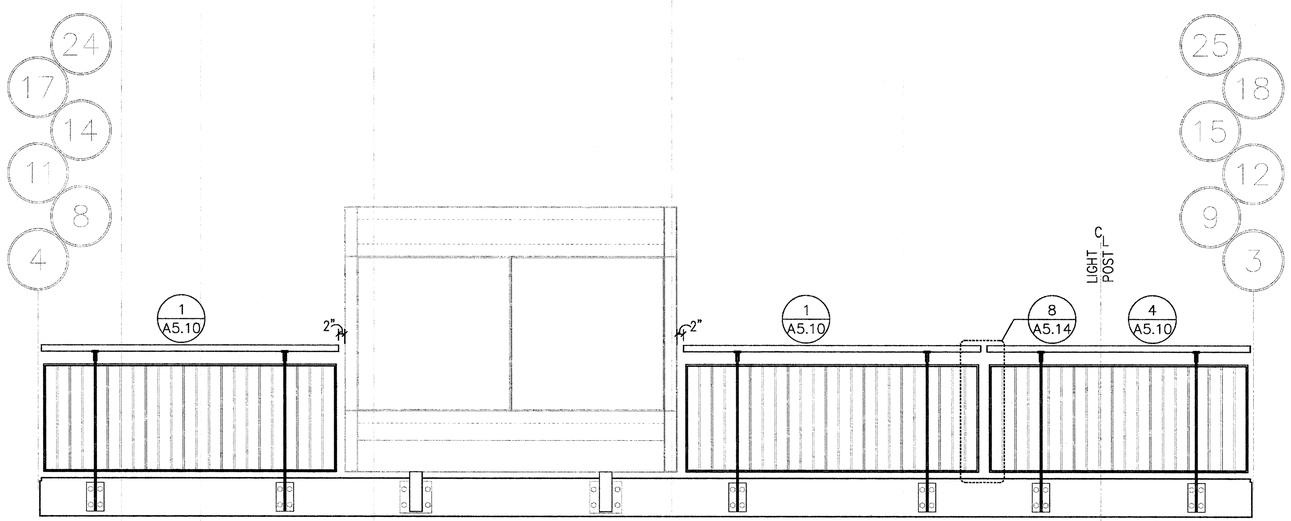

6 GUARD FENCE COMPONANT
1/2" = 1'-0"

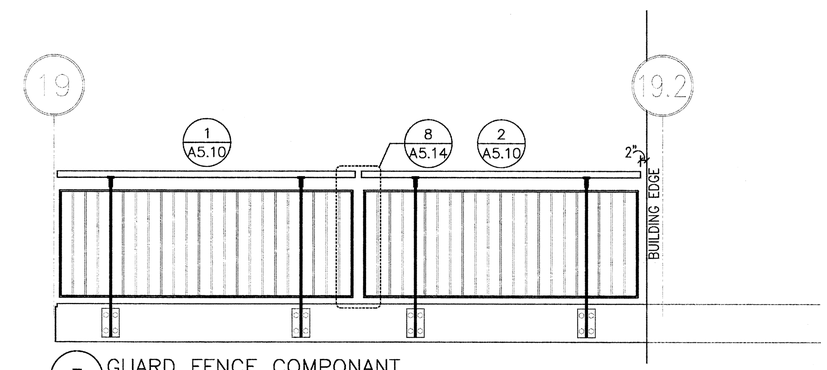

3 GUARD FENCE COMPONANT
1/2" = 1'-0"

0 1' 2' 4'
SCALE: 1/2" = 1'-0"

REGISTERED ARCHITECT MICHAEL A. BISHOP No. 4453 BOSTON MA COMMONWEALTH OF MASSACHUSETTS

MASSACHUSETTS BAY TRANSPORTATION AUTHORITY

FITCHBURG COMMUTER RAIL LINE
IMPROVEMENT PROJECT
CONTRACT NO. G67PS01

SOUTH ACTON STATION GUARD FENCE SCHEDULE

ISSUE	DATE	DESCRIPTION	BY	CHK'D.	APP.

HNTB
300 APOLLO DRIVE
CHELMSFORD, MA 01824
(978) 905-4000

PROJECT MANAGER — Date 5/30/12

MASSACHUSETTS BAY TRANSPORTATION AUTHORITY
APPROVED BY:
PROJECT MANAGER — Date 6/13/12

Lozano, Baskin, and Associates, Inc.
Architecture•Urban Design•City Planning
205 Mt. Auburn St. Watertown, MA 02472

HORIZ: N/A
VERT: N/A
DATE: 05/17/12

DES. BY	DR. BY	CHK. BY
MB DW	DW	MB

PLAN NO. 168612
SHEET A-5.7
ISSUE

FILE NAME: C:\Documents and Settings\Mackintosh LBA\local settings\temp\AcPublish_544\ 04 A-DE0002.dwg
PLOT DATE: May 17, 2012 – 10:59am

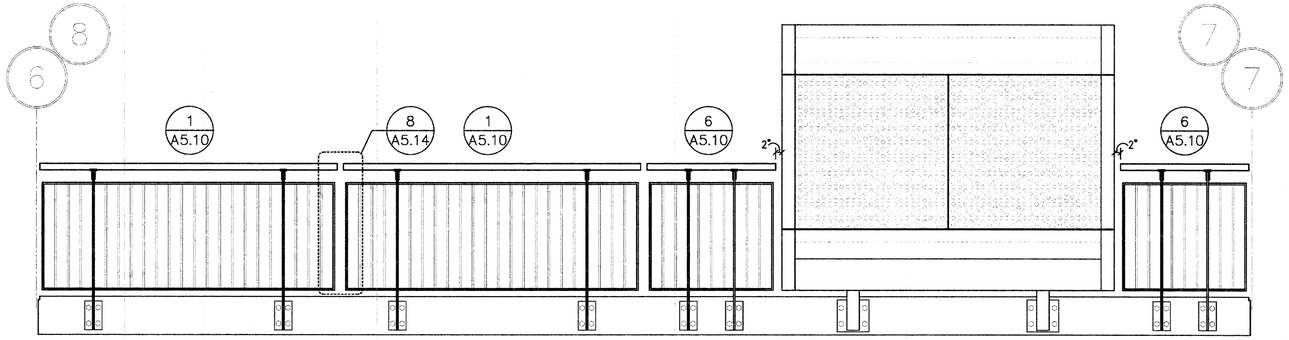

4 GUARD FENCE COMPONANT
1/2" = 1'-0"

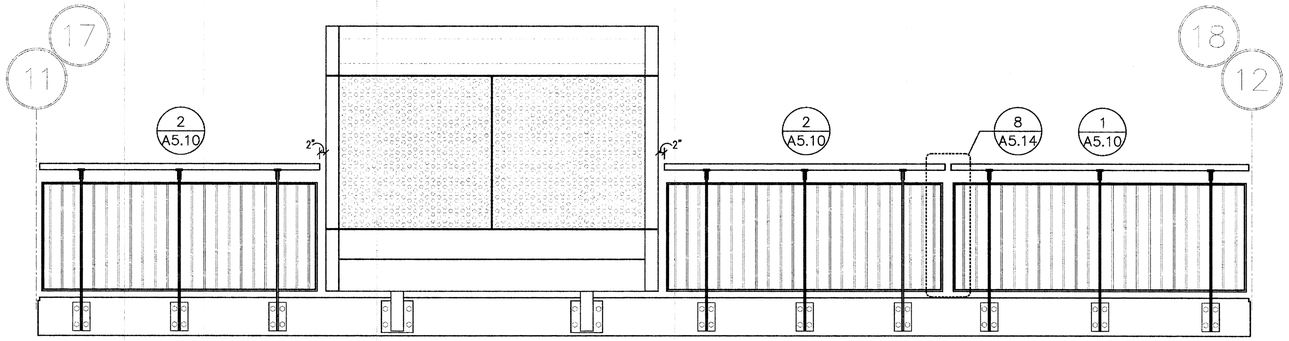

5 GUARD FENCE COMPONANT
1/2" = 1'-0"

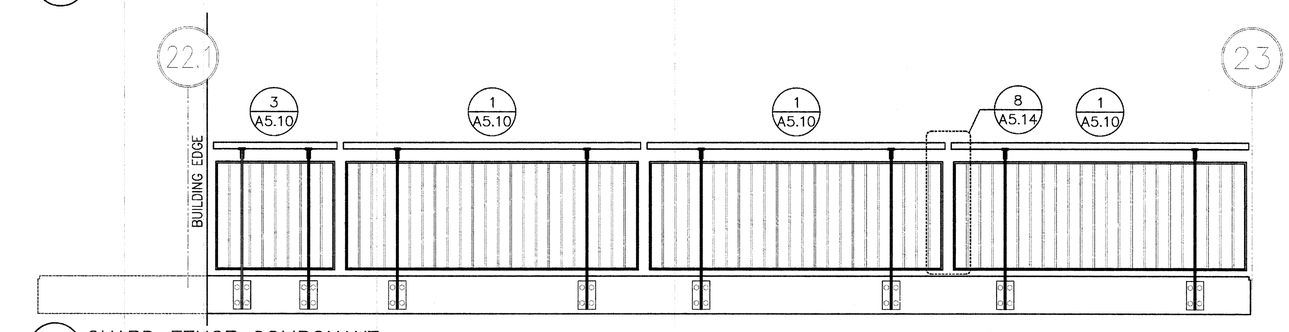

6 GUARD FENCE COMPONANT
1/2" = 1'-0"

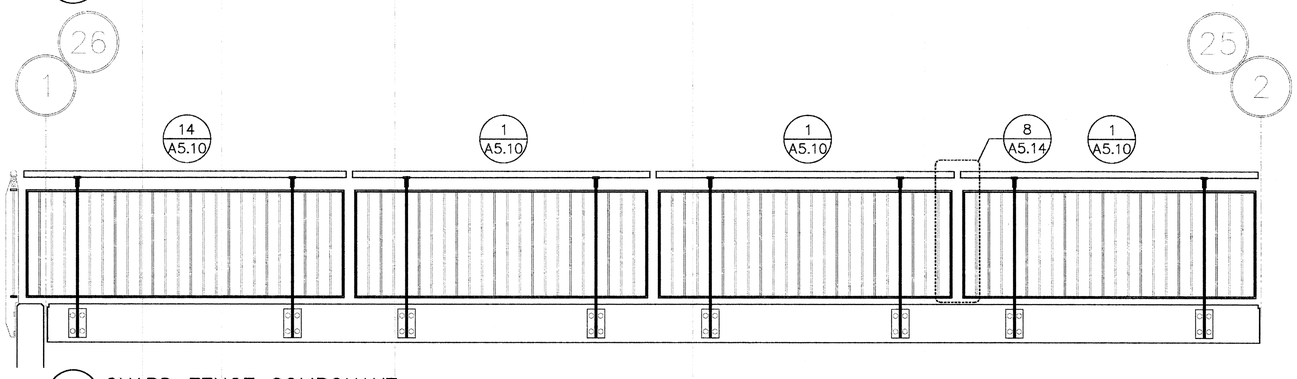

7 GUARD FENCE COMPONANT
1/2" = 1'-0"

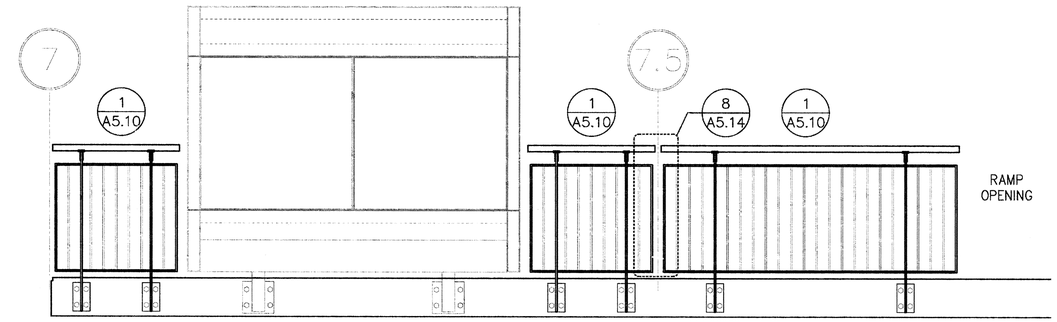

1 GUARD FENCE COMPONANT
1/2" = 1'-0"

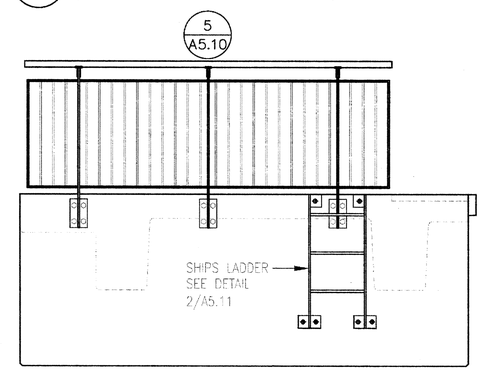

2 GUARD FENCE COMPONANT
1/2" = 1'-0"

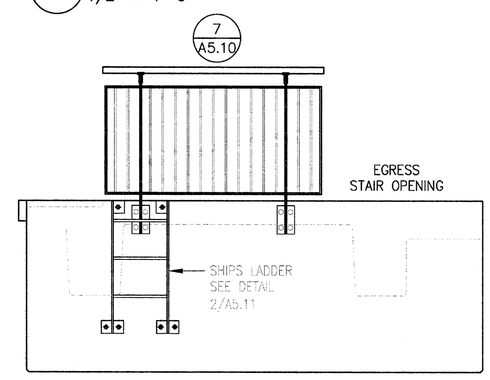

3 GUARD FENCE COMPONANT
1/2" = 1'-0"

0 1' 2' 4'
SCALE: 1/2" = 1'-0"

FILE NAME: C:\Documents and Settings\Mackintosh LBA\local settings\temp\AcPublish_544\ 04 A-DE0002.dwg
PLOT DATE: May 17, 2012 – 10:59am

REGISTERED ARCHITECT
MICHAEL A. BASKIN
No. 4453
BOSTON MA
COMMONWEALTH OF MASSACHUSETTS

MASSACHUSETTS BAY TRANSPORTATION AUTHORITY

FITCHBURG COMMUTER RAIL LINE
IMPROVEMENT PROJECT
CONTRACT NO. G67PS01

SOUTH ACTON STATION
GUARD FENCE
SCHEDULE

ISSUE	DATE	DESCRIPTION	BY	CHKD.	APP.

HNTB
300 APOLLO DRIVE
CHELMSFORD, MA 01824
(978) 905-4000

PROJECT MANAGER 5/30/12 Date

MASSACHUSETTS BAY TRANSPORTATION AUTHORITY
APPROVED BY:
PROJECT MANAGER 6/30/12 Date

Lozano, Baskin, and Associates, Inc.
Architecture•Urban Design•City Planning
205 Mt. Auburn St. Watertown, MA 02472

HORIZ: N/A	DES. BY	DR. BY	CHK. BY	PLAN NO. 168613	ISSUE
VERT: N/A	MB DW	DW	MB		
DATE: 05/17/12				SHEET A-5.8	

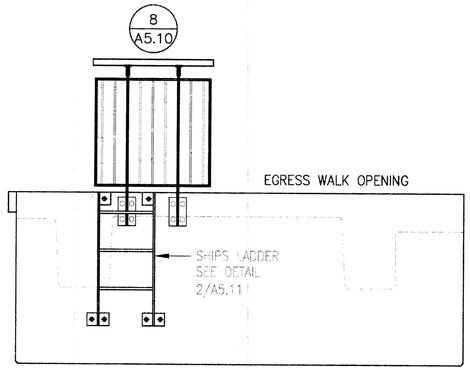

4 GUARD FENCE COMPONANT
1/2" = 1'-0"

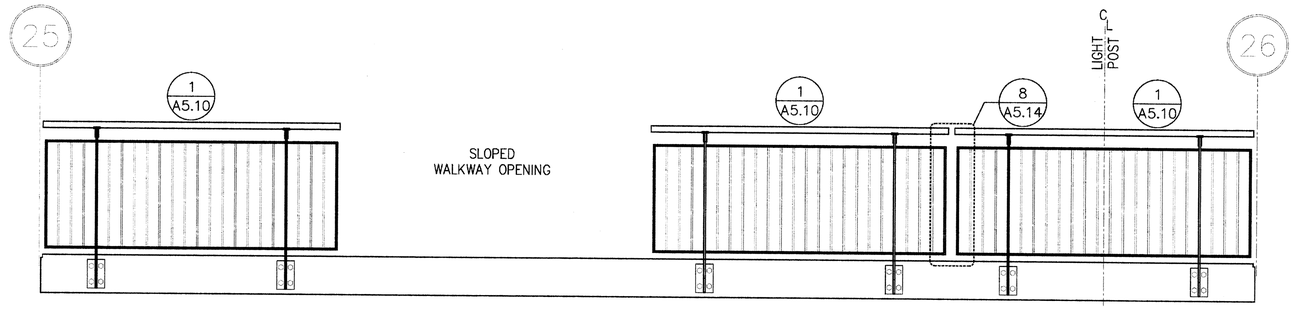

1 GUARD FENCE COMPONANT
1/2" = 1'-0"

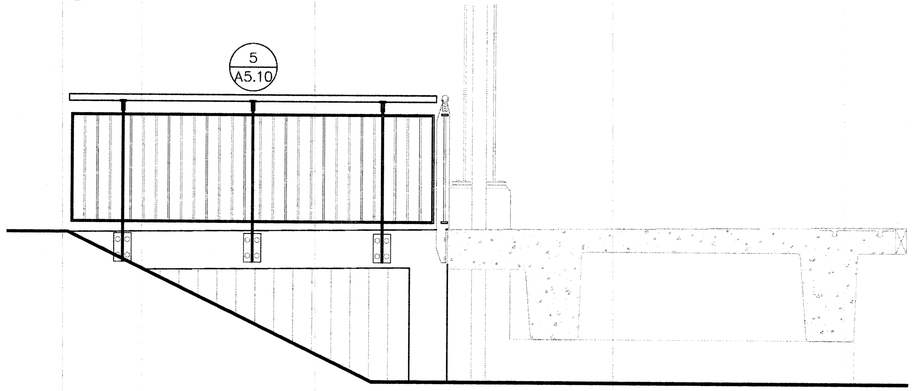

5 GUARD FENCE COMPONANT
1/2" = 1'-0"

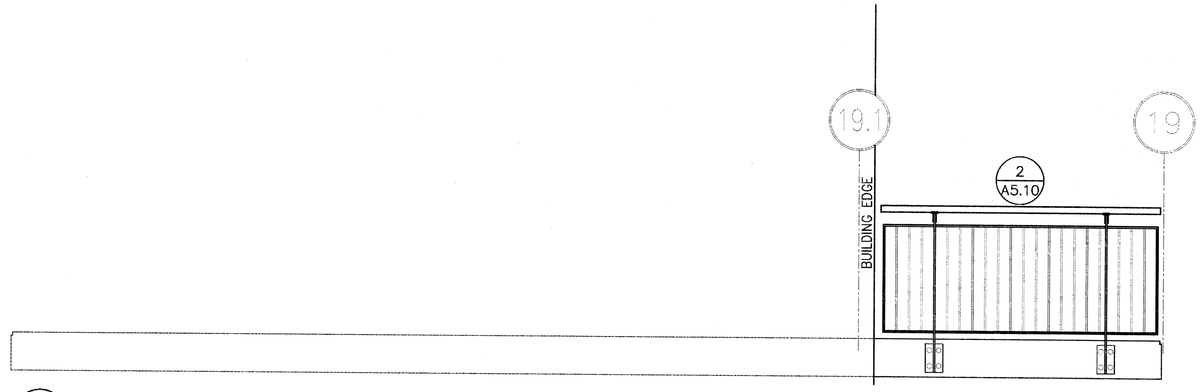

2 GUARD FENCE COMPONANT
1/2" = 1'-0"

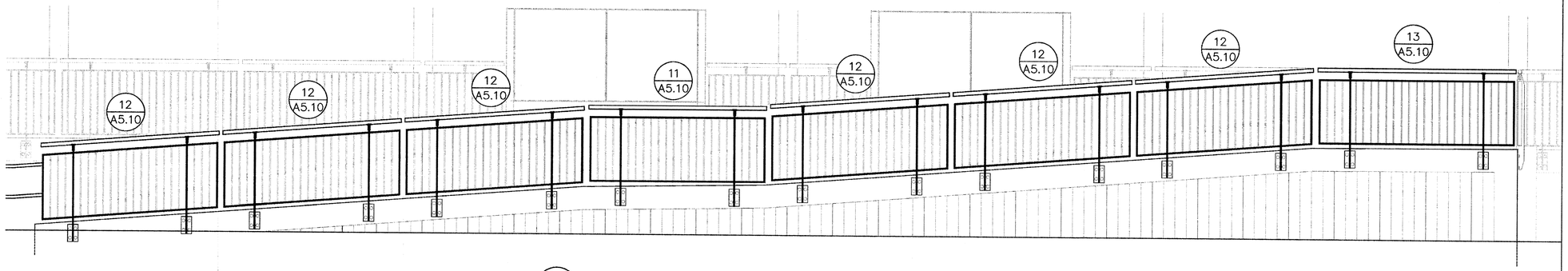

3 GUARD FENCE COMPONANT
1/2" = 1'-0"

0 1' 2' 4'
SCALE: 1/2" = 1'-0"

REGISTERED ARCHITECT
MICHAEL A. BASKIN
No.4453
BOSTON
MA
COMMONWEALTH OF MASSACHUSETTS

MASSACHUSETTS BAY TRANSPORTATION AUTHORITY

FITCHBURG COMMUTER RAIL LINE
IMPROVEMENT PROJECT
CONTRACT NO. G67PS01

SOUTH ACTON STATION
GUARD FENCE
SCHEDULE

ISSUE	DATE	DESCRIPTION	BY	CHKD.	APP.

HNTB
300 APOLLO DRIVE
CHELMSFORD, MA 01824
(978) 905-4000
PROJECT MANAGER 5/25/12 Date

MASSACHUSETTS BAY TRANSPORTATION AUTHORITY
APPROVED BY:
PROJECT MANAGER 6/30/12 Date

Lozano, Baskin, and Associates, Inc.
Architecture•Urban Design•City Planning
205 Mt. Auburn St. Watertown, MA 02472

HORIZ: N/A	DES. BY	DR. BY	CHK. BY	PLAN NO. 168614	ISSUE
VERT: N/A	MB DW	DW	MB		
DATE: 05/17/12				SHEET A-5.9	

FILE NAME: C:\Documents and Settings\Mackintosh LBA\local settings\temp\AcPublish_544\ 04 A-DE0002.dwg
PLOT DATE: May 17, 2012 – 10:59am

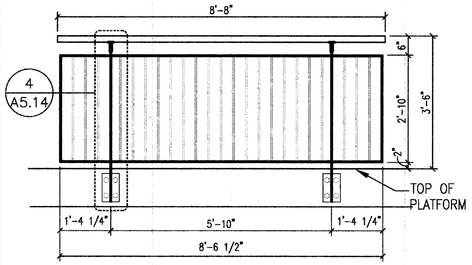

13 GUARD FENCE SEGMENT
1/2" = 1'-0"

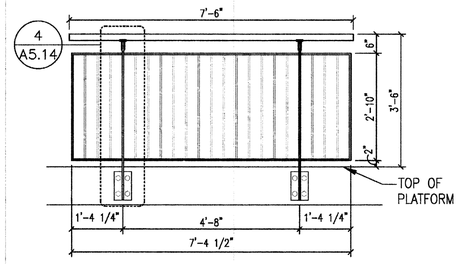

10 GUARD FENCE SEGMENT
1/2" = 1'-0"

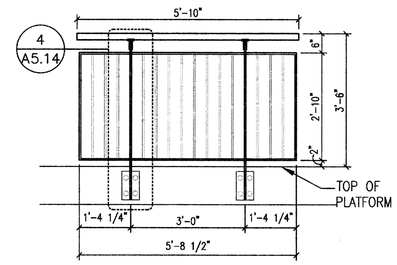

7 GUARD FENCE SEGMENT
1/2" = 1'-0"

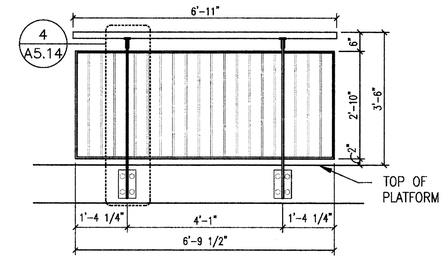

4 GUARD FENCE SEGMENT
1/2" = 1'-0"

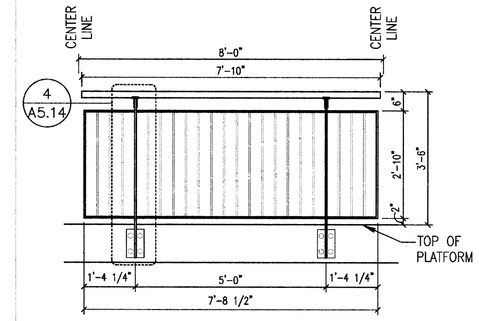

1 TYPICAL GUARD FENCE SEGMENT
1/2" = 1'-0"

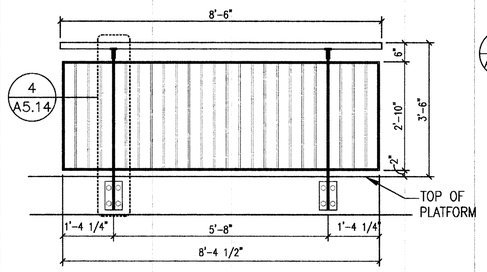

14 GUARD FENCE SEGMENT
1/2" = 1'-0"

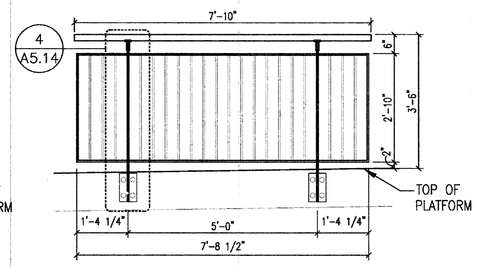

11 GUARD FENCE SEGMENT
1/2" = 1'-0"

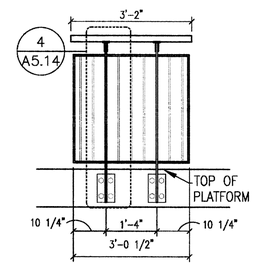

8 GUARD FENCE SEGMENT
1/2" = 1'-0"

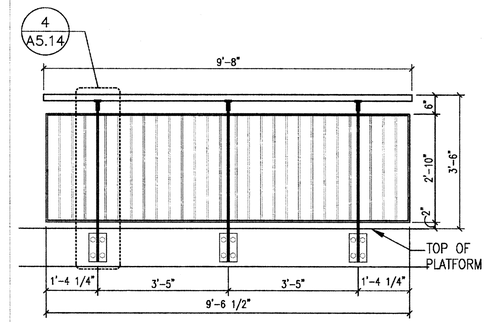

5 GUARD FENCE SEGMENT
1/2" = 1'-0"

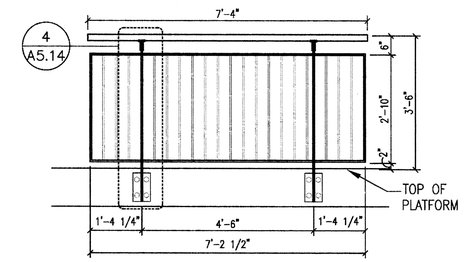

2 GUARD FENCE SEGMENT
1/2" = 1'-0"

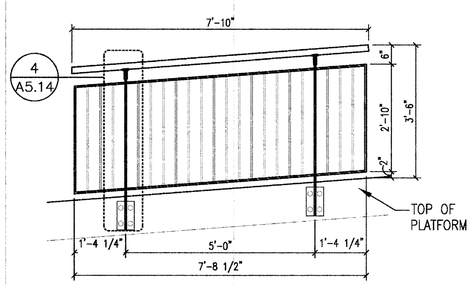

12 GUARD FENCE SEGMENT
1/2" = 1'-0"

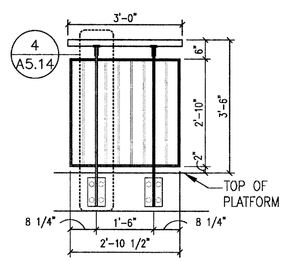

9 GUARD FENCE SEGMENT
1/2" = 1'-0"

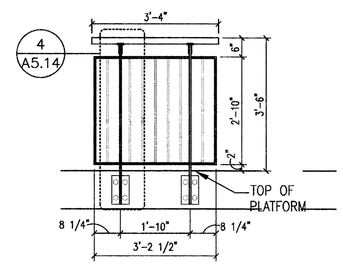

6 GUARD FENCE SEGMENT
1/2" = 1'-0"

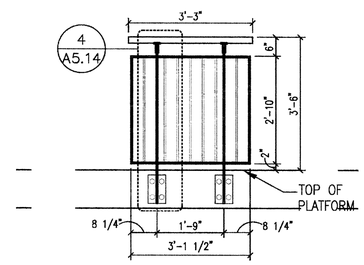

3 GUARD FENCE SEGMENT
1/2" = 1'-0"

REGISTERED ARCHITECT
MICHAEL A. BAGLIN
No. 4453
BOSTON, MA
COMMONWEALTH OF MASSACHUSETTS

MASSACHUSETTS BAY TRANSPORTATION AUTHORITY

FITCHBURG COMMUTER RAIL LINE
IMPROVEMENT PROJECT
CONTRACT NO. G67PS01

SOUTH ACTON STATION GUARD FENCE SCHEDULE

0 1' 2' 4'
SCALE: 1/2" = 1'-0"

ISSUE	DATE	DESCRIPTION	BY	CHKD.	APP.

HNTB
300 APOLLO DRIVE
CHELMSFORD, MA 01824
(978) 905-4000

PROJECT MANAGER — Date 5/30/12

MASSACHUSETTS BAY TRANSPORTATION AUTHORITY
APPROVED BY:
PROJECT MANAGER — Date 6/30/12

Lozano, Baskin, and Associates, Inc.
Architecture•Urban Design•City Planning
205 Mt. Auburn St. Watertown, MA 02472

HORIZ: N/A	DES. BY	DR. BY	CHK. BY	PLAN NO. 168615	ISSUE
VERT: N/A	MB DW	DW	MB		
DATE: 05/17/12				SHEET A-5.10	

FILE NAME: C:\Documents and Settings\Mackintosh LBA\local settings\temp\AcPublish_544\ 04 A-DE0002.dwg
PLOT DATE: May 17, 2012 – 10:59am

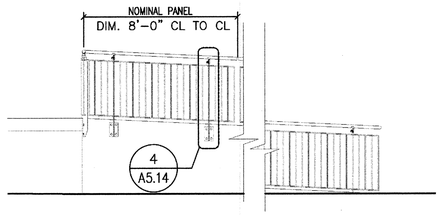

8 / – ELEVATION: PLATFORM EGRESS WALK
1/4" = 1'-0"

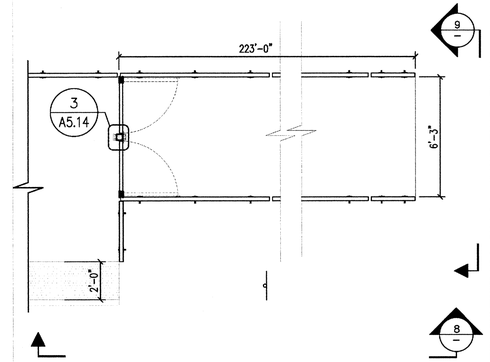

5 / A-1.5 PLAN: PLATFORM EGRESS WALK
1/4" = 1'-0"

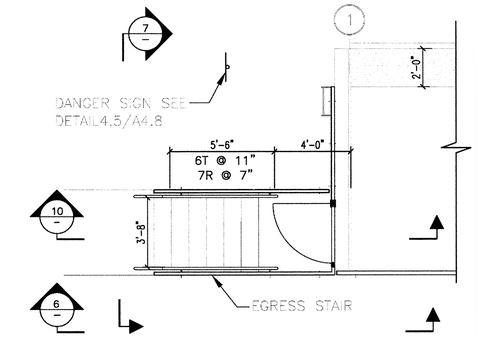

1 / A-1.2 PLAN: PLATFORM EGRESS STAIR
1/4" = 1'-0"

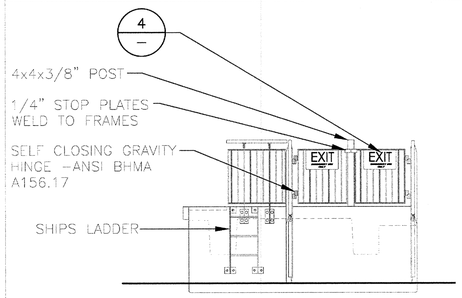

9 / – ELEVATION: PLATFORM EGRESS WALK
1/4" = 1'-0"

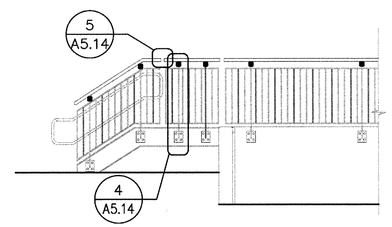

6 / – ELEVATION: PLATFORM EGRESS STAIR
1/4" = 1'-0"

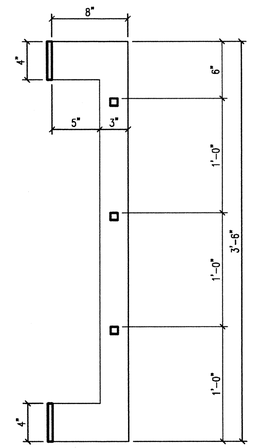

3 / – DETAIL: SHIPS LADDER
1/4" = 1'-0"

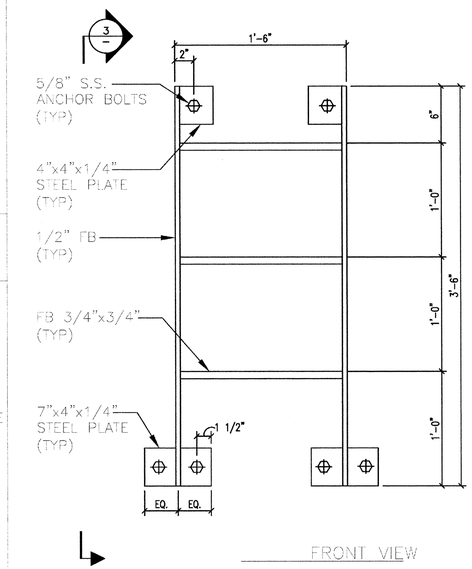

2 / – DETAIL: SHIPS LADDER
1/4" = 1'-0"

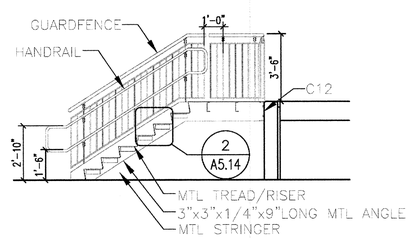

10 / – SECTION: PLATFORM EGRESS STAIR
1/4" = 1'-0"

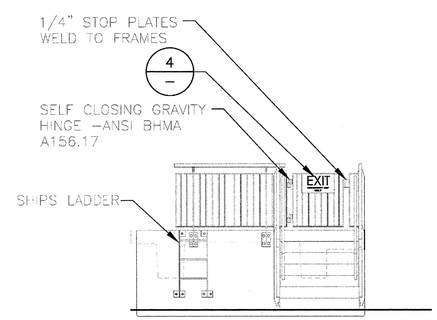

7 / – ELEVATION: PLATFORM EGRESS STAIR
1/4" = 1'-0"

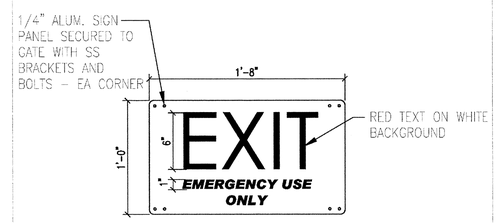

4 / – DETAIL: GATE EXIT SIGN
3" = 1'-0"

0 2" 4" 8"
SCALE: 1 1/2" = 1'-0"

0 1" 2" 4"
SCALE: 3" = 1'-0"

REGISTERED ARCHITECT
MICHAEL A. BASKIN
No. 4453
BOSTON MA
COMMONWEALTH OF MASSACHUSETTS

MASSACHUSETTS BAY TRANSPORTATION AUTHORITY

FITCHBURG COMMUTER RAIL LINE
IMPROVEMENT PROJECT
CONTRACT NO. G67PS01

SOUTH ACTON STATION
PLANS, ELEVATIONS
EGRESS STAIR AND WALK

ISSUE	DATE	DESCRIPTION	BY	CHKD.	APP.

HNTB
300 APOLLO DRIVE
CHELMSFORD, MA 01824
(978) 905-4000

PROJECT MANAGER 5/30/12 Date

MASSACHUSETTS BAY TRANSPORTATION AUTHORITY
APPROVED BY
PROJECT MANAGER 6/30/12 Date

Lozano, Baskin, and Associates, Inc.
Architecture•Urban Design•City Planning
205 Mt. Auburn St. Watertown, MA 02472

HORIZ: N/A
VERT: N/A
DATE: 05/17/12

DES. BY	DR. BY	CHK. BY
MB DW	DW	MB

PLAN NO. 168616
SHEET A-5.11
ISSUE

FILE NAME: C:\Documents and Settings\Mackintosh LBA\local settings\temp\AcPublish_544\ 04 A-DE0002.dwg
PLOT DATE: May 17, 2012 – 10:59am

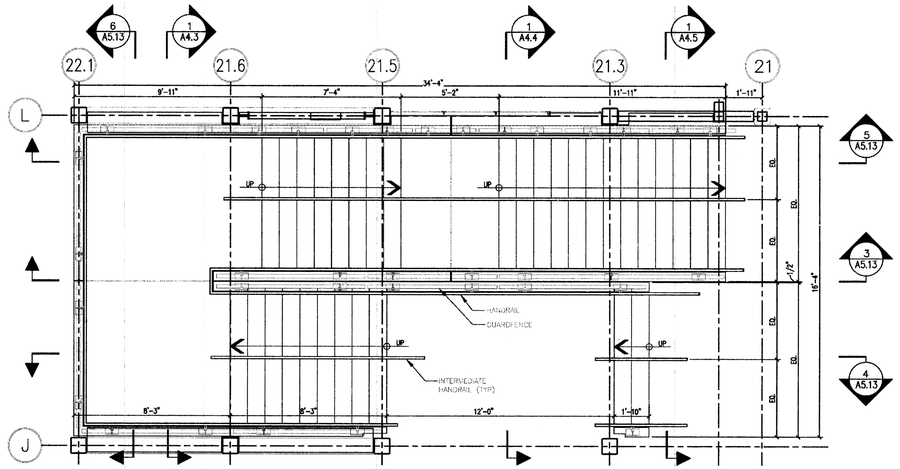

4 PLAN: OUTBOUND HEAD HOUSE STAIR
3" = 1'-0"

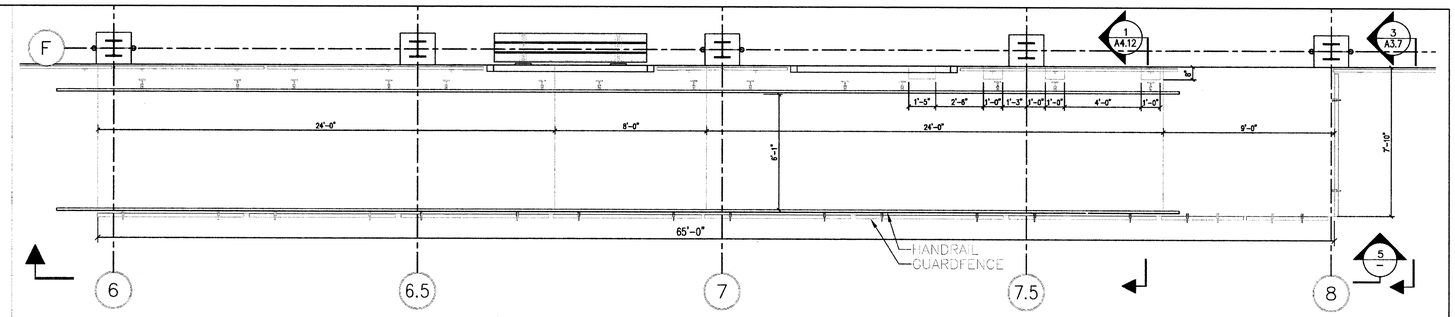

1 PLAN: OUTBOUND PLATFORM RAMP
1" = 1'-0"

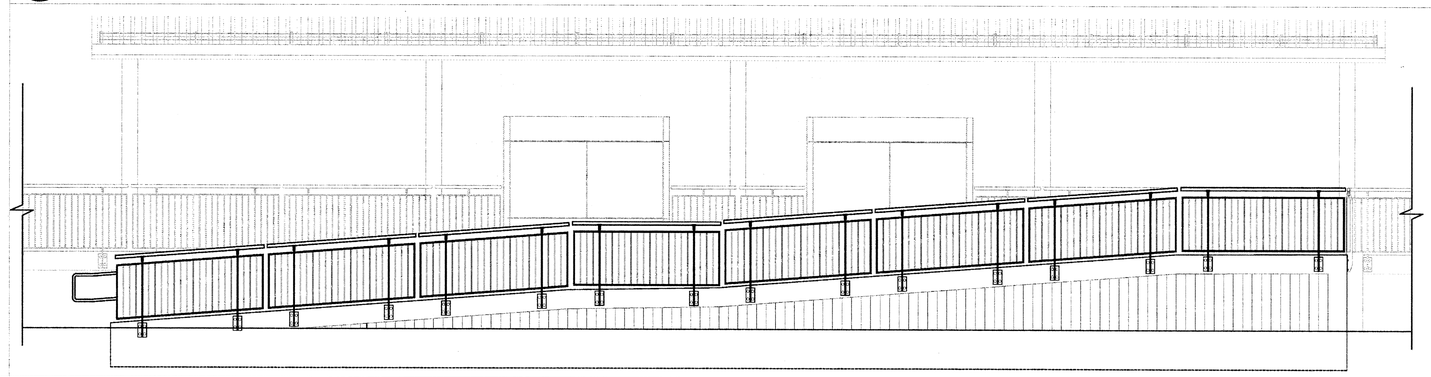

2 ELEVATION: OUTBOUND PLATFORM RAMP
3" = 1'-0"

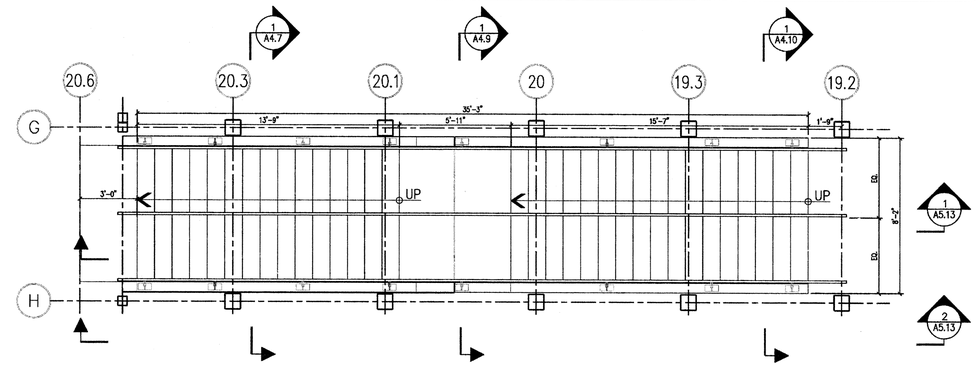

3 PLAN: INBOUND HEAD HOUSE STAIR
1" = 1'-0"

0 2" 4" 8"
SCALE: 1 1/2" = 1'-0"

0 1" 2" 4"
SCALE: 3" = 1'-0"

REGISTERED ARCHITECT
MICHAEL A. BROWN
No. 4453
BOSTON MA
COMMONWEALTH OF MASSACHUSETTS

MASSACHUSETTS BAY TRANSPORTATION AUTHORITY

FITCHBURG COMMUTER RAIL LINE
IMPROVEMENT PROJECT
CONTRACT NO. G67PS01

SOUTH ACTON STATION
PLANS, ELEVATIONS,SECTIONS
EGRESS STAIRS AND WALK

ISSUE	DATE	DESCRIPTION	BY	CHKD.	APP.

HNTB
300 APOLLO DRIVE
CHELMSFORD, MA 01824
(978) 905-4000

PROJECT MANAGER 5/30/12 Date

MASSACHUSETTS BAY TRANSPORTATION AUTHORITY
APPROVED BY:
PROJECT MANAGER 6/29/12 Date

Lozano, Baskin, and Associates, Inc.
Architecture•Urban Design•City Planning
205 Mt. Auburn St. Watertown, MA 02472

HORIZ: N/A	DES. BY	DR. BY	CHK. BY	PLAN NO. 168617	ISSUE
VERT: N/A	MB DW	DW	MB		
DATE: 05/17/12				SHEET A-5.12	

FILE NAME: C:\Documents and Settings\Mackintosh LBA\local settings\temp\AcPublish_544\ 04 A-DE0002.dwg
PLOT DATE: May 17, 2012 – 10:59am

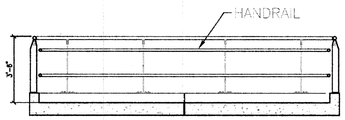

6 / A-5.12 SECTION: OUTBOUND LANDING
1" = 1'-0"

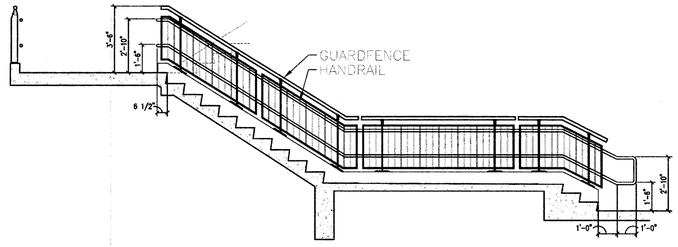

3 / - SECTION: OUTBOUND HEAD HOUSE STAIR
1" = 1'-0"

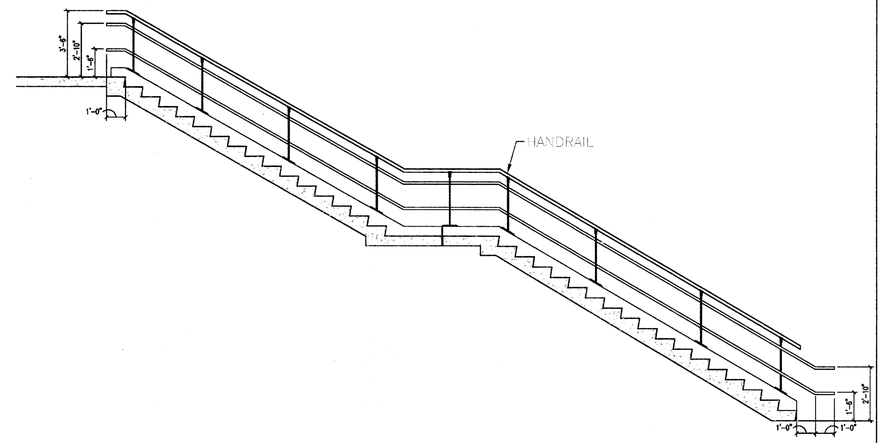

1 / - SECTION: INBOUND HEAD HOUSE STAIR
1/4" = 1'-0"

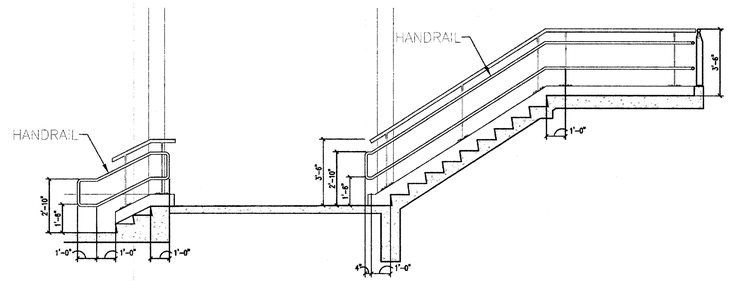

4 / A-5.12 SECTION: OUTBOUND HEAD HOUSE STAIR
3" = 1'-0"

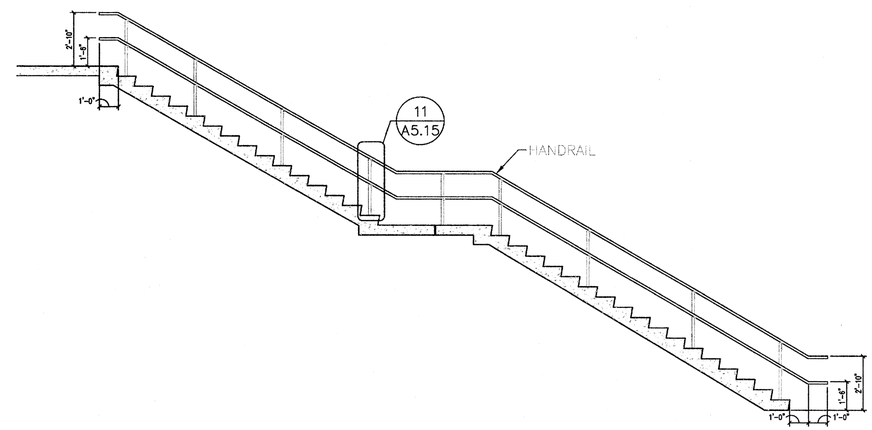

2 / - SECTION: INBOUND HEAD HOUSE STAIR
1/4" = 1'-0"

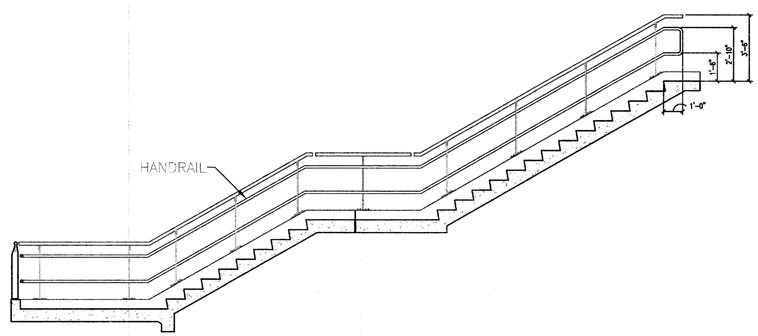

5 / A-5.12 PLAN: OUTBOUND HEAD HOUSE STAIR
1" = 1'-0"

0 2" 4" 8"
SCALE: 1 1/2" = 1'-0"

0 1" 2" 4"
SCALE: 3" = 1'-0"

REGISTERED ARCHITECT MICHAEL A. BIGNA No. 4453 BOSTON MA COMMONWEALTH OF MASSACHUSETTS

MASSACHUSETTS BAY TRANSPORTATION AUTHORITY

FITCHBURG COMMUTER RAIL LINE
IMPROVEMENT PROJECT
CONTRACT NO. G67PS01

SOUTH ACTON STATION
SECTIONS
EGRESS STAIRS AND WALK

ISSUE	DATE	DESCRIPTION	BY	CHKD.	APP.

HNTB
300 APOLLO DRIVE
CHELMSFORD, MA 01824
(978) 905-4000

PROJECT MANAGER 5/30/12 Date

MASSACHUSETTS BAY TRANSPORTATION AUTHORITY
APPROVED BY:
PROJECT MANAGER 6/13/12 Date

Lozano, Baskin, and Associates, Inc.
Architecture•Urban Design•City Planning
205 Mt. Auburn St. Watertown, MA 02472

HORIZ: N/A
VERT: N/A
DATE: 05/17/12

DES. BY	DR. BY	CHK. BY
MB DW	DW	MB

PLAN NO. 168618
SHEET A-5.13
ISSUE

FILE NAME: C:\Documents and Settings\Mackintosh LBA\local settings\temp\AcPublish_544\ 04 A-DE0002.dwg
PLOT DATE: May 17, 2012 - 11:00am

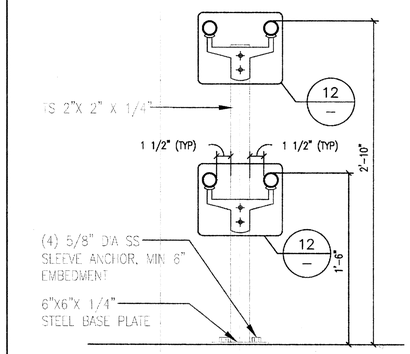

11 INTERMEDIATE HANDRAIL
1 1/2" = 1'-0"

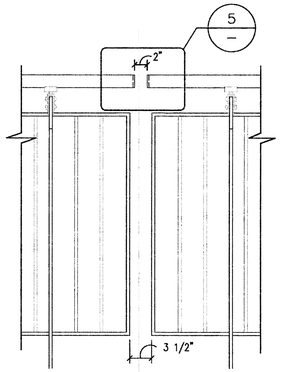

8 PIPE RAIL JOINT AT GUARD FENCE
1" = 1'-0"

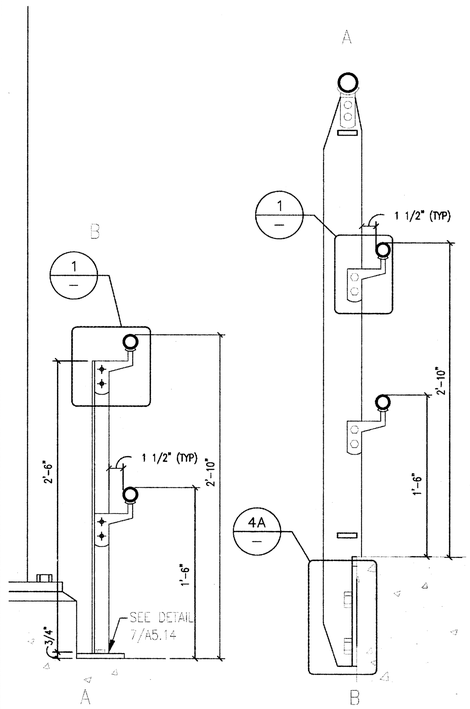

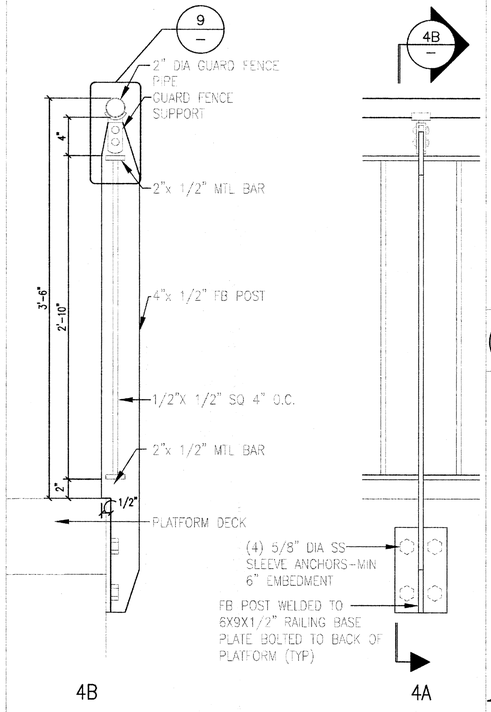

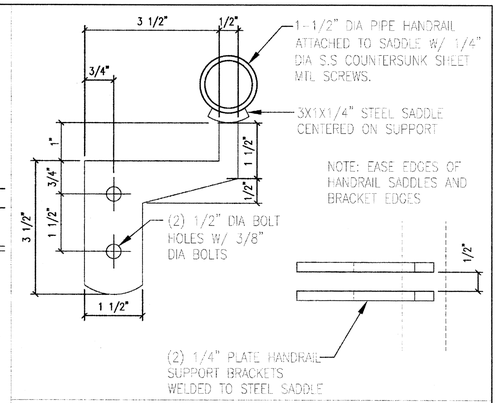

1 DETAIL: HANDRAIL
3" = 1'-0"

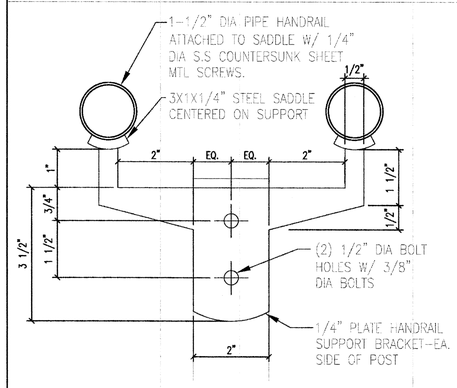

12 DETAIL: INTERMEDIATE HANDRAIL
3" = 1'-0"

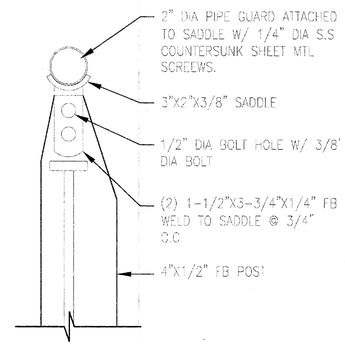

9 DETAIL: GUARD FENCE SUPPORT
3" = 1'-0"

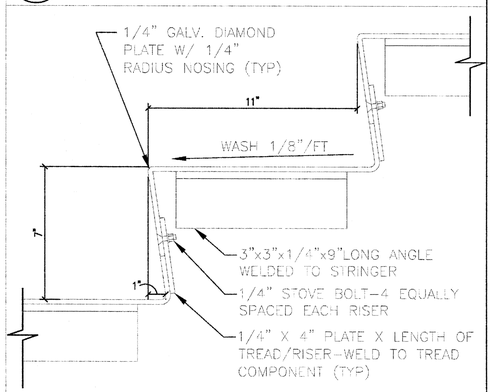

2 DETAIL: STAIR TREAD/RISER
3" = 1'-0"

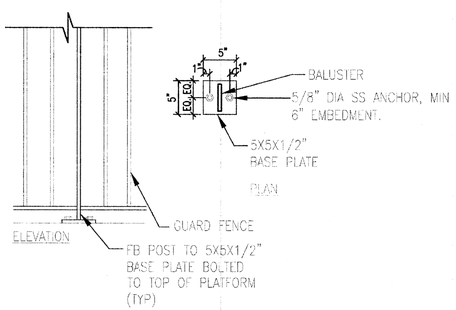

10 DETAIL: GUARD FENCE BASE PLATE
3" = 1'-0"

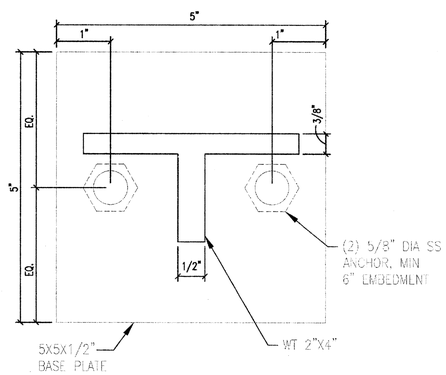

7 DETAIL: HANDRAIL SUPPORT
3" = 1'-0"

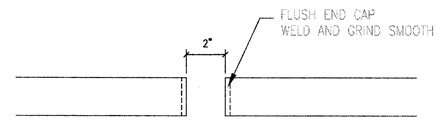

5 DETAIL: PIPE GUARD FENCE JOINT
3" = 1'-0"

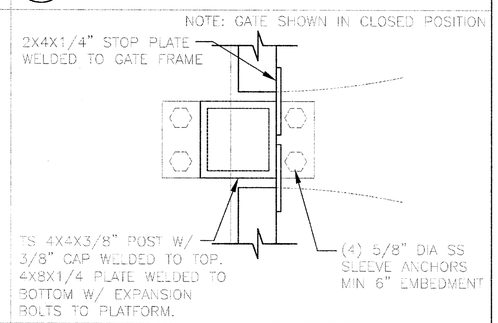

3 DETAIL: GATE STOP
3" = 1'-0"

SCALE: 1 1/2" = 1'-0"

SCALE: 3" = 1'-0"

REGISTERED ARCHITECT MICHEL A. BASKIN No. 4453 BOSTON MA COMMONWEALTH OF MASSACHUSETTS

MASSACHUSETTS BAY TRANSPORTATION AUTHORITY

FITCHBURG COMMUTER RAIL LINE
IMPROVEMENT PROJECT
CONTRACT NO. G67PS01

SOUTH ACTON STATION DETAILS–GUARD FENCE AND HANDRAILS

ISSUE	DATE	DESCRIPTION	BY	CHKD.	APP.

HNTB
300 APOLLO DRIVE
CHELMSFORD, MA 01824
(978) 905-4000

PROJECT MANAGER 5/30/12 Date

MASSACHUSETTS BAY TRANSPORTATION AUTHORITY
APPROVED BY:
PROJECT MANAGER 6/30/12 Date

Lozano, Baskin, and Associates, Inc.
Architecture•Urban Design•City Planning
205 Mt. Auburn St. Watertown, MA 02472

HORIZ: N/A	DES. BY	DR. BY	CHK. BY
VERT: N/A	MB DW	DW	MB
DATE: 05/17/12			

PLAN NO. 168619
SHEET A-5.14
ISSUE

FILE NAME: C:\Documents and Settings\Mackintosh LBA\local settings\temp\AcPublish_544\ 04 A-DE0002.dwg
PLOT DATE: May 17, 2012 – 11:00am

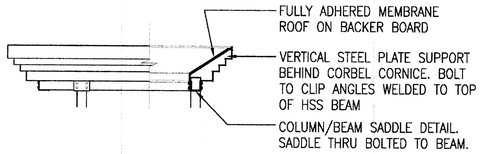

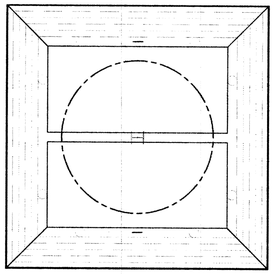

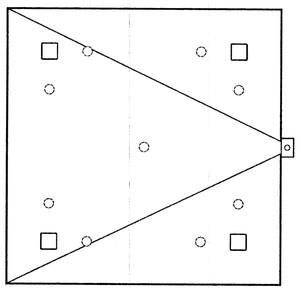

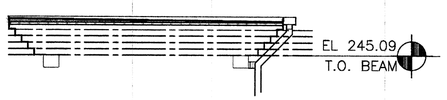

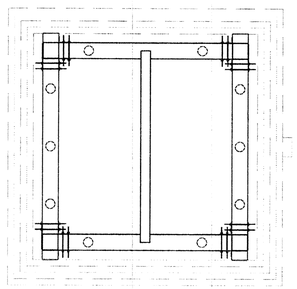

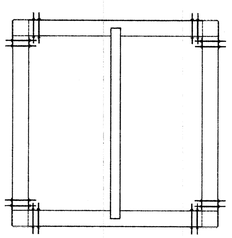

8 PLANS: CAMPANILE
1/4" = 1'-0"

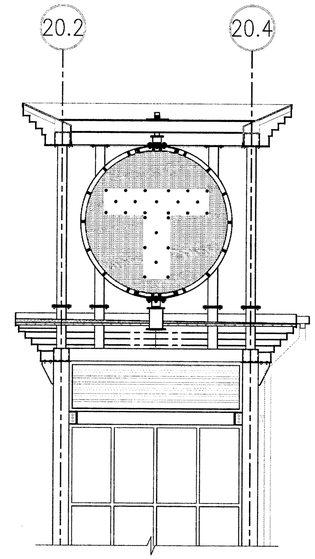

3 PARTIAL SECTION
1/4" = 1'-0"

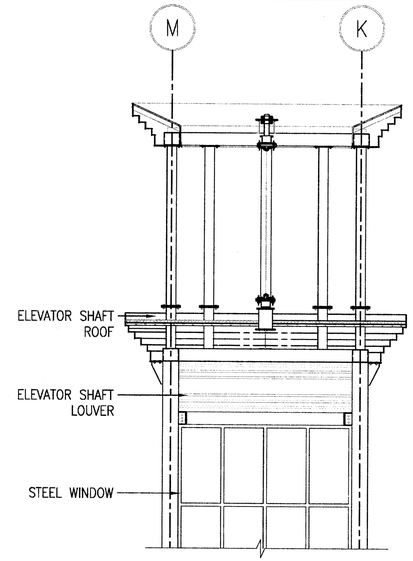

2 PARTIAL SECTION
1/4" = 1'-0"

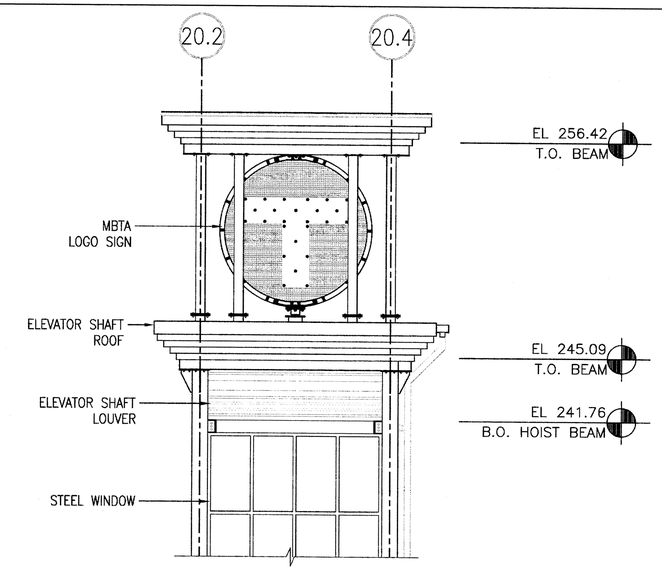

1 PARTIAL ELEVATION: NORTH
1/4" = 1'-0"

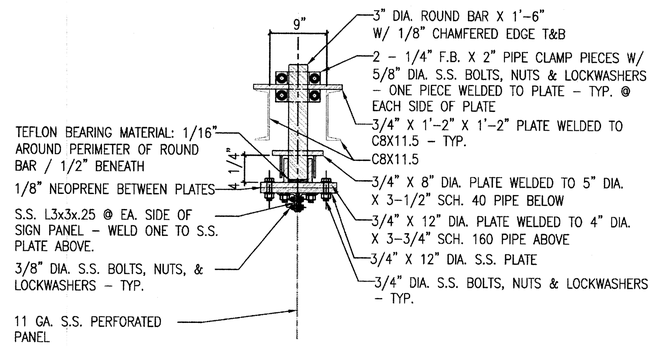

6 SECTION: MBTA LOGO SIGN
1/2" = 1'-0"

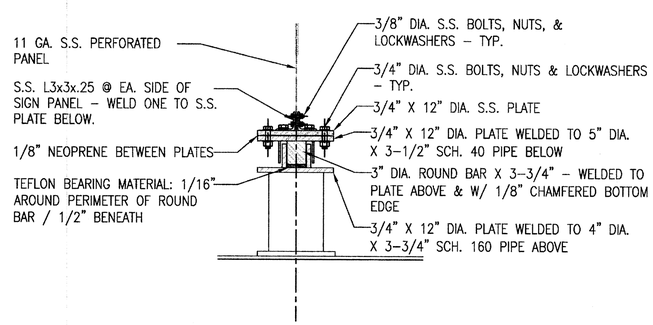

7 SECTION: MBTA LOGO SIGN
1/2" = 1'-0"

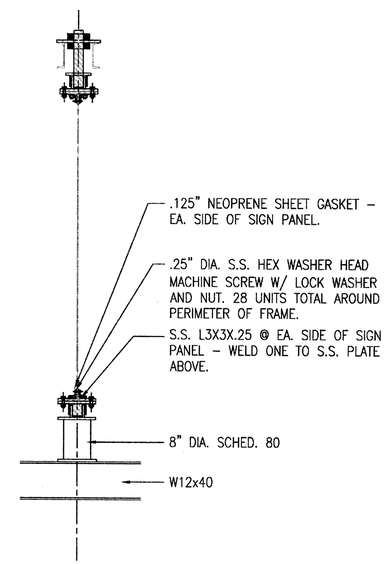

5 SECTION: MBTA LOGO SIGN
1/2" = 1'-0"

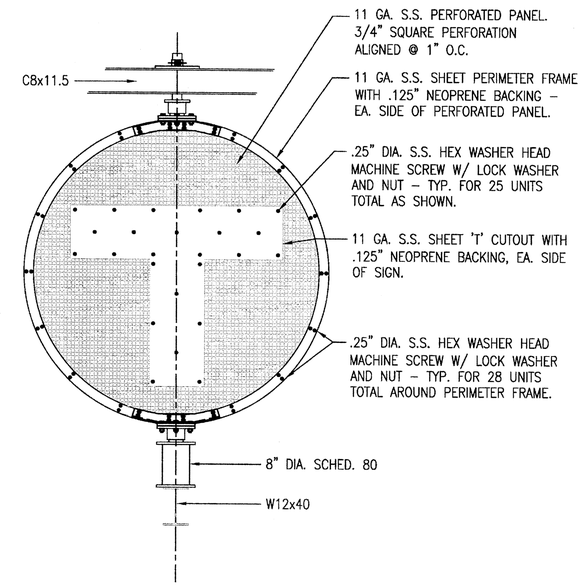

4 DETAIL: MBTA LOGO SIGN
1/2" = 1'-0"

0 2" 4" 8"
SCALE: 1 1/2" = 1'-0"

0 1" 2" 4"
SCALE: 3" = 1'-0"

REGISTERED ARCHITECT MICHAEL A. BOSIAN No. 6453 BOSTON MA COMMONWEALTH OF MASSACHUSETTS

MASSACHUSETTS BAY TRANSPORTATION AUTHORITY

FITCHBURG COMMUTER RAIL LINE
IMPROVEMENT PROJECT
CONTRACT NO. G67PS01

SOUTH ACTON STATION
DETAILS
CAMPANILE

ISSUE	DATE	DESCRIPTION	BY	CHKD.	APP.

HNTB
300 APOLLO DRIVE
CHELMSFORD, MA 01824
(978) 905-4000
PROJECT MANAGER Date

MASSACHUSETTS BAY TRANSPORTATION AUTHORITY
APPROVED BY:
PROJECT MANAGER Date 6/30/12

Lozano, Baskin, and Associates, Inc.
Architecture•Urban Design•City Planning
205 Mt. Auburn St. Watertown, MA 02472

HORIZ: N/A	DES. BY	DR. BY	CHK. BY	PLAN NO. 168620
VERT: N/A	MB DW	DW	MB	ISSUE
DATE: 05/17/12				SHEET A-5.15

FILE NAME: C:\Documents and Settings\Mackintosh LBA\local settings\temp\AcPublish_544\ 04 A-DE0002.dwg
PLOT DATE: May 17, 2012 – 11:00am

SIGN/BENCH SCHEDULE

XX SIGN #	QTY.	GRAPHIC NORTH/ EAST	GRAPHIC SOUTH/ WEST	FRAME TYPE	MOUNTING DETAIL	BASE PLATE DETAIL	REMARKS
01	1	GRAPHIC 01	19	TYPE A	FACE MOUNT	1/A6.3	ID BAND @ NORTH HEAD HOUSE ENTRY
02	1	GRAPHIC 02	02 O.H	TYPE A1	SUSPEND	4/A6.3	ID BAND @ ELEVATOR TO BRIDGE
03	1	GRAPHIC 17	13	TYPE A	FACE MOUNT	1/A6.3	ID BAND @ RAMP LANDING
04	1	GRAPHIC 04	10	TYPE C	FOOTING	3A–C/A6.7	2 BAY SIGN W/BRAILLE SCHEDULE CASE/MAP
05	3	GRAPHIC 08*	05*	TYPE D	BACK OF PLATFORM	3A–D/A6.7	2 BAY BENCH W/ WINDSCREEN – INBOUND
06	1	GRAPHIC 08*	10*	TYPE E	FOOTING	3A–A/A6.7	2 BAY BENCH W/ WINDSCREEN – INBOUND
07	1	GRAPHIC 17	06	TYPE A	FACE MOUNT	1/A6.3	EXTENDED ID BAND @ STAIR LANDING
08	1	GRAPHIC 07	18	TYPE A	FACE MOUNT	1/A6.3	ID BAND @ INBOUND HH ELEVATOR ENTRY
09	1	GRAPHIC 05	05	TYPE E	FOOTING	3A–C/A6.7	2 BAY BENCH W/ WINDSCREEN
10	2	GRAPHIC 08*	05*	TYPE B	BACK OF PLATFORM	3A–D/A6.7	2 BAY SIGN W/ WINDSCREEN INBOUND
11	1	GRAPHIC 11	18	TYPE A	FACE MOUNT	1/A6.3	ID BAND @ HH INBOUND STAIR ENTRY
12	1	GRAPHIC 03	12	TYPE A1	SUSPEND	4/A6.3	ID BAND @ HH OUTBOUND STAIR ENTRY
13	2	VMS	VMS	TYPE G	FOOTING	3A–A/A6.7	VARIABLE MESSAGE SIGN
14	3	GRAPHIC 05	14	TYPE B	BACK OF PLATFORM	3A–D/A6.7	2 BAY SIGN W/ WINDSCREEN OUTBOUND
15	3	GRAPHIC 05*	14*	TYPE D	BACK OF PLATFORM	3A–D/A6.7	2 BAY BENCH W/ WINDSCREEN – OUTBOUND
16	1	GRAPHIC 10*	14*	TYPE E	FOOTING	3A–A/A6.7	2 BAY BENCH W/ WINDSCREEN – OUTBOUND
17	1	GRAPHIC 09	05	TYPE B	BACK OF PLATFORM	3A–D/A6.7	2 BAY SIGN W/ BRAILLE SIGN & MAP–INBOUND
18	1	GRAPHIC 09	10	TYPE C	FOOTING	3A–C/A6.7	2 BAY SIGN W/ BRAILLE SIGN & MAP–INBOUND
19	1	GRAPHIC 05	15	TYPE B	BACK OF PLATFORM	3A–D/A6.7	2 BAY SIGN W/ BRAILLE SIGN & MAP–OUTBOUND
20	1	GRAPHIC 10	15	TYPE C	FOOTING	3A–C/A6.7	2 BAY SIGN W/ BRAILLE SIGN & MAP–OUTBOUND
21	1	GRAPHIC 04A	10	TYPE C	FOOTING	3A–C/A6.7	2 BAY SIGN W/ BRAILLE/SCHEDULE CASE/MAP
22	1	GRAPHIC 08**	05	TYPE B	BACK OF PLATFORM	3A–D/A6.7	2 BAY SIGN W/ GRAPHIC PANELS
23	1	GRAPHIC 05**	14**	TYPE B	BACK OF PLATFORM	3A–D/A6.7	2 BAY SIGN W/ GRAPHIC PANELS
24	1	GRAPHIC 10	04A	TYPE C	FOOTING	3A–C/A6.7	2 BAY SIGN W/ BRAILLE/SCHEDULE CASE/MAP
25	1	GRAPHIC 19	22	TYPE A1	SUSPEND	4/A6.3	ID BAND @ HH OUTBOUND STAIR UPPER LEVEL
26	1	GRAPHIC 21	19	TYPE A1	SUSPEND	4/A6.3	ID BAND @ HH INBOUND STAIR UPPER LEVEL
40	01	GRAPHIC M/11	–	–	ANCHOR	5/A–4.8	ACCESSIBLE PARKING VAN ACCESSIBLE
41	05	GRAPHIC Q/11	–	–	ANCHOR	5/A–4.8	ACCESSIBLE PARKING
55	2	–	–	TYPE H	FOOTING	3A–A/A6.7	BENCHES @ BRIDGE (NO SIGN/WINDSCREEN)
60	4	GRAPHIC 20/S	–	–	POST MOUNTED	11/A6.8	ALUMINUM SIGN; DANGER WILL NOT CLEAR MAN
61	4	GRAPHIC 20/T	–	–	WALL MOUNTED		ALUMINUM SIGN; ELEVATOR
62	1	GRAPHIC 20/T	–	–	POST MOUNTED	11/A6.8	ALUMINUM SIGN; NO ACCESS
63	1	GRAPHIC 20/	–	–	GATE MOUNTED		ALUMINUM SIGN; EXIT AT EGRESS

* 4'x4' PERFORATED STAINLESS STEEL PANELS USED AT THIS LOCATION

* 4'x4' PERFORATED STAINLESS STEEL PANELS USED AT THIS LOCATION

* 4'x4' PERFORATED STAINLESS STEEL PANELS USED AT THIS LOCATION

* 4'x4' PERFORATED STAINLESS STEEL PANELS USED AT THIS LOCATION

* 4'x4' PERFORATED STAINLESS STEEL PANELS USED AT THIS LOCATION

** 4'x4' GRAPHIC PANEL

** 4'x4' GRAPHIC PANEL

NOTE:

1. REFER TO PLAN SHEETS [A–1.1 – A–1.12] FOR SIGN LOCATIONS EXCEPT AS NOTED OTHERWISE.
2. REFER TO SHEET A–6.2 FOR SIGN GRAPHICS.
3. REFER TO SHEETS [A–6.3 – A–6.–] FOR FRAME TYPES AND DETAILS.
4. FIBERGLASS PANELS WITHOUT GRAPHIC CONTENT SHALL BE BLANK WHITE (TYP.)
5. TEXT MUST BE HELVETICA NEUE BOLD 6" WHITE LETTERING ON PURPLE BAND AND 3" BLACK TEXT IN WAYFINDING BAND.
6. SYMBOL SIZES WITHIN A 6" BAND:
   - ARROW WITH CIRCLE: 5" IN HEIGHT
   - ELEVATOR SYMBOL: 5" IN HEIGHT
   - ISA SYMBOL: $5\frac{1}{4}$" IN HEIGHT
   - PARKING SYMBOL: 5" IN HEIGHT
7. GRAPHIC PANELS – FULL COLOR GRAPHIC CONTENT WILL BE PROVIDED BY MBTA IN ELECTRONIC DATA FILES

REGISTERED ARCHITECT MICHAEL A. BASKIN No.4453 BOSTON MA COMMONWEALTH OF MASSACHUSETTS

MASSACHUSETTS BAY TRANSPORTATION AUTHORITY

FITCHBURG COMMUTER RAIL LINE IMPROVEMENT PROJECT CONTRACT NO. G67PS01

SOUTH ACTON STATION SIGN SCHEDULE

ISSUE	DATE	DESCRIPTION	BY	CHKD.	APP.

HNTB 300 APOLLO DRIVE CHELMSFORD, MA 01824 (978) 905–4000

PROJECT MANAGER 5/18/12 Date

MASSACHUSETTS BAY TRANSPORTATION AUTHORITY

APPROVED BY: PROJECT MANAGER 6/30/12 Date

Lozano, Baskin, and Associates, Inc.
Architecture•Urban Design•City Planning
205 Mt. Auburn St. Watertown, MA 02472

HORIZ: N/A	DES. BY	DR. BY	CHK. BY	PLAN NO. 168621	ISSUE
VERT: N/A	MB DW	DW	MB		
DATE: 05/17/12				SHEET A–6.1	

FILE NAME: Z:\Active Projects\0814 Fitchburg Main Line\0814.01 So. Acton\7.0 Design Development\7.4 100% Submission\ 05 A-SN0001.dwg
PLOT DATE: May 17, 2012 – 2:39pm

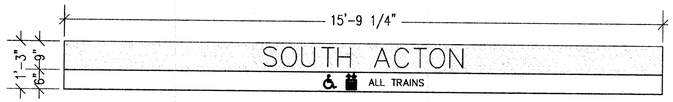

1 GRAPHIC 01
SCALE : 1/2" = 1'-0"

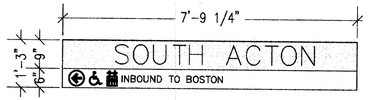

2 GRAPHIC 02
SCALE : 1/2" = 1'-0"

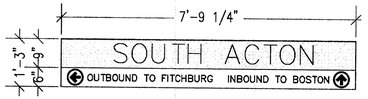

3 GRAPHIC 03
SCALE : 1/2" = 1'-0"

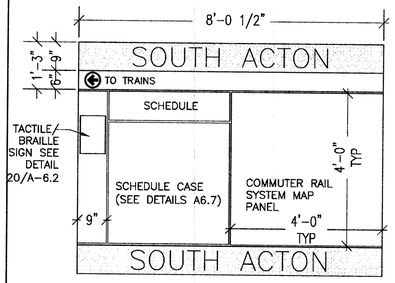

4 GRAPHIC 04
SCALE : 1/2" = 1'-0"

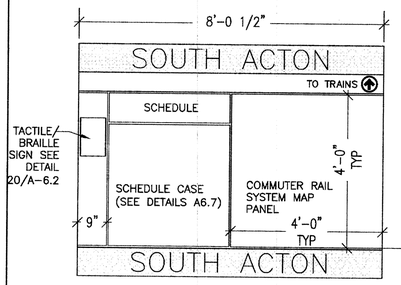

4A GRAPHIC 04A
SCALE : 1/2" = 1'-0"

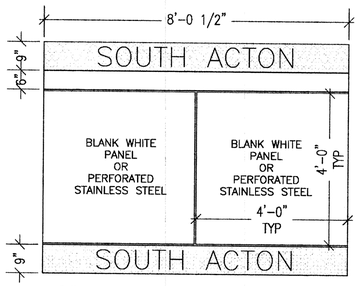

5 GRAPHIC 05
SCALE : 1/2" = 1'-0"

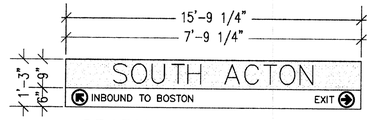

6 GRAPHIC 06
SCALE : 1/2" = 1'-0"

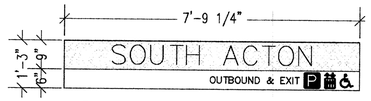

7 GRAPHIC 07
SCALE : 1/2" = 1'-0"

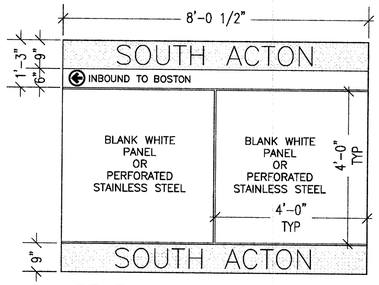

8 GRAPHIC 08
SCALE : 1/2" = 1'-0"

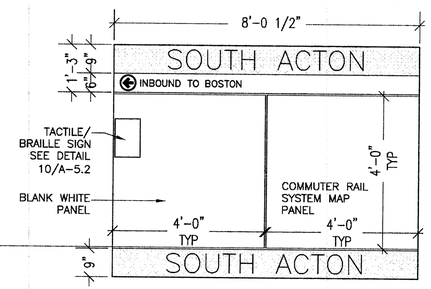

9 GRAPH 09
SCALE : 1/2" = 1'-0"

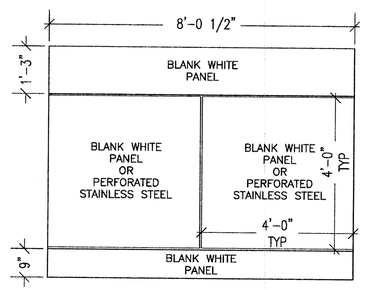

10 GRAPH 10
SCALE : 1/2" = 1'-0"

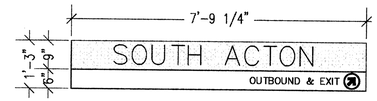

11 GRAPHIC 11
SCALE : 1/2" = 1'-0"

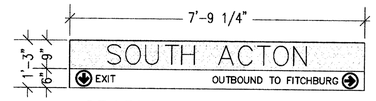

12 GRAPHIC 12
SCALE : 1/2" = 1'-0"

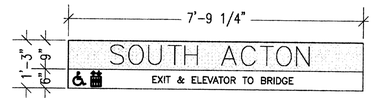

13 GRAPHIC 13
SCALE : 1/2" = 1'-0"

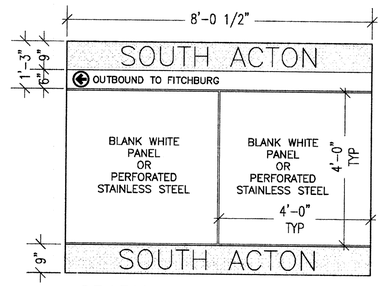

14 GRAPHIC 14
SCALE : 1/2" = 1'-0"

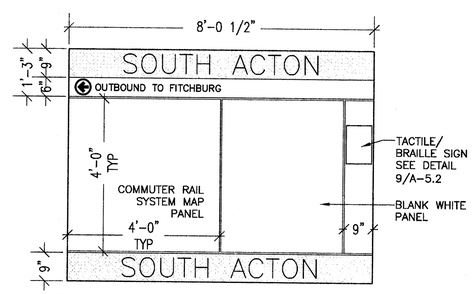

15 GRAPH 15
SCALE : 1/2" = 1'-0"

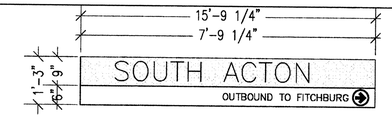

17 GRAPHIC 17
SCALE : 1/2" = 1'-0"

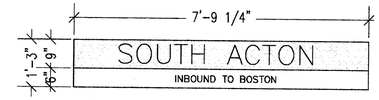

18 GRAPHIC 18
SCALE : 1/2" = 1'-0"

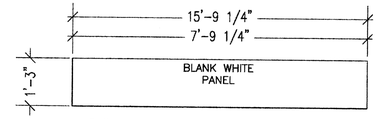

19 GRAPHIC 19
SCALE : 1/2" = 1'-0"

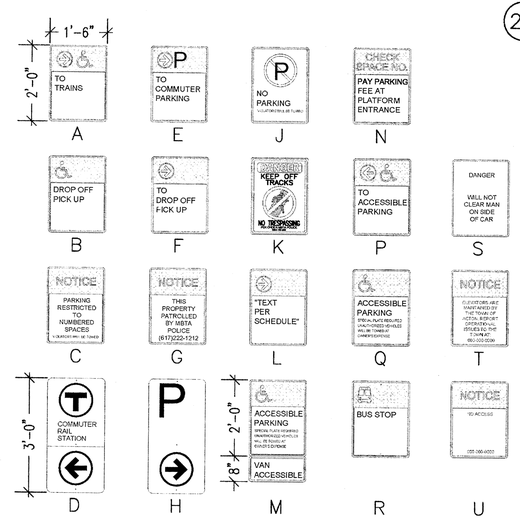

20 TRAFFIC SIGNS
SCALE : 1/2" = 1'-0"

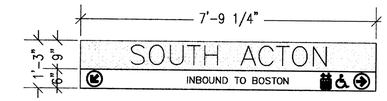

21 GRAPHIC 21
SCALE : 1/2" = 1'-0"

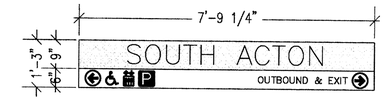

22 GRAPHIC 22
SCALE : 1/2" = 1'-0"

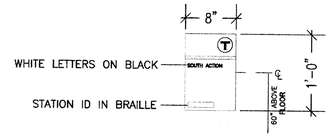

23 TACTILE/BRAILLE SIGN
SCALE : 1" = 1'-0"

NOTES:

1. WALL MOUNTED SIGNS TO BE SECURED WITH (4) 1/4" EXPANSION BOLTS, (1) AT EACH CORNER.

"T" LOGO PROPORTIONS FOR DIAMETER LARGER THAN 4"
NTS

NOTES:

1. ALL TEXT TO BE IN MBTA STANDARD, HELVETICA MEDIUM.
2. ALL TACTILE/BRAILLE LETTERING SHALL BE MINIMUM 5/8" HIGH.
3. TACTILE/BRAILLE SIGNS SHALL BE MOUNTED CENTERLINE OF SIGN 60" ABOVE PLATFORM/ SIDEWALK SURFACE.
4. GRAPHICS SHOWN ARE FOR CONTENT ONLY. REFER TO CURRENT MBTA GRAPHIC STANDARDS FOR COMPLETE DESIGN GUIDELINES.
5. REFER TO SCHEDULE FOR SIGN MOUNTING AND FRAMING DETAILS.

COLOR KEY:

- MBTA STANDARD COMMUTER RAIL PURPLE COLOR W/ WHITE LETTERS
- MBTA APPROVED WHITE W/ BLACK LETTERS

REGISTERED ARCHITECT MICHAEL A. BASKIN No. 4453 BOSTON MA COMMONWEALTH OF MASSACHUSETTS

MASSACHUSETTS BAY TRANSPORTATION AUTHORITY

FITCHBURG COMMUTER RAIL LINE
IMPROVEMENT PROJECT
CONTRACT NO. G67PS01

SOUTH ACTON STATION
SIGN GRAPHICS

ISSUE	DATE	DESCRIPTION	BY	CHKD.	APP.

HNTB
300 APOLLO DRIVE
CHELMSFORD, MA 01824
(978) 905-4000

PROJECT MANAGER 5/30/12 Date

MASSACHUSETTS BAY TRANSPORTATION AUTHORITY
APPROVED BY:
PROJECT MANAGER 6/30/12 Date

Lozano, Baskin, and Associates, Inc.
Architecture • Urban Design • City Planning
205 Mt. Auburn St. Watertown, MA 02472

HORIZ: N/A	DES. BY MB	DR. BY DW	CHK. BY MB	PLAN NO. 168622
VERT: N/A				SHEET A-6.2
DATE: 05/17/12				ISSUE

FILE NAME: Z:\Active Projects\0814 Fitchburg Main Line\0814.01 So. Acton\7.0 Design Development\7.4 100% Submission\ 05 A-SN0001.dwg
PLOT DATE: May 17, 2012 - 2:39pm

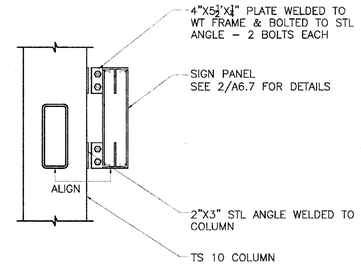

3 / – SECTION SIGN: TYPE A
SCALE: 1"=1'-0"

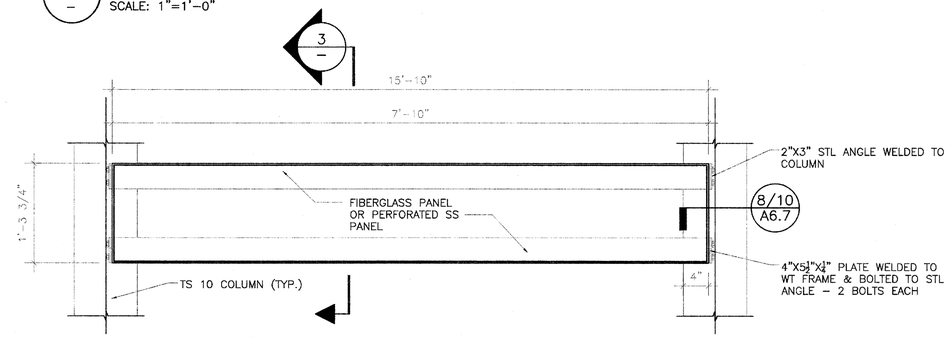

2 / – ELEVATION SIGN: TYPE A
SCALE: 1"=1'-0"

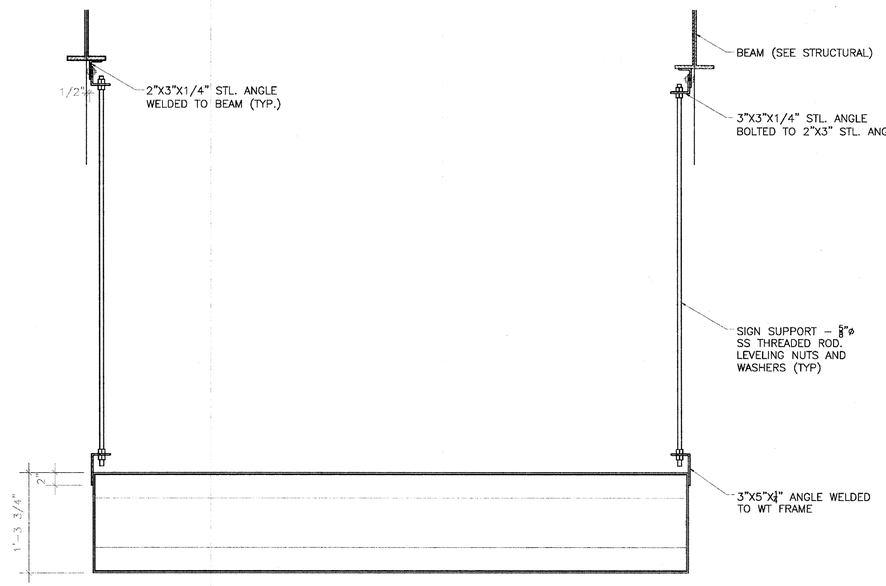

4 / – ELEVATION SIGN: TYPE A1
SCALE: 1"=1'-0"

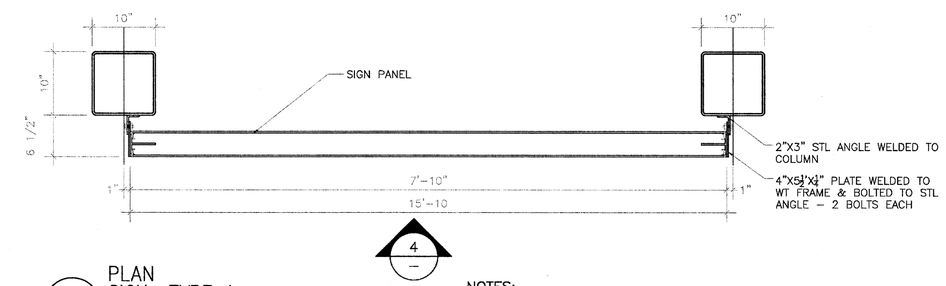

1 / – PLAN SIGN: TYPE A
SCALE: 1"=1'-0"

NOTES:
- FRAME TYPE A LENGTH VARIES. REFER TO APPROPRIATE GRAPHIC ON SHEET A6.2.
- ANGLES ATTACHED TO STRUCTURAL STEEL FOR SUSPENDED SIGNS SHALL BE WELDED TO STRUCTURAL STEEL PRIOR TO GALVANIZING AND SHOP PAINTING.
- UNLESS SPECIFIED OTHERWISE, ALL BOLTS ARE ⅝" MIN

NOTES:
1. SEE STRUCTURAL DWGS FOR ANCHOR BOLT AND FND FOOTING DETAILS. AND BASE/ANCHOR PLATES (TYP.)
2. FIBERGLASS PANELS AT EACH SIDE TYPICAL UNLESS OTHERWISE NOTED.
3. REFER TO INDIVIDUAL STATION DP FOR FIBERGLASS PANEL GRAPHIC CONTENT.
4. ALL TUBE CONNECTIONS SHALL BE BEVEL WELDS GROUND SMOOTH PRIOR TO GALVANIZING (UNO).
5. ALL WELDS FOR NON-TUBE SECTION CONNECTIONS SHALL BE FILLET WELDS PRIOR TO GALVANIZING (UNO).

0 1/2' 1' 2'
SCALE: 1" = 1'-0"

REGISTERED ARCHITECT MICHEL A. BROWN No.4453 BOSTON MA COMMONWEALTH OF MASSACHUSETTS

MASSACHUSETTS BAY TRANSPORTATION AUTHORITY

FITCHBURG COMMUTER RAIL LINE
IMPROVEMENT PROJECT
CONTRACT NO. G67PS01

SOUTH ACTON STATION SIGN DETAILS OVERHEAD SIGNS

ISSUE	DATE	DESCRIPTION	BY	CHKD.	APP.

HNTB
300 APOLLO DRIVE
CHELMSFORD, MA 01824
(978) 905-4000
PROJECT MANAGER 6/30/12 Date

MASSACHUSETTS BAY TRANSPORTATION AUTHORITY
APPROVED BY: PROJECT MANAGER 6/30/12 Date

Lozano, Baskin, and Associates, Inc.
Architecture•Urban Design•City Planning
205 Mt. Auburn St. Watertown, MA 02472

HORIZ: N/A
VERT: N/A
DATE: 05/17/12

DES. BY	DR. BY	CHK. BY
MB DW	DW	MB

PLAN NO. 168623
SHEET A-6.3
ISSUE

FILE NAME: C:\Documents and Settings\Mackintosh LBA\local settings\temp\AcPublish_3664\ 05 A-SN0002.dwg
PLOT DATE: May 17, 2012 – 2:39pm

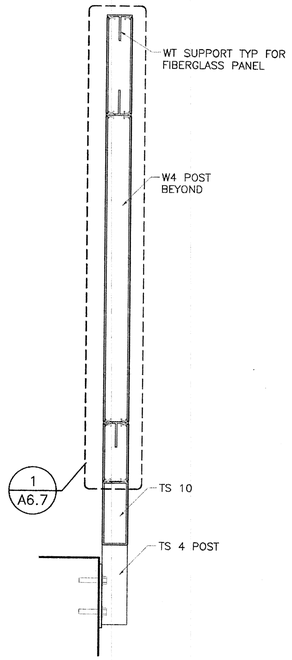

6 SECTION
2 BAY SIGN: TYPE B
SCALE: 1"=1'-0"

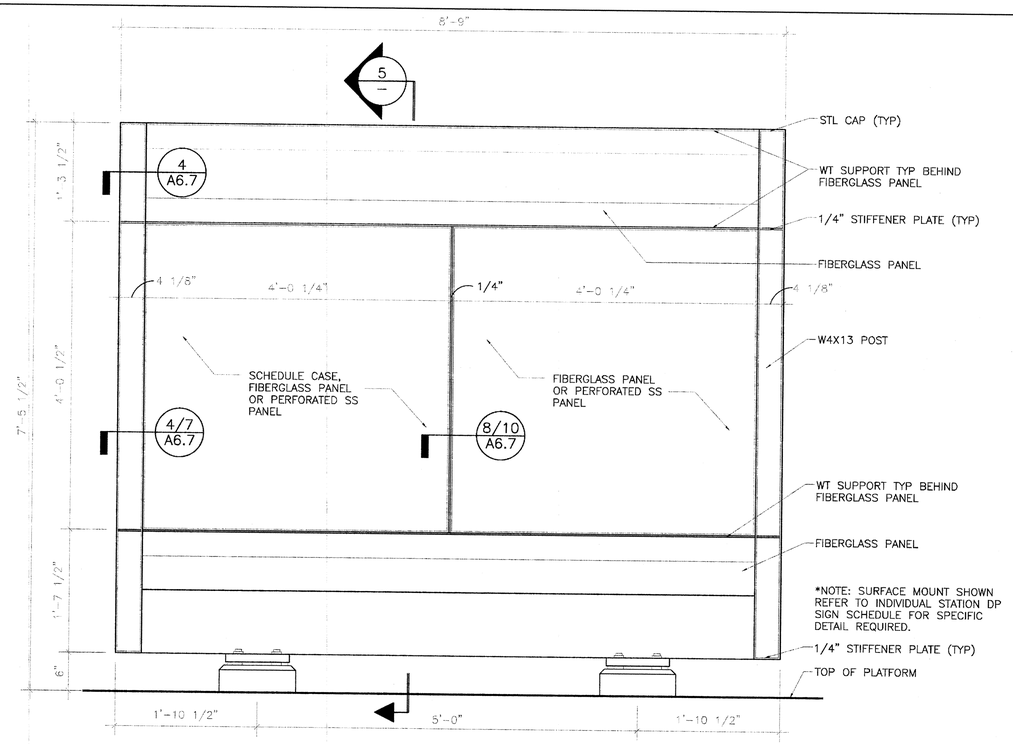

4 PLAN
2 BAY SIGN: TYPE C
SCALE: 1"=1'-0"

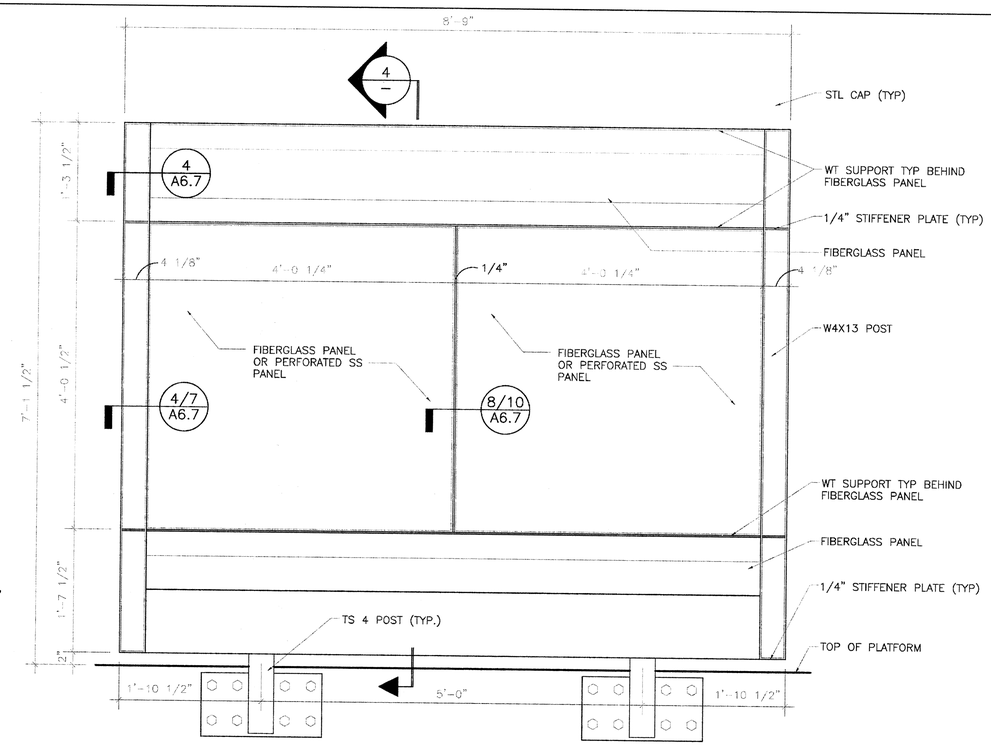

2 ELEVATION
2 BAY SIGN: TYPE B
SCALE: 1"=1'-0"

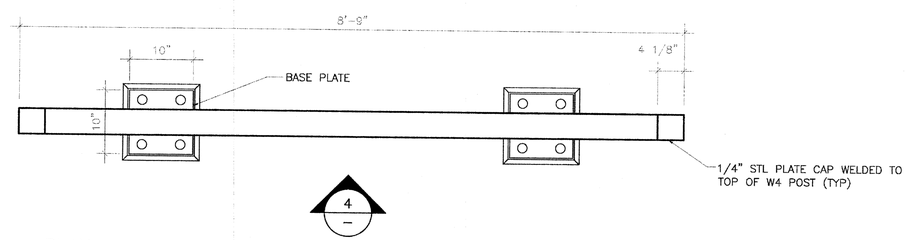

3 PLAN
2 BAY SIGN: TYPE C
SCALE: 1"=1'-0"

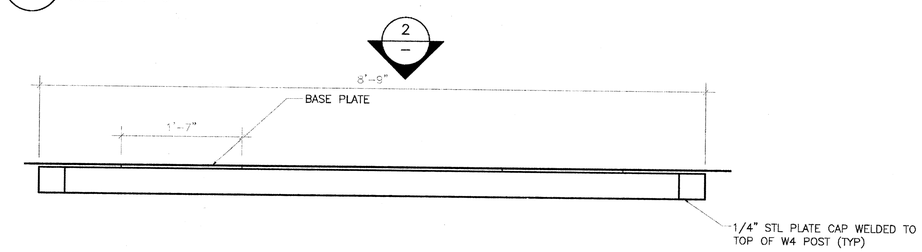

1 PLAN
2 BAY SIGN: TYPE B
SCALE: 1"=1'-0"

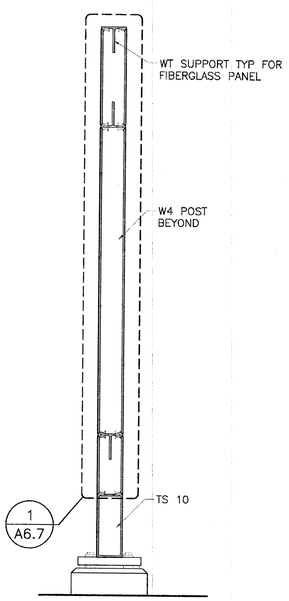

5 SECTION
2 BAY SIGN: TYPE C
SCALE: 1"=1'-0"

NOTES:
1. SEE STRUCTURAL DWGS FOR ANCHOR BOLT AND FND FOOTING DETAILS. AND BASE/ANCHOR PLATES (TYP.)
2. FIBERGLASS PANELS AT EACH SIDE TYPICAL UNLESS OTHERWISE NOTED.
3. REFER TO INDIVIDUAL STATION DP FOR FIBERGLASS PANEL GRAPHIC CONTENT.
4. ALL TUBE CONNECTIONS SHALL BE BEVEL WELDS GROUND SMOOTH PRIOR TO GALVANIZING (UNO).
5. ALL WELDS FOR NON-TUBE SECTION CONNECTIONS SHALL BE FILLET WELDS PRIOR TO GALVANIZING (UNO).

0 1/2' 1' 2'
SCALE: 1" = 1'-0"

REGISTERED ARCHITECT MICHAEL A. BASKIN No.4453 BOSTON MA COMMONWEALTH OF MASSACHUSETTS

MASSACHUSETTS BAY TRANSPORTATION AUTHORITY
FITCHBURG COMMUTER RAIL LINE
IMPROVEMENT PROJECT
CONTRACT NO. G67PS01

SOUTH ACTON STATION
SIGN DETAILS
TYPE B & C

ISSUE	DATE	DESCRIPTION	BY	CHK'D.	APP.

HNTB 300 APOLLO DRIVE CHELMSFORD, MA 01824 (978) 905-4000
PROJECT MANAGER 5/30/12 Date

MASSACHUSETTS BAY TRANSPORTATION AUTHORITY
APPROVED BY: 6/30/12
PROJECT MANAGER Date

Lozano, Baskin, and Associates, Inc.
Architecture•Urban Design•City Planning
205 Mt. Auburn St. Watertown, MA 02472

HORIZ: N/A
VERT: N/A
DATE: 05/17/12

DES. BY	DR. BY	CHK. BY
MB DW	DW	MB

PLAN NO. 168624
SHEET A-6.4
ISSUE

FILE NAME: C:\Documents and Settings\Mackintosh LBA\local settings\temp\AcPublish_3664\ 05 A-SN0002.dwg
PLOT DATE: May 17, 2012 - 2:39pm

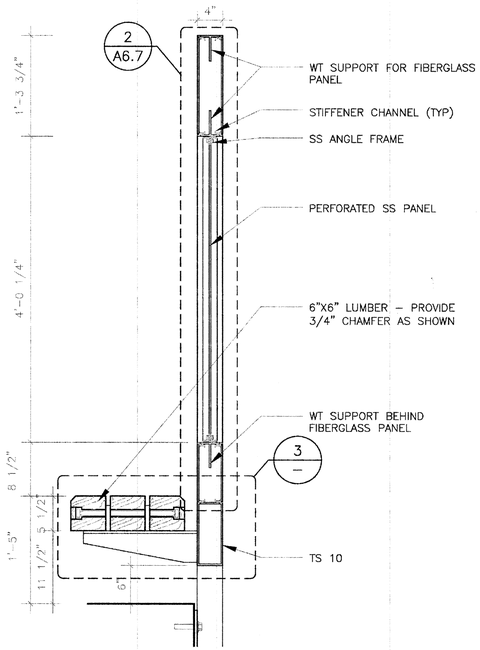

5 – SECTION
2 BAY–SINGLE BENCH: TYPE D
SCALE: 1"=1'-0"

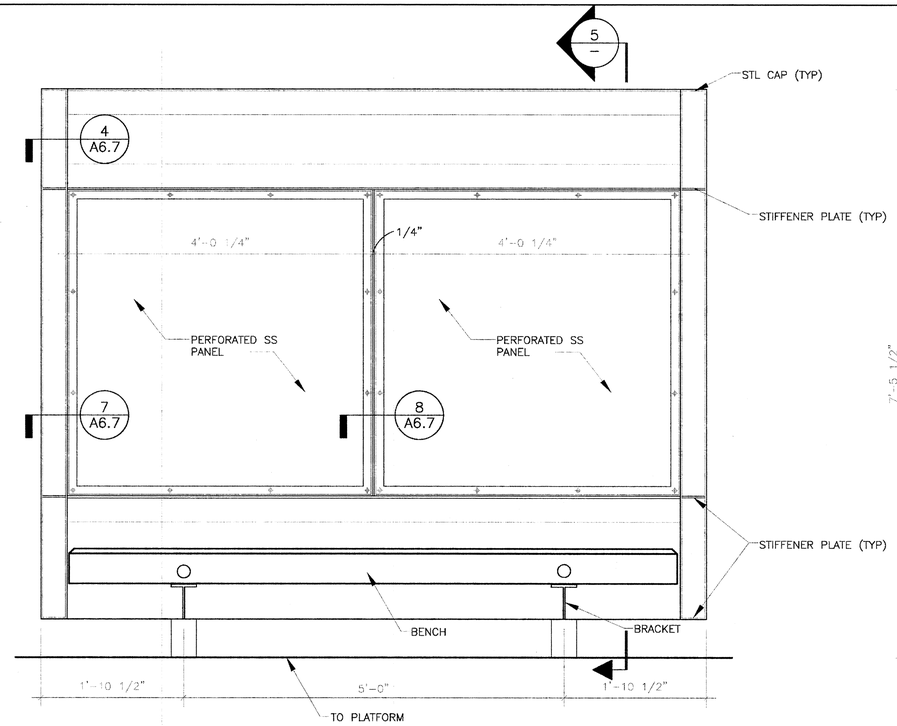

4 – ELEVATION
2 BAY–SINGLE BENCH: TYPE D
SCALE: 1"=1'-0"

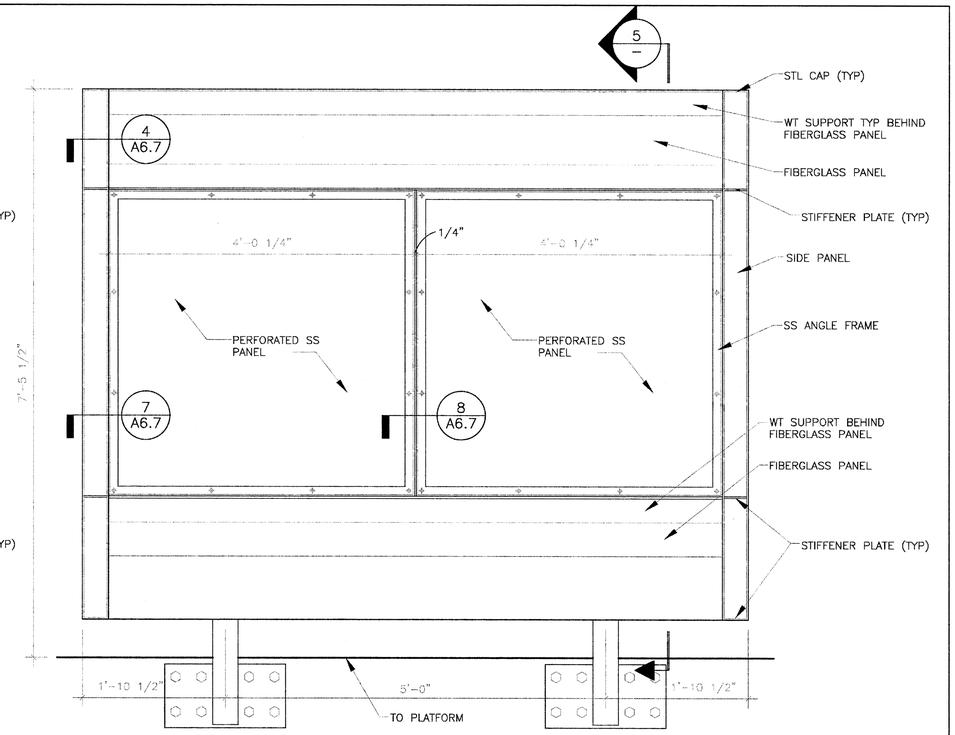

2 – ELEVATION
2 BAY–SINGLE BENCH: TYPE D
SCALE: 1"=1'-0"

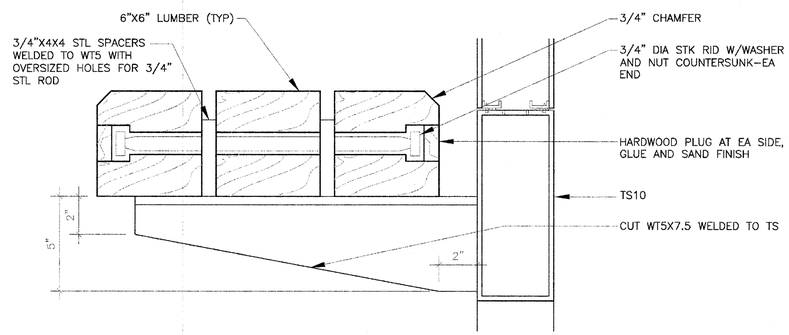

3 – DETAIL
2 BAY–SINGLE BENCH: TYPE D
SCALE: 3"=1'-0"

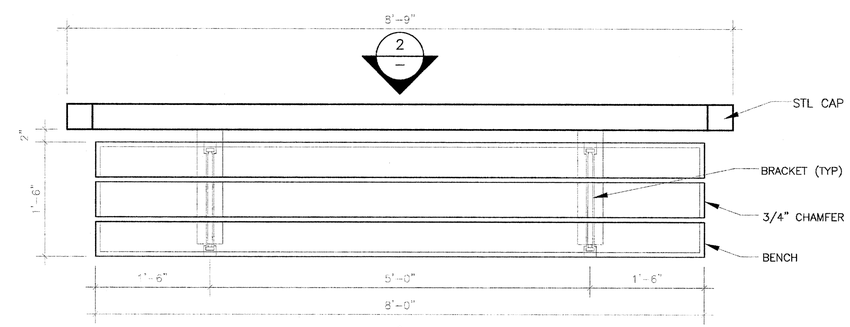

1 – PLAN
2 BAY–SINGLE BENCH: TYPE D
SCALE: 1"=1'-0"

NOTES:
1. SEE STRUCTURAL DWGS FOR ANCHOR BOLT AND FND FOOTING DETAILS. AND BASE/ANCHOR PLATES (TYP.)
2. FIBERGLASS PANELS AT EACH SIDE TYPICAL UNLESS OTHERWISE NOTED.
3. REFER TO INDIVIDUAL STATION DP FOR FIBERGLASS PANEL GRAPHIC CONTENT.
4. ALL TUBE CONNECTIONS SHALL BE BEVEL WELDS GROUND SMOOTH PRIOR TO GALVANIZING (UNO).
5. ALL WELDS FOR NON–TUBE SECTION CONNECTIONS SHALL BE FILLET WELDS PRIOR TO GALVANIZING (UNO).

0 1/2' 1' 2'
SCALE: 1" = 1'-0"

COMMONWEALTH OF MASSACHUSETTS REGISTERED ARCHITECT MICHEL A. BASKIN No.4453 BOSTON MA

MASSACHUSETTS BAY TRANSPORTATION AUTHORITY
FITCHBURG COMMUTER RAIL LINE
IMPROVEMENT PROJECT
CONTRACT NO. G67PS01

SOUTH ACTON STATION
SIGN DETAILS
TYPE D

ISSUE	DATE	DESCRIPTION	BY	CHKD.	APP.

HNTB 300 APOLLO DRIVE CHELMSFORD, MA 01824 (978) 905–4000
PROJECT MANAGER 5/30/12 Date

MASSACHUSETTS BAY TRANSPORTATION AUTHORITY
APPROVED BY: PROJECT MANAGER 6/30/12 Date

Lozano, Baskin, and Associates, Inc.
Architecture•Urban Design•City Planning
205 Mt. Auburn St. Watertown, MA 02472

HORIZ: N/A
VERT: N/A
DATE: 05/17/12

DES. BY	DR. BY	CHK. BY
MB DW	DW	MB

PLAN NO. 168625
SHEET A–6.5
ISSUE

FILE NAME: C:\Documents and Settings\Mackintosh LBA\local settings\temp\AcPublish_3664\ 05 A–SN0002.dwg
PLOT DATE: May 17, 2012 – 2:39pm

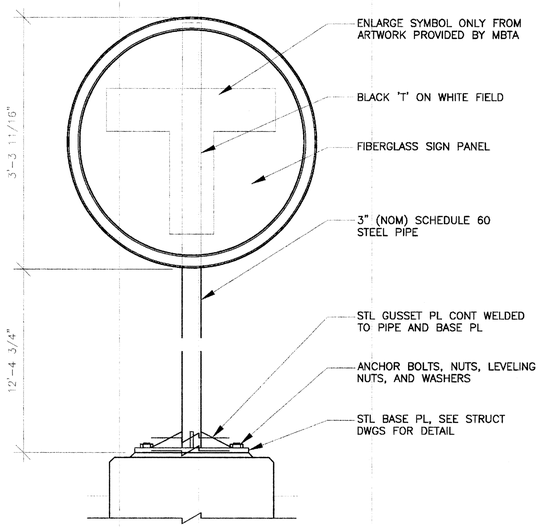

6 / – ELEVATION
LOLLYPOP SIGN: TYPE F
SCALE: 1"=1'-0"

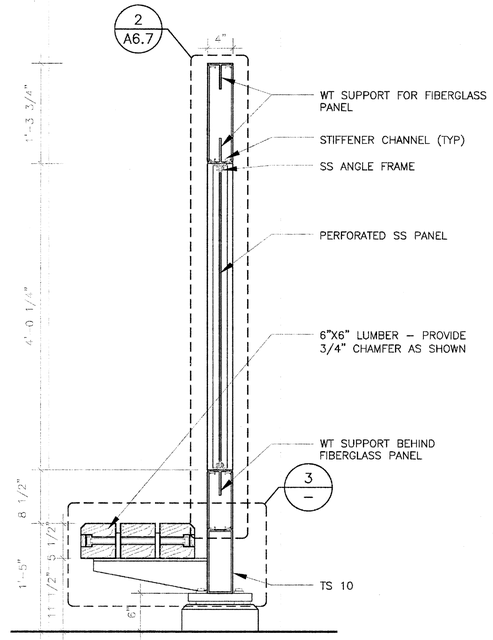

4 / – SECTION
2 BAY-SINGLE BENCH: TYPE E
SCALE: 1"=1'-0"

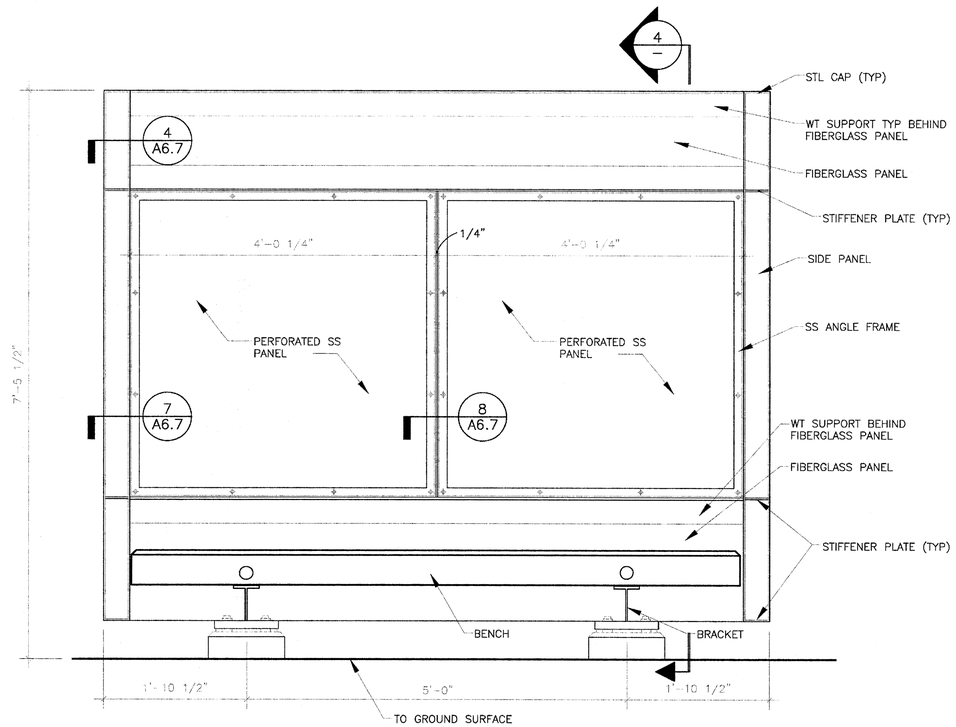

2 / – ELEVATION
2 BAY-SINGLE BENCH: TYPE E
SCALE: 1"=1'-0"

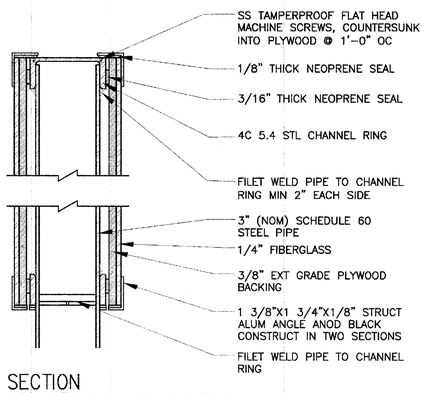

5 / – SECTION
LOLLYPOP SIGN: TYPE F
SCALE: 1"=1'-0"

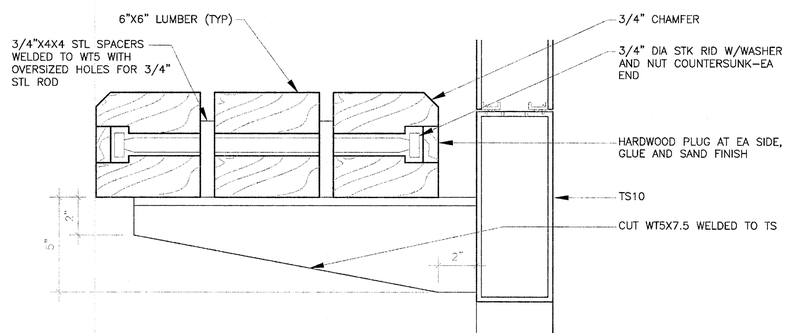

3 / – DETAIL
2 BAY-SINGLE BENCH: TYPE E
SCALE: 3"=1'-0"

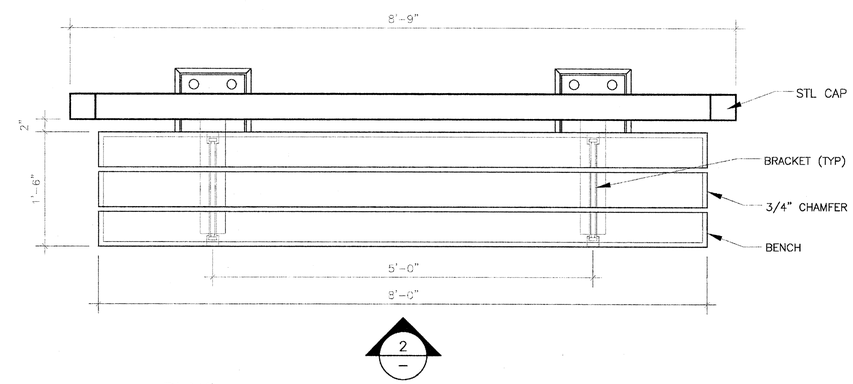

1 / – PLAN
2 BAY-SINGLE BENCH: TYPE E
SCALE: 1"=1'-0"

NOTES:
1. SEE STRUCTURAL DWGS FOR ANCHOR BOLT AND FND FOOTING DETAILS. AND BASE/ANCHOR PLATES (TYP.)
2. FIBERGLASS PANELS AT EACH SIDE TYPICAL UNLESS OTHERWISE NOTED.
3. REFER TO INDIVIDUAL STATION DP FOR FIBERGLASS PANEL GRAPHIC CONTENT.
4. ALL TUBE CONNECTIONS SHALL BE BEVEL WELDS GROUND SMOOTH PRIOR TO GALVANIZING (UNO).
5. ALL WELDS FOR NON-TUBE SECTION CONNECTIONS SHALL BE FILLET WELDS PRIOR TO GALVANIZING (UNO).

0 1/2' 1' 2'
SCALE: 1" = 1'-0"

REGISTERED ARCHITECT MICHAEL A. BASKIN No.4453 BOSTON MA COMMONWEALTH OF MASSACHUSETTS

MASSACHUSETTS BAY TRANSPORTATION AUTHORITY
FITCHBURG COMMUTER RAIL LINE
IMPROVEMENT PROJECT
CONTRACT NO. G67PS01

SOUTH ACTON STATION SIGN DETAILS TYPE E & F

ISSUE	DATE	DESCRIPTION	BY	CHKD.	APP.

HNTB
300 APOLLO DRIVE
CHELMSFORD, MA 01824
(978) 905-4000
PROJECT MANAGER 5/30/12 Date

MASSACHUSETTS BAY TRANSPORTATION AUTHORITY
APPROVED BY: 6/30/12
PROJECT MANAGER Date

Lozano, Baskin, and Associates, Inc.
Architecture•Urban Design•City Planning
205 Mt. Auburn St. Watertown, MA 02472

HORIZ: N/A	DES. BY MB	DR. BY DW	CHK. BY MB	PLAN NO. 168626
VERT: N/A				SHEET A-6.6
DATE: 05/17/12				ISSUE

FILE NAME: C:\Documents and Settings\Mackintosh LBA\local settings\temp\AcPublish_3664\ 05 A-SN0002.dwg
PLOT DATE: May 17, 2012 – 2:39pm

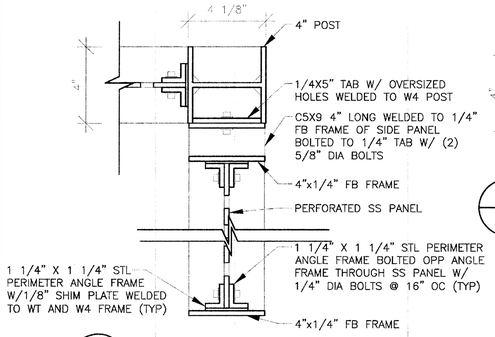

12 DETAIL: SIDE PANEL
SCALE: 3"=1'-0"

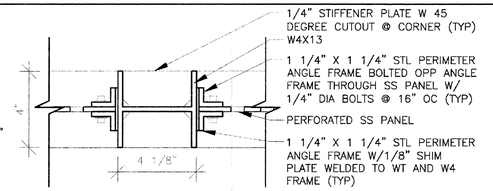

9 DETAIL: WINDSCREEN/POST/WINDSCREEN
SCALE: 3"=1'-0"

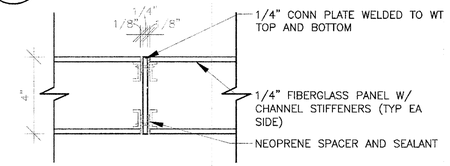

10 DETAIL: PANEL/PANEL
SCALE: 3"=1'-0"

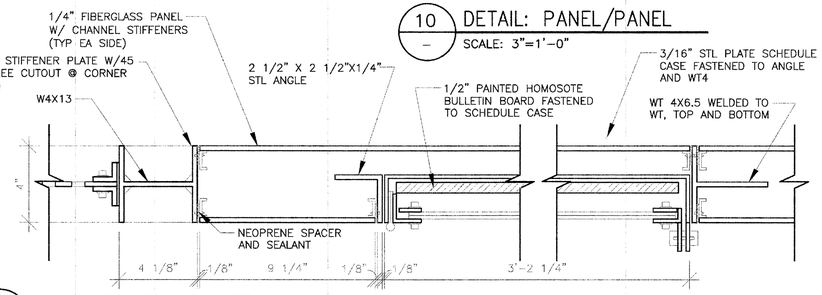

13 PLAN: SCHEDULE CASE
SCALE: 3"=1'-0"

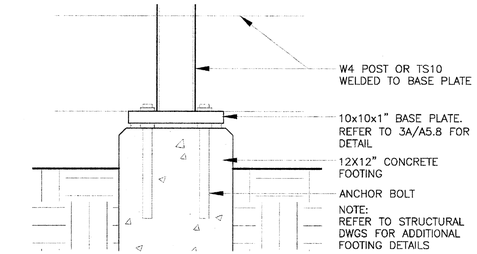

3 DETAIL: FOOTING MOUNT
SCALE: 1 1/2"=1'-0"

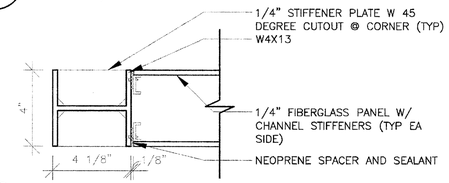

4 DETAIL: POST/PANEL
SCALE: 3"=1'-0"

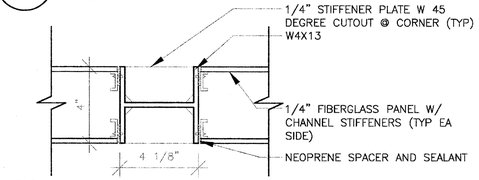

5 DETAIL: PANEL/ POST/PANEL
SCALE: 3"=1'-0"

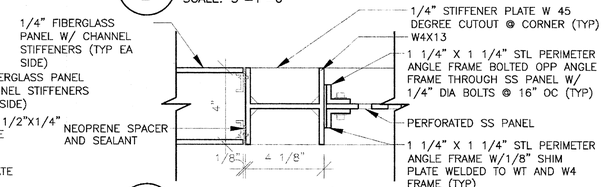

6 DETAIL: PANEL/ POST/WINDSCREEN
SCALE: 3"=1'-0"

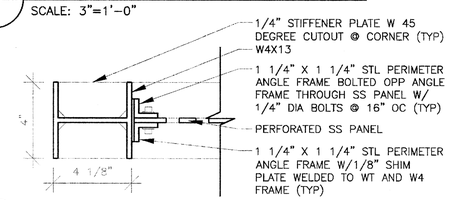

7 DETAIL: POST/WINDSCREEN
SCALE: 3"=1'-0"

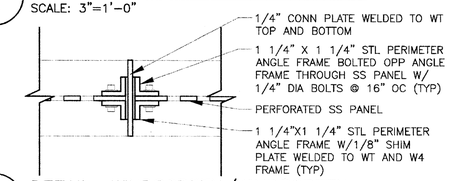

8 DETAIL: WINDSCREEN/WINDSCREEN
SCALE: 3"=1'-0"

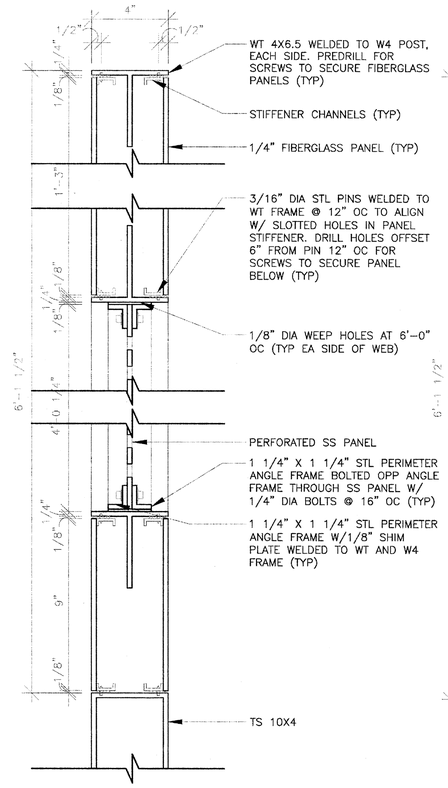

2 SECTION: WINDSCREEN
SCALE: 3"=1'-0"

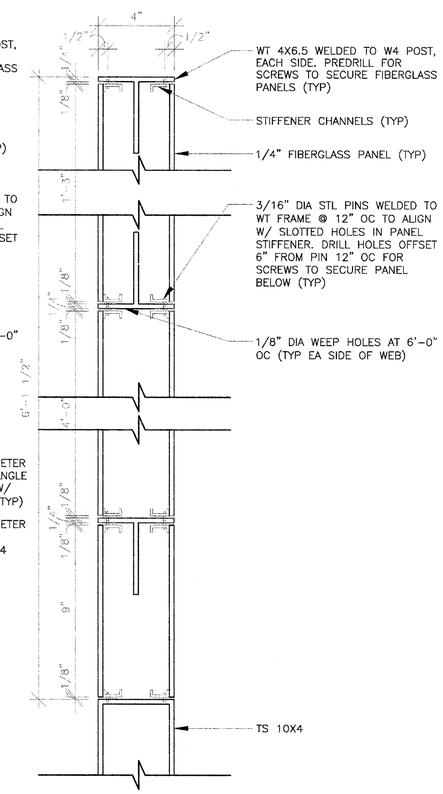

1 SECTION: SIGN
SCALE: 3"=1'-0"

NOTES:
1. SEE STRUCTURAL DWGS FOR ANCHOR BOLT AND FND FOOTING DETAILS. AND BASE/ANCHOR PLATES (TYP.)
2. FIBERGLASS PANELS AT EACH SIDE TYPICAL UNLESS OTHERWISE NOTED.
3. REFER TO INDIVIDUAL STATION DP FOR FIBERGLASS PANEL GRAPHIC CONTENT.
4. ALL TUBE CONNECTIONS SHALL BE BEVEL WELDS GROUND SMOOTH PRIOR TO GALVANIZING (UNO).
5. ALL WELDS FOR NON-TUBE SECTION CONNECTIONS SHALL BE FILLET WELDS PRIOR TO GALVANIZING (UNO).

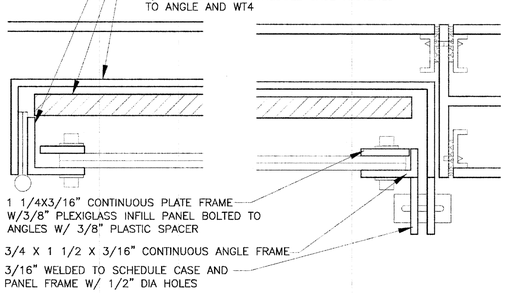

14 DETAIL: SCHEDULE CASE
SCALE: 6"=1'-0"

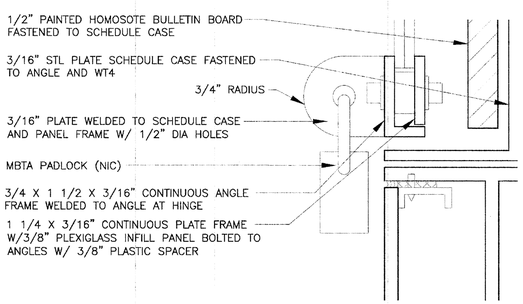

15 DETAIL: SCHEDULE CASE
SCALE: 6"=1'-0"

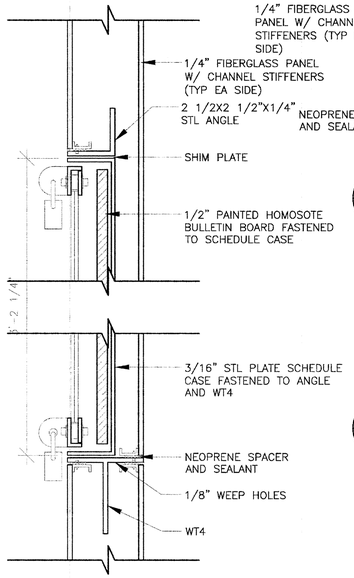

11 DETAIL: SCHEDULE CASE
SCALE: 3"=1'-0"

0 1/4' 1/2' 1'
SCALE: 1/2" = 1'-0"

FILE NAME: C:\Documents and Settings\Mackintosh LBA\local settings\temp\AcPublish_3664\ 05 A-SN0002.dwg
PLOT DATE: May 17, 2012 – 2:40pm

MASSACHUSETTS BAY TRANSPORTATION AUTHORITY

FITCHBURG COMMUTER RAIL LINE
IMPROVEMENT PROJECT
CONTRACT NO. G67PS01

SOUTH ACTON STATION
SIGN DETAILS
MISC

REGISTERED ARCHITECT
MICHAEL A. BASKIN
No.4453
BOSTON MA
COMMONWEALTH OF MASSACHUSETTS

ISSUE	DATE	DESCRIPTION	BY	CHKD.	APP.

HNTB
300 APOLLO DRIVE
CHELMSFORD, MA 01824
(978) 905-4000
PROJECT MANAGER 5/30/12 Date

MASSACHUSETTS BAY TRANSPORTATION AUTHORITY
APPROVED BY:
PROJECT MANAGER 6/30/12 Date

Lozano, Baskin, and Associates, Inc.
Architecture•Urban Design•City Planning
205 Mt. Auburn St. Watertown, MA 02472

HORIZ: N/A	DES. BY MB DW	DR. BY DW	CHK. BY MB	PLAN NO. 168627
VERT: N/A				SHEET A-6.7
DATE: 05/17/12				

ISSUE

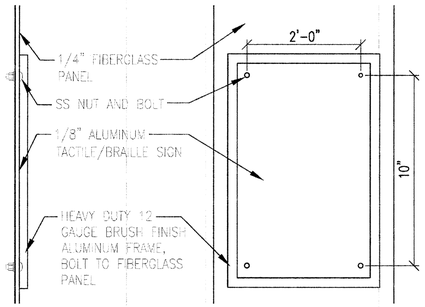

10 DETAIL: TACTILE/BRAILLE SIGN
1/4" = 1'-0"

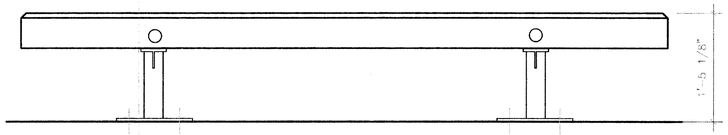

6 ELEVATION: BENCH TYPE H
SCALE: 1"=1'-0"

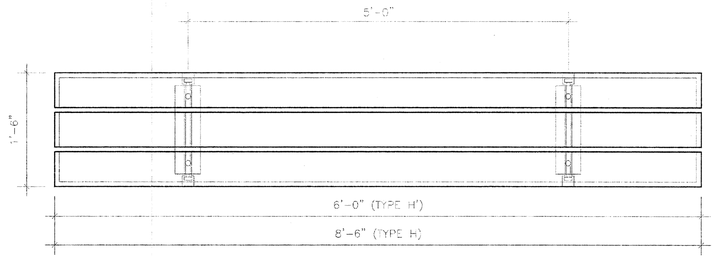

7 PLAN: BENCH TYPE H
SCALE: 1"=1'-0"

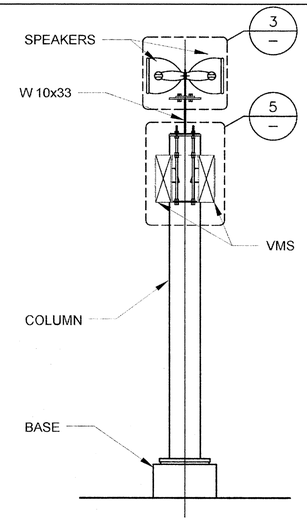

4 VARIABLE MESSAGE SIGN-DOUBLE: TYPE G ELEVATION
SCALE: 1/2"=1'-0"

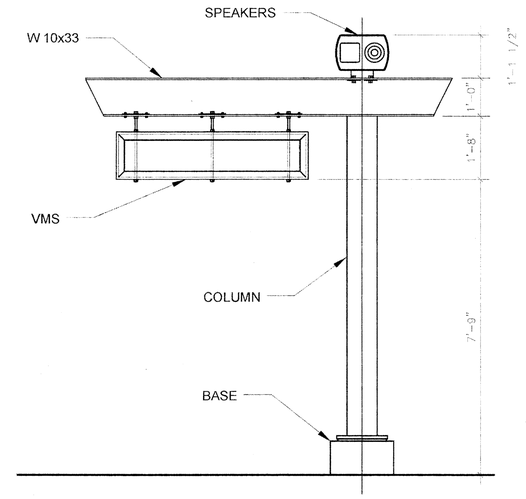

1 VARIABLE MESSAGE SIGE: TYPE G
SCALE: 1/2"=1'-0"

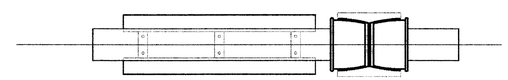

2 VARIABLE MESSAGE SIGN: TYPE G
SCALE: 1/2"=1'-0"

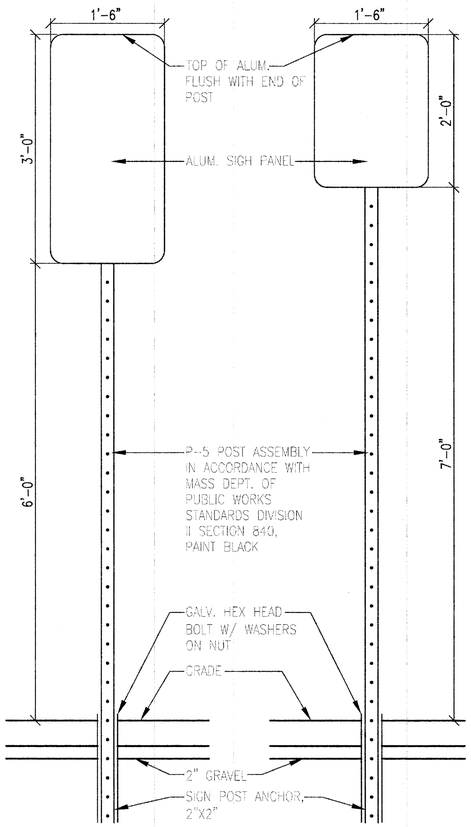

11 DETAIL: POST MOUNTED SIGNS
1" = 1'-0"

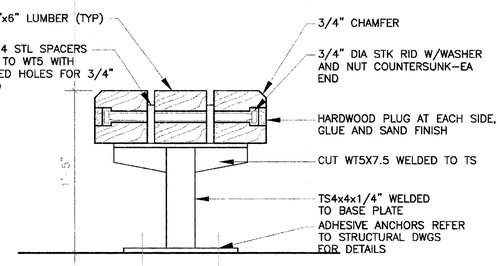

8 SECTION: BENCH TYPE H
SCALE: 1"=1'-0"

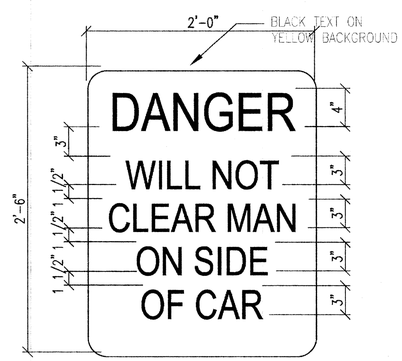

9 DETAIL: GATE EXIT SIGN
3" = 1'-0"

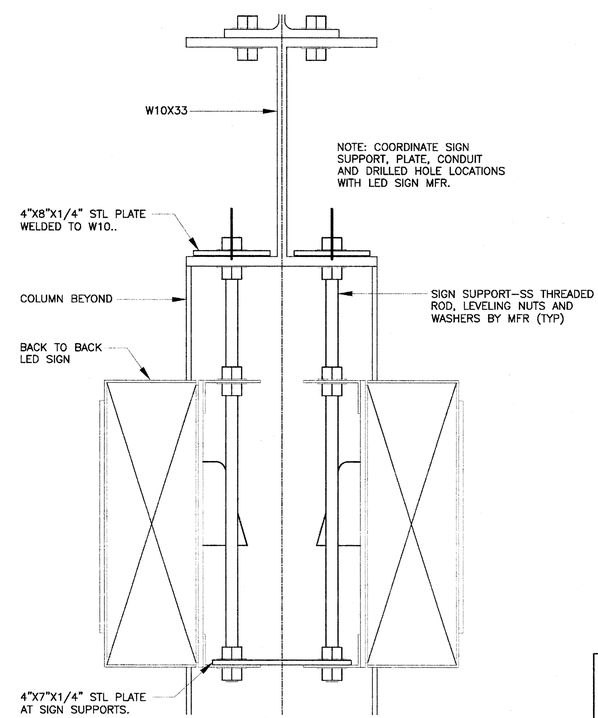

5 DETAIL: AUDIBLE SIGNAL DEVICE
SCALE: 6"=1'-0"

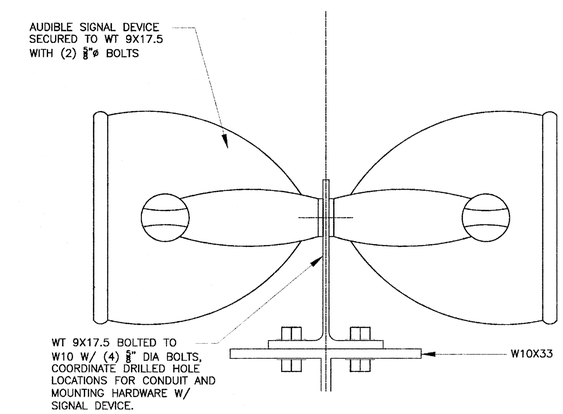

3 DETAIL: AUDIBLE SIGNAL DEVICE
SCALE: 6"=1'-0"

NOTES:
1. SEE STRUCTURAL DWGS FOR ANCHOR BOLT AND FND FOOTING DETAILS. AND BASE/ANCHOR PLATES (TYP.)
2. FIBERGLASS PANELS AT EACH SIDE TYPICAL UNLESS OTHERWISE NOTED.
3. REFER TO INDIVIDUAL STATION DP FOR FIBERGLASS PANEL GRAPHIC CONTENT.
4. ALL TUBE CONNECTIONS SHALL BE BEVEL WELDS GROUND SMOOTH PRIOR TO GALVANIZING (UNO).
5. ALL WELDS FOR NON-TUBE SECTION CONNECTIONS SHALL BE FILLET WELDS PRIOR TO GALVANIZING (UNO).

0 1/4' 1/2' 1'
SCALE: 1/2" = 1'-0"

REGISTERED ARCHITECT MICHEL A. BASKIN No.4453 BOSTON MA COMMONWEALTH OF MASSACHUSETTS

MASSACHUSETTS BAY TRANSPORTATION AUTHORITY

FITCHBURG COMMUTER RAIL LINE
IMPROVEMENT PROJECT
CONTRACT NO. G67PS01

SOUTH ACTON STATION
SIGN DETAILS
MISC

ISSUE	DATE	DESCRIPTION	BY	CHKD.	APP.

HNTB
300 APOLLO DRIVE
CHELMSFORD, MA 01824
(978) 905-4000
PROJECT MANAGER Date

MASSACHUSETTS BAY TRANSPORTATION AUTHORITY
APPROVED BY: 6/30/12
PROJECT MANAGER Date

Lozano, Baskin, and Associates, Inc.
Architecture•Urban Design•City Planning
205 Mt. Auburn St. Watertown, MA 02472

HORIZ: N/A	DES. BY	DR. BY	CHK. BY	PLAN NO. 168628	ISSUE
VERT: N/A	MB	DW	MB		
DATE: 05/17/12	DW			SHEET A-6.8	

FILE NAME: C:\Documents and Settings\Mackintosh LBA\local settings\temp\AcPublish_3664\ 05 A-SN0002.dwg
PLOT DATE: May 17, 2012 - 2:40pm

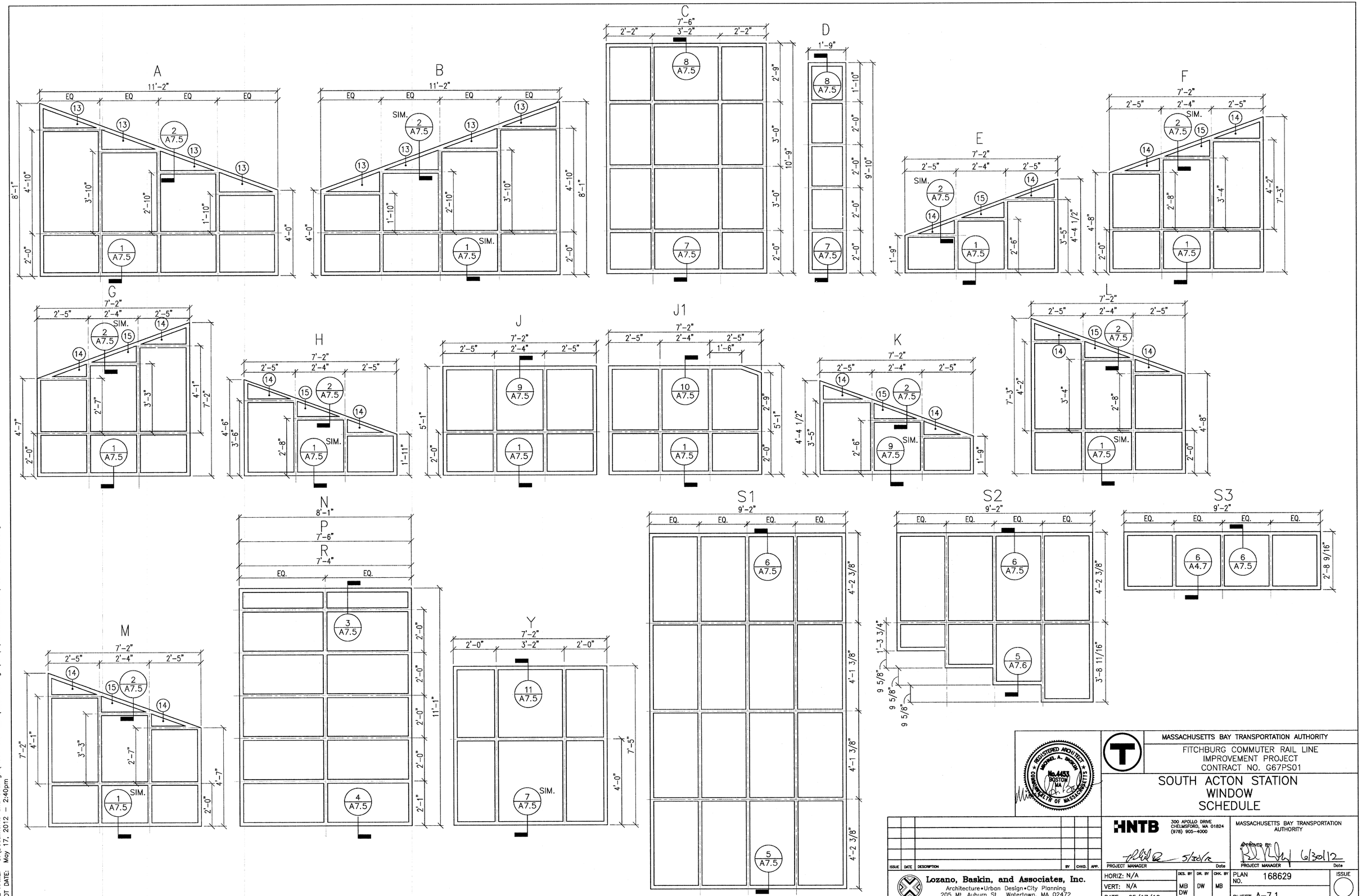

FILE NAME: C:\Documents and Settings\Mackintosh LBA\local settings\temp\AcPublish_3664\ 06 A-SC0001.dwg
PLOT DATE: May 17, 2012 – 2:40pm

MASSACHUSETTS BAY TRANSPORTATION AUTHORITY

FITCHBURG COMMUTER RAIL LINE
IMPROVEMENT PROJECT
CONTRACT NO. G67PS01

SOUTH ACTON STATION WINDOW SCHEDULE

REGISTERED ARCHITECT MICHAEL A. BASKIN No.4457 BOSTON MA COMMONWEALTH OF MASSACHUSETTS

ISSUE	DATE	DESCRIPTION	BY	CHKD.	APP.

HNTB
300 APOLLO DRIVE
CHELMSFORD, MA 01824
(978) 905-4000

PROJECT MANAGER 5/30/12 Date

MASSACHUSETTS BAY TRANSPORTATION AUTHORITY
APPROVED BY: PROJECT MANAGER 6/30/12 Date

Lozano, Baskin, and Associates, Inc.
Architecture•Urban Design•City Planning
205 Mt. Auburn St. Watertown, MA 02472

HORIZ: N/A	DES. BY	DR. BY	CHK. BY	PLAN NO. 168629	ISSUE
VERT: N/A	MB	DW	MB		
DATE: 05/17/12	DW			SHEET A-7.1	

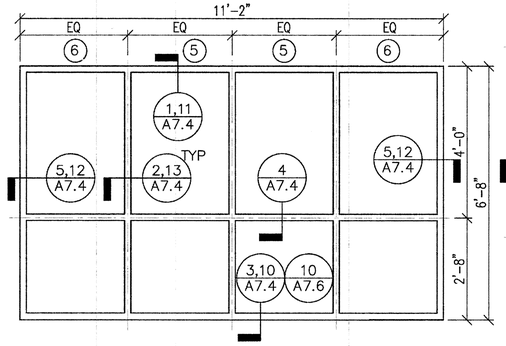

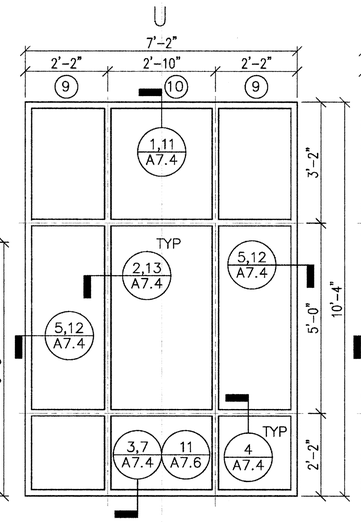

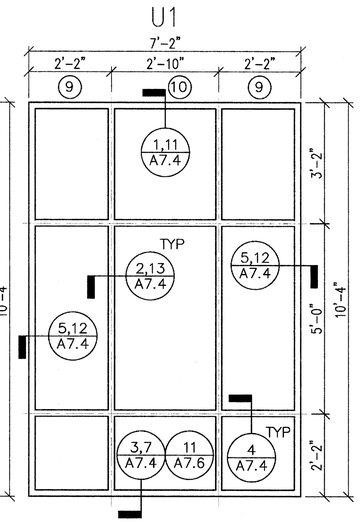

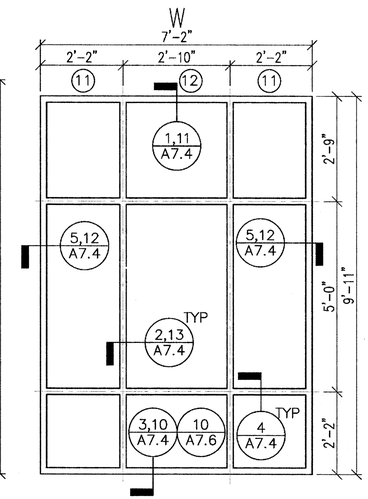

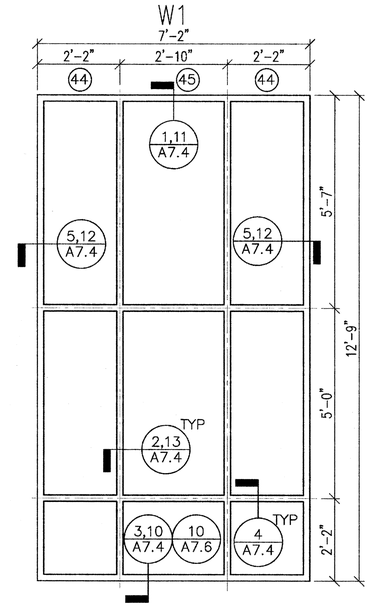

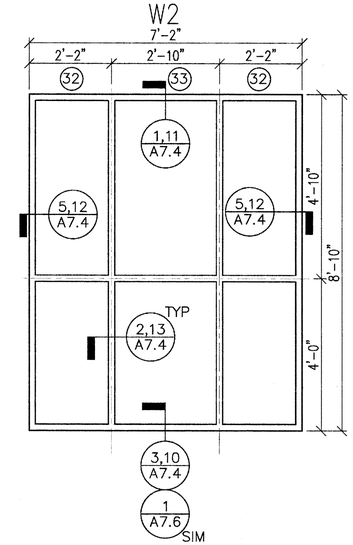

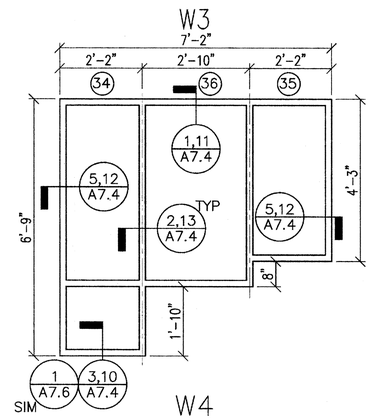

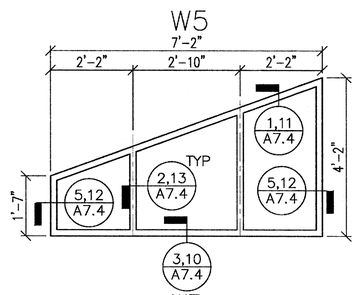

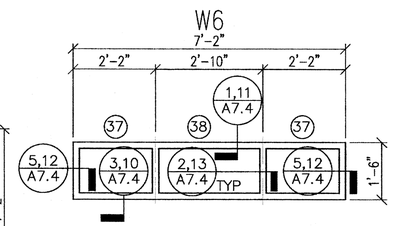

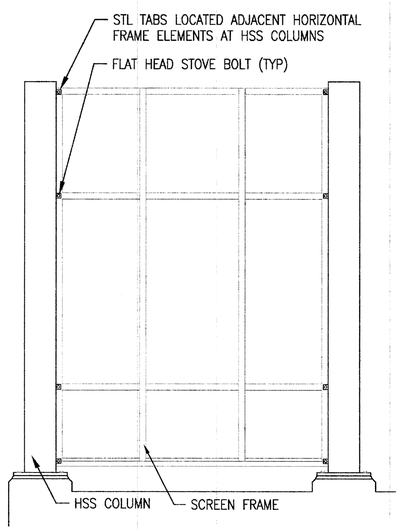

ELEVATION: FRAME CONNECTION
1/2" = 1'-0"

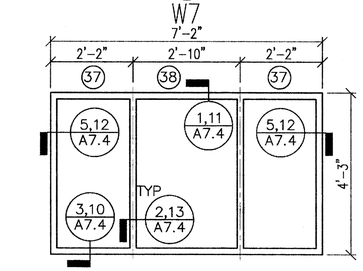

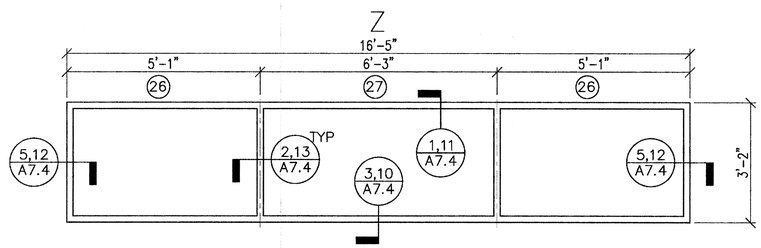

REGISTERED ARCHITECT
MICHAEL A. BISKIN
No. 4453
BOSTON, MA
COMMONWEALTH OF MASSACHUSETTS

MASSACHUSETTS BAY TRANSPORTATION AUTHORITY

FITCHBURG COMMUTER RAIL LINE
IMPROVEMENT PROJECT
CONTRACT NO. G67PS01

SOUTH ACTON STATION PROTECTIVE SCREEN SCHEDULE

ISSUE	DATE	DESCRIPTION	BY	CHKD.	APP.

HNTB
300 APOLLO DRIVE
CHELMSFORD, MA 01824
(978) 905-4000

PROJECT MANAGER — Date 5/30/12

MASSACHUSETTS BAY TRANSPORTATION AUTHORITY
APPROVED BY:
PROJECT MANAGER — Date 6/30/12

Lozano, Baskin, and Associates, Inc.
Architecture•Urban Design•City Planning
205 Mt. Auburn St. Watertown, MA 02472

HORIZ: N/A	DES. BY	DR. BY	CHK. BY	PLAN NO. 168630	ISSUE
VERT: N/A	MB	DW	MB		
DATE: 05/17/12	DW			SHEET A-7.2	

FILE NAME: C:\Documents and Settings\Mackintosh LBA\local settings\temp\AcPublish_3664\ 06 A-SC0001.dwg
PLOT DATE: May 17, 2012 – 2:41pm

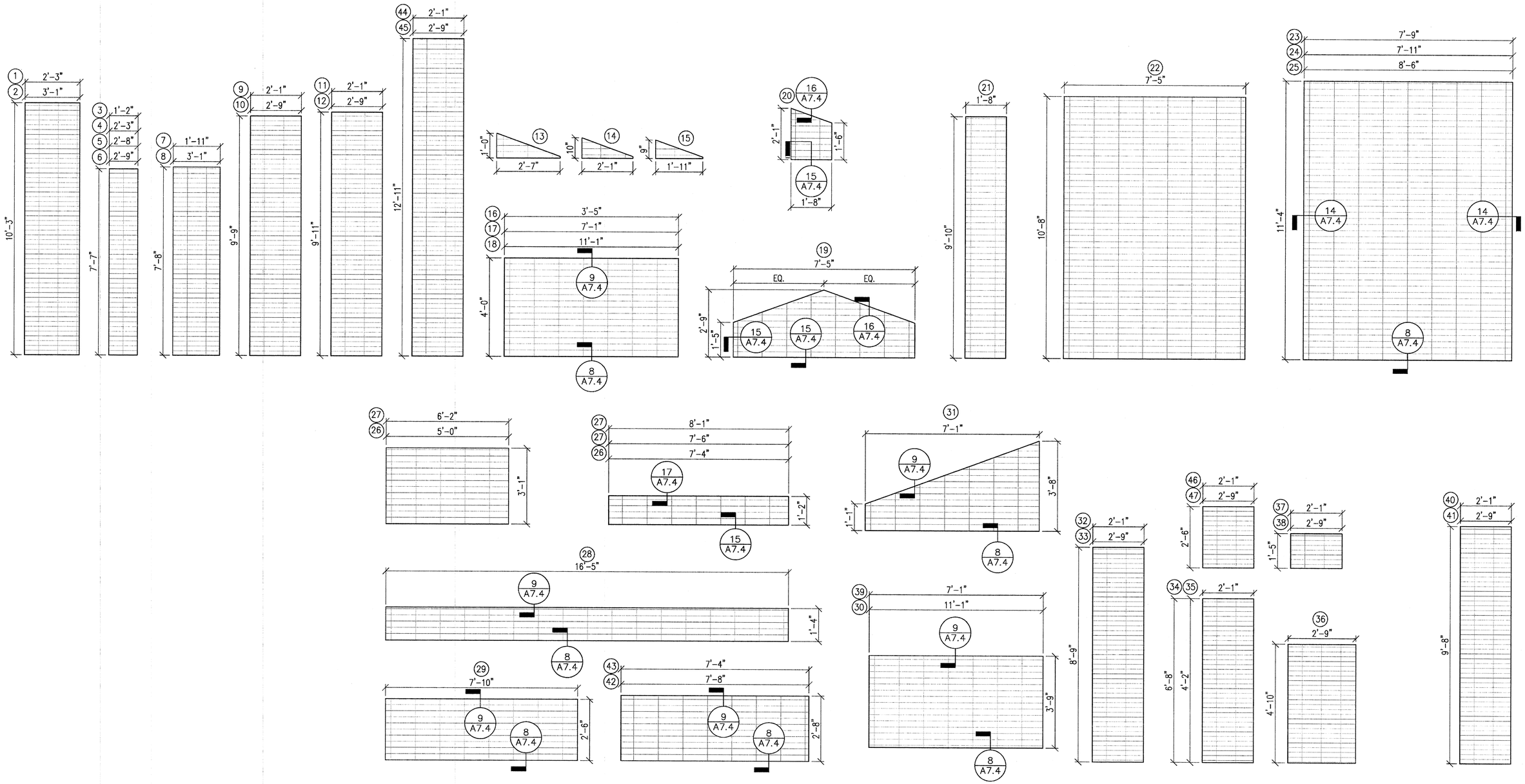

FILE NAME: C:\Documents and Settings\Mackintosh LBA\local settings\temp\AcPublish_3664\ 06 A-SC0001.dwg
PLOT DATE: May 17, 2012 – 2:41pm

MASSACHUSETTS BAY TRANSPORTATION AUTHORITY

FITCHBURG COMMUTER RAIL LINE
IMPROVEMENT PROJECT
CONTRACT NO. G67PS01

SOUTH ACTON STATION PROTECTIVE SCREEN SCHEDULE

REGISTERED ARCHITECT MICHAEL A. BASKIN No. 4453 BOSTON, MA COMMONWEALTH OF MASSACHUSETTS

ISSUE	DATE	DESCRIPTION	BY	CHKD.	APP.

Lozano, Baskin, and Associates, Inc.
Architecture•Urban Design•City Planning
205 Mt. Auburn St. Watertown, MA 02472

HNTB
300 APOLLO DRIVE
CHELMSFORD, MA 01824
(978) 905-4000

PROJECT MANAGER 5/30/12 Date

MASSACHUSETTS BAY TRANSPORTATION AUTHORITY
APPROVED BY:
PROJECT MANAGER 6/30/12 Date

HORIZ: N/A	DES. BY	DR. BY	CHK. BY	PLAN NO. 168631	ISSUE
VERT: N/A	MB	DW	MB		
DATE: 05/17/12	DW			SHEET A-7.3	

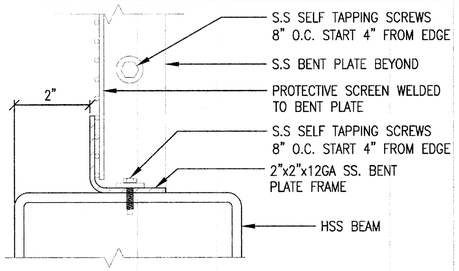

15 DETAIL: SCREEN BASE/JAMB
3" = 1'-0"

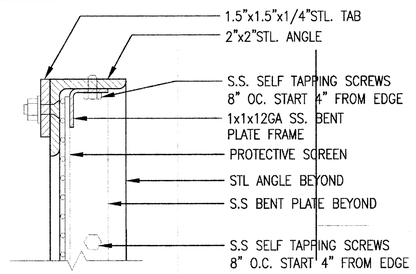

11 DETAIL: SCREEN ASSEMBLY HEAD
3" = 1'-0"

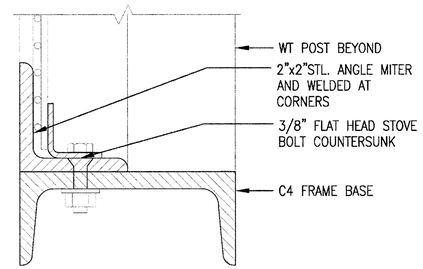

7 DETAIL: SCREEN FRAME SILL
3" = 1'-0"

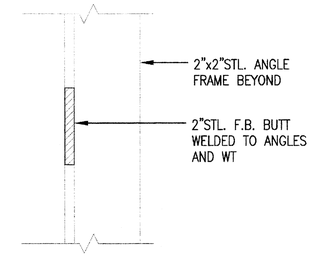

4 DETAIL: SCREEN FRAME MUNTIN
3" = 1'-0"

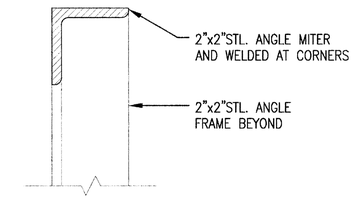

1 DETAIL: SCREEN FRAME HEAD
3" = 1'-0"

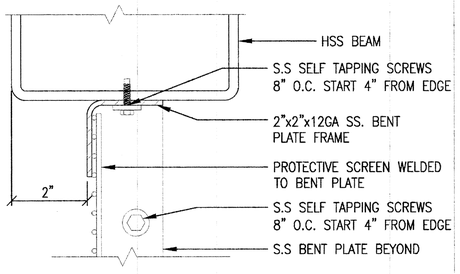

16 DETAIL: SCREEN HEAD
3" = 1'-0"

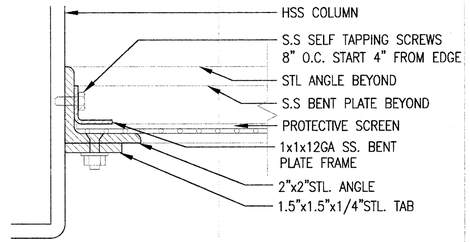

12 DETAIL: SCREEN ASSEMBLY JAMB
3" = 1'-0"

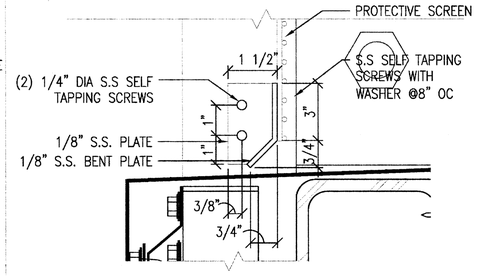

8 DETAIL: SCREEN BASE
3" = 1'-0"

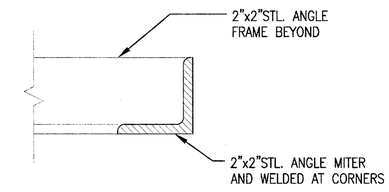

5 DETAIL: SCREEN FRAME JAMB
3" = 1'-0"

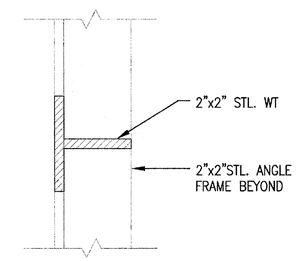

2 DETAIL: SCREEN FRAME MULLION
3" = 1'-0"

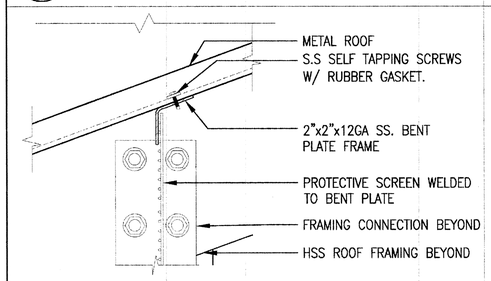

17 DETAIL: SCREEN HEAD
3" = 1'-0"

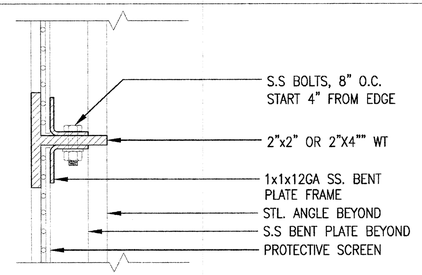

13 DETAIL: SCREEN ASSEMBLY MUNTIN
3" = 1'-0"

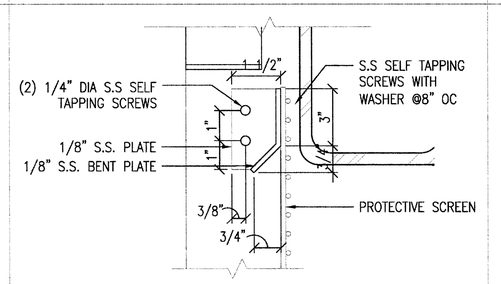

9 DETAIL: SCREEN HEAD
3" = 1'-0"

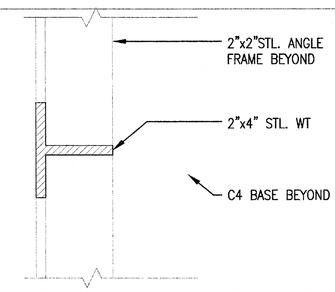

6 DETAIL: SCREEN FRAME MULLION
3" = 1'-0"

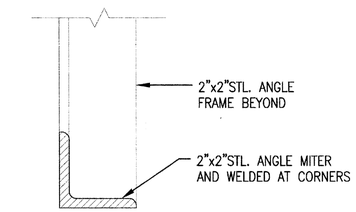

3 DETAIL: SCREEN FRAME SILL
3" = 1'-0"

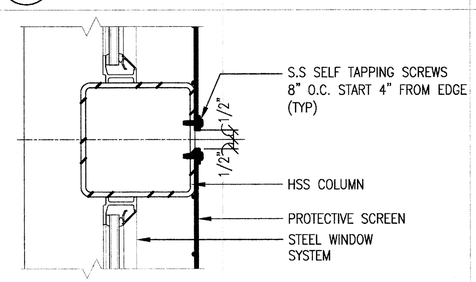

14 DETAIL: BRIDGE SCREEN JAMB
3" = 1'-0"

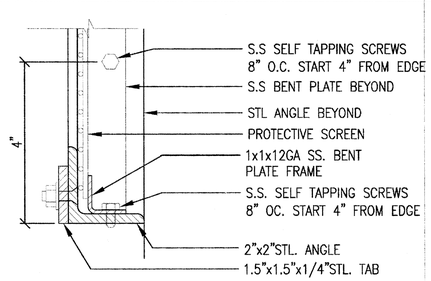

10 DETAIL: SCREEN ASSEMBLY BASE
3" = 1'-0"

REGISTERED ARCHITECT
MICHAEL A. BROWN
No.4453
BOSTON
MA
COMMONWEALTH OF MASSACHUSETTS

MASSACHUSETTS BAY TRANSPORTATION AUTHORITY

FITCHBURG COMMUTER RAIL LINE
IMPROVEMENT PROJECT
CONTRACT NO. G67PS01

SOUTH ACTON STATION PROTECTIVE SCREEN DETAILS

ISSUE	DATE	DESCRIPTION	BY	CHKD.	APP.

HNTB
300 APOLLO DRIVE
CHELMSFORD, MA 01824
(978) 905-4000

PROJECT MANAGER — Date

MASSACHUSETTS BAY TRANSPORTATION AUTHORITY
APPROVED BY:
PROJECT MANAGER — Date 6/30/12

Lozano, Baskin, and Associates, Inc.
Architecture•Urban Design•City Planning
205 Mt. Auburn St. Watertown, MA 02472

HORIZ: N/A
VERT: N/A
DATE: 05/17/12

DES. BY	DR. BY	CHK. BY
MB DW	DW	MB

PLAN NO. 168632
SHEET A-7.4
ISSUE

FILE NAME: C:\Documents and Settings\Mackintosh LBA\local settings\temp\AcPublish_3664\ 06 A-SC0001.dwg
PLOT DATE: May 17, 2012 - 2:43pm

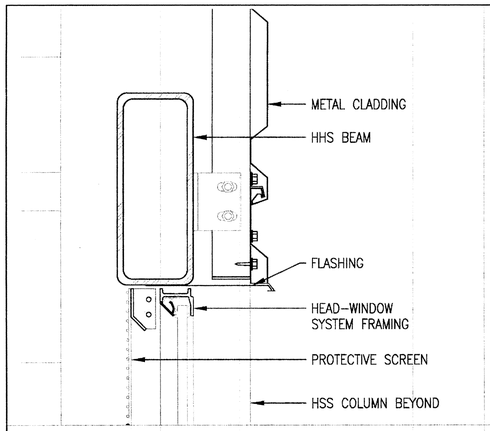

11 DETAIL: WINDOW HEAD
3" = 1'-0"

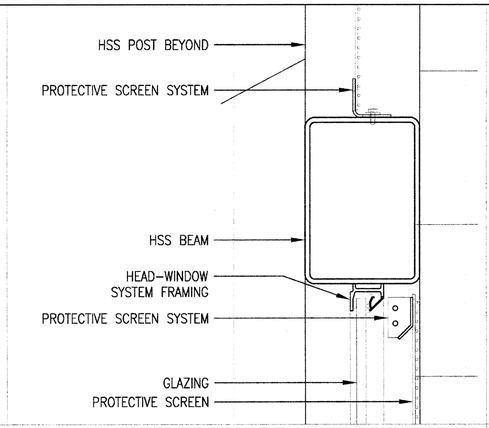

8 DETAIL: WIDOW HEAD-BRIDGE END
3" = 1'-0"

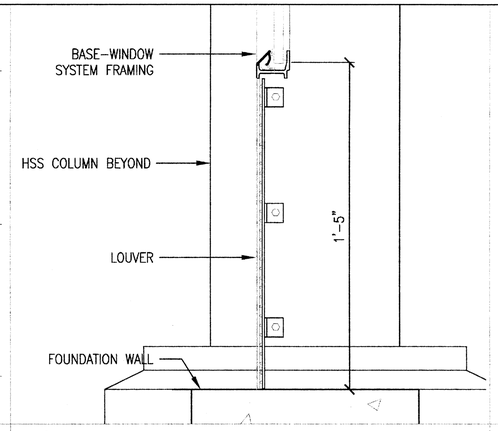

5 DETAIL: WINDOW BASE-ELEVATOR
3" = 1'-0"

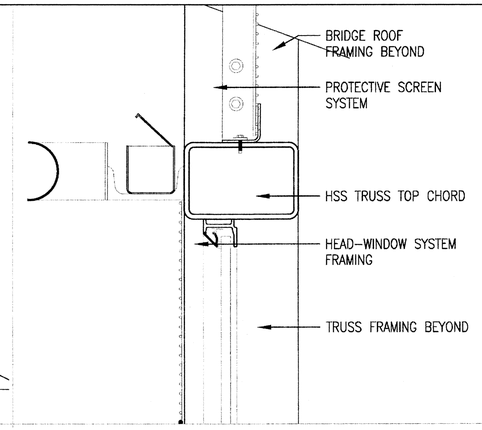

3 DETAIL: WINDOW HEAD-BRIDGE
3" = 1'-0"

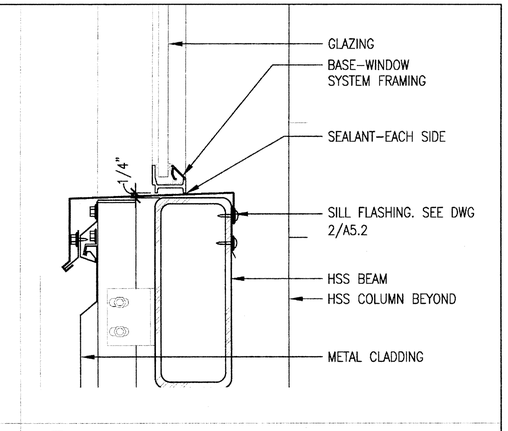

1 DETAIL: WINDOW BASE
3" = 1'-0"

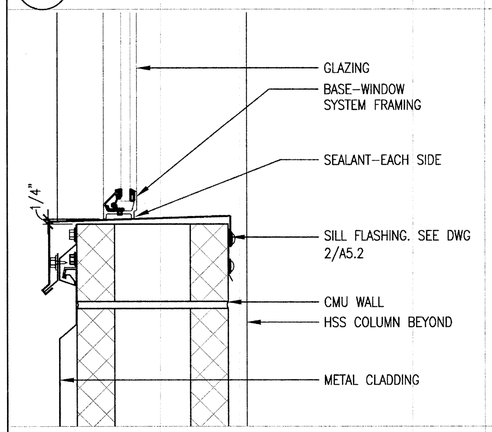

12 DETAIL: WINDOW BASE
3" = 1'-0"

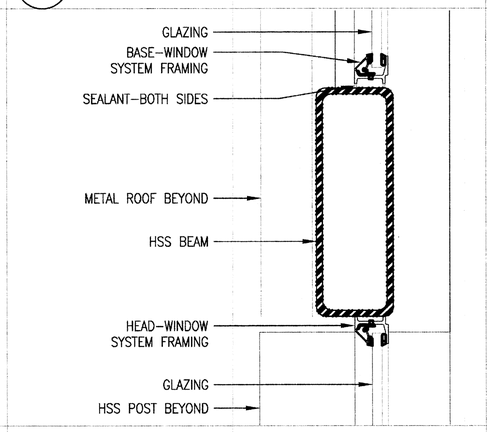

9 DETAIL: WIDOW HEAD
3" = 1'-0"

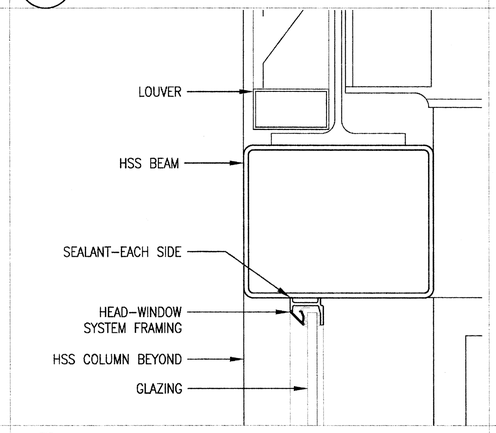

6 DETAIL: WINDOW HEAD-ELEVATOR
3" = 1'-0"

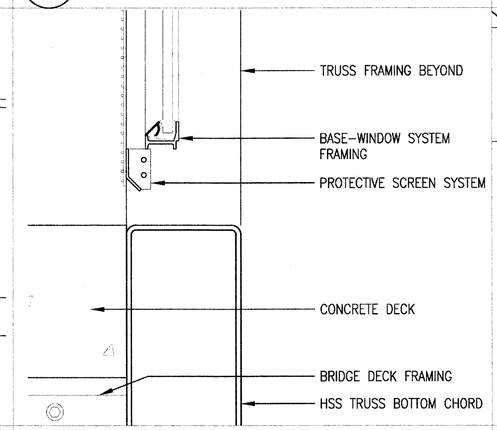

4 DETAIL: WINDOW HEAD-BRIDGE
3" = 1'-0"

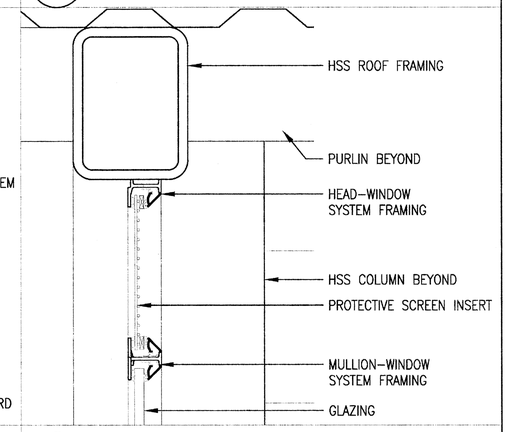

2 DETAIL: WINDOW HEAD
3" = 1'-0"

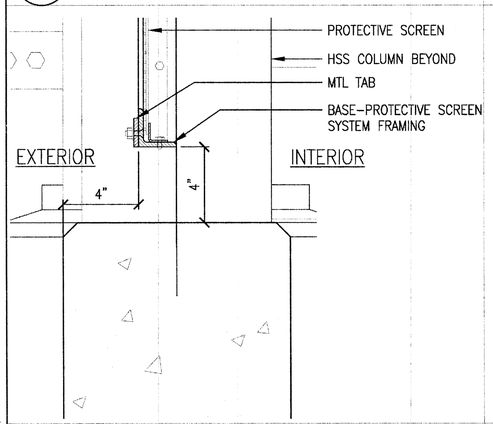

13 DETAIL: PROTECTIVE SCREEN BASE
3" = 1'-0"

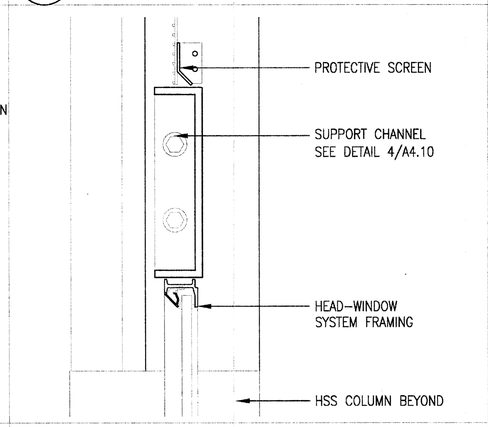

10 DETAIL: WINDOW HEAD
3" = 1'-0"

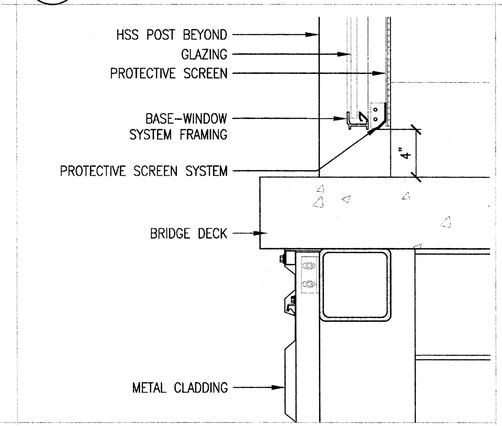

7 DETAIL: WIDOW BASE-BRIDGE END
3" = 1'-0"

0 1" 2" 4"
SCALE: 3" = 1'-0"

MASSACHUSETTS BAY TRANSPORTATION AUTHORITY

FITCHBURG COMMUTER RAIL LINE
IMPROVEMENT PROJECT
CONTRACT NO. G67PS01

SOUTH ACTON STATION
DETAILS
FRAMES

ISSUE	DATE	DESCRIPTION	BY	CHKD.	APP.

HNTB
300 APOLLO DRIVE
CHELMSFORD, MA 01824
(978) 905-4000

PROJECT MANAGER 5/30/12 Date

MASSACHUSETTS BAY TRANSPORTATION AUTHORITY
APPROVED BY:
PROJECT MANAGER 6/30/12 Date

Lozano, Baskin, and Associates, Inc.
Architecture•Urban Design•City Planning
205 Mt. Auburn St. Watertown, MA 02472

HORIZ: N/A	DES. BY	DR. BY	CHK. BY
VERT: N/A	MB	DW	MB
DATE: 05/17/12	DW		

PLAN NO. 168633
SHEET A-7.5
ISSUE

FILE NAME: C:\Documents and Settings\Mackintosh LBA\local settings\temp\AcPublish_3664\ 06 A-SC0001.dwg
PLOT DATE: May 17, 2012 - 2:44pm

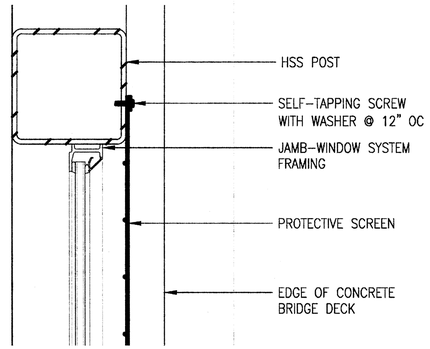

8 DETAIL: WIDOW JAMB-BRIDGE
3" = 1'-0"

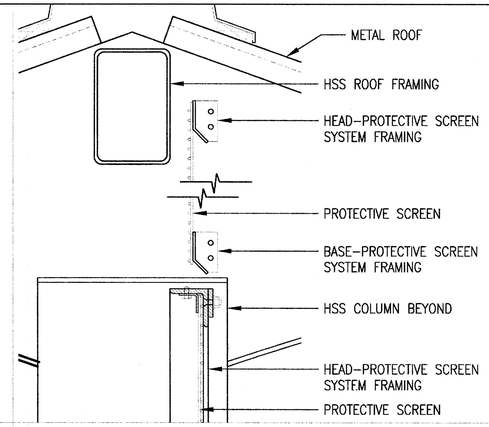

5

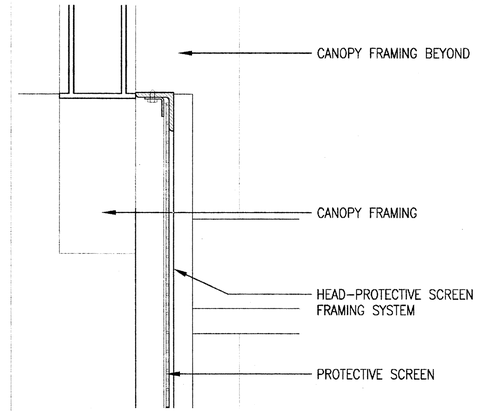

3 DETAIL: SCREEN HEAD CANOPY END
3" = 1'-0"

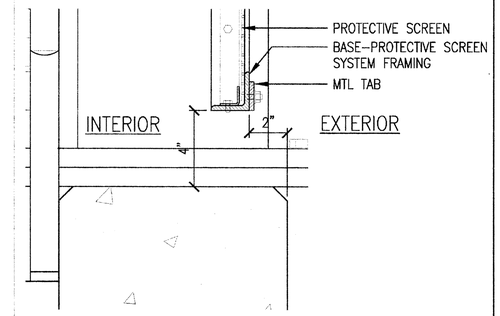

1 DETAIL: PROTECTIVE SCREEN BASE
3" = 1'-0"

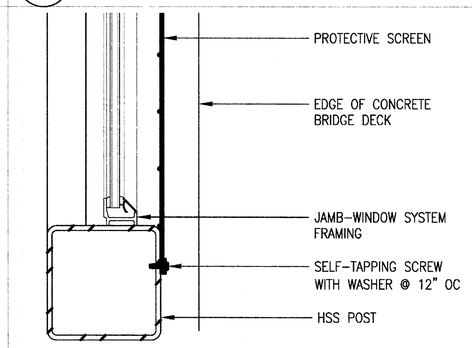

6 DETAIL: WINDOW JAMB-BRIDGE
3" = 1'-0"

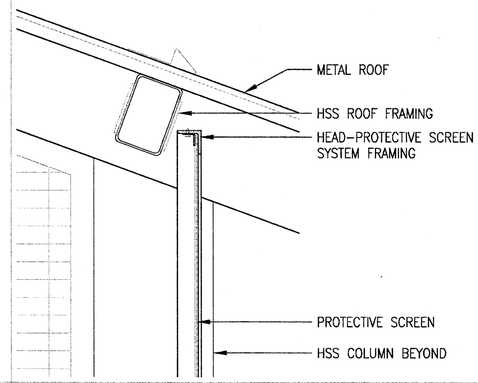

4 DETAIL: PROTECTIVE SCREEN HEAD
3" = 1'-0"

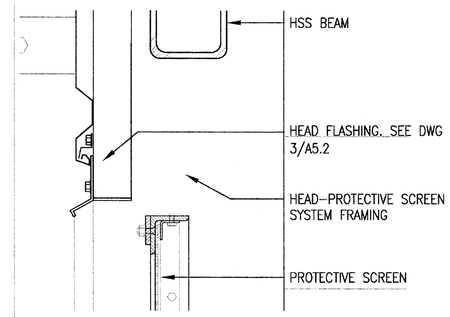

2 DETAIL: PROTECTIVE SCREEN HEAD
3" = 1'-0"

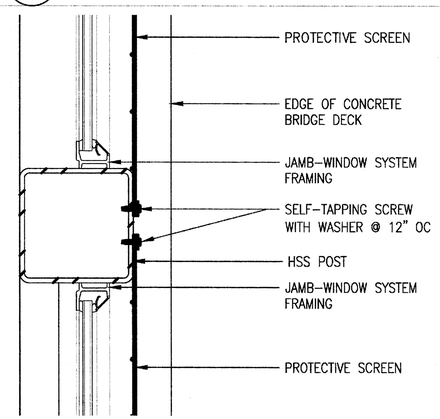

7 DETAIL: WINDOW JAMB-BRIDGE
3" = 1'-0"

11 12 13 9 10

MASSACHUSETTS BAY TRANSPORTATION AUTHORITY

FITCHBURG COMMUTER RAIL LINE
IMPROVEMENT PROJECT
CONTRACT NO. G67PS01

SOUTH ACTON STATION
DETAILS
FRAMES

REGISTERED ARCHITECT MONEL A. BASKIN No.4453 BOSTON MA COMMONWEALTH OF MASSACHUSETTS

ISSUE	DATE	DESCRIPTION	BY	CHKD.	APP.

HNTB
300 APOLLO DRIVE
CHELMSFORD, MA 01824
(978) 905-4000

PROJECT MANAGER 5/30/12 Date

MASSACHUSETTS BAY TRANSPORTATION AUTHORITY
APPROVED BY:
PROJECT MANAGER 6/30/12 Date

Lozano, Baskin, and Associates, Inc.
Architecture•Urban Design•City Planning
205 Mt. Auburn St. Watertown, MA 02472

HORIZ: N/A	DES. BY	DR. BY	CHK. BY	PLAN NO. 168634	ISSUE
VERT: N/A	MB	DW	MB		
DATE: 05/17/12	DW			SHEET A-7.6	

FILE NAME: C:\Documents and Settings\Mackintosh LBA\local settings\temp\AcPublish_3664\ 06 A-SC0001.dwg
PLOT DATE: May 17, 2012 - 2:45pm

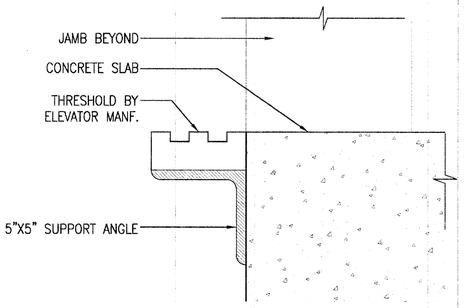

7 DETAIL: ELEVATOR THRESHOLD
3" = 1'-0"

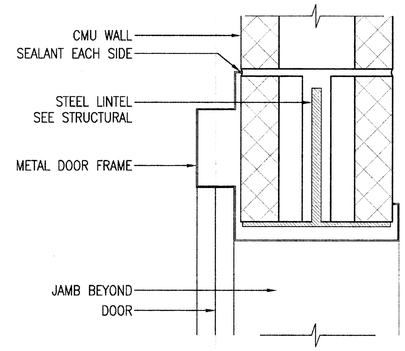

4 DETAIL: ELEVATOR HEAD
3" = 1'-0"

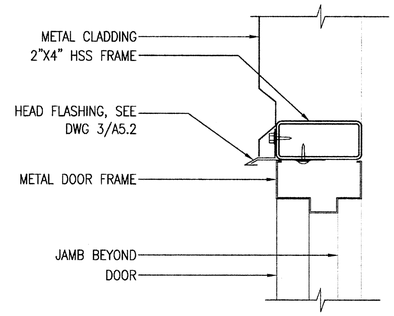

1 DETAIL: DOOR HEAD
3" = 1'-0"

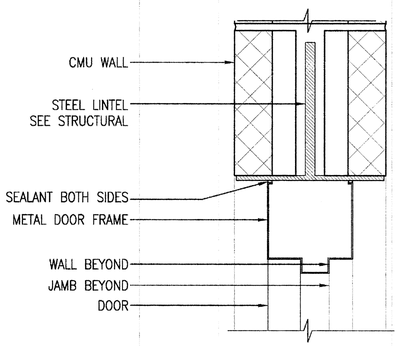

8 DETAIL: DOOR HEAD
3" = 1'-0"

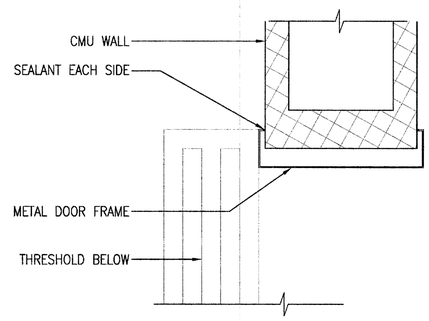

5 DETAIL: ELEVATOR JAMB
3" = 1'-0"

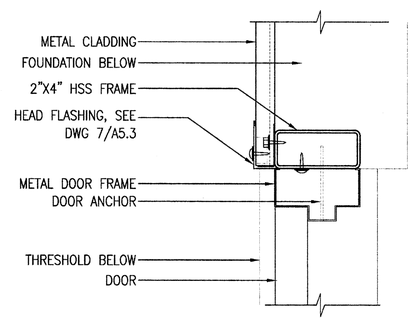

2 DETAIL: DOOR JAMB
3" = 1'-0"

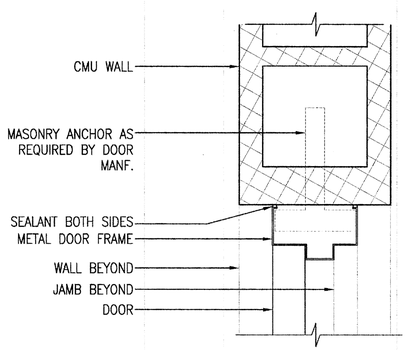

9 DETAIL: DOOR JAMB
3" = 1'-0"

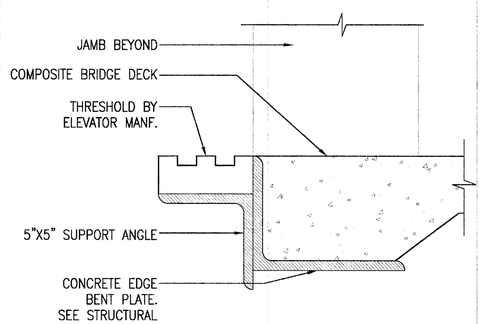

6 DETAIL: ELEVATOR THRESHOLD
3" = 1'-0"

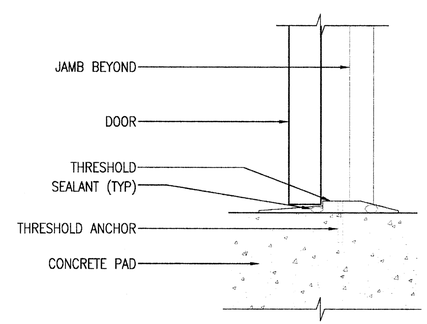

3 DETAIL: DOOR THRESHOLD
3" = 1'-0"

DOOR SCHEDULE

DOOR #	TYPE		DETAILS			HARDWARE GROUP	REMARKS
	DOOR	FRAME	JAMB	HEAD	THRESHOLD		
1	A	2	2/A7.5	1/A7.5	3/A7.5	1	OUTBOUND ELEVATOR CONTROL ROOM
2	–	–	4/A7.5	5/A7.5	7/A7.5		OUTBOUND PLATFORM LEVEL ELEVATOR
3	B	1	9/A7.5	8/A7.5	–	1	OUTBOUND MBTA COMMUNICATIONS ROOM
4	B	1	9/A7.5	8/A7.5	–	1	OUTBOUND COMMUNICATIONS FOYER
5	B	1	9/A7.5	8/A7.5	–	1	INBOUND ELECTRIC ROOM
6	–	–	4/A7.5	5/A7.5	7/A7.5		INBOUND PLATFORM LEVEL ELEVATOR
7	A	2	2/A7.5	1/A7.5	3/A7.5	1	INBOUND ELEVATOR CONTROL ROOM
8	B	3	9/A7.5	8/A7.5	–	2	OUTBOUND TOWN COMMUNICATION CLOSET, DOUBLE DOOR
9	–	–	4/A7.5	5/A7.5	6/A7.5		OUTBOUND BRIDGE LEVEL ELEVATOR
10	–	–	4/A7.5	5/A7.5	6/A7.5		INBOUND BRIDGE LEVEL ELEVATOR

NOTE:
1. REFER TO PLAN SHEETS A2.1–A2.4 FOR DOOR LOCATIONS EXCEPT AS NOTED OTHERWISE.

DOOR TYPES

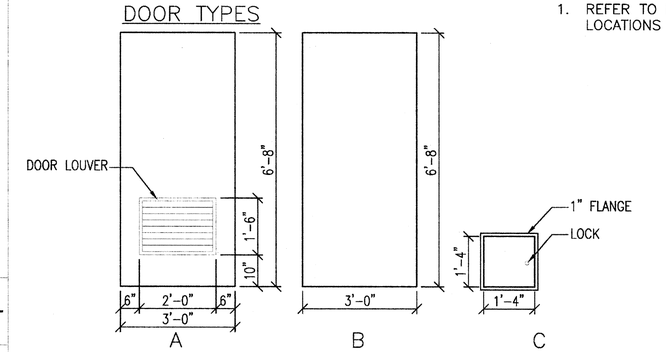

FRAME TYPES

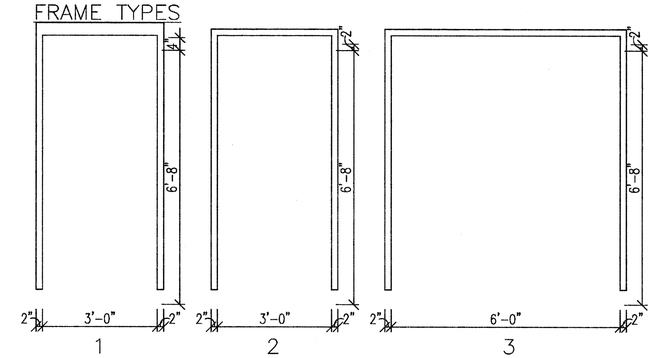

REGISTERED ARCHITECT
MICHAEL A. BASKIN
No. 4453
BOSTON, MA
COMMONWEALTH OF MASSACHUSETTS

MASSACHUSETTS BAY TRANSPORTATION AUTHORITY

FITCHBURG COMMUTER RAIL LINE IMPROVEMENT PROJECT
CONTRACT NO. G67PS01

SOUTH ACTON STATION DOOR SCHEDULE AND DETAILS

ISSUE	DATE	DESCRIPTION	BY	CHKD.	APP.

HNTB
300 APOLLO DRIVE
CHELMSFORD, MA 01824
(978) 905-4000

PROJECT MANAGER 5/30/12 Date

MASSACHUSETTS BAY TRANSPORTATION AUTHORITY
APPROVED BY:
PROJECT MANAGER 6/30/12 Date

Lozano, Baskin, and Associates, Inc.
Architecture•Urban Design•City Planning
205 Mt. Auburn St. Watertown, MA 02472

	DES. BY	DR. BY	CHK. BY
HORIZ: N/A	MB	DW	MB
VERT: N/A	DW		
DATE: 05/17/12			

PLAN NO. 168635
SHEET A-7.7
ISSUE

FILE NAME: C:\Documents and Settings\Mackintosh LBA\local settings\temp\AcPublish_3664\ 06 A-SC0001.dwg
PLOT DATE: May 17, 2012 – 2:47pm

EAST TO BOSTON

WEST TO FITCHBURG

TOWN OF ACTON

STOW STREET

MAPLE STREET

MAPLE STREET

79'-0" TYPE E3

318'-0" TYPE E1

300'-0" TYPE E1

70'-0" TYPE E1

RAILROAD STREET

1 SITE 1:500

LEGEND:

TYPE E1 — MODULE E1 PERIPHERAL

TYPE E2 — MODULE E2 CIRCULATION

TYPE E3 — MODULE E3 ENTRY ZONE

TYPE E4 — MODULE E4 SHRUB

LOAM AND SEED

0 250 500 1000

SCALE: 1:500

N

PROJECT NORTH

COMMONWEALTH OF MASSACHUSETTS — REGISTERED ARCHITECT — MICHAEL A. BASKIN — No.4453 — BOSTON MA

MASSACHUSETTS BAY TRANSPORTATION AUTHORITY

FITCHBURG COMMUTER RAIL LINE
IMPROVEMENT PROJECT
CONTRACT NO. G67PS01

SOUTH ACTON STATION LANDSCAPE PLAN

ISSUE	DATE	DESCRIPTION	BY	CHKD.	APP.

HNTB — 300 APOLLO DRIVE, CHELMSFORD, MA 01824, (978) 905-4000

PROJECT MANAGER — Date 5/30/12

MASSACHUSETTS BAY TRANSPORTATION AUTHORITY — APPROVED BY — PROJECT MANAGER — Date 6/30/12

Lozano, Baskin, and Associates, Inc.
Architecture • Urban Design • City Planning
205 Mt. Auburn St. Watertown, MA 02472

HORIZ: N/A
VERT: N/A
DATE: 05/17/12

DES. BY	DR. BY	CHK. BY
MB DW	DW	MB

PLAN NO. 168636

SHEET A-8.1

ISSUE

FILE NAME: C:\Documents and Settings\Mackintosh LBA\local settings\temp\AcPublish_3976\ 07 A-LA0001.dwg
PLOT DATE: May 24, 2012 – 1:57pm

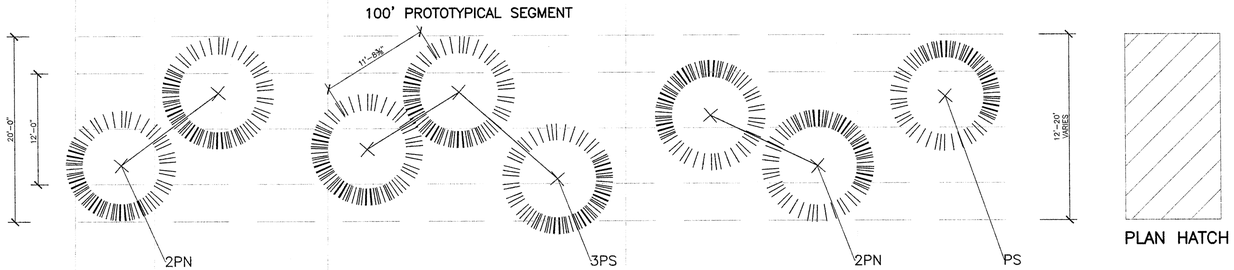

MODULE E1:
PERIPHERAL AREA TREES (A / A-11.2)
NTS

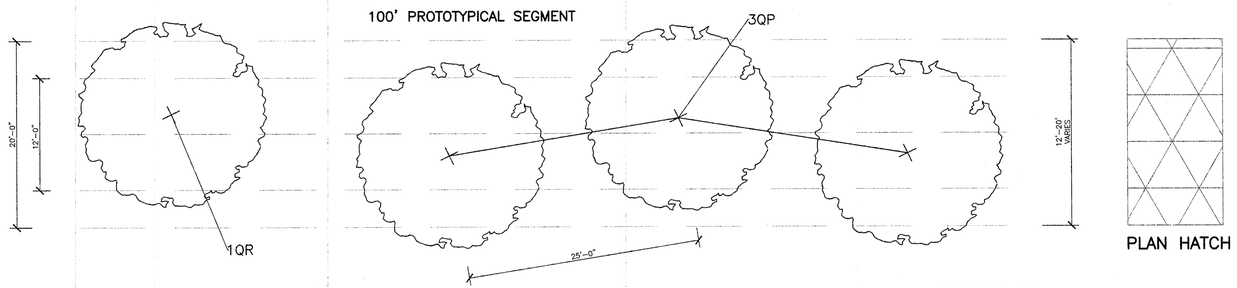

MODULE E2:
GENERAL CIRCULATION TREES (B / A-11.2)
NTS

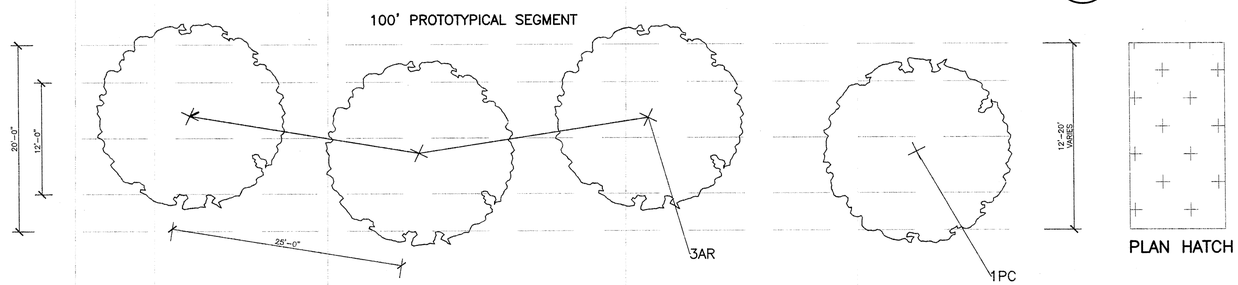

MODULE E3:
STATION ENTRY ZONE TREES (C / A-11.2)
NTS

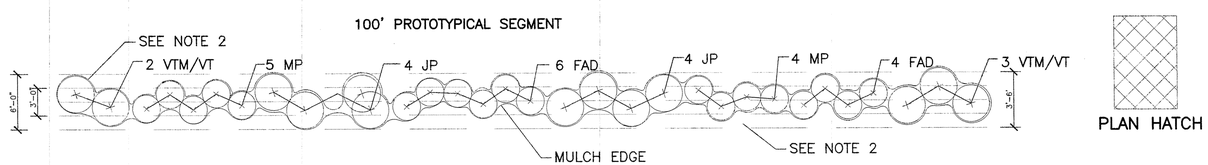

MODULE E4:
SHRUB PLANTING (D / A-11.2)
NTS

LEGEND

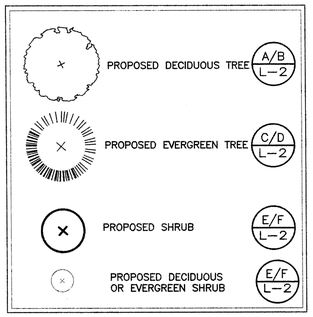

PLANT SCHEDULE

Trees

SYMBOL	QTY	SCIENTIFIC NAME	COMMON NAME	BASE BID SIZE	COMMENTS
AR		Acer rubrum	Red Maple	4" cal.	B&B
PC		Pyrus calleryana	Bradford Pear	4" cal.	B&B
PS		Pinus strobus	White Pine	3"-3 1/2" cal.	B&B
PN		Pinus nigra	Austrian Pine	6' ht.	B&B
TD		Taxus media densiformis	Densiform Yew	2 1/2'-3' Sprd	B&B
QP		Quercus palustris	Pin Oak	1 1/2"-2" cal.	B&B
QR		Quercus rubra	Red Oak	1 1/2"-2" cal.	B&B

PLANT SCHEDULE

Shrubs

SYMBOL	QTY	SCIENTIFIC NAME	COMMON NAME	BASE BID SIZE	SPACING	COMMENTS
FAD		Forsythia x 'Arnold Dwarf'	Arnold Dwarf Fosythia	2' ht.	3' O.C.	CG
JP		Juniperus chinensis 'Pfitzeriana'	Pfitzer Juniper	2' ht.	4' O.C.	CG
MP		Myrica pensylvanica	Northern Bayberry	2' ht.	3' O.C.	CG
VTM		Viburnum plicatum tomentosum 'Mariesi'	Doublefile Viburnum	2' ht.	4' O.C.	CG
VT		Viburnum trilobum	American Cranberrybush	2' ht.	4' O.C.	CG
VC		Vaccinium corymbosum 'Northland'	Highbush Blueberry	2' ht.	3' O.C.	CG

NOTES:
1. PROVIDE 3" OF AGED PINE BARK MULCH AROUND THE BASE OF THE TREE/SHRUB AND LOAM AND SEED DISTURBED AREAS PER MBTA STANDARD SPECIFICATIONS – SECTION 02485.
2. UNDISTURBED AREAS OUTSIDE OF THE MULCH AREA SHALL BE LEFT NATURALLY VEGETATED.
3. PROVIDE LOAM AND SEED AS INDICATED ON DRAWING AND AS REQUIRED BY MBTA STANDARD SPECIFICATIONS – SECTION 02485.
4. AREAS DISTURBED BY CONSTRUCTION SHALL BE LOAMED AND SEEDED AS REQUIRED FOR FINISHED GRADE SLOPES IN ACCORDANCE WITH MBTA STANDARD SPECIFICATIONS – SECTION 02485.
5. SEE A-11.3 FOR PLANTING DETAILS.

PROJECT NORTH

REGISTERED ARCHITECT MICHAEL A. BASKIN No.4453 BOSTON MA COMMONWEALTH OF MASSACHUSETTS

MASSACHUSETTS BAY TRANSPORTATION AUTHORITY

FITCHBURG COMMUTER RAIL LINE
IMPROVEMENT PROJECT
CONTRACT NO. G67PS01

SOUTH ACTON STATION LANDSCAPE MODULES

ISSUE	DATE	DESCRIPTION	BY	CHKD.	APP.

HNTB
300 APOLLO DRIVE
CHELMSFORD, MA 01824
(978) 905-4000

PROJECT MANAGER 5/30/12 Date

MASSACHUSETTS BAY TRANSPORTATION AUTHORITY
APPROVED BY: 6/30/12
PROJECT MANAGER Date

Lozano, Baskin, and Associates, Inc.
Architecture•Urban Design•City Planning
205 Mt. Auburn St. Watertown, MA 02472

HORIZ: N/A
VERT: N/A
DATE: 05/17/12

DES. BY	DR. BY	CHK. BY
MB DW	DW	MB

PLAN NO. 168637
SHEET A-8.2
ISSUE

FILE NAME: C:\Documents and Settings\Mackintosh LBA\Local settings\temp\AcPublish_4052\ 07 A-LA0002.dwg
PLOT DATE: May 25, 2012 – 10:55am

NOTE:
WATERING SAUCER SHALL BE FLOODED TWICE DURING THE FIRST 24 HOURS AFTER PLANTING. DO NOT CUT LEADER. TREE WRAP SHALL NOT BE USED. TREE SHALL BE SET PLUMB.

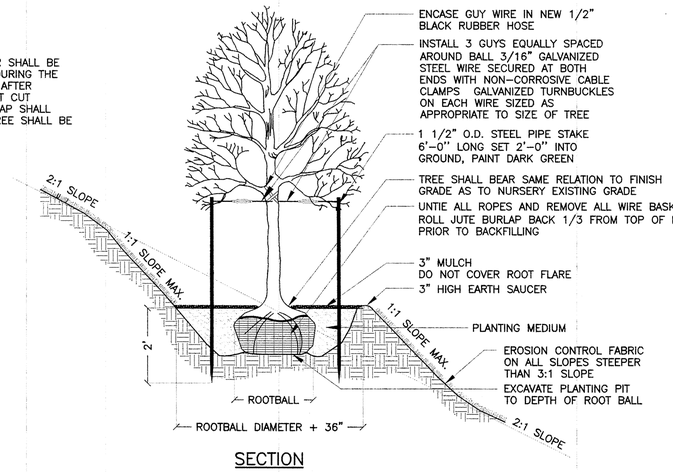

SECTION

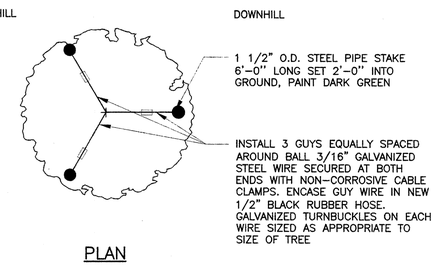

PLAN

DECIDUOUS TREE PLANTING ON A SLOPE

NTS

A
A-11.3

NOTE:
WATERING SAUCER SHALL BE FLOODED TWICE DURING THE FIRST 24 HOURS AFTER PLANTING. DO NOT CUT LEADER. TREE WRAP SHALL NOT BE USED. TREE SHALL BE SET PLUMB.

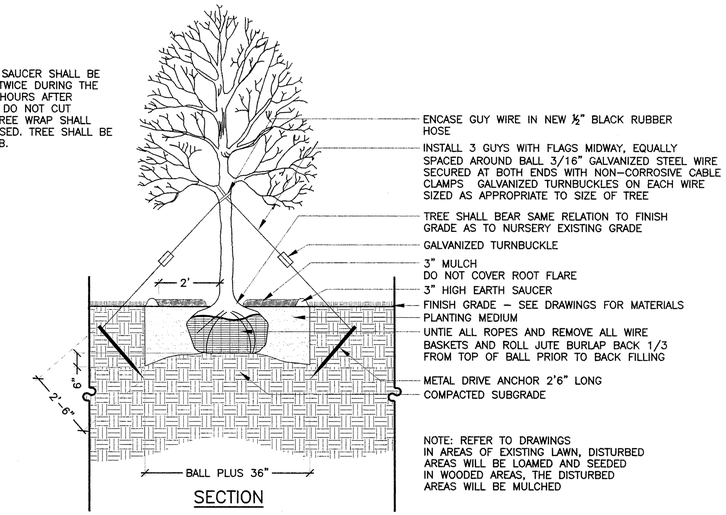

NOTE: REFER TO DRAWINGS IN AREAS OF EXISTING LAWN, DISTURBED AREAS WILL BE LOAMED AND SEEDED IN WOODED AREAS, THE DISTURBED AREAS WILL BE MULCHED

SECTION

DECIDUOUS TREE PLANTING

NTS

B
A-11.3

WATERING SAUCER SHALL BE FLOODED TWICE DURING THE FIRST 24 HOURS AFTER PLANTING DO NOT CUT LEADER TREE WRAP SHALL NOT BE USED TREE SHALL BE SET PLUMB

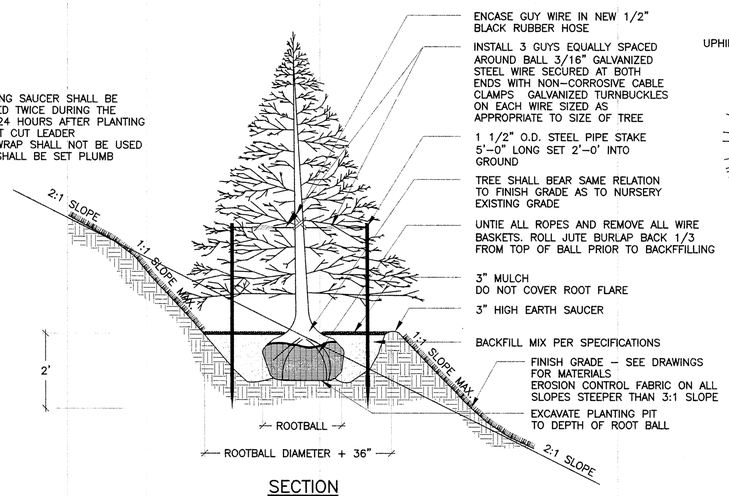

SECTION

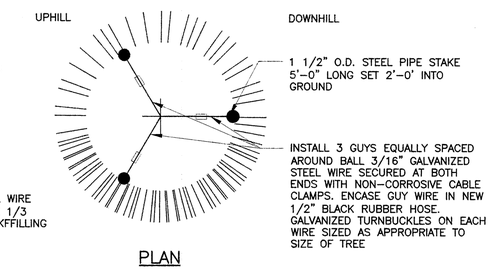

PLAN

EVERGREEN TREE PLANTING ON A SLOPE

NTS

C
A-11.3

NOTE:
WATERING SAUCER SHALL BE FLOODED TWICE DURING THE FIRST 24 HOURS AFTER PLANTING. DO NOT CUT LEADER. TREE WRAP SHALL NOT BE USED. TREE SHALL BE SET PLUMB.

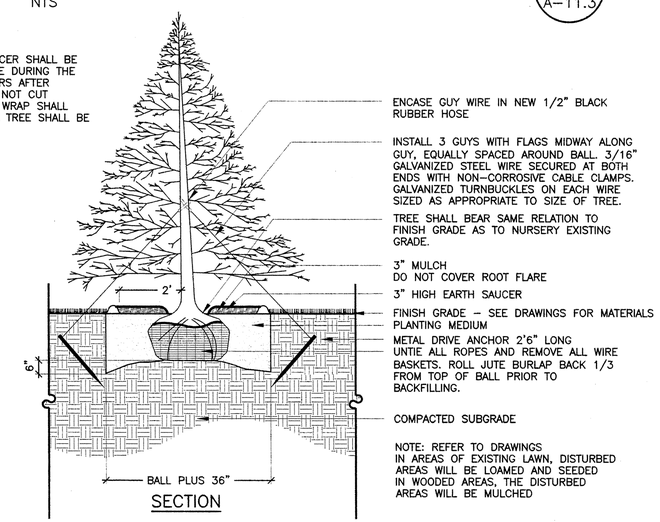

NOTE: REFER TO DRAWINGS IN AREAS OF EXISTING LAWN, DISTURBED AREAS WILL BE LOAMED AND SEEDED IN WOODED AREAS, THE DISTURBED AREAS WILL BE MULCHED

SECTION

EVERGREEN TREE PLANTING

NTS

D
A-11.3

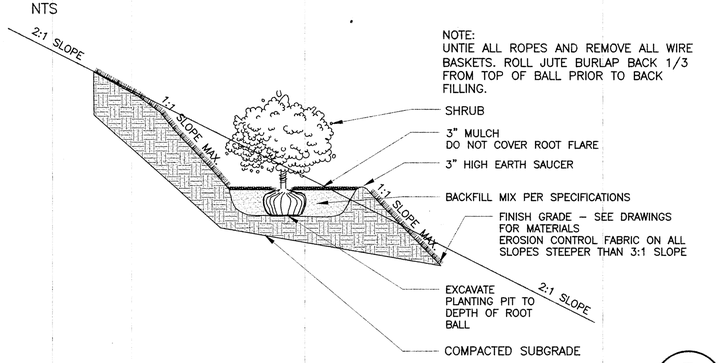

SHRUB PLANTING

NTS

F
A-11.3

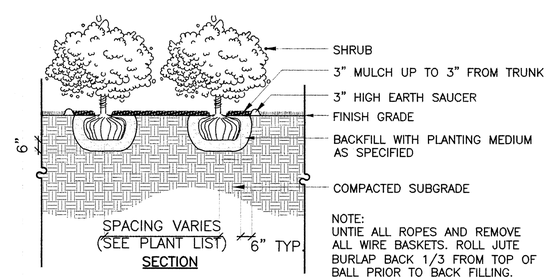

SECTION

NOTE:
UNTIE ALL ROPES AND REMOVE ALL WIRE BASKETS. ROLL JUTE BURLAP BACK 1/3 FROM TOP OF BALL PRIOR TO BACK FILLING.

SHRUB PLANTING

NTS

E
A-11.3

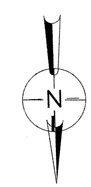

PROJECT NORTH

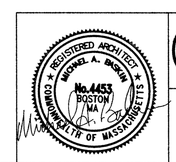

MASSACHUSETTS BAY TRANSPORTATION AUTHORITY

FITCHBURG COMMUTER RAIL LINE
IMPROVEMENT PROJECT
CONTRACT NO. G67PS01

SOUTH ACTON STATION LANDSCAPE DETAILS

ISSUE	DATE	DESCRIPTION	BY	CHKD.	APP.

HNTB
300 APOLLO DRIVE
CHELMSFORD, MA 01824
(978) 905-4000

PROJECT MANAGER — Date 5/30/12

MASSACHUSETTS BAY TRANSPORTATION AUTHORITY
APPROVED BY — PROJECT MANAGER — Date 6/30/12

Lozano, Baskin, and Associates, Inc.
Architecture•Urban Design•City Planning
205 Mt. Auburn St. Watertown, MA 02472

HORIZ: N/A	DES. BY	DR. BY	CHK. BY
VERT: N/A	MB	DW	MB
DATE: 05/17/12	DW		

PLAN NO. 168638
SHEET A-8.3
ISSUE

FILE NAME: C:\Documents and Settings\Mackintosh LBA\local settings\temp\AcPublish_4052\ 07 A-LA0002.dwg
PLOT DATE: May 25, 2012 – 10:55am

GENERAL STATION STRUCTURAL NOTES:

1.0 GENERAL CONDITIONS:

1.1 THE CONTRACTOR SHALL BE RESPONSIBLE FOR FIELD VERIFICATION OF ALL DIMENSIONS, ELEVATIONS, AND GENERAL CONDITIONS WITH REGARD TO EXISTING AND PROPOSED STRUCTURES AND UTILITIES.

1.2 THE CONTRACTOR SHALL EXAMINE THE CONTRACT DOCUMENTS TO VERIFY AND COORDINATE DIMENSIONS AND LOCATIONS OF ITEMS OF ARCHITECTURAL, ELECTRICAL, MECHANICAL AND CIVIL DISCIPLINES WHICH MAY NOT BE SHOWN ON STRUCTURAL DRAWINGS. ANY DISCREPANCIES SHALL BE BROUGHT TO THE ATTENTION OF THE ENGINEER PRIOR TO COMMENCING WORK.

1.3 PLATFORM EDGES SHALL BE SET AT 4'-0" ABOVE TOP OF RAIL VERTICALLY AND 5'-7" HORIZONTALLY (FACE OF TIMBER RUBBING STRIP) FROM ℄ OF PROPOSED TRACKS (TANGENT TRACK SELECTIONS ONLY). FOR AREAS OF CURVED TRACK SEE SHEET S-103. IF EXISTING FIELD CONDITIONS VARY FROM THOSE SHOWN ON THE PLANS THEN ANY DISCREPANCY SHOULD BE BROUGHT TO THE ATTENTION OF THE ENGINEER PRIOR TO COMMENCING WORK.

1.4 DESIGN AND CONSTRUCTION OF ALL WORK SHALL CONFORM TO THE MOST CURRENT EDITIONS OF THE FOLLOWING:

- MBTA STANDARD SPECIFICATIONS INCLUDING SPECIAL PROVISIONS
- MASSACHUSETTS STATE BUILDING CODE
- ACI-318 - BUILDING CODE REQUIREMENTS FOR STRUCTURAL CONCRETE
- ACI-530 - BUILDING CODE REQUIREMENTS FOR MASONRY STRUCTURES
- AISC STEEL CONSTRUCTION MANUAL
- PCI DESIGN HANDBOOK
- ASCE 7 - MINIMUM DESIGN LOADS FOR BUILDINGS AND OTHER STRUCTURES
- STRUCTURAL WELDING CODE AWS D1.1
- AREMA - MANUAL FOR RAILWAY ENGINEERING

IN CASE OF CONFLICT BETWEEN THE CODES, STANDARD REGULATIONS, SPECIFICATIONS, GENERAL NOTES AND/OR MANUFACTURERS' REQUIREMENTS, USE THE MOST STRINGENT PROVISIONS.

1.5 FOR ANY CONSTRUCTION CONDITION OR CONSTRUCTION LOADS WHICH EXCEED THE INDICATED DESIGN LOADS, THE CONTRACTOR SHALL ENGAGE A LICENSED STRUCTURAL ENGINEER REGISTERED IN THE COMMONWEALTH OF MASSACHUSETTS TO VERIFY STRUCTURAL CAPACITY.

1.6 FOR SIGNAGE, COMMUNICATIONS, AND LIGHTING DETAILS, REFER TO ARCHITECTURAL AND ELECTRICAL DRAWINGS.

1.7 ENGINEER'S REVIEW OF SHOP DRAWINGS IS FOR GENERAL CONFORMANCE WITH THE DESIGN CONCEPT AND DOES NOT RELIEVE THE CONTRACTOR FROM HIS RESPONSIBILITY TO COMPLY WITH THE REQUIREMENTS OF THE CONTRACT DOCUMENTS.

2.0 DESIGN REQUIREMENTS:

2.1 DEAD LOADS:
THE DESIGN IS BASED UPON THE FOLLOWING UNIT WEIGHT OF THE MATERIALS:

REGULAR WEIGHT CONCRETE	150 PCF
COMPACTED SAND AND GRAVEL AND/ OR	125 PCF
EARTH FILL BALLAST	120 PCF

2.2 GROUND SNOW LOAD OF 55 PSF BASED ON MASSACHUSETTS BUILDING CODE FOR SOUTH ACTON (TABLE 1604.11).

2.3 BASIC WIND SPEED OF 100 MPH BASED ON REQUIREMENTS OF MASSACHUSETTS BUILDING CODE FOR DESIGN OF STATION ELEMENTS (TABLE 1604.11).

2.4 STATION PLATFORMS, HEAD HOUSES, AND PEDESTRIAN BRIDGE ARE DESIGNED FOR A LIVE LOAD OF 100 PSF. STATION STAIRS ARE DESIGNED FOR A LIVE LOAD OF 100 PSF OR A CONCENTRATED LOAD OF 300 LBS. OVER FOUR SQUARE INCHES OF THREAD, WHICHEVER PRODUCES GREATER STRESSES.

2.5 EARTHQUAKE DESIGN: (TABLE 1614.11)
EARTHQUAKE SPECTRAL RESPONSE ACCELERATION AT ONE SECOND, $S_1 = 0.071$
EARTHQUAKE SPECTRAL RESPONSE ACCELERATION AT SHORT PERIODS, $S_S = 0.29$

2.6 METAL DECK AND ROOF MEMBERS SHALL BE DESIGNED USING A SNOW LOAD DEFLECTION LIMIT OF L/240. FLOOR MEMBERS SHALL BE DESIGNED USING A LIVE LOAD DEFLECTION LIMIT OF L/360.

3.0 SITEWORK / FOUNDATION:

3.1 CONTRACTOR SHALL PERFORM A PRE-CONSTRUCTION SURVEY OF THE ADJACENT TRACK AND STATION STRUCTURES PRIOR TO MINIPILE INSTALLATION.

3.2 DRILLED MINIPILES SHALL BE INSTALLED AS SHOWN ON THE PLANS AND IN ACCORDANCE WITH THE SPECIFICATIONS, THE MASSACHUSETTS STATE BUILDING CODE, AND ALL OTHER APPLICABLE LOCAL, STATE AND FEDERAL CODES AND REQUIREMENTS.

3.3 THE CONTRACTOR SHALL PERFORM ADDITIONAL SUBSURFACE INVESTIGATIONS CONSIDERED NECESSARY TO COMPLETE ALL FOUNDATION WORK. SEE GEOTECHNICAL SHEETS FOR EXISTING BORING LOGS.

3.4 THE ENGINEER SHALL INSPECT THE PROPOSED BOTTOM OF FOOTING ELEVATION AND WHERE UNSUITABLE MATERIALS ARE PRESENT SHALL DIRECT THE CONTRACTOR TO OVER EXCAVATE IN ORDER TO EXPOSE SUITABLE BEARING MATERIAL. CONTRACTOR SHALL BACKFILL TO PROPOSED BOTTOM OF FOOTING WITH GRAVEL BORROW.

4.0 CAST-IN-PLACE CONCRETE:

4.1 CONCRETE CLASS: HIGH PERFORMANCE 4000 PSI AT 28 DAYS WITH ¾" AGGREGATE.

4.2 ALL REINFORCING STEEL TO BE ASTM A615 GRADE 60 EPOXY COATED.

4.3 MINIMUM CLEAR CONCRETE PROTECTION FOR REINFORCING UNLESS OTHERWISE NOTED:

CONCRETE CAST AGAINST EARTH:	3"
CONCRETE BACKFILLED WITH EARTH:	2"
CONCRETE EXPOSED TO WEATHER:	2"

4.4 REINFORCING STEEL SPLICE AND EMBEDMENT LENGTHS, UNLESS OTHERWISE INDICATED:

	MIN. EMBEDMENT LENGTH, IN.		MIN. LAP SPLICE, IN.	
BAR SIZE	TOP BARS	OTHER BARS	TOP BARS	OTHER BARS
4	25	22	32	28
5	31	27	40	35
6	37	33	48	42
7	43	38	56	49
8	49	43	63	56
9	55	49	71	63
10	66	58	86	76
11	81	72	105	93

4.5 CONCRETE WORK SHALL BE COORDINATED WITH ALL UTILITIES, STRUCTURAL STEEL AND ELECTRICAL WORK. THE CONTRACTOR SHALL VERIFY INSTALLATION AND LOCATIONS OF ALL INSERTS, ANCHOR BOLTS, DOWELS, BLOCKOUTS, SLEEVES, AND EMBEDDED CONDUIT PRIOR TO CONCRETE PLACEMENT.

4.6 PROVIDE ¾" x ¾" CHAMFER ON ALL EXPOSED VERTICAL AND HORIZONTAL CORNERS, UNLESS OTHERWISE NOTED.

4.7 WELDED WIRE REINFORCEMENT SHALL BE GRADE 60 AND CONFORM TO ASTM A185 ("STANDARD SPECIFICATION FOR STEEL WELDED WIRE REINFORCEMENT, PLAIN, FOR CONCRETE").

4.8 ALL SUB-GRADE CONCRETE SHALL BE COATED WITH BITUMINOUS DAMP-PROOFING CONFORMING TO SECTION 07115 OF THE CONTRACT SPECIFICATIONS. ALL OTHER CONCRETE SURFACES SHALL BE TREATED WITH A PENETRATING CONCRETE SEALER CONFORMING TO SECTION 03370 OF THE CONTRACT SPECIFICATIONS WITH EXCEPTION TO WALKWAY SURFACES.

5.0 PRECAST CONCRETE PLATFORMS:

5.1 CONCRETE SHALL BE SILICA FUME MODIFIED WITH 5000 PSI AT 28 DAYS WITH ¾" MAX. AGGREGATE. CEMENT SHALL BE TYPE II PORTLAND CEMENT ONLY.

5.2 ALL REINFORCING STEEL TO BE ASTM A615 GRADE 60 EPOXY COATED.

5.3 PROVIDE 1½" MINIMUM CLEAR CONCRETE PROTECTION FOR REINFORCING UNLESS OTHERWISE NOTED.

5.4 AFTER INSTALLATION, JOINTS BETWEEN PANELS SHALL BE FILLED WITH SEALANT AND POLYURETHANE FOAM.

5.5 PLATFORM GEOMETRY TOLERANCES:

THE MAXIMUM DEVIATION BETWEEN LONGITUDINAL TOP EDGES OF ADJACENT PLATFORM PANELS MEASURED FROM THE WORKING POINT LINE SHALL NOT BE MORE THAN ⅛" MAXIMUM IN ANY DIRECTION.

ADJACENT TOP SURFACE EDGES OF THE PLATFORM PANELS ARE TO BE BUILT FLUSH, THE MAXIMUM ALLOWABLE VERTICAL DIFFERENCE IN ELEVATION BETWEEN THE TOP EDGE SURFACES OF ADJACENT PLATFORM PANELS SHALL NOT EXCEED ⅛".

ADJACENT PLATFORM PANEL EDGES FACING THE TRACK ARE TO BE BUILT FLUSH, MAXIMUM ALLOWABLE HORIZONTAL DIFFERENCE BETWEEN THE FACES OF ANY TWO ADJACENT PLATFORM PANELS SHALL NOT EXCEED ⅛".

6.0 STRUCTURAL STEEL:

6.1 STRUCTURAL STEEL MATERIAL AND WELDING REQUIREMENTS:

A. W SHAPES	ASTM A992, GRADE 50
CHANNELS AND ANGLES	ASTM A572, GRADE 50
PLATES AND BARS	ASTM A572, GRADE 50
ANCHOR BOLTS AND RODS	ASTM F1554
HIGH STRENGTH BOLTS	ASTM A325
NUTS	ASTM A563
WASHERS	ASTM F436
STRUCTURAL TUBES (SQUARE OR RECTANGULAR HSS)	ASTM A500, GRADE B, Fy=46 KSI
B. WELDING	AWS D1.1, E-70XX ELECTRODES.

6.2 ALL STRUCTURAL STEEL SHALL BE ARCHITECTURAL EXPOSED STRUCTURAL STEEL (AESS) AS DEFINED BY AISC, STEEL CONSTRUCTION MANUAL, LATEST EDITION.

6.3 SHOP CONNECTIONS SHALL BE WELDED, UNLESS OTHERWISE NOTED.

6.4 FIELD CONNECTIONS SHALL BE BOLTED USING MINIMUM ⅝" DIAMETER BOLTS, UNLESS NOTED OTHERWISE.

6.5 ALL STRUCTURAL STEEL SHALL BE HOT DIP GALVANIZED THEN PAINTED UNLESS OTHERWISE NOTED. GALVANIZING SHALL BE PERFORMED AFTER COMPLETION OF SHOP FABRICATION. ALL CLIPS, ANGLES, BRACKETS, PLATES, ETC. SHOWN IN ARCHITECTURAL DRAWINGS FOR CONNECTION OF ARCHITECTURAL ELEMENTS TO STEEL FRAMING SHALL BE WELDED TO STEEL FRAMING PRIOR TO GALVANIZING.

6.6 NO FIELD WELDING OF RAILINGS, CANOPY OR OTHER MISCELLANEOUS METALS SHALL BE PERMITTED EXCEPT AT STEEL GUTTER CHANNEL SPLICES (SEE STEEL DETAIL SHEETS).

6.7 ALL SHOP AND FIELD CONNECTIONS SHALL DEVELOP THE FULL STRENGTH OF THE MEMBERS TO BE CONNECTED UNLESS SPECIFICALLY SHOWN OTHERWISE ON THE DRAWINGS. ALL WELDING SHALL BE PERFORMED BY CERTIFIED WELDERS APPROVED BY THE STATE OF MASSACHUSETTS AND SHALL CONFORM TO AWS D1.1.

6.8 ALL BOLTED CONNECTIONS SHALL CONFORM TO AISC SPECIFICATION FOR STRUCTURAL JOINTS USING ASTM A325 OR A490 BOLTS, 2004 EDITION. BOLTS SHALL BE INSTALLED USING THE "SNUG TIGHT" METHOD AS PRESCRIBED IN SECTION 8 OF THE SPECIFICATION FOR BEARING TYPE CONNECTIONS.

7.0 METAL ROOF PANELS:

7.1 STEEL ROOF DECK SHALL BE GALVANIZED IN ACCORDANCE WITH ASTM A653.

7.2 ROOF DECK FOR CANOPIES, PEDESTRIAN BRIDGE AND HEAD HOUSES SHALL BE 18 GAGE, 1½" DEEP, WIDE-RIBBED ROOF PANELS WITH A MINIMUM SECTION MODULUS (S) OF 0.293 CUBIC INCHES PER FOOT. ROOF DECK PANELS SHALL BE FORMED FROM FLAT ROLLED CARBON STEEL SHEETS OF STRUCTURAL QUALITY WITH A MINIMUM YIELD POINT OF 33,000 PSI. INTERLOCKING OR OVERLAPPING SIDE LAP REQUIRED.

7.3 RIDGE AND VALLEY PLATES, CANT STRIPS, AND OTHER METAL ROOF ELEMENTS, WHICH MUST BE ATTACHED DIRECTLY TO THE STEEL PLATES IN ORDER TO PROVIDE A FINISHED SURFACE FOR THE APPLICATION OF ROOFING, SHALL BE FURNISHED BY THE ROOF DECK MANUFACTURER.

8.0 COATING:

8.1 ALL STRUCTURAL STEEL, CONNECTIONS, BOLTS, ANCHOR BOLTS AND HARDWARE SHALL BE HOT DIP GALVANIZED UNLESS OTHERWISE NOTED.

8.2 DO NOT COAT:
A. FAYING SURFACES OF CONNECTIONS USING A325 BOLTS
B. SURFACES TO BE WELDED

8.3 SEE ARCHITECTURAL DRAWINGS AND SPECIFICATION FOR OTHER COATING REQUIREMENTS.

8.4 ALL STRUCTURAL STEEL SHALL BE PAINTED BLACK. COMPLY WITH THE REQUIREMENTS OF SPECIFICATION SECTION 09910-SHOP PAINTING OF HOT DIPPED GALVANIZED STEEL.

CONTINUED:

COMMONWEALTH OF MASSACHUSETTS
GREGORY T. STEFANO
STRUCTURAL
No. 36726
REGISTERED PROFESSIONAL ENGINEER
5/18/2012

ISSUE	DATE	DESCRIPTION	BY	CHKD.	APP.

MASSACHUSETTS BAY TRANSPORTATION AUTHORITY

FITCHBURG COMMUTER RAIL LINE
IMPROVEMENT PROJECT
CONTRACT NO. G67CN01

SOUTH ACTON STATION
GENERAL STRUCTURAL NOTES
SHEET 1

HNTB
300 APOLLO DRIVE
CHELMSFORD, MA 01824
(978) 905-4000

PROJECT MANAGER 5/30/12 Date

MASSACHUSETTS BAY TRANSPORTATION AUTHORITY
APPROVED BY:
PROJECT MANAGER 6/30/12 Date

JACOBS
343 CONGRESS STREET
BOSTON, MA 02110
(617) 242-9222

HORIZ: N/A	DES. BY	DR. BY	CHK. BY	PLAN NO. 168640	ISSUE
VERT: N/A	JAG/DJM	JAG/DJM	MWT		
DATE: 5/17/12				SHEET S-100	

FILE NAME: P:\MBTA\2008\E2X37800\CAD\700CADD\702STATIONS\South Acton\Structural\PS&E Submission\ 100-101_Struc_Notes.dwg
PLOT DATE: May 18, 2012 - 8:23am

CONTINUED:

9.0 MASONRY:

9.1 CONCRETE BLOCK SHALL CONFORM TO ASTM C90 FOR GRADE N UNITS (NORMAL WEIGHT) AND HAVE A MINIMUM UNIT COMPRESSIVE STRENGTH OF 1,900 P.S.I.

9.2 MORTAR SHALL BE 1 PART PORTLAND CEMENT (ASTM C150), ½ PART LIME PUTTY (HYDRATED LIME (ASTM C141) OR QUICK LIME (ASTM C51) AND 4 ½ PARTS SAND (ASTM C144) BY VOLUME. COLOR AS TO BE SELECTED BY THE ENGINEER FROM MANUFACTURER'S STANDARD PRODUCTS.

9.3 GROUT FOR REINFORCED CONCRETE BLOCK MASONRY SHALL CONFORM TO ASTM C476 (FINE GROUT) AND SHALL HAVE A MINIMUM COMPRESSIVE STRENGTH OF 2,500 P.S.I. AFTER 28 DAYS.

9.4 REINFORCING STEEL SHALL CONFORM TO ASTM A615, GRADE 60.

9.5 PROVIDE NON-METALLIC POSITIONERS THAT PREVENT DISPLACEMENT OF REINFORCING DURING CONSTRUCTION.

9.6 HORIZONTAL JOINT REINFORCEMENT: FACTORY-FABRICATED, TRUSS TYPE W9 GA. OR HEAVIER WIRE CONFORMING TO ASTM A82.

9.7 GROUT SHALL BE PLACED IN MAXIMUM LIFT HEIGHTS OF 4'-0".

9.8 CONTRACTOR SHALL NOT OVERLAY MASONRY IN FREEZING WEATHER UNLESS SUITABLE MEANS ARE PROVIDED TO HEAT MATERIALS. PROTECT WORK FROM COLD AND FROST TO ENSURE THAT MORTAR WILL SET TO STRENGTH WITHOUT FREEZING. NO CHLORIDE ANTIFREEZE INGREDIENT SHALL BE USED.

10.0 PRECAST CONCRETE STAIR PANELS:

10.1 PRECAST CONCRETE STAIR PANELS SHALL BE THE DESIGN RESPONSIBILITY OF THE CONTRACTOR. PANELS SHALL BE DESIGNED FOR BOTH DEAD AND LIVE LOADS ACTING CONCURRENTLY ON THE SLAB. DEAD LOAD SHALL CONSIST OF THE CONCRETE SELF-WEIGHT PLUS 20 PSF FOR RAILINGS AND MISCELLANEOUS ITEMS. LIVE LOAD SHALL BE 100 PSF, OR 300 POUNDS ON AN AREA OF 4 SQUARE INCHES, WHICHEVER PRODUCES THE GREATEST LOAD EFFECT.

10.2 CONCRETE CLASS: HP 5000 PSI AT 28 DAYS WITH ¾" AGGREGATE.

10.3 CONTRACTOR SHALL SUBMIT SHOP DRAWINGS AND CALCULATIONS FOR PRECAST CONCRETE STAIR PANELS. DRAWINGS SHALL INCLUDE ATTACHMENT DETAILS TO STEEL FRAMING AND MASONRY WALLS. SHOP DRAWINGS AND CALCULATIONS SHALL BE SUBMITTED ACCORDING TO THE REQUIREMENTS OUTLINED IN THE SPECIFICATIONS AND BE STAMPED BY A PROFESSIONAL ENGINEER REGISTERED IN THE STATE OF MASSACHUSETTS.

10.4 STAIR CONNECTIONS SHALL NOT IMPOSE ECCENTRIC OR TORSIONAL LOADING ON THE STEEL FRAMING AND MASONRY WALLS.

COMMONWEALTH OF MASSACHUSETTS
GREGORY T. STEFANO
STRUCTURAL
No. 36726
REGISTERED PROFESSIONAL ENGINEER
5/18/2012

MASSACHUSETTS BAY TRANSPORTATION AUTHORITY

FITCHBURG COMMUTER RAIL LINE
IMPROVEMENT PROJECT
CONTRACT NO. G67CN01

SOUTH ACTON STATION
GENERAL STRUCTURAL NOTES
SHEET 2

ISSUE	DATE	DESCRIPTION	BY	CHKD.	APP.

HNTB
300 APOLLO DRIVE
CHELMSFORD, MA 01824
(978) 905-4000

PROJECT MANAGER 5/20/12 Date

MASSACHUSETTS BAY TRANSPORTATION AUTHORITY
APPROVED BY:
PROJECT MANAGER 6/30/12 Date

JACOBS
343 CONGRESS STREET
BOSTON, MA 02110
(617) 242-9222

HORIZ: N/A
VERT: N/A
DATE: 5/17/12

DES. BY	DR. BY	CHK. BY
JAG/DJM	JAG/DJM	MWT

PLAN NO. 168641
SHEET S-101
ISSUE

FILE NAME: P:\MBTA\2008\E2X37800\CAD\700CADD\702STATIONS\South Acton\Structural\PS&E Submission\ 100-101_Struc_Notes.dwg
PLOT DATE: May 18, 2012 – 8:23am

EAST TO BOSTON

WEST TO FITCHBURG

TOWN OF SOUTH ACTON

N

STOW STREET

MAPLE STREET

MAPLE STREET

PROPOSED INBOUND PLATFORM DROP-OFF AREA

PROPOSED INBOUND PLATFORM ACCESS STRUCTURE FROM MAPLE STREET

℄ INBOUND TRACK 2 AND CONSTRUCTION ℄

PROPOSED INBOUND HEAD HOUSE

PROPOSED EGRESS STAIRS (TYP.)

PROPOSED INBOUND PLATFORM

PROPOSED HALF CANOPY

EXISTING UNDERGROUND UTILITY

PROPOSED HALF CANOPIES

PROPOSED PEDESTRIAN BRIDGE

PROPOSED INBOUND EGRESS WALKWAY

1329+00 1330+00 1331+00 1332+00 1333+00 1334+00 1335+00 1336+00 1337+00 1338+00 1339+00 1340+00

℄ OUTBOUND TRACK 1

EXISTING PARKING AREA

PROPOSED FULL CANOPY

EXISTING UNDERGROUND UTILITIES

PROPOSED OUTBOUND PLATFORM ACCESS RAMP FROM RAILROAD STREET

PROPOSED OUTBOUND PLATFORM

EXISTING INBOUND/OUTBOUND PLATFORM DROP-OFF AREA

PROPOSED OUTBOUND HEAD HOUSE

PROPOSED OUTBOUND EGRESS WALKWAY

EXISTING PARKING AREA

MAIN STREET

RAILROAD STREET

PLAN

SCALE: 1" = 40'

NOTES:

1. FOR GENERAL NOTES, SEE SHEETS S-100 AND S-101.

HORIZ. 40 0 40 80

(SCALE IN FEET)

ISSUE	DATE	DESCRIPTION	BY	CHKD.	APP.

COMMONWEALTH OF MASSACHUSETTS
GREGORY T. STEFANO
STRUCTURAL No. 36726
REGISTERED PROFESSIONAL ENGINEER
5/18/2012

MASSACHUSETTS BAY TRANSPORTATION AUTHORITY

FITCHBURG COMMUTER RAIL LINE IMPROVEMENT PROJECT
CONTRACT NO. G67CN01

SOUTH ACTON STATION
KEY PLAN

HNTB
300 APOLLO DRIVE
CHELMSFORD, MA 01824
(978) 905-4000

PROJECT MANAGER 5/30/12 Date

MASSACHUSETTS BAY TRANSPORTATION AUTHORITY
APPROVED BY:
PROJECT MANAGER 6/30/12 Date

JACOBS
343 CONGRESS STREET
BOSTON, MA 02110
(617) 242-9222

	DES. BY	DR. BY	CHK. BY
HORIZ: N/A	JAG	JAG	MWT
VERT: N/A			
DATE: 5/17/12			

PLAN NO. 168642

SHEET S-102

ISSUE

FILE NAME: P:\MBTA\2008\E2X37800\CAD\700CADD\702STATIONS\South Acton\Structural\PS&E Submission\ 102_Key_Plan.dwg
PLOT DATE: May 18, 2012 – 8:23am

EAST TO BOSTON

WEST TO FITCHBURG

TOWN OF SOUTH ACTON

NOTES:

1. FOR GENERAL STRUCTURAL NOTES, SEE SHEETS S-100 AND S-101.
2. FOR PLATFORM LAYOUT PLANS, SEE SHEETS S-106 THROUGH S-108.
3. FOR MINIPILE AND PIER CAP DETAILS, SEE SHEETS S-109 THROUGH S-111.
4. FOR PRECAST PANEL DETAILS, SEE SHEETS S-112 THROUGH S-115.
5. FOR EXISTING AND PROPOSED SITE UTILITIES SEE UTILITY, CIVIL, AND ELECTRICAL SHEETS.

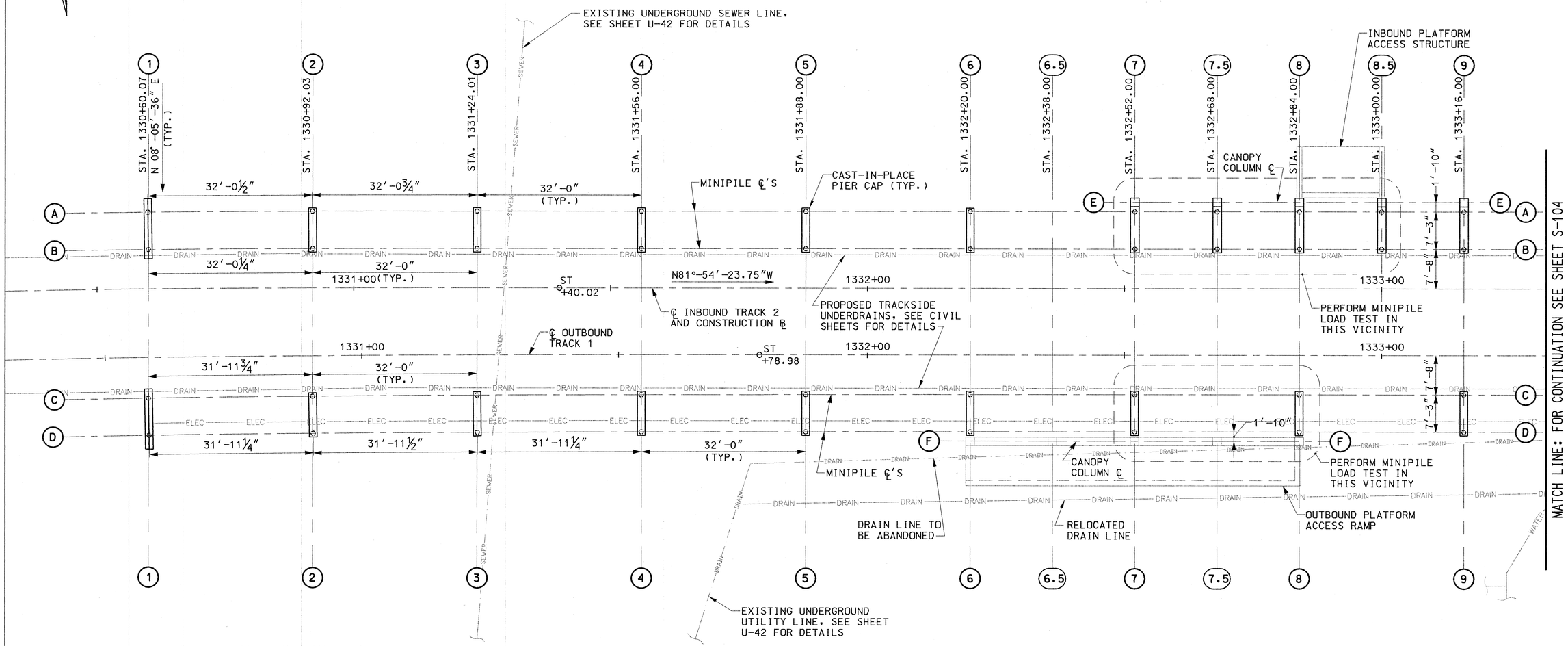

MINIPILE LOCATION TABLE

NOTE: THE FOLLOWING MINIPILES DO NOT LIE ON COLUMN LINE INTERSECTIONS.

MINIPILE	NORTHING	EASTING
1-A	668186.1555	2992681.0533
2-A	668154.4007	2992685.2874
1-D	668192.0524	2992724.0732
2-D	668160.3321	2992728.1089
3-D	668128.6689	2992732.3647

FOUNDATION PLAN

SCALE: 1" = 10'-0"

HORIZ. 10 0 10 20

(SCALE IN FEET)

COMMONWEALTH OF MASSACHUSETTS — GREGORY T. STEFANO — STRUCTURAL No. 36726 — REGISTERED PROFESSIONAL ENGINEER — 5/18/2012

MASSACHUSETTS BAY TRANSPORTATION AUTHORITY

FITCHBURG COMMUTER RAIL LINE IMPROVEMENT PROJECT CONTRACT NO. G67CN01

SOUTH ACTON STATION FOUNDATION PLAN SHEET 1

ISSUE	DATE	DESCRIPTION	BY	CHKD.	APP.

JACOBS — 343 CONGRESS STREET BOSTON, MA 02110 (617) 242-9222

HNTB — 300 APOLLO DRIVE CHELMSFORD, MA 01824 (978) 905-4000 — PROJECT MANAGER — Date 5/30/12

MASSACHUSETTS BAY TRANSPORTATION AUTHORITY — APPROVED BY: PROJECT MANAGER — Date 6/30/12

HORIZ: N/A	DES. BY	DR. BY	CHK. BY	PLAN NO. 168643	ISSUE
VERT: N/A	JAG	JAG	MWT		
DATE: 5/17/12				SHEET S-103	

FILE NAME: P:\MBTA\2008\EZX37800\CAD\700CADD\702STATIONS\South Acton\Structural\PS&E Submission\ 103-105_Found_Layout.dwg
PLOT DATE: May 18, 2012 – 8:23am

NOTES:

1. FOR GENERAL STRUCTURAL NOTES, SEE SHEETS S-100 AND S-101.
2. FOR PLATFORM LAYOUT PLANS, SEE SHEETS S-106 THROUGH S-108.
3. FOR MINIPILE AND PIER CAP DETAILS, SEE SHEETS S-109 THROUGH S-111.
4. FOR PRECAST PANEL DETAILS, SEE SHEETS S-112 THROUGH S-115.
5. FOR EXISTING AND PROPOSED SITE UTILITIES SEE UTILITY, CIVIL, AND ELECTRICAL SHEETS.

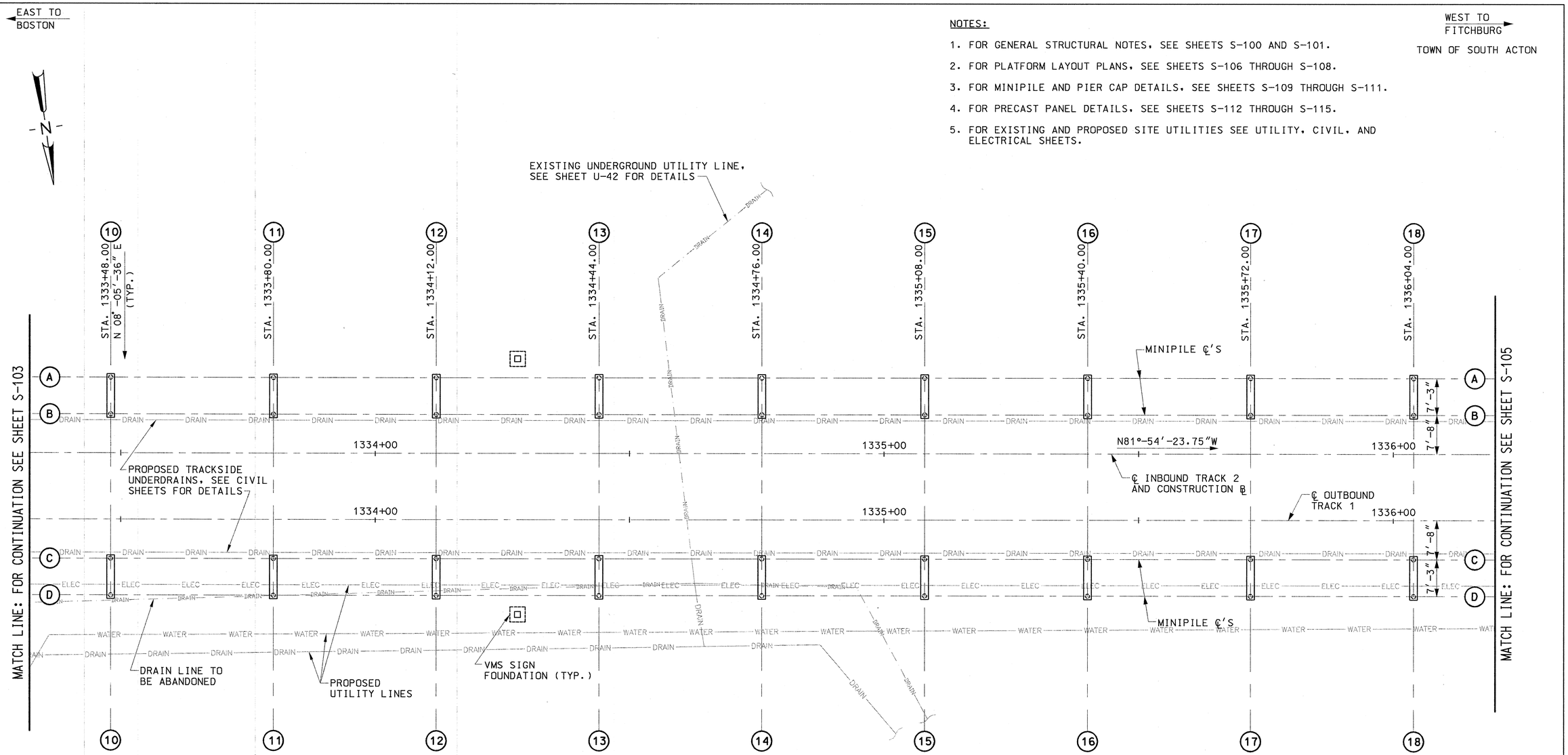

FOUNDATION PLAN
SCALE: 1" = 10'-0"

HORIZ. 10 0 10 20
(SCALE IN FEET)

COMMONWEALTH OF MASSACHUSETTS
GREGORY T. STEFANO
STRUCTURAL
No. 36726
REGISTERED PROFESSIONAL ENGINEER
5/18/2012

ISSUE	DATE	DESCRIPTION	BY	CHKD.	APP.

JACOBS 343 CONGRESS STREET BOSTON, MA 02110 (617) 242-9222

HNTB 300 APOLLO DRIVE CHELMSFORD, MA 01824 (978) 805-4000

PROJECT MANAGER 5/20/12 Date

MASSACHUSETTS BAY TRANSPORTATION AUTHORITY
APPROVED BY: PROJECT MANAGER 6/30/12 Date

MASSACHUSETTS BAY TRANSPORTATION AUTHORITY

FITCHBURG COMMUTER RAIL LINE
IMPROVEMENT PROJECT
CONTRACT NO. G67CN01

SOUTH ACTON STATION FOUNDATION PLAN SHEET 2

	DES. BY	DR. BY	CHK. BY		
HORIZ: N/A	JAG	JAG	MWT	PLAN NO. 168644	ISSUE
VERT: N/A					
DATE: 5/17/12				SHEET S-104	

FILE NAME: P:\MBTA\2008\E2X37800\CAD\700CADD\702STATIONS\South Acton\Structural\PS&E Submission\ 103-105_Found_Layout.dwg
PLOT DATE: May 18, 2012 - 8:23am

EAST TO BOSTON

WEST TO FITCHBURG

TOWN OF SOUTH ACTON

NOTES:

1. FOR GENERAL STRUCTURAL NOTES, SEE SHEETS S-100 AND S-101.
2. FOR PLATFORM LAYOUT PLANS, SEE SHEETS S-106 THROUGH S-108.
3. FOR MINIPILE AND PIER CAP DETAILS, SEE SHEETS S-109 THROUGH S-111.
4. FOR PRECAST PANEL DETAILS, SEE SHEETS S-112 THROUGH S-115.
5. FOR EXISTING AND PROPOSED SITE UTILITIES SEE UTILITY, CIVIL, AND ELECTRICAL SHEETS.

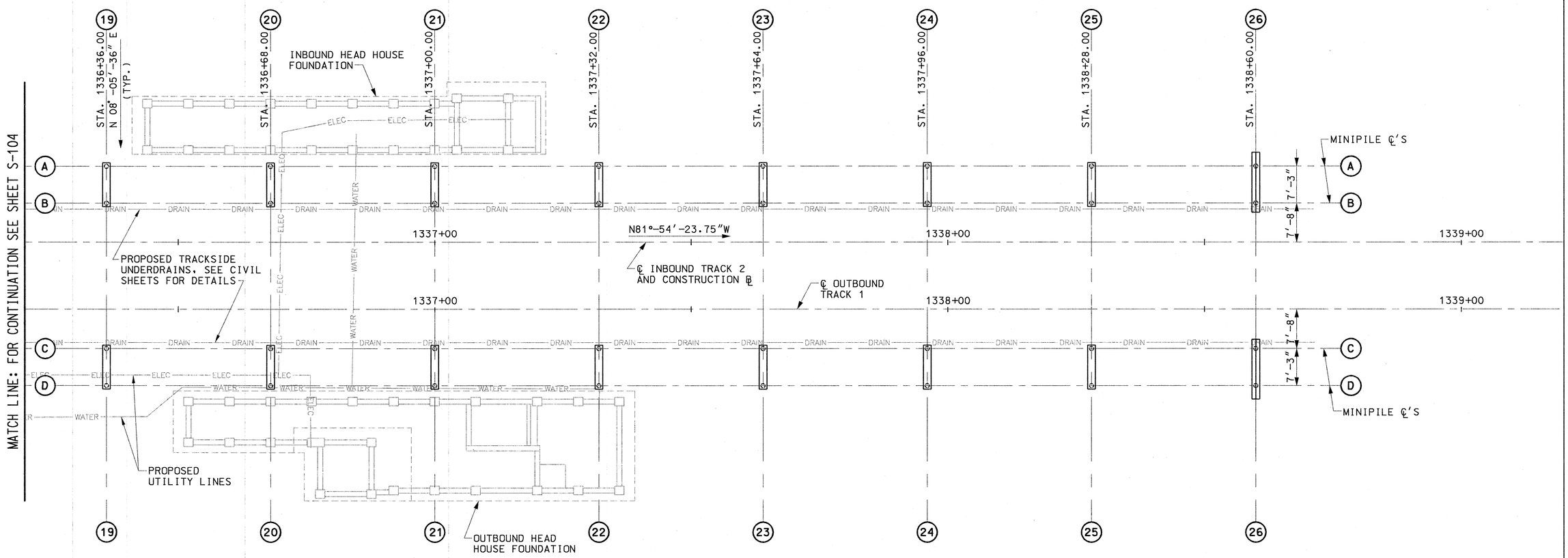

FOUNDATION PLAN

SCALE: 1" = 10'-0"

HORIZ. 10 0 10 20

(SCALE IN FEET)

COMMONWEALTH OF MASSACHUSETTS
GREGORY T. STEFANO
STRUCTURAL
No. 36726
REGISTERED PROFESSIONAL ENGINEER
5/18/2012

MASSACHUSETTS BAY TRANSPORTATION AUTHORITY

FITCHBURG COMMUTER RAIL LINE
IMPROVEMENT PROJECT
CONTRACT NO. G67CN01

SOUTH ACTON STATION
FOUNDATION PLAN
SHEET 3

ISSUE	DATE	DESCRIPTION	BY	CHKD.	APP.

HNTB
300 APOLLO DRIVE
CHELMSFORD, MA 01824
(978) 905-4000

PROJECT MANAGER 5/30/12 Date

MASSACHUSETTS BAY TRANSPORTATION AUTHORITY
APPROVED BY
PROJECT MANAGER 6/30/12 Date

JACOBS
343 CONGRESS STREET
BOSTON, MA 02110
(617) 242-9222

	DES. BY	DR. BY	CHK. BY
HORIZ: N/A	JAG	JAG	MWT
VERT: N/A			
DATE: 5/17/12			

PLAN NO. 168145

SHEET S-105

ISSUE

FILE NAME: P:\MBTA\2008\E2X37800\CAD\700CADD\702STATIONS\South Acton\Structural\PS&E Submission\ 103-105_Found_Layout.dwg
PLOT DATE: May 18, 2012 - 8:23am

NOTES:

1. FOR GENERAL STRUCTURAL NOTES, SEE SHEETS S-100 AND S-101.
2. FOR FOUNDATION LAYOUT PLANS, SEE SHEETS S-103 THROUGH S-105.
3. FOR MINIPILE AND PIER CAP DETAILS, SEE SHEETS S-109 THROUGH S-111.
4. FOR PRECAST PANEL DETAILS, SEE SHEETS S-112 THROUGH S-115.
5. FOR ADDITIONAL DETAILS SEE ARCHITECTURAL AND ELECTRICAL PLANS.
6. PROPOSED ELEVATIONS SHOWN ARE FOR REFERENCE ONLY. PLATFORM EDGE SHALL BE SET AT 4'-0" ABOVE TOP OF TRACK.

LEGEND:

A - PANEL TYPE LABEL

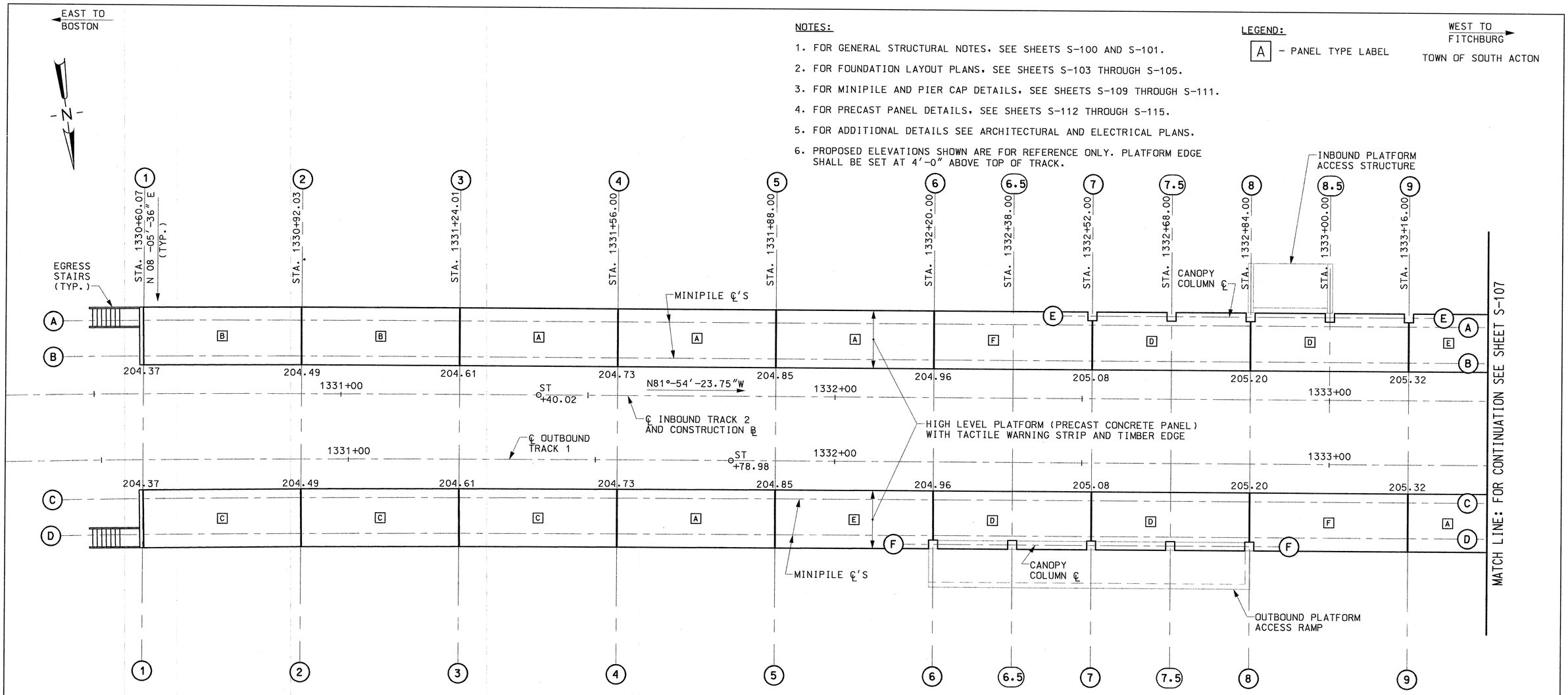

PLATFORM LAYOUT PLAN

SCALE: 1" = 10'-0"

PRECAST PANEL OFFSET TABLE

COLUMN LINE	STATION	℄ TRACK TO EDGE OF INBOUND PANEL	℄ TRACK TO EDGE OF OUTBOUND PANEL
1	1330+60.07	5'-10½" LT.	19'-5 9/16" RT.
2	1330+92.03	5'-10½" LT.	19'-3¼" RT.
3	1331+24.01	5'-10½" LT.	19'-1¼" RT.
4	1331+56.00	5'-10½" LT.	18'-11 15/16" RT.
5	1331+88.00	5'-10½" LT.	18'-11⅜" RT.
6	1332+20.00	5'-10½" LT.	18'-10⅞" RT.
7	1332+52.00	5'-10½" LT.	18'-10½" RT.
8	1332+84.00	5'-10½" LT.	18'-10½" RT.
9	1333+16.00	5'-10½" LT.	18'-10½" RT.

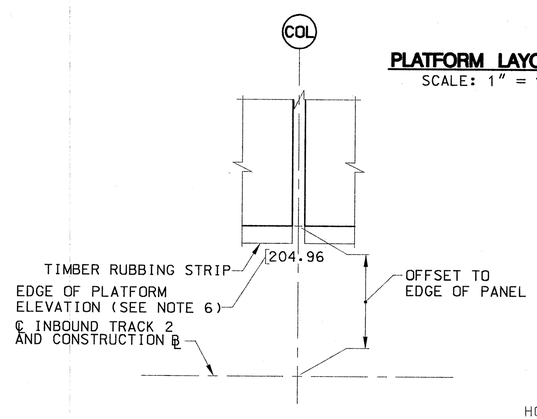

PRECAST PANEL DIMENSIONING DETAIL

NOT TO SCALE

HORIZ. 10 0 10 20

(SCALE IN FEET)

COMMONWEALTH OF MASSACHUSETTS
GREGORY T. STEFANO
STRUCTURAL
No. 36726
REGISTERED PROFESSIONAL ENGINEER
5/18/2012

MASSACHUSETTS BAY TRANSPORTATION AUTHORITY

FITCHBURG COMMUTER RAIL LINE IMPROVEMENT PROJECT
CONTRACT NO. G67CN01

SOUTH ACTON STATION
PLATFORM LAYOUT PLAN
SHEET 1

ISSUE	DATE	DESCRIPTION	BY	CHKD.	APP.

HNTB 300 APOLLO DRIVE CHELMSFORD, MA 01824 (978) 905-4000

PROJECT MANAGER 5/18/12 Date

MASSACHUSETTS BAY TRANSPORTATION AUTHORITY

APPROVED BY: PROJECT MANAGER 6/29/12 Date

JACOBS 343 CONGRESS STREET BOSTON, MA 02110 (617) 242-9222

HORIZ: N/A	DES. BY	DR. BY	CHK. BY	PLAN NO. 168646	ISSUE
VERT: N/A	JAG	JAG	MWT		
DATE: 5/17/12				SHEET S-106	

FILE NAME: P:\MBTA\2008\E2X37800\CAD\700CADD\702STATIONS\South Acton\Structural\PS&E Submission\ 106-108_Plat_Layout.dwg
PLOT DATE: May 18, 2012 - 8:23am

EAST TO BOSTON

WEST TO FITCHBURG

TOWN OF SOUTH ACTON

NOTES:

1. FOR GENERAL STRUCTURAL NOTES, SEE SHEETS S-100 AND S-101.
2. FOR FOUNDATION LAYOUT PLANS, SEE SHEETS S-103 THROUGH S-105.
3. FOR MINIPILE AND PIER CAP DETAILS, SEE SHEETS S-109 THROUGH S-111.
4. FOR PRECAST PANEL DETAILS, SEE SHEETS S-112 THROUGH S-115.
5. FOR ADDITIONAL DETAILS SEE ARCHITECTURAL AND ELECTRICAL PLANS.
6. PROPOSED ELEVATIONS SHOWN ARE FOR REFERENCE ONLY. PLATFORM EDGE SHALL BE SET AT 4'-0" ABOVE TOP OF TRACK.

LEGEND:

A - PANEL TYPE LABEL

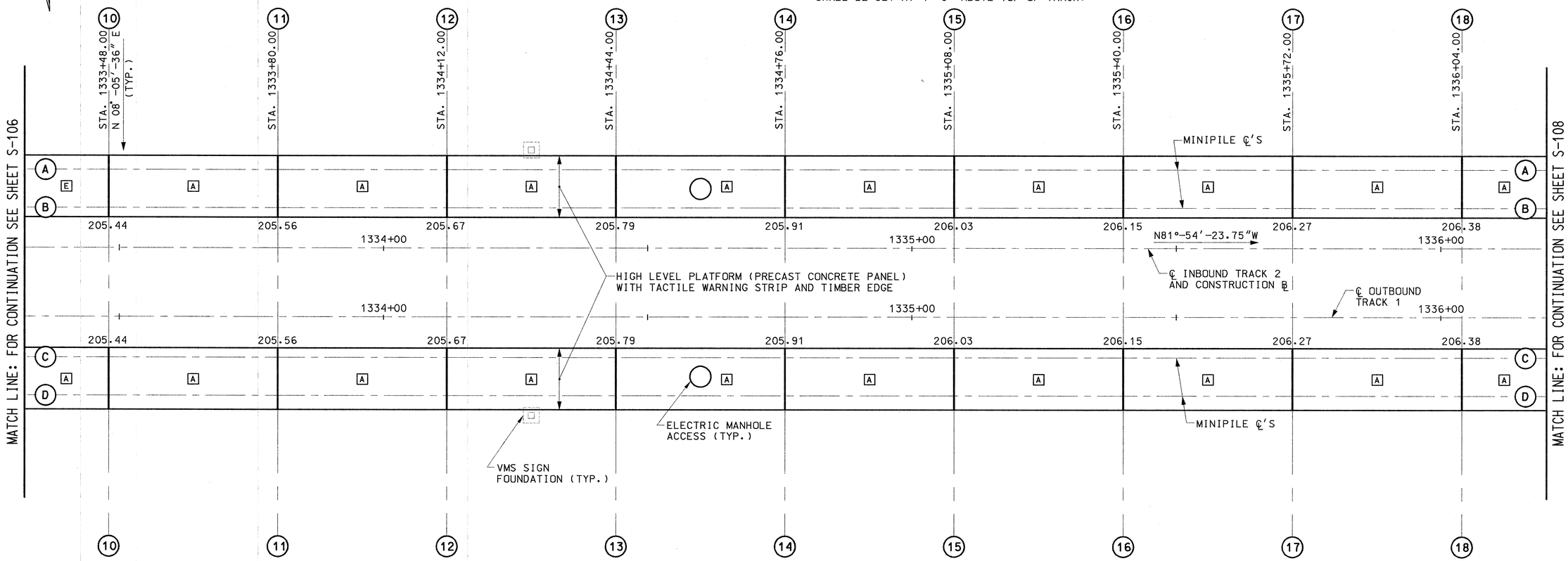

PRECAST PANEL OFFSET TABLE

COLUMN LINE	STATION	℄ TRACK TO EDGE OF INBOUND PANEL	℄ TRACK TO EDGE OF OUTBOUND PANEL
10	1333+48.00	5'-10½" LT.	18'-10½" RT.
11	1333+80.00	5'-10½" LT.	18'-10½" RT.
12	1334+12.00	5'-10½" LT.	18'-10½" RT.
13	1334+44.00	5'-10½" LT.	18'-10½" RT.
14	1337+76.00	5'-10½" LT.	18'-10½" RT.
15	1335+08.00	5'-10½" LT.	18'-10½" RT.
16	1335+40.00	5'-10½" LT.	18'-10½" RT.
17	1335+72.00	5'-10½" LT.	18'-10½" RT.
18	1336+04.00	5'-10½" LT.	18'-10½" RT.

PLATFORM LAYOUT PLAN

SCALE: 1" = 10'-0"

HORIZ. 10 0 10 20

(SCALE IN FEET)

COMMONWEALTH OF MASSACHUSETTS
GREGORY T. STEFANO
STRUCTURAL
No. 36726
REGISTERED PROFESSIONAL ENGINEER
5/18/2012

MASSACHUSETTS BAY TRANSPORTATION AUTHORITY

FITCHBURG COMMUTER RAIL LINE
IMPROVEMENT PROJECT
CONTRACT NO. G67CN01

SOUTH ACTON STATION
PLATFORM LAYOUT PLAN
SHEET 2

ISSUE	DATE	DESCRIPTION	BY	CHKD.	APP.

HNTB
300 APOLLO DRIVE
CHELMSFORD, MA 01824
(978) 905-4000

PROJECT MANAGER 5/30/12 Date

MASSACHUSETTS BAY TRANSPORTATION AUTHORITY
APPROVED BY:
PROJECT MANAGER 6/30/12 Date

JACOBS
343 CONGRESS STREET
BOSTON, MA 02110
(617) 242-9222

	DES. BY	DR. BY	CHK. BY
HORIZ: N/A	JAG	JAG	MWT
VERT: N/A			
DATE: 5/17/12			

PLAN NO. 168647

SHEET S-107

ISSUE

FILE NAME: P:\MBTA\2008\E2X3780\CAD\700CADD\702STATIONS\South Acton\Structural\PS&E Submission\ 106-108_Plot_Layout.dwg
PLOT DATE: May 18, 2012 - 8:23am

NOTES:

1. FOR GENERAL STRUCTURAL NOTES, SEE SHEETS S-100 AND S-101.
2. FOR FOUNDATION LAYOUT PLANS, SEE SHEETS S-103 THROUGH S-105.
3. FOR MINIPILE AND PIER CAP DETAILS, SEE SHEETS S-109 THROUGH S-111.
4. FOR PRECAST PANEL DETAILS, SEE SHEETS S-112 THROUGH S-115.
5. FOR ADDITIONAL DETAILS SEE ARCHITECTURAL AND ELECTRICAL PLANS.
6. PROPOSED ELEVATIONS SHOWN ARE FOR REFERENCE ONLY. PLATFORM EDGE SHALL BE SET AT 4'-0" ABOVE TOP OF TRACK.

LEGEND:

A - PANEL TYPE LABEL

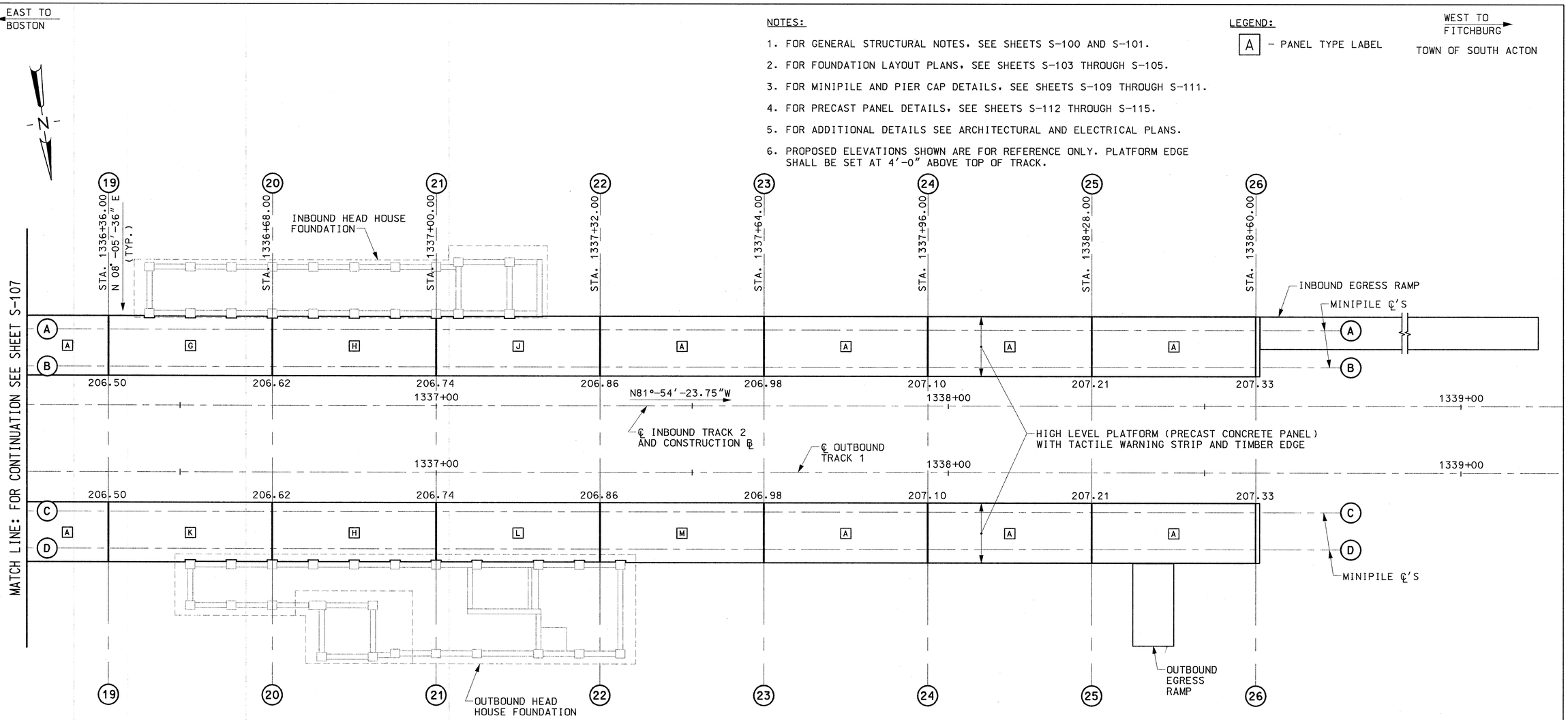

PRECAST PANEL OFFSET TABLE

COLUMN LINE	STATION	℄TRACK TO EDGE OF INBOUND PANEL	℄TRACK TO EDGE OF OUTBOUND PANEL
19	1336+36.00	5'-10½" LT.	18'-10½" RT.
20	1336+68.00	5'-10½" LT.	18'-10½" RT.
21	1337+00.00	5'-10½" LT.	18'-10½" RT.
22	1337+32.00	5'-10½" LT.	18'-10½" RT.
23	1337+64.00	5'-10½" LT.	18'-10½" RT.
24	1337+96.00	5'-10½" LT.	18'-10½" RT.
25	1338+28.00	5'-10½" LT.	18'-10½" RT.
26	1338+60.00	5'-10½" LT.	18'-10½" RT.

PLATFORM LAYOUT PLAN

SCALE: 1" = 10'-0"

HORIZ. 10 0 10 20

(SCALE IN FEET)

COMMONWEALTH OF MASSACHUSETTS
GREGORY T. STEFANO
STRUCTURAL
No. 36726
REGISTERED PROFESSIONAL ENGINEER
5/18/2012

MASSACHUSETTS BAY TRANSPORTATION AUTHORITY

FITCHBURG COMMUTER RAIL LINE
IMPROVEMENT PROJECT
CONTRACT NO. G67CN01

SOUTH ACTON STATION
PLATFORM LAYOUT PLAN
SHEET 3

ISSUE	DATE	DESCRIPTION	BY	CHKD.	APP.

HNTB
300 APOLLO DRIVE
CHELMSFORD, MA 01824
(978) 905-4000

PROJECT MANAGER Date 5/30/12

MASSACHUSETTS BAY TRANSPORTATION AUTHORITY
APPROVED BY:
PROJECT MANAGER Date 6/30/12

JACOBS
343 CONGRESS STREET
BOSTON, MA 02110
(617) 242-9222

HORIZ: N/A
VERT: N/A
DATE: 5/17/12

DES. BY	DR. BY	CHK. BY
JAG	JAG	MWT

PLAN NO. 168648
SHEET S-108
ISSUE

FILE NAME: P:\MBTA\2008\E2X37800\CAD\700CADD\702STATIONS\South Acton\Structural\PS&E Submission\ 106-108_Plat_Layout.dwg
PLOT DATE: May 18, 2012 - 8:23am

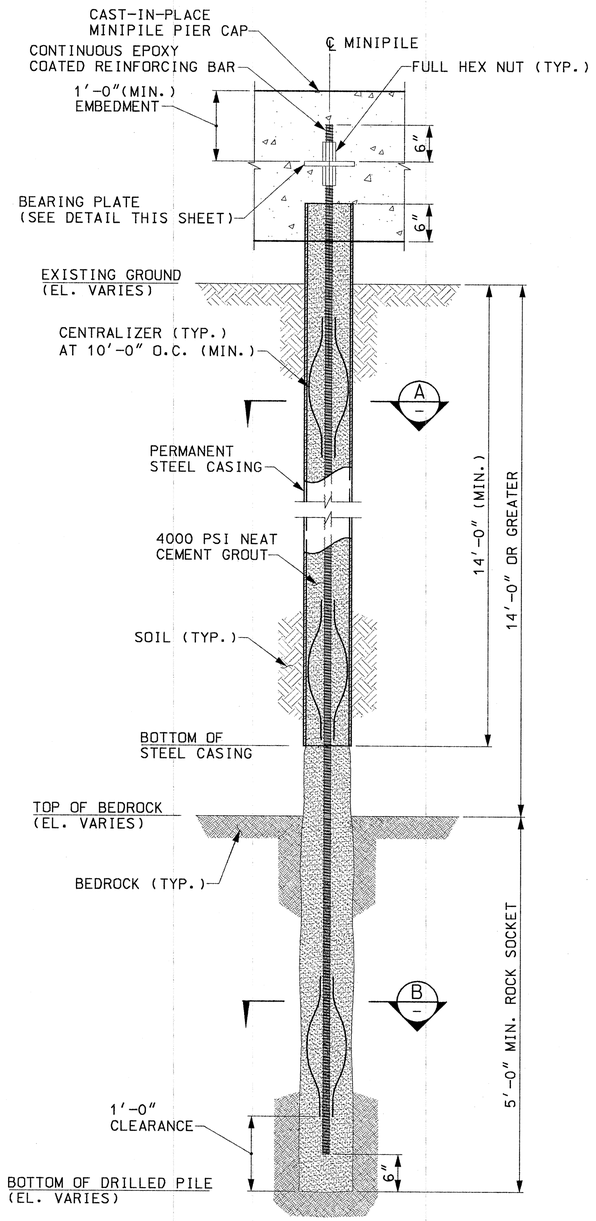

DRILLED MINIPILE ELEVATION DETAIL FOR BEDROCK DEPTHS OF > 14'-0"

SCALE: 1" = 1'-0"

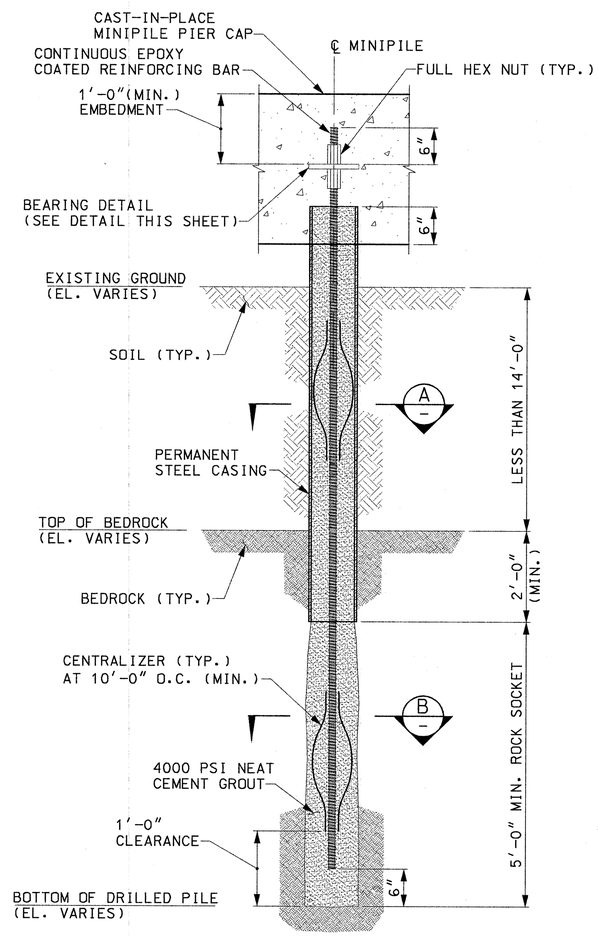

DRILLED MINIPILE ELEVATION DETAIL FOR BEDROCK DEPTHS OF < 14'-0"

SCALE: 1" = 1'-0"

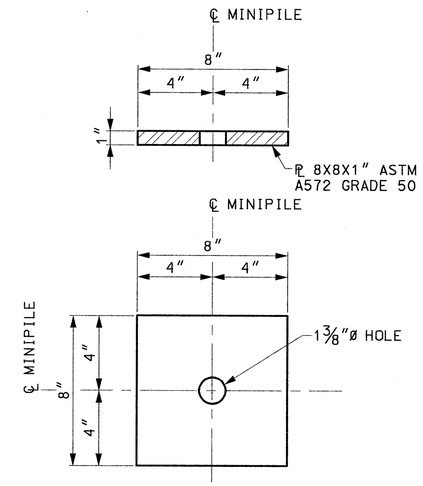

BEARING PLATE DETAIL

SCALE: 3" = 1'-0"

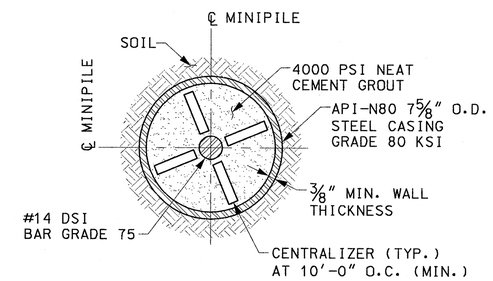

SECTION A

SCALE: 3" = 1'-0"

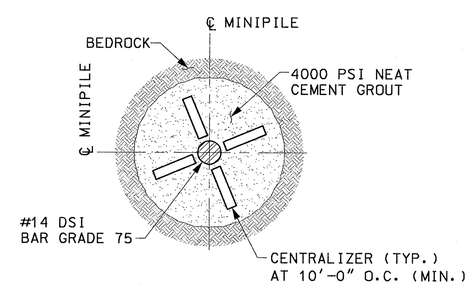

SECTION B

SCALE: 3" = 1'-0"

NOTES:

1. FOR GENERAL STRUCTURAL NOTES, SEE SHEETS S-100 AND S-101.
2. FOR COMPLETE PILE LOAD TEST PROCEDURE, SEE DESIGN SPECIFICATIONS.
3. DL = 105 KIPS.

SACRIFICIAL TEST LOADING SCHEDULE (TEST PILE)

LOAD	HOLD TIME
0.05 DL MAX. (AL)	UNTIL MOVEMENT STABILIZES
0.25 DL	UNTIL MOVEMENT STABILIZES
0.50 DL	UNTIL MOVEMENT STABILIZES
0.75 DL	UNTIL MOVEMENT STABILIZES
1.00 DL	UNTIL MOVEMENT STABILIZES
1.25 DL	UNTIL MOVEMENT STABILIZES
1.50 DL	UNTIL MOVEMENT STABILIZES
1.75 DL	UNTIL MOVEMENT STABILIZES
2.00 DL (MAX. TEST LOAD)	CREEP TEST (SEE NOTE 2)
1.75 DL	15 MINUTES
1.50 DL	15 MINUTES
1.25 DL	15 MINUTES
1.00 DL	15 MINUTES
0.75 DL	15 MINUTES
0.50 DL	15 MINUTES
0.25 DL	15 MINUTES
0	UNTIL MOVEMENT STABILIZES

PROOF TEST LOADING SCHEDULE (PRODUCTION PILE)

LOAD	HOLD TIME
0.05 DL MAX. (AL)	UNTIL MOVEMENT STABILIZES
0.25 DL	UNTIL MOVEMENT STABILIZES
0.50 DL	UNTIL MOVEMENT STABILIZES
0.75 DL	UNTIL MOVEMENT STABILIZES
1.00 DL	UNTIL MOVEMENT STABILIZES
1.25 DL	UNTIL MOVEMENT STABILIZES
1.33 DL (MAX. TEST LOAD)	CREEP TEST (SEE NOTE 2)
1.25 DL	15 MINUTES
1.00 DL	15 MINUTES
0.75 DL	15 MINUTES
0.50 DL	15 MINUTES
0.25 DL	15 MINUTES
0	UNTIL MOVEMENT STABILIZES

COMMONWEALTH OF MASSACHUSETTS — GREGORY T. STEFANO — STRUCTURAL No. 36726 — REGISTERED PROFESSIONAL ENGINEER — 5/18/2012

MASSACHUSETTS BAY TRANSPORTATION AUTHORITY

FITCHBURG COMMUTER RAIL LINE IMPROVEMENT PROJECT CONTRACT NO. G67CN01

SOUTH ACTON STATION MINIPILE DETAILS

ISSUE	DATE	DESCRIPTION	BY	CHK'D.	APP.

HNTB — 300 APOLLO DRIVE CHELMSFORD, MA 01824 (978) 905-4000 — PROJECT MANAGER — Date 5/30/12

MASSACHUSETTS BAY TRANSPORTATION AUTHORITY — APPROVED BY: PROJECT MANAGER — Date 6/30/12

JACOBS — 343 CONGRESS STREET BOSTON, MA 02110 (617) 242-8222

HORIZ: N/A	DES. BY	DR. BY	CHK. BY	PLAN NO. 168649	ISSUE
VERT: N/A	AS	JAG	MWT		
DATE: 5/17/12				SHEET S-109	

FILE NAME: P:\MBTA\2008\E2X37800\CAD\700CADD\702STATIONS\South Acton\Structural\PS&E Submission\ 109-111_Minipiles_PierCap_Dets.dwg
PLOT DATE: May 18, 2012 - 8:23am

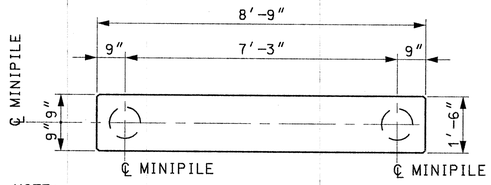

NOTE:
PRECAST CONCRETE PLATFORM ABOVE NOT SHOWN FOR CLARITY.

PLAN

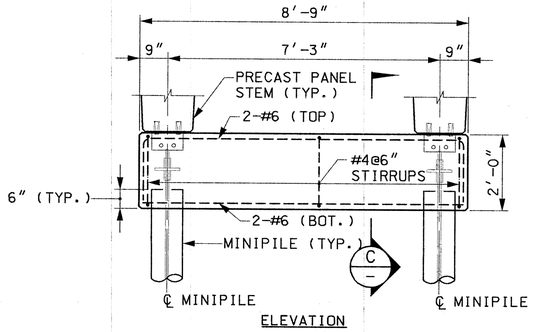

ELEVATION

TYPICAL INTERMEDIATE PIER CAP

SCALE: 1/2" = 1'-0"

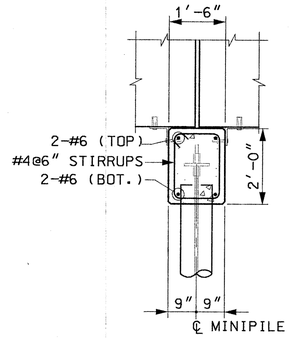

SECTION C

SCALE: 1/2" = 1'-0"

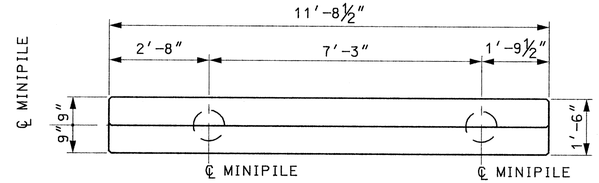

NOTE:
PRECAST CONCRETE PLATFORM ABOVE NOT SHOWN FOR CLARITY.

PLAN

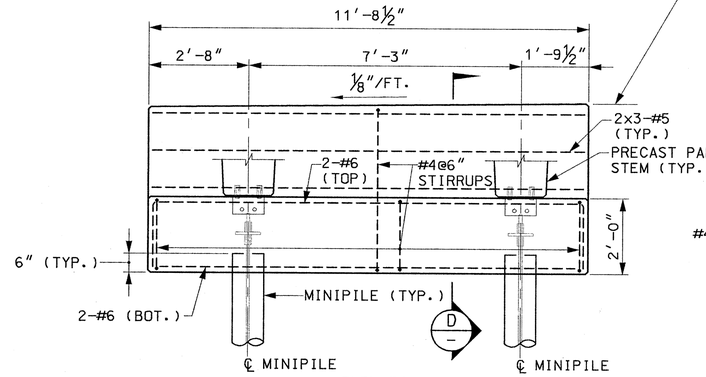

ELEVATION

NOTE:
INBOUND COLUMN LINE 26 AND OUTBOUND COLUMN LINE 1 SHOWN.

TYPICAL END PIER CAP

SCALE: 1/2" = 1'-0"

EL. 204.37 COL. LINE 1 INBOUND
EL. 204.37 COL. LINE 1 OUTBOUND
EL. 207.33 COL. LINE 26 INBOUND
EL. 207.33 COL. LINE 26 OUTBOUND

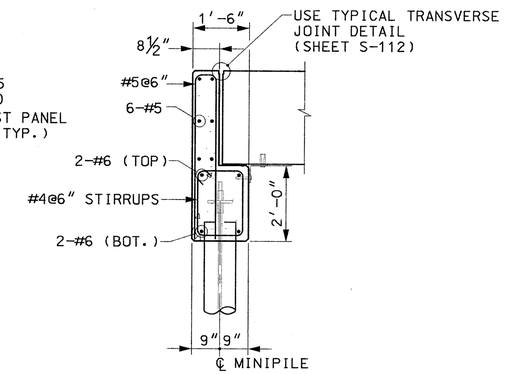

SECTION D

SCALE: 1/2" = 1'-0"

NOTES:

1. FOR GENERAL STRUCTURAL NOTES, SEE SHEETS S-100 AND S-101.
2. FOR MINIPILE DETAILS, SEE SHEET S-109.
3. FOR PLATFORM ANCHORAGE DETAILS, SEE SHEET S-115.
4. BOTTOM FACE OF MINIPILE PIER CAPS SHALL BE FORMED. CASTING AGAINST EARTH WILL NOT BE PERMITTED.
5. SET TOP OF PIER CAP SUCH THAT THE ADDITION OF THE PLATFORM PANEL AND BEARING PAD IS EQUAL TO 4'-0" ABOVE T.O.R. AT THE PLATFORM EDGE.
6. SURFACES OF PIER CAPS WHICH WILL BE BACKFILLED AGAINST SHALL BE TREATED WITH BITUMINOUS DAMPPROOFING. ALL OTHER SURFACES, WITH EXCEPTION TO THE UNDERSIDE, SHALL BE TREATED WITH A PENETRATING CONCRETE SEALER.

COMMONWEALTH OF MASSACHUSETTS
GREGORY T. STEFANO
STRUCTURAL No. 36726
REGISTERED PROFESSIONAL ENGINEER
5/18/2012

MASSACHUSETTS BAY TRANSPORTATION AUTHORITY

FITCHBURG COMMUTER RAIL LINE
IMPROVEMENT PROJECT
CONTRACT NO. G67CN01

SOUTH ACTON STATION
PIER CAP DETAILS
SHEET 1

ISSUE	DATE	DESCRIPTION	BY	CHKD.	APP.

HNTB 300 APOLLO DRIVE CHELMSFORD, MA 01824 (978) 905-4000
PROJECT MANAGER 5/30/12 Date

MASSACHUSETTS BAY TRANSPORTATION AUTHORITY
APPROVED BY:
PROJECT MANAGER 6/30/12 Date

JACOBS 343 CONGRESS STREET BOSTON, MA 02110 (617) 242-9222

HORIZ: N/A	DES. BY	DR. BY	CHK. BY	PLAN NO. 168650	ISSUE
VERT: N/A	JAG	JAG	MWT		
DATE: 5/17/12				SHEET S-110	

FILE NAME: P:\MBTA\2008\E2X3780\CAD\700CADD\702STATIONS\South Acton\Structural\PS&E Submission\ 109-111_Minipiles_PierCap_Dets.dwg
PLOT DATE: May 18, 2012 - 8:23am

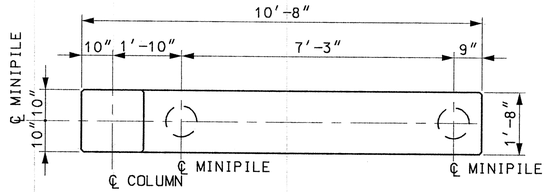

NOTE:
PRECAST CONCRETE PLATFORM ABOVE NOT SHOWN FOR CLARITY.

PLAN

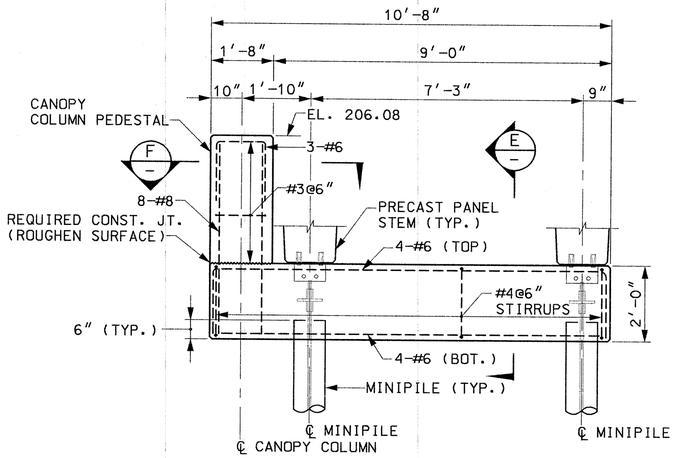

ELEVATION

TYPICAL PIER CAP AT INBOUND CANOPY

(5 LOCATIONS)

SCALE: 1/2" = 1'-0"

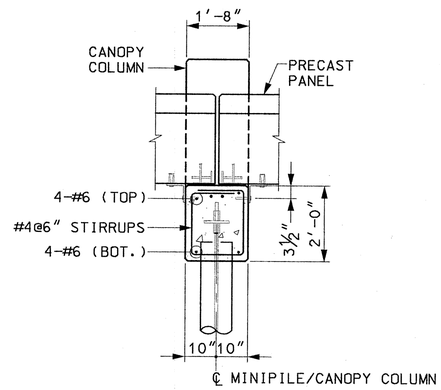

SECTION E
SCALE: 1/2" = 1'-0"

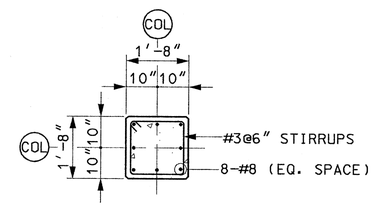

SECTION F
SCALE: 1/2" = 1'-0"

NOTES:

1. FOR GENERAL STRUCTURAL NOTES, SEE SHEETS S-100 AND S-101.
2. FOR MINIPILE DETAILS, SEE SHEET S-109.
3. FOR PLATFORM ANCHORAGE DETAILS, SEE SHEET S-115.
4. BOTTOM FACE OF MINIPILE PIER CAPS SHALL BE FORMED. CASTING AGAINST EARTH WILL NOT BE PERMITTED.
5. SET TOP OF PIER CAP SUCH THAT THE ADDITION OF THE PLATFORM PANEL AND BEARING PAD IS EQUAL TO 4'-0" ABOVE T.O.R. AT THE PLATFORM EDGE.
6. SEE FOUNDATION PLAN ON SHEET S-103 FOR LOCATION OF INBOUND CANOPY PIER CAPS.
6. SURFACES OF PIER CAPS WHICH WILL BE BACKFILLED AGAINST SHALL BE TREATED WITH BITUMINOUS DAMPPROOFING. ALL OTHER SURFACES, WITH EXCEPTION TO THE UNDERSIDE, SHALL BE TREATED WITH A PENETRATING CONCRETE SEALER.
7. FOR CANOPY DETAILS, SEE SHEETS S-144 THRU S-147.

COMMONWEALTH OF MASSACHUSETTS
GREGORY T. STEFANO
STRUCTURAL
No. 36726
REGISTERED
PROFESSIONAL ENGINEER
5/18/2012

ISSUE	DATE	DESCRIPTION	BY	CHKD.	APP.

JACOBS
343 CONGRESS STREET
BOSTON, MA 02110
(617) 242-9222

MASSACHUSETTS BAY TRANSPORTATION AUTHORITY

FITCHBURG COMMUTER RAIL LINE
IMPROVEMENT PROJECT
CONTRACT NO. G67CN01

SOUTH ACTON STATION
PIER CAP DETAILS
SHEET 2

HNTB
300 APOLLO DRIVE
CHELMSFORD, MA 01824
(978) 905-4000

PROJECT MANAGER 5/20/12 Date

MASSACHUSETTS BAY TRANSPORTATION AUTHORITY
APPROVED BY
PROJECT MANAGER 6/30/12 Date

HORIZ: N/A	DES. BY	DR. BY	CHK. BY	PLAN NO. 168651	ISSUE
VERT: N/A	JAG	JAG	MWT		
DATE: 5/17/12				SHEET S-111	

FILE NAME: P:\MBTA\2008\E2X37800\CAD\700CADD\702STATIONS\South Acton\Structural\PS&E Submission\ 109-111_Minipiles_PierCap_Dets.dwg
PLOT DATE: May 18, 2012 – 8:23am

NOTES:

1. FOR GENERAL STRUCTURAL NOTES, SEE SHEETS S-100 AND S-101.
2. FOR EXISTING AND PROPOSED UTILITY LOCATIONS SEE UTILITY, CIVIL, AND ELECTRICAL PLANS.
3. FOR MINIPILE AND PIER CAP DETAILS, SEE SHEETS S-109 THROUGH S-111.
4. SET TOP OF PIER CAP SUCH THAT THE ADDITION OF THE PLATFORM PANEL AND BEARING PAD IS EQUAL TO 4'-0" ABOVE T.O.R. AT THE PLATFORM EDGE.
5. PROVIDE 1/8"x1" DEEP BLOCKOUT FOR JOINT DETAIL (1 PANEL LOCATION). SEE OUTBOUND EGRESS RAMP DETAILS, SHEET S-148.

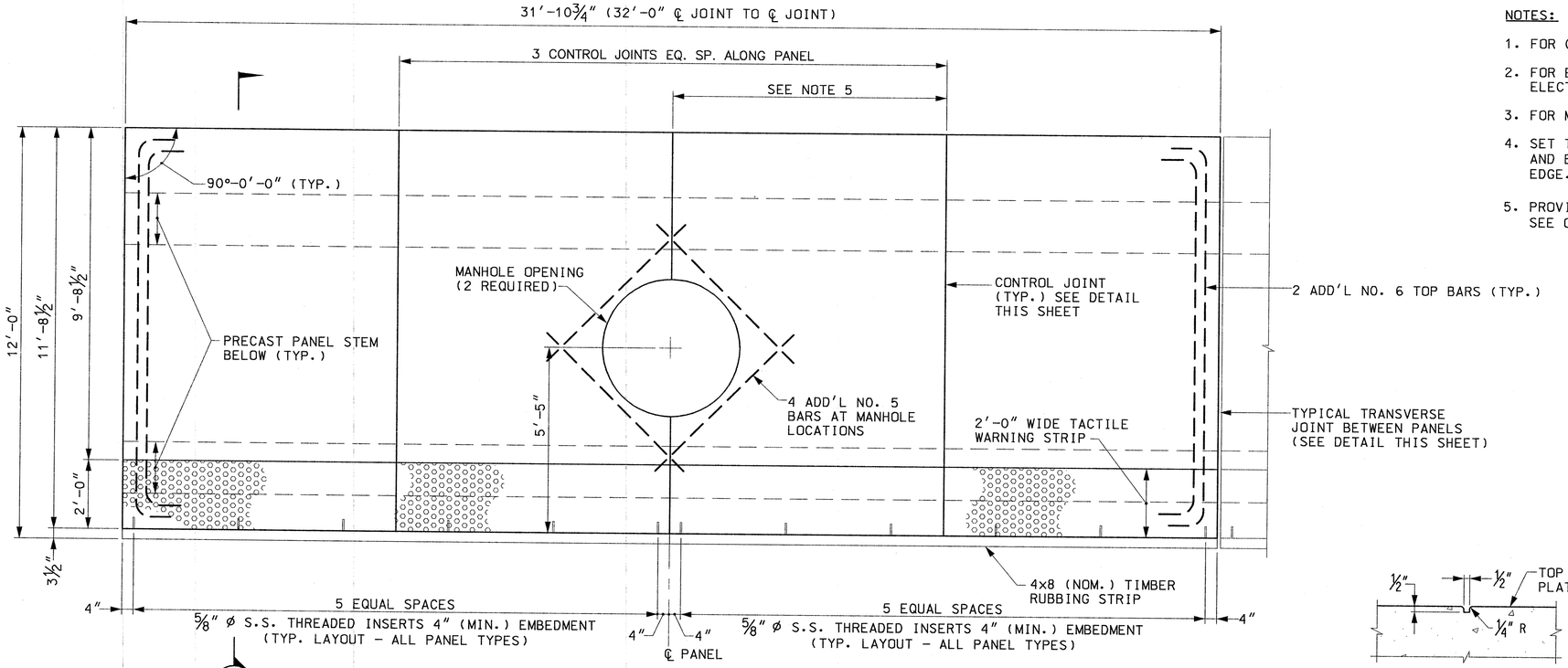

TYPICAL PRECAST PLATFORM PANEL PLAN (PANEL TYPE A)

SCALE: 1/2" = 1'-0"

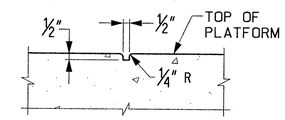

CONTROL JOINT DETAIL

SCALE: 2" = 1'-0"

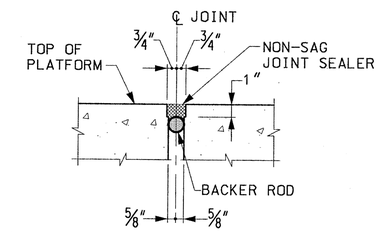

TYPICAL TRANSVERSE JOINT DETAIL BETWEEN PANEL

SCALE: 2" = 1'-0"

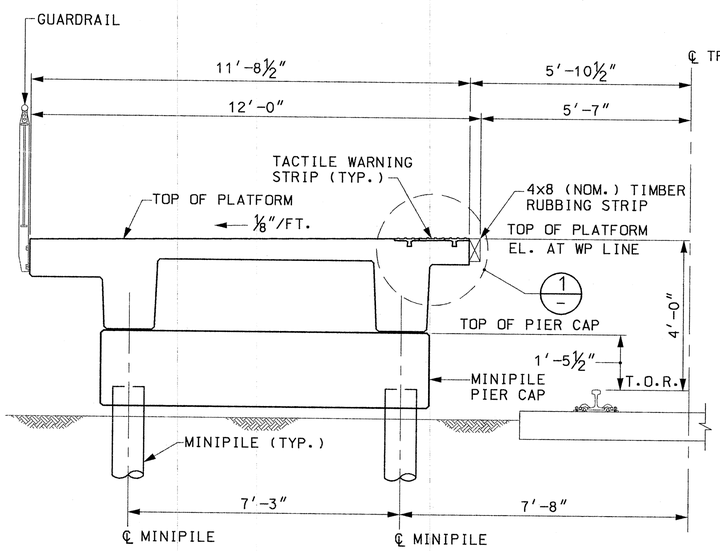

TYPICAL PLATFORM SECTION

SCALE: 1/2" = 1'-0"

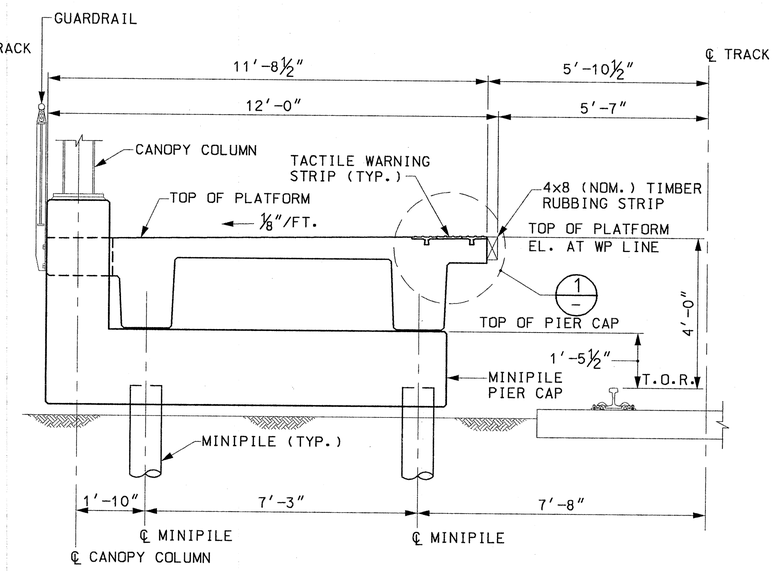

PLATFORM SECTION AT INBOUND CANOPY

SCALE: 1/2" = 1'-0"

PLATFORM PANEL QUANTITY TABLE

PANEL TYPE	NUMBER REQUIRED
A	30
B	2
C	3
D	4
E	2
F	2
G	1
H	2
J	1
K	1
L	1
M	1

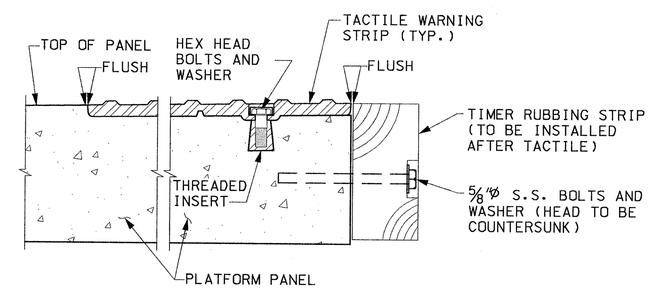

DETAIL 1

SCALE: 3" = 1'-0"

COMMONWEALTH OF MASSACHUSETTS
GREGORY T. STEFANO
STRUCTURAL No. 35726
REGISTERED PROFESSIONAL ENGINEER
5/18/2012

MASSACHUSETTS BAY TRANSPORTATION AUTHORITY

FITCHBURG COMMUTER RAIL LINE
IMPROVEMENT PROJECT
CONTRACT NO. G67CN01

SOUTH ACTON STATION
PRECAST PLATFORM PANEL DETAILS
SHEET 1

ISSUE	DATE	DESCRIPTION	BY	CHKD.	APP.

JACOBS — 343 CONGRESS STREET, BOSTON, MA 02110, (617) 242-9222

HNTB — 300 APOLLO DRIVE, CHELMSFORD, MA 01824, (978) 905-4000

PROJECT MANAGER — Date 5/30/12

MASSACHUSETTS BAY TRANSPORTATION AUTHORITY — APPROVED BY: PROJECT MANAGER — Date 6/30/12

HORIZ: N/A	DES. BY	DR. BY	CHK. BY	PLAN NO. 168652	ISSUE
VERT: N/A	JAG	JAG	MWT		
DATE: 5/17/12				SHEET S-112	

FILE NAME: P:\MBTA\2008\E2X37800\CAD\700CADD\702STATIONS\South Acton\Structural\P&E Submission\ 112-114_Plat_Dets.dwg
PLOT DATE: May 18, 2012 - 8:23am

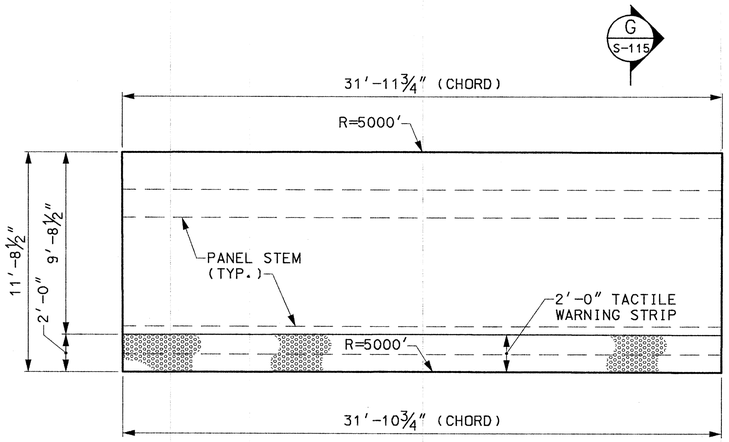

PANEL TYPE B
SCALE: 1/4" = 1'-0"

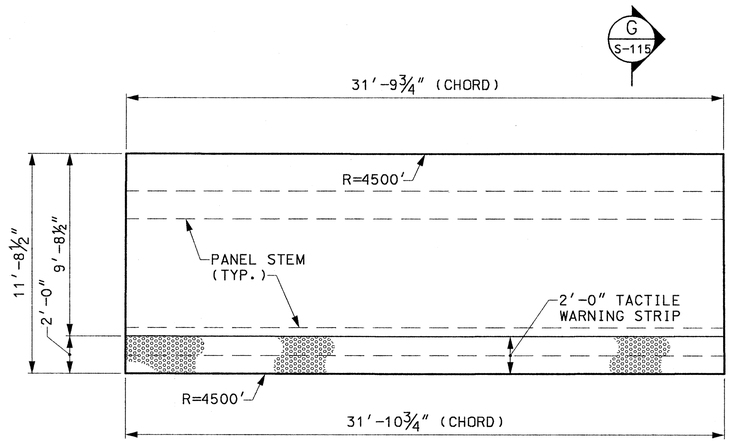

PANEL TYPE C
SCALE: 1/4" = 1'-0"

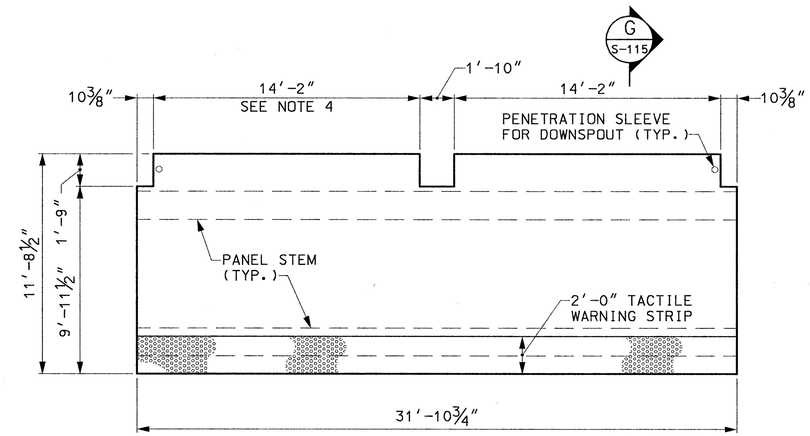

PANEL TYPE D
SCALE: 1/4" = 1'-0"

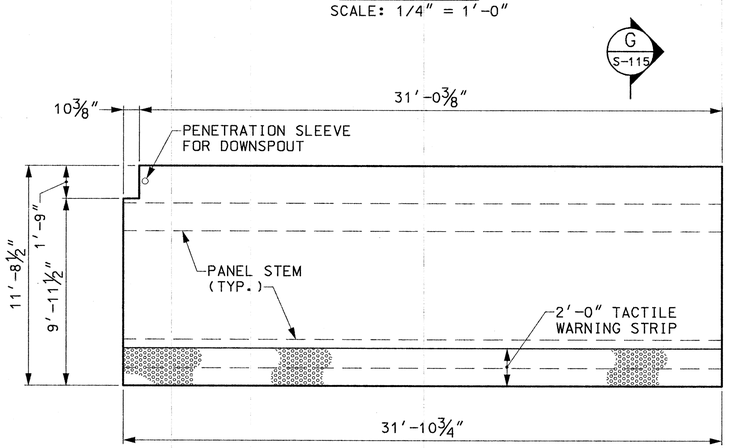

PANEL TYPE E
SCALE: 1/4" = 1'-0"

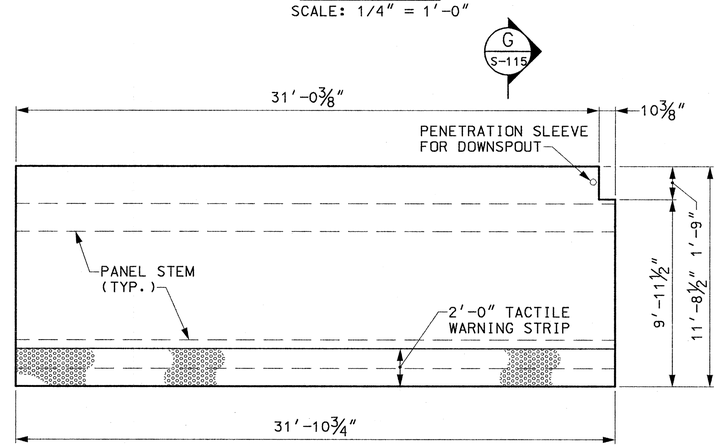

PANEL TYPE F
SCALE: 1/4" = 1'-0"

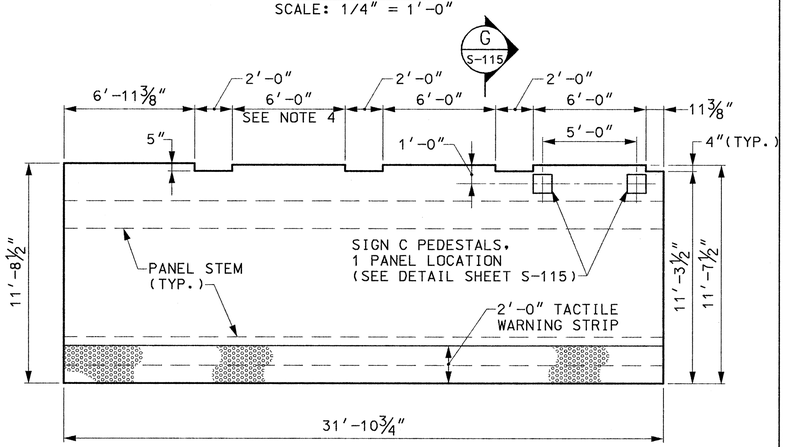

PANEL TYPE G
SCALE: 1/4" = 1'-0"

NOTES:

1. FOR GENERAL STRUCTURAL NOTES, SEE SHEETS S-100 AND S-101.
2. FOR UTILITY LOCATIONS SEE CIVIL AND ELECTRICAL PLANS.
3. FOR MINIPILE AND PIER CAP DETAILS, SEE SHEETS S-109 THROUGH S-111.
4. PROVIDE ⅛"X1" DEEP BLOCKOUT FOR JOINT DETAIL (2 PANEL 'D' LOCATIONS). SEE DETAIL 33 ON SHEET S-141.

COMMONWEALTH OF MASSACHUSETTS
GREGORY T. STEFANO
No. 36726
STRUCTURAL
REGISTERED PROFESSIONAL ENGINEER
5/18/2012

MASSACHUSETTS BAY TRANSPORTATION AUTHORITY

FITCHBURG COMMUTER RAIL LINE
IMPROVEMENT PROJECT
CONTRACT NO. G67CN01

SOUTH ACTON STATION
PRECAST PLATFORM PANEL DETAILS
SHEET 2

ISSUE	DATE	DESCRIPTION	BY	CHKD.	APP.

HNTB
300 APOLLO DRIVE
CHELMSFORD, MA 01824
(978) 905-4000

PROJECT MANAGER — Date 5/18/12

MASSACHUSETTS BAY TRANSPORTATION AUTHORITY
APPROVED BY:
PROJECT MANAGER — Date 6/13/12

JACOBS
343 CONGRESS STREET
BOSTON, MA 02110
(617) 242-9222

HORIZ: N/A
VERT: N/A
DATE: 5/17/12

DES. BY	DR. BY	CHK. BY
JAG	JAG	MWT

PLAN NO. 168653
SHEET S-113
ISSUE

FILE NAME: P:\MBTA\2008\E2X37800\CAD\700CADD\702STATIONS\South Acton\Structural\PS&E Submission\ 112-114_Plat_Dets.dwg
PLOT DATE: May 18, 2012 - 8:23am

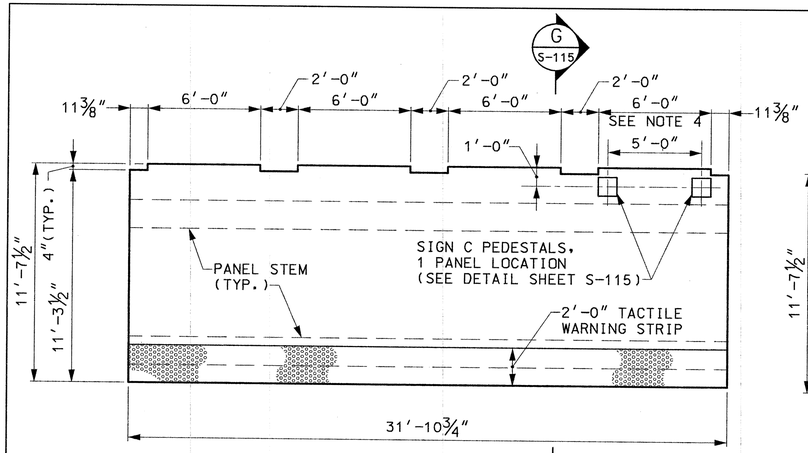

PANEL TYPE H
SCALE: 1/4" = 1'-0"

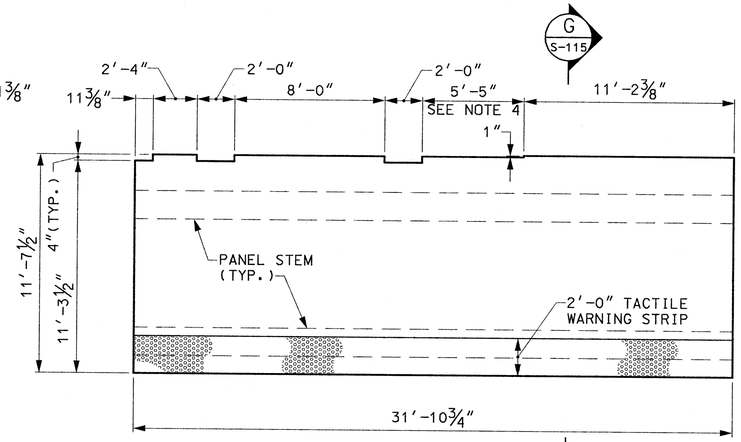

PANEL TYPE J
SCALE: 1/4" = 1'-0"

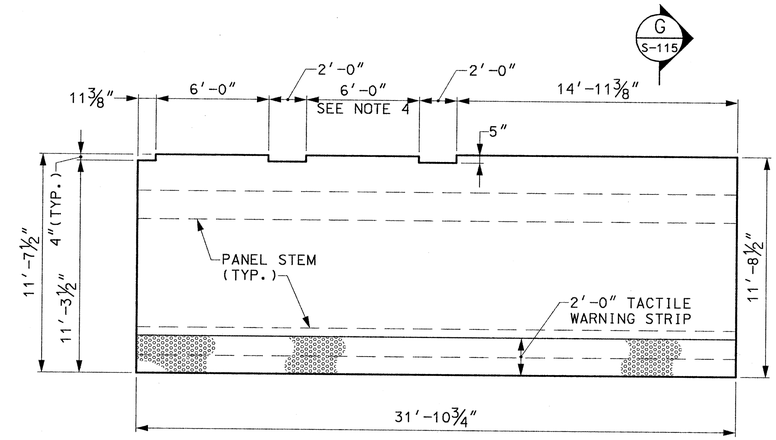

PANEL TYPE K
SCALE: 1/4" = 1'-0"

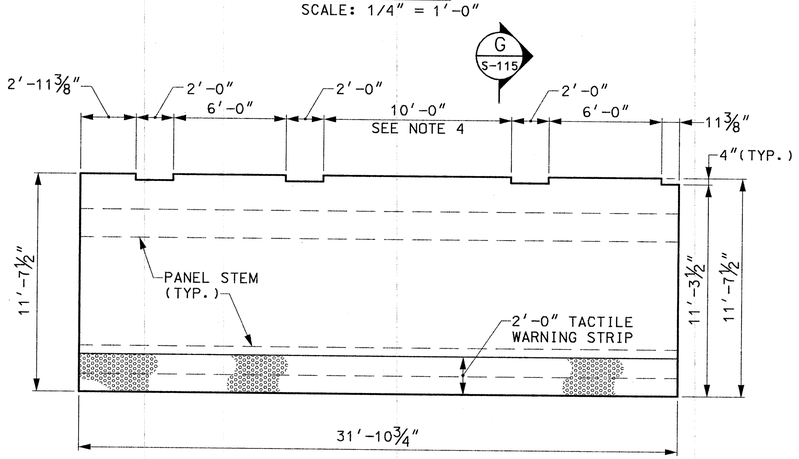

PANEL TYPE L
SCALE: 1/4" = 1'-0"

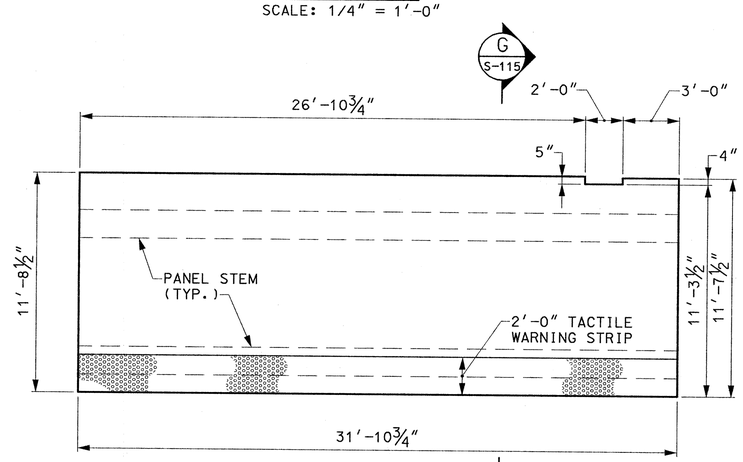

PANEL TYPE M
SCALE: 1/4" = 1'-0"

NOTES:

1. FOR GENERAL STRUCTURAL NOTES, SEE SHEETS S-100 AND S-101.
2. FOR UTILITY LOCATIONS SEE CIVIL AND ELECTRICAL PLANS.
3. FOR MINIPILE AND PIER CAP DETAILS, SEE SHEETS S-109 THROUGH S-111.
4. PROVIDE 1/8"X1" DEEP BLOCKOUT FOR JOINT DETAIL. SEE TYPICAL HAUNCH DETAIL ON SHEET S-118. ONLY 1 LOCATION FOR TYPE H PANEL.

COMMONWEALTH OF MASSACHUSETTS
GREGORY T. STEFANO
STRUCTURAL
No. 36726
REGISTERED PROFESSIONAL ENGINEER
5/18/2012

ISSUE	DATE	DESCRIPTION	BY	CHKD.	APP.

JACOBS
343 CONGRESS STREET
BOSTON, MA 02110
(617) 242-9222

MASSACHUSETTS BAY TRANSPORTATION AUTHORITY

FITCHBURG COMMUTER RAIL LINE
IMPROVEMENT PROJECT
CONTRACT NO. G67CN01

SOUTH ACTON STATION
PRECAST PLATFORM PANEL DETAILS
SHEET 3

HNTB
300 APOLLO DRIVE
CHELMSFORD, MA 01824
(978) 905-4000

PROJECT MANAGER — Date 5/30/12

MASSACHUSETTS BAY TRANSPORTATION AUTHORITY
APPROVED BY:
PROJECT MANAGER — Date 6/20/12

HORIZ: N/A	DES. BY	DR. BY	CHK. BY	PLAN NO. 168654	ISSUE
VERT: N/A	JAG	JAG	MWT		
DATE: 5/17/12				SHEET S-114	

FILE NAME: P:\MBTA\2008\E2X37B00\CAD\700CADD\702STATIONS\South Acton\Structural\PS&E Submission\ 112-114_Plot_Dets.dwg
PLOT DATE: May 18, 2012 - 8:23am

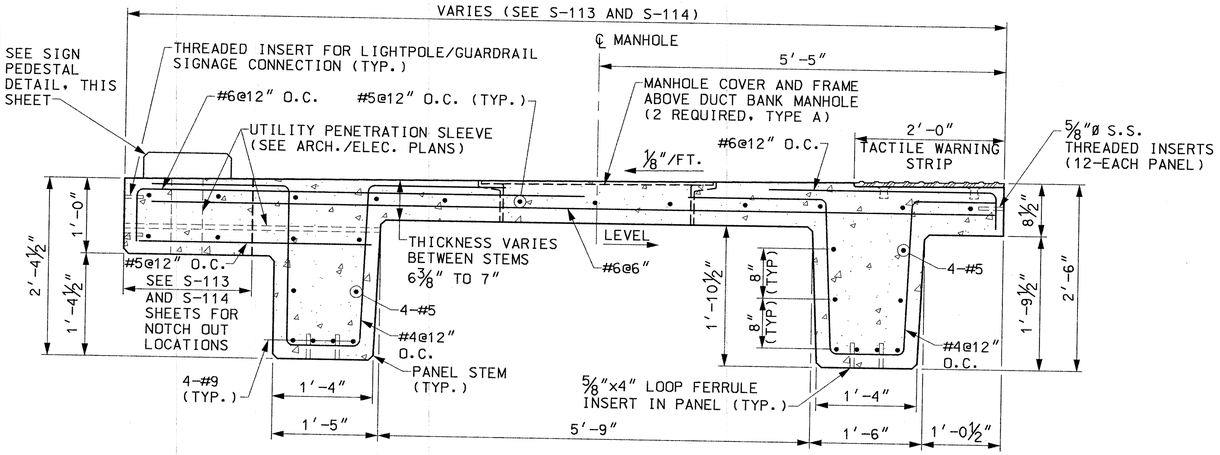

SECTION G (S-113) / G (S-114)
SCALE: 1" = 1'-0"

NOTES:

1. FOR GENERAL STRUCTURAL NOTES, SEE SHEETS S-100 AND S-101.
2. FOR UTILITY LOCATIONS, SEE CIVIL AND ELECTRICAL DRAWINGS.
3. FOR MINIPILE AND PIER CAP DETAILS, SEE SHEETS S-109 THROUGH S-111.
4. THE CONTRACTOR SHALL COORDINATE WITH BOTH THE TACTILE WARNING STRIP MANUFACTURER AND THE PRECAST PANEL MANUFACTURER TO ENSURE THE COMPATIBILITY OF THE TWO PRODUCTS. THE CONTRACTOR SHALL SUBMIT SHOP DRAWINGS SHOWING THE COMPOSITE PRODUCT OF THE PRECAST CONCRETE PANELS AND TACTILE WARNING STRIPS TO THE ENGINEER FOR APPROVAL.
5. TACTILE MANUFACTURER SHALL SUPPLY COMPLETED PANEL TO PRECAST PANEL MANUFACTURER FOR FIT PRIOR TO CASTING PRECAST PANELS.
6. COORDINATE SIZE AND LOCATION OF PENETRATION SLEEVES AND THREADED INSERTS WITH ARCHITECTURAL PLANS.

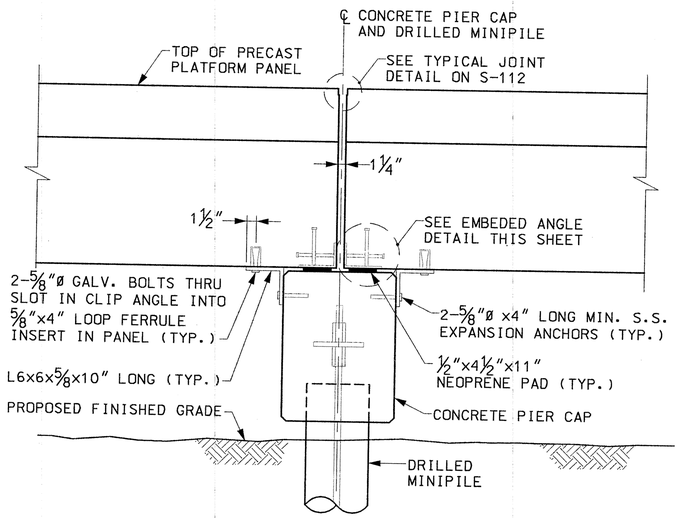

TYPICAL PIER CAP
SCALE: 1" = 1'-0"

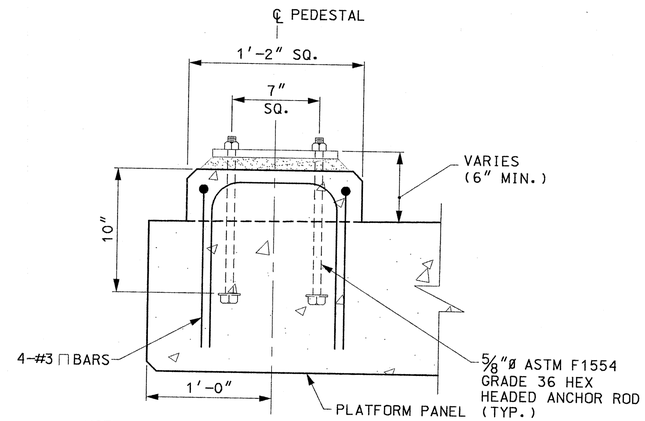

NOTE: 2 LOCATIONS, PANEL TYPE G AND 1 PANEL TYPE H ONLY. SEE SHEETS S-113 AND S-114 FOR POSITIONING.

SIGN PEDESTAL DETAIL
SCALE: 2" = 1'-0"

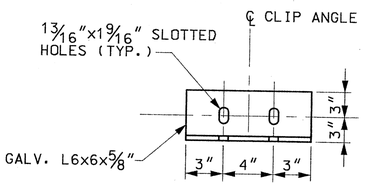

CLIP ANGLE DETAIL
SCALE: NTS

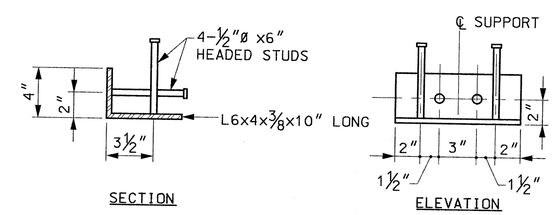

EMBEDED ANGLE DETAIL
SCALE: NTS

COMMONWEALTH OF MASSACHUSETTS — GREGORY T. STEFANO — STRUCTURAL No. 36726 — REGISTERED PROFESSIONAL ENGINEER
5/18/2012

MASSACHUSETTS BAY TRANSPORTATION AUTHORITY

FITCHBURG COMMUTER RAIL LINE
IMPROVEMENT PROJECT
CONTRACT NO. G67CN01

SOUTH ACTON STATION PRECAST PLATFORM PANEL DETAILS SHEET 4

ISSUE	DATE	DESCRIPTION	BY	CHKD.	APP.

HNTB — 300 APOLLO DRIVE, CHELMSFORD, MA 01824, (978) 905-4000
PROJECT MANAGER — Date 5/30/12

MASSACHUSETTS BAY TRANSPORTATION AUTHORITY
APPROVED BY: PROJECT MANAGER — Date 6/30/12

JACOBS — 343 CONGRESS STREET, BOSTON, MA 02110, (617) 242-9222

HORIZ: N/A	DES. BY	DR. BY	CHK. BY	PLAN NO. 168655	ISSUE
VERT: N/A	JAG	JAG	MWT		
DATE: 5/17/12				SHEET S-115	

FILE NAME: P:\MBTA\2008\E2X37800\CAD\700CADD\702STATIONS\South Acton\Structural\PS&E Submission\ 115_Plat_Secs.dwg
PLOT DATE: May 18, 2012 – 8:23am

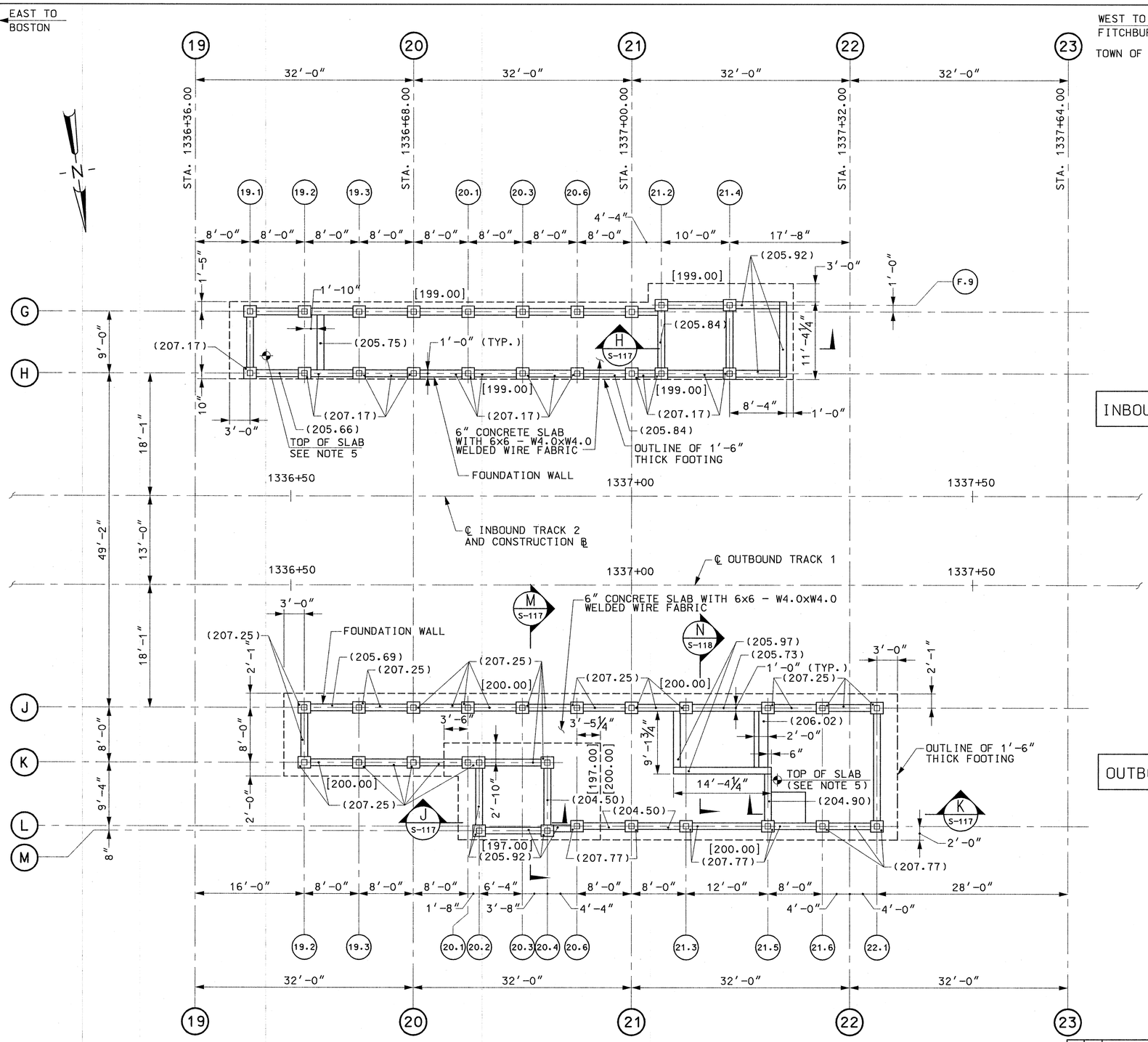

INBOUND HEAD HOUSE

OUTBOUND HEAD HOUSE

NOTES:

1. FOR GENERAL NOTES, SEE SHEETS S-100 AND S-101.
2. FOR PEDESTAL AND FOOTING DETAILS, SEE FOUNDATION DETAIL SHEETS.
3. (XXX.XX) INDICATES ELEVATION AT TOP OF FOUNDATION WALL AND/OR PEDESTAL. TOP OF FOUNDATION WALL AND PEDESTAL ELEVATIONS SHALL BE 206.67 AT INBOUND AND OUTBOUND HEAD HOUSES UNLESS NOTED OTHERWISE.
4. [XXX.XX] INDICATES ELEVATION AT BOTTOM OF FOUNDATION.
5. FOR TOP OF SLAB ELEVATIONS, SEE FOUNDATION DETAILS AND ARCHITECTURAL DRAWINGS.
6. CONTRACTOR SHALL COORDINATE ALL DIMENSIONS, DOOR AND WINDOW SIZES AND LOCATIONS WITH ARCHITECTURAL DRAWINGS.
7. FOR EXISTING AND PROPOSED SITE UTILITIES, SEE UTILITY, CIVIL, AND ELECTRICAL SHEETS.
8. FOR PROPERTY LINES, SEE SHEET C-3.

FOUNDATION PLAN
SCALE: 1/8" = 1'-0"

COMMONWEALTH OF MASSACHUSETTS
GREGORY T. STEFANO
STRUCTURAL
No. 36726
REGISTERED PROFESSIONAL ENGINEER
5/18/2012

MASSACHUSETTS BAY TRANSPORTATION AUTHORITY
FITCHBURG COMMUTER RAIL LINE
IMPROVEMENT PROJECT
CONTRACT NO. G67CN01

SOUTH ACTON STATION
HEAD HOUSES
FOUNDATION PLAN

ISSUE	DATE	DESCRIPTION	BY	CHKD.	APP.

HNTB
300 APOLLO DRIVE
CHELMSFORD, MA 01824
(978) 905-4000
PROJECT MANAGER — Date 5/18/12

MASSACHUSETTS BAY TRANSPORTATION AUTHORITY
APPROVED BY:
PROJECT MANAGER — Date 6/30/12

JACOBS
343 CONGRESS STREET
BOSTON, MA 02210
(617) 242-9222

HORIZ: N/A	DES. BY	DR. BY	CHK. BY	PLAN NO. 168656	ISSUE
VERT: N/A	DJM	DJM	MWT		
DATE: 5/17/12				SHEET S-116	

FILE NAME: P:\MBTA\2008\E2X37800\CAD\700CADD\702STATIONS\South Acton\Structural\PS&E Submission\ 116_Head_Houses_Foundation_Plan.dwg
PLOT DATE: May 21, 2012 - 1:53pm

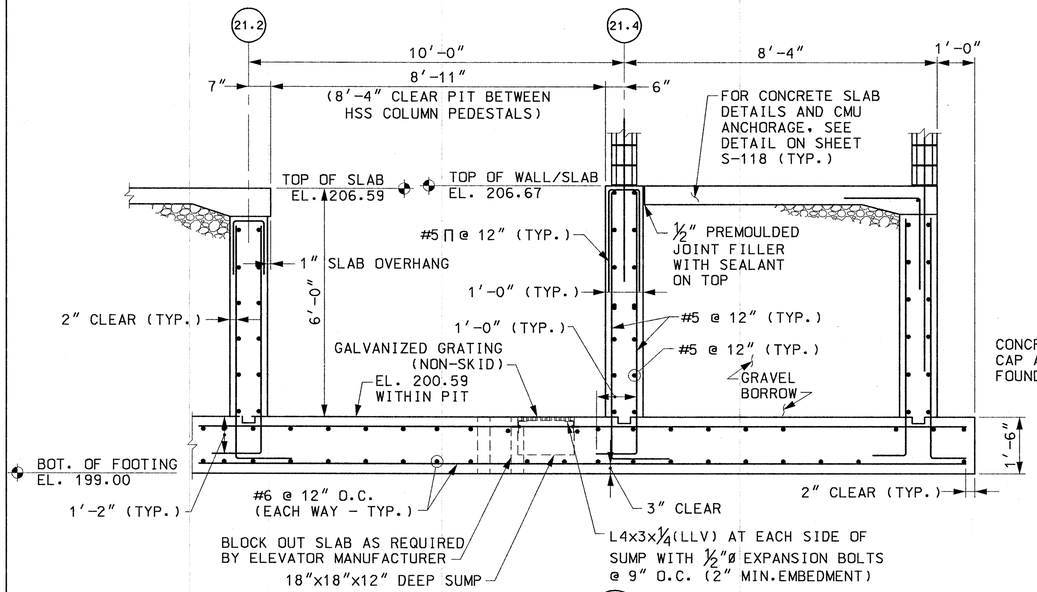

SECTION H S-116
SCALE: 1/2" = 1'-0"

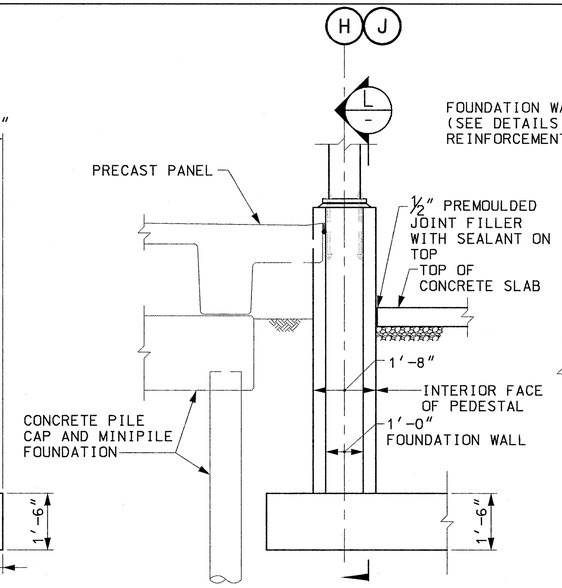

NOTE: REINFORCEMENT NOT SHOWN FOR CLARITY.

TYPICAL SECTION AT PLATFORMS
NOT TO SCALE

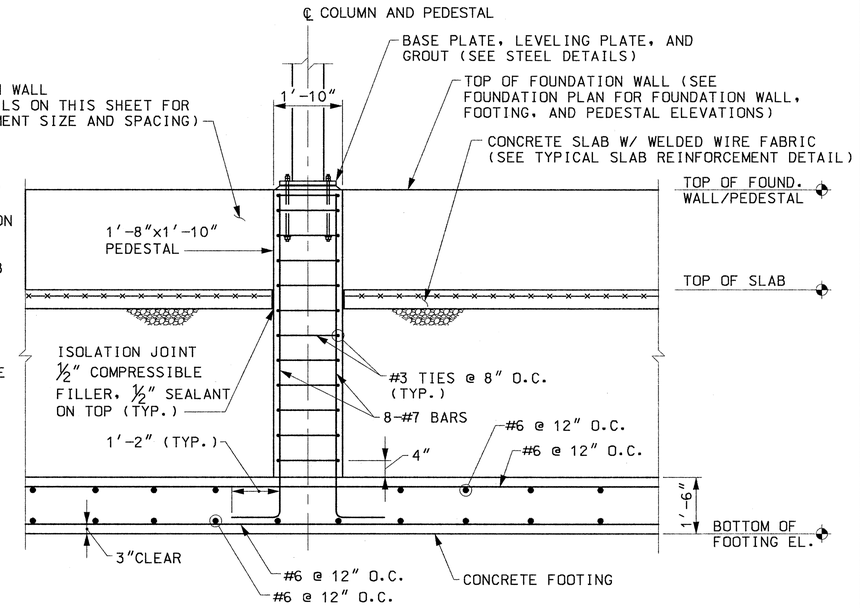

SECTION L -
SCALE: 1/2" = 1'-0"

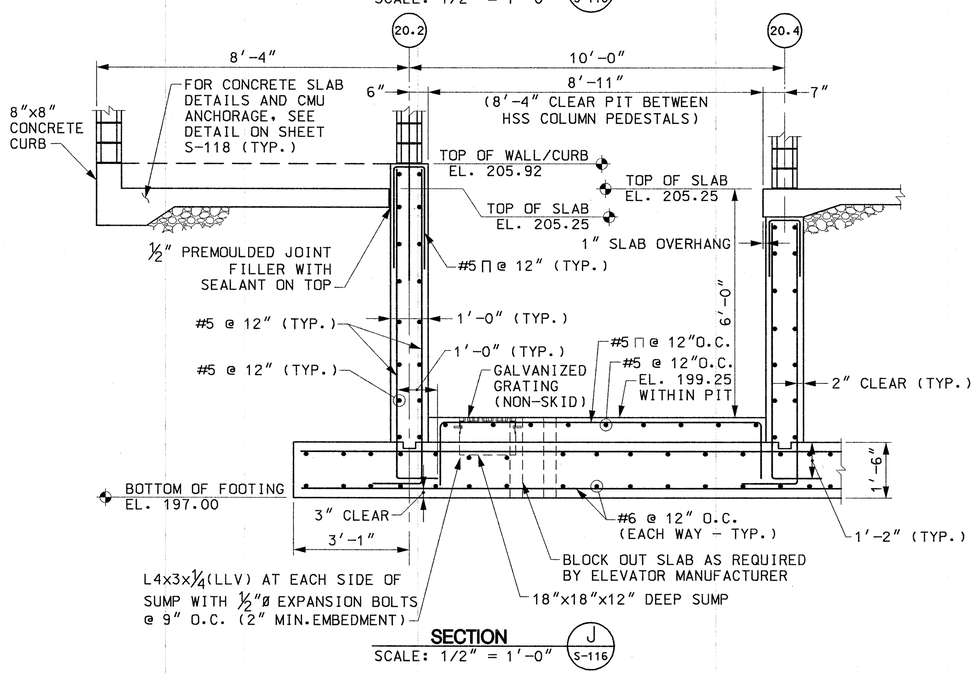

SECTION J S-116
SCALE: 1/2" = 1'-0"

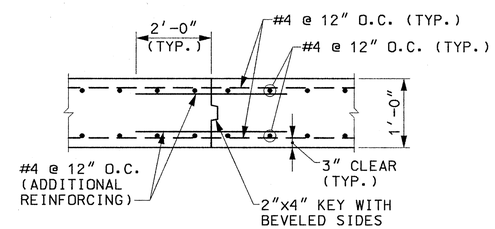

FOUNDATION WALL CONSTRUCTION JOINT DETAIL
NOT TO SCALE

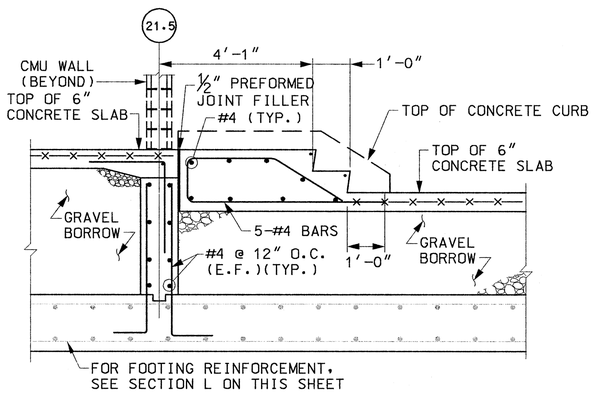

SECTION K S-116
NOT TO SCALE

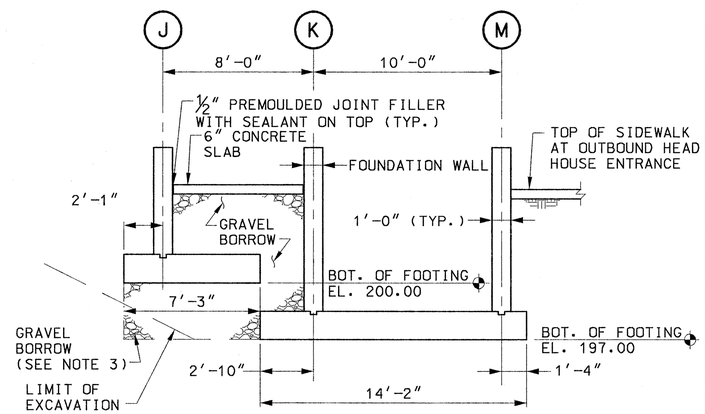

NOTE: REINFORCEMENT NOT SHOWN FOR CLARITY.

SECTION M S-116
SCALE: 1/4" = 1'-0"

NOTES:

1. FOR GENERAL NOTES, SEE SHEETS S-100 AND S-101.
2. THE CONTRACTOR SHALL COORDINATE STRUCTURAL AND ARCHITECTURAL DRAWINGS. ANY DISCREPANCIES SHALL BE BROUGHT TO THE ATTENTION OF THE ENGINEER.
3. GRAVEL BORROW SHALL BE PLACED AND THOROUGHLY COMPACTED TO THE GRADE OF THE BOTTOM OF THE FOOTINGS.

COMMONWEALTH OF MASSACHUSETTS — GREGORY T. STEFANO — STRUCTURAL No. 36726 — REGISTERED PROFESSIONAL ENGINEER — 5/18/2012

MASSACHUSETTS BAY TRANSPORTATION AUTHORITY
FITCHBURG COMMUTER RAIL LINE IMPROVEMENT PROJECT
CONTRACT NO. G67CN01

SOUTH ACTON STATION HEAD HOUSES FOUNDATION DETAILS SHEET 1

ISSUE	DATE	DESCRIPTION	BY	CHKD.	APP.

HNTB — 300 APOLLO DRIVE CHELMSFORD, MA 01824 (978) 905-4000 — PROJECT MANAGER — Date 5/30/12

MASSACHUSETTS BAY TRANSPORTATION AUTHORITY — APPROVED BY: PROJECT MANAGER — Date 6/30/12

JACOBS — 343 CONGRESS STREET BOSTON, MA 02110 (617) 242-9222

HORIZ: N/A	DES. BY	DR. BY	CHK. BY	PLAN NO. 168657	ISSUE
VERT: N/A	DJM	DJM	MWT		
DATE: 5/17/12				SHEET S-117	

FILE NAME: P:\MBTA\2008\E2X37800\CAD\700CADD\702STATIONS\South Acton\Structural\PS&E Submission\ 117-118_Head_House_Found_Dets.dwg
PLOT DATE: May 21, 2012 - 1:54pm

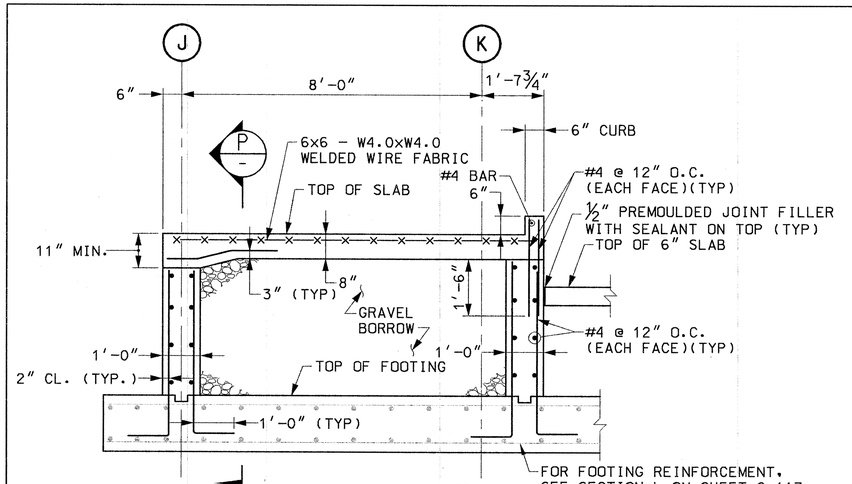

SECTION N / S-116
SCALE: 1/2" = 1'-0"

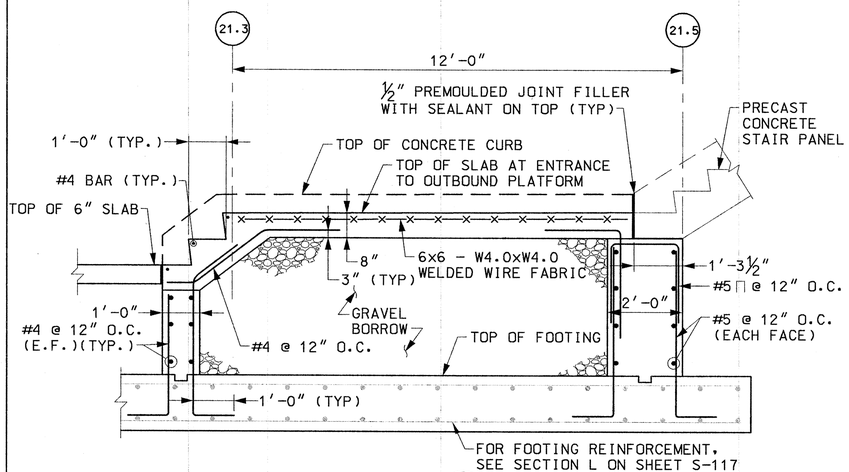

SECTION P / -
SCALE: 1/2" = 1'-0"

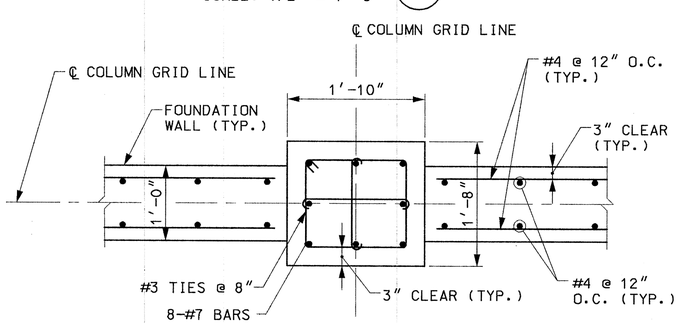

TYPICAL PEDESTAL AND WALL DETAIL
SCALE: 1" = 1'-0"

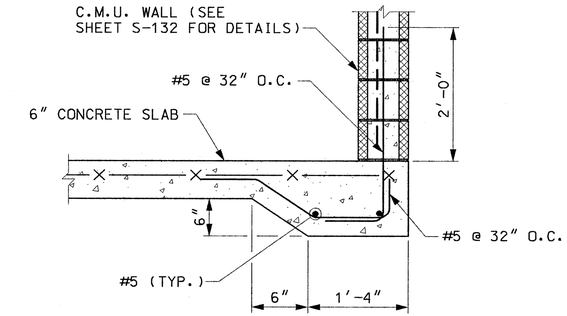

MASONRY WALL AT EDGE OF CONCRETE SLAB
NOT TO SCALE

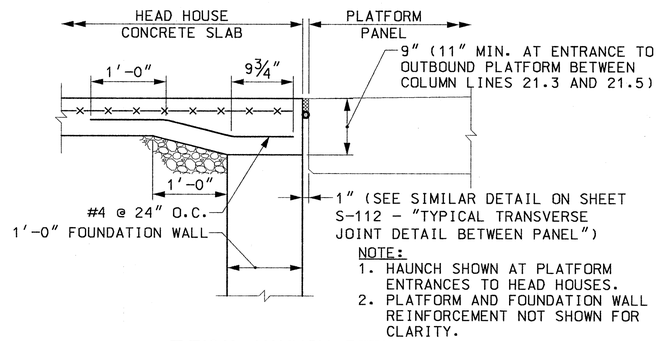

NOTE:
1. HAUNCH SHOWN AT PLATFORM ENTRANCES TO HEAD HOUSES.
2. PLATFORM AND FOUNDATION WALL REINFORCEMENT NOT SHOWN FOR CLARITY.

TYPICAL HAUNCH DETAIL
SCALE: 1" = 1'-0"

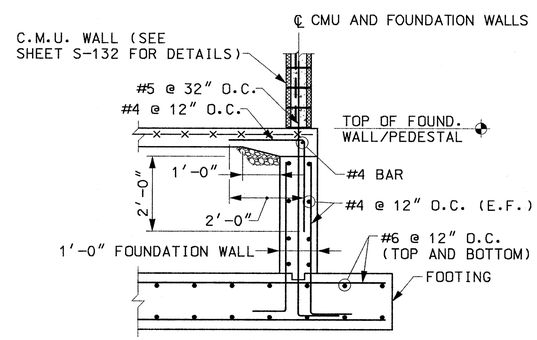

TYPICAL DETAIL AT MASONRY AND FOUNDATION WALLS
NOT TO SCALE

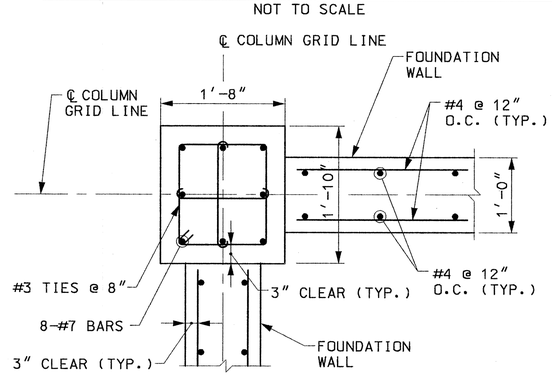

PEDESTAL AND WALL DETAIL AT CORNERS
SCALE: 1" = 1'-0"

NOTES:

1. FOR GENERAL NOTES, SEE SHEETS S-100 AND S-101.
2. THE CONTRACTOR SHALL COORDINATE STRUCTURAL AND ARCHITECTURAL DRAWINGS. ANY DISCREPANCIES SHALL BE BROUGHT TO THE ATTENTION OF THE ENGINEER.
3. CONSTRUCTION JOINTS SHALL OCCUR AT BUILDING GRID LINES.
4. FOR TOP OF SLAB AND TOP OF PILASTER ELEVATIONS, SEE FOUNDATION PLAN.

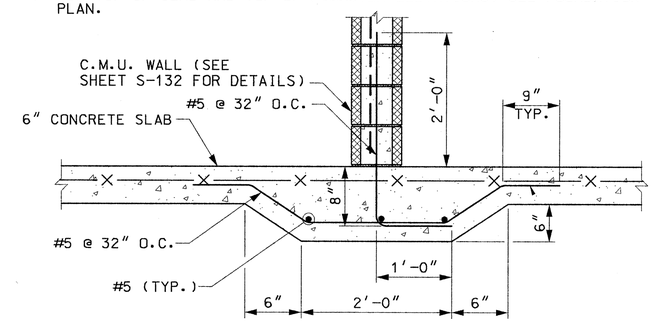

TYPICAL THICKENED CONCRETE SLAB AT MASONRY WALL
NOT TO SCALE

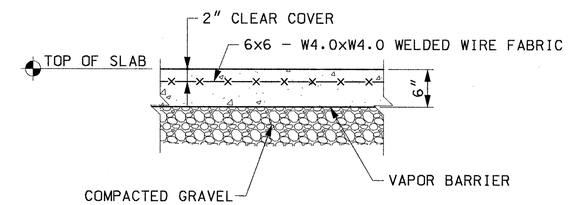

TYPICAL SLAB REINFORCEMENT
NOT TO SCALE

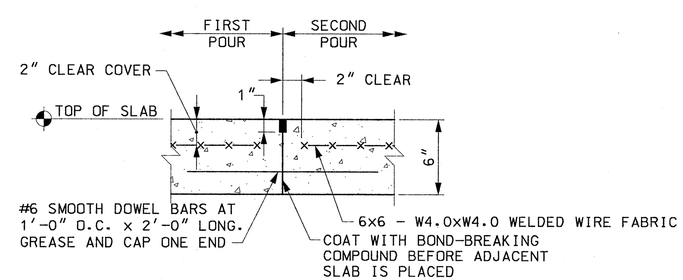

SLAB CONSTRUCTION JOINT DETAIL
NOT TO SCALE

COMMONWEALTH OF MASSACHUSETTS
GREGORY T. STEFANO
STRUCTURAL
No. 36726
REGISTERED PROFESSIONAL ENGINEER
5/18/2012

MASSACHUSETTS BAY TRANSPORTATION AUTHORITY

FITCHBURG COMMUTER RAIL LINE
IMPROVEMENT PROJECT
CONTRACT NO. G67CN01

SOUTH ACTON STATION
HEAD HOUSES FOUNDATION DETAILS
SHEET 2

ISSUE	DATE	DESCRIPTION	BY	CHKD.	APP.

HNTB
300 APOLLO DRIVE
CHELMSFORD, MA 01824
(978) 905-4000
PROJECT MANAGER 5/31/12 Date

MASSACHUSETTS BAY TRANSPORTATION AUTHORITY
APPROVED BY
PROJECT MANAGER 6/30/12 Date

JACOBS
343 CONGRESS STREET
BOSTON, MA 02110
(617) 242-9222

HORIZ: N/A	DES. BY	DR. BY	CHK. BY	PLAN NO. 168658	ISSUE
VERT: N/A	DJM	DJM	MWT		
DATE: 5/17/12				SHEET S-118	

FILE NAME: P:\MBTA\2008\E2X37800\CAD\700CADD\702STATIONS\South Acton\Structural\PS&E Submission\ 117-118_Head_House_Found_Dets.dwg
PLOT DATE: May 18, 2012 - 8:23am

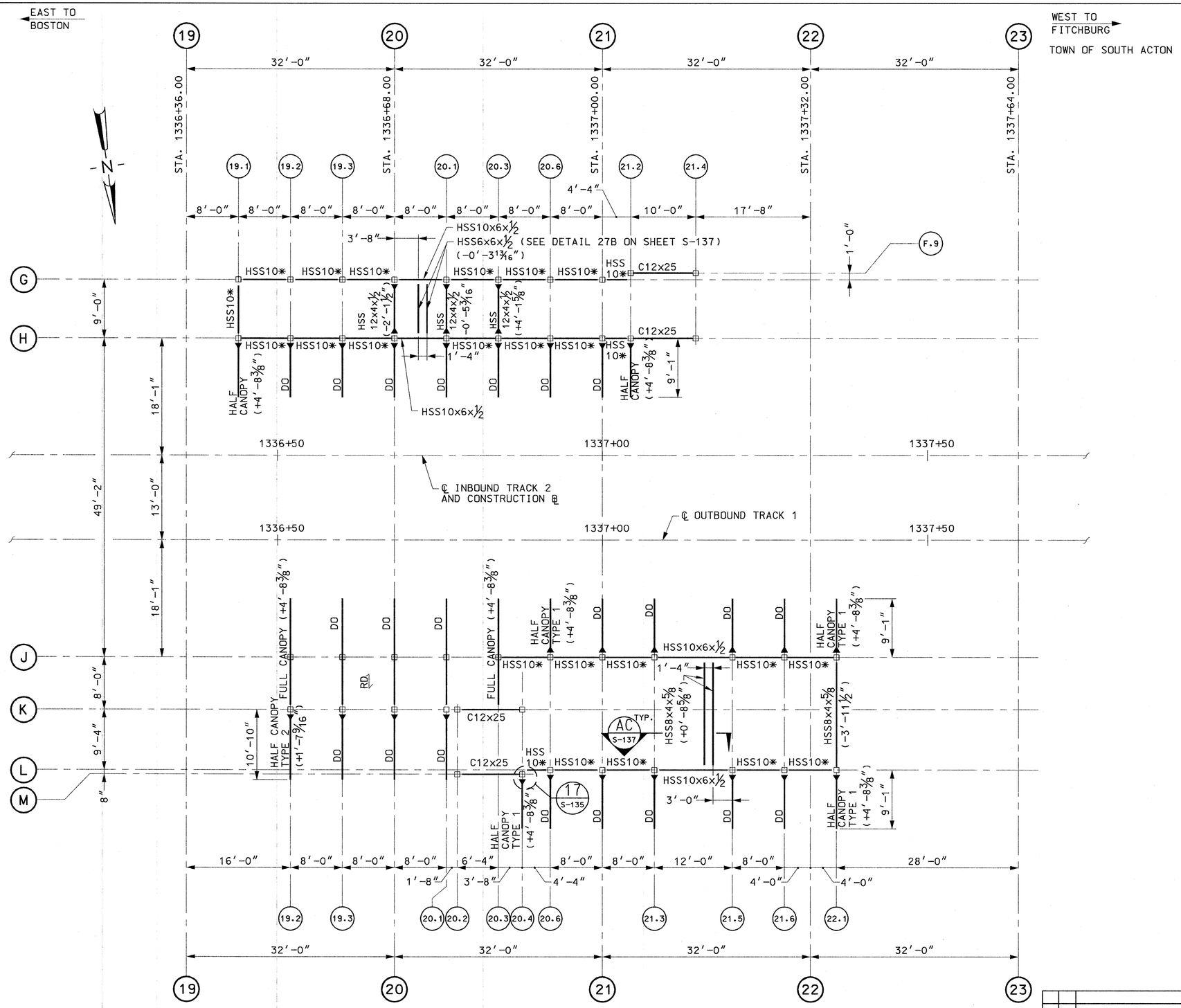

LOWER LEVEL AND LOW ROOF FRAMING PLAN

SCALE: 1/8" = 1'-0"

NOTES:

1. TOP OF STEEL ELEVATION IS 215.77 UNLESS OTHERWISE NOTED THUS (+/-0'-0").
2. FOR GENERAL NOTES, SEE SHEETS S-100 AND S-101.
3. FOR STEEL DETAILS, SEE SHEETS S-133 THRU S-140.
4. FOR FRAME ELEVATIONS, SEE SHEETS S-123 THRU S-127.
5. FOR CANOPY FRAMING AND DETAILS, SEE SHEETS S-138, S-139, AND SHEETS S-144 THRU S-147.
6. ROOF CONSTRUCTION SHALL BE 1½ INCH DEEP, 18 GAUGE GALVANIZED, RIBBED ROOF PANELS.

LEGEND

HSS10* INDICATES HSS10x4x5/16 BEAM

INDICATES MOMENT CONNECTION

RD. INDICATES ROOF DECK DIRECTION

COMMONWEALTH OF MASSACHUSETTS
GREGORY T. STEFANO
STRUCTURAL
No. 36726
REGISTERED PROFESSIONAL ENGINEER
5/18/2012

MASSACHUSETTS BAY TRANSPORTATION AUTHORITY

FITCHBURG COMMUTER RAIL LINE
IMPROVEMENT PROJECT
CONTRACT NO. G67CN01

SOUTH ACTON STATION
HEAD HOUSES LOWER LEVEL AND
LOW ROOF FRAMING PLAN

ISSUE	DATE	DESCRIPTION	BY	CHKD.	APP.

HNTB
300 APOLLO DRIVE
CHELMSFORD, MA 01824
(978) 905-4000

PROJECT MANAGER 5/30/12 Date

MASSACHUSETTS BAY TRANSPORTATION AUTHORITY
APPROVED BY:
PROJECT MANAGER 6/13/12 Date

JACOBS
343 CONGRESS STREET
BOSTON, MA 02110
(617) 242-9222

HORIZ: N/A	DES. BY	DR. BY	CHK. BY	PLAN NO. 168659	ISSUE
VERT: N/A	DJM	DJM	MWT		
DATE: 5/17/12				SHEET S-119	

FILE NAME: P:\MBTA\2008\E2X37800\CAD\700CADD\702STATIONS\South Acton\Structural\PS&E Submission\ 119_Head_Houses_Framing_Plans.dwg
PLOT DATE: May 18, 2012 – 8:23am

EAST TO BOSTON

WEST TO FITCHBURG

TOWN OF SOUTH ACTON

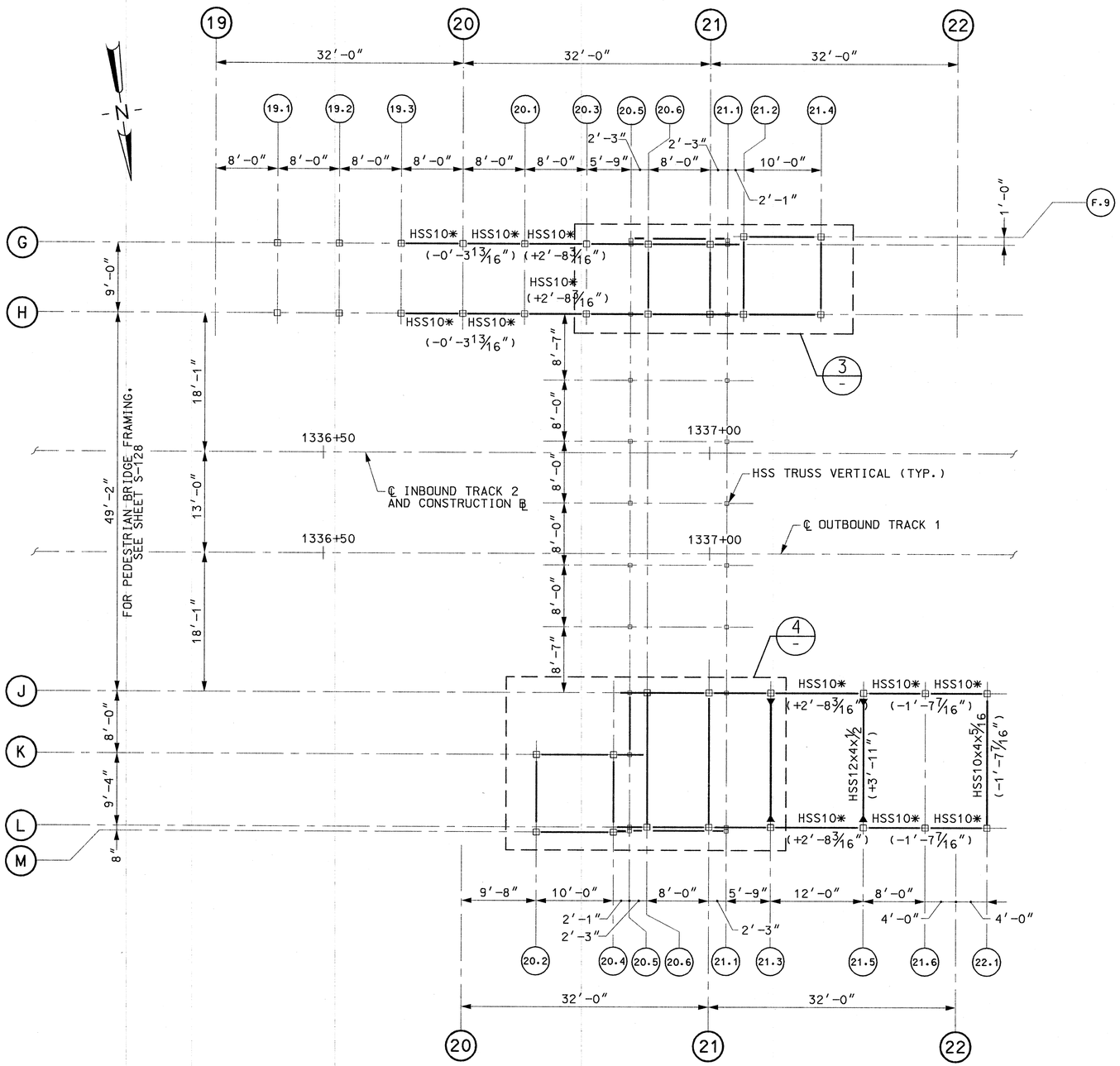

SECOND FLOOR FRAMING PLAN

SCALE: 1/8" = 1'-0"

NOTES:

1. TOP OF STEEL ELEVATION IS 222.09 UNLESS OTHERWISE NOTED THUS (+/-0'-0").
2. FOR GENERAL NOTES, SEE SHEETS S-100 AND S-101.
3. FOR STEEL DETAILS, SEE SHEETS S-133 THRU S-140.
4. FOR FRAME ELEVATIONS, SEE SHEETS S-123 THRU S-127.

LEGEND

**	INDICATES HSS6x6x1/2 BEAM (+1'-10 1/8")
HSS10*	INDICATES HSS10x4x5/16 BEAM
►	INDICATES MOMENT CONNECTION
RD.	INDICATES ROOF DECK DIRECTION

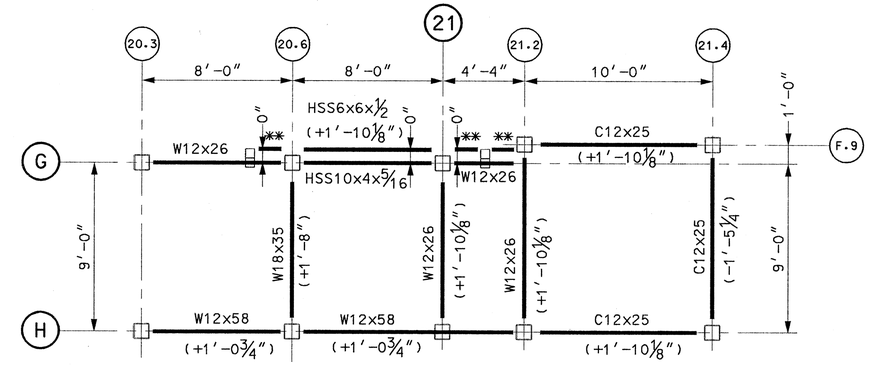

DETAIL 3/-

SCALE: 1/4" = 1'-0"

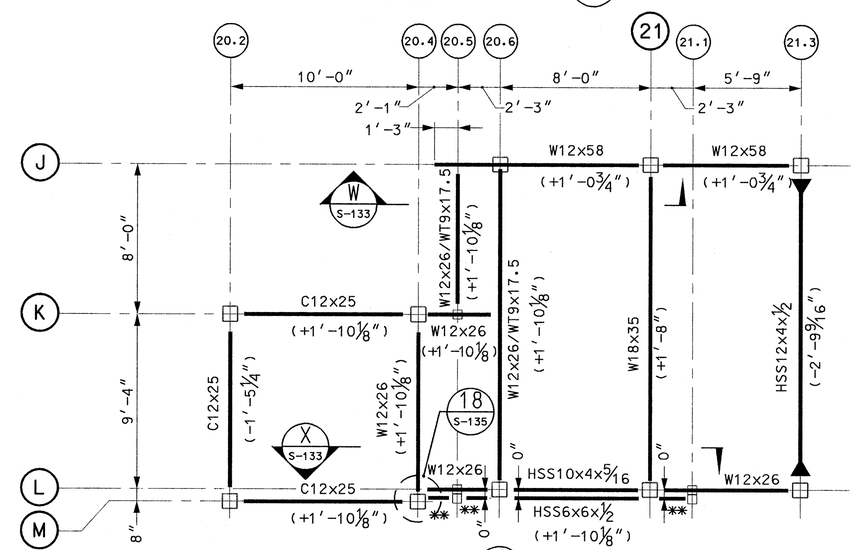

DETAIL 4/-

SCALE: 1/4" = 1'-0"

COMMONWEALTH OF MASSACHUSETTS
GREGORY T. STEFANO
STRUCTURAL
No. 36726
REGISTERED PROFESSIONAL ENGINEER
5/18/2012

MASSACHUSETTS BAY TRANSPORTATION AUTHORITY

FITCHBURG COMMUTER RAIL LINE
IMPROVEMENT PROJECT
CONTRACT NO. G67CN01

SOUTH ACTON STATION HEAD HOUSES SECOND FLOOR FRAMING PLAN

ISSUE	DATE	DESCRIPTION	BY	CHKD.	APP.

HNTB
300 APOLLO DRIVE
CHELMSFORD, MA 01824
(978) 905-4000
PROJECT MANAGER — Date 5/30/12

MASSACHUSETTS BAY TRANSPORTATION AUTHORITY
APPROVED BY:
PROJECT MANAGER — Date 6/30/12

JACOBS
343 CONGRESS STREET
BOSTON, MA 02110
(617) 242-9222

HORIZ: N/A	DES. BY	DR. BY	CHK. BY
VERT: N/A	DJM	DJM	MWT
DATE: 5/17/12			

PLAN NO. 168660

SHEET S-120

ISSUE

FILE NAME: P:\MBTA\2008\E2X37800\CAD\700CADD\702STATIONS\South Acton\Structural\PS&E Submission\ 120-122_Head_Houses_Framing_Plans.dwg
PLOT DATE: May 18, 2012 – 8:23am

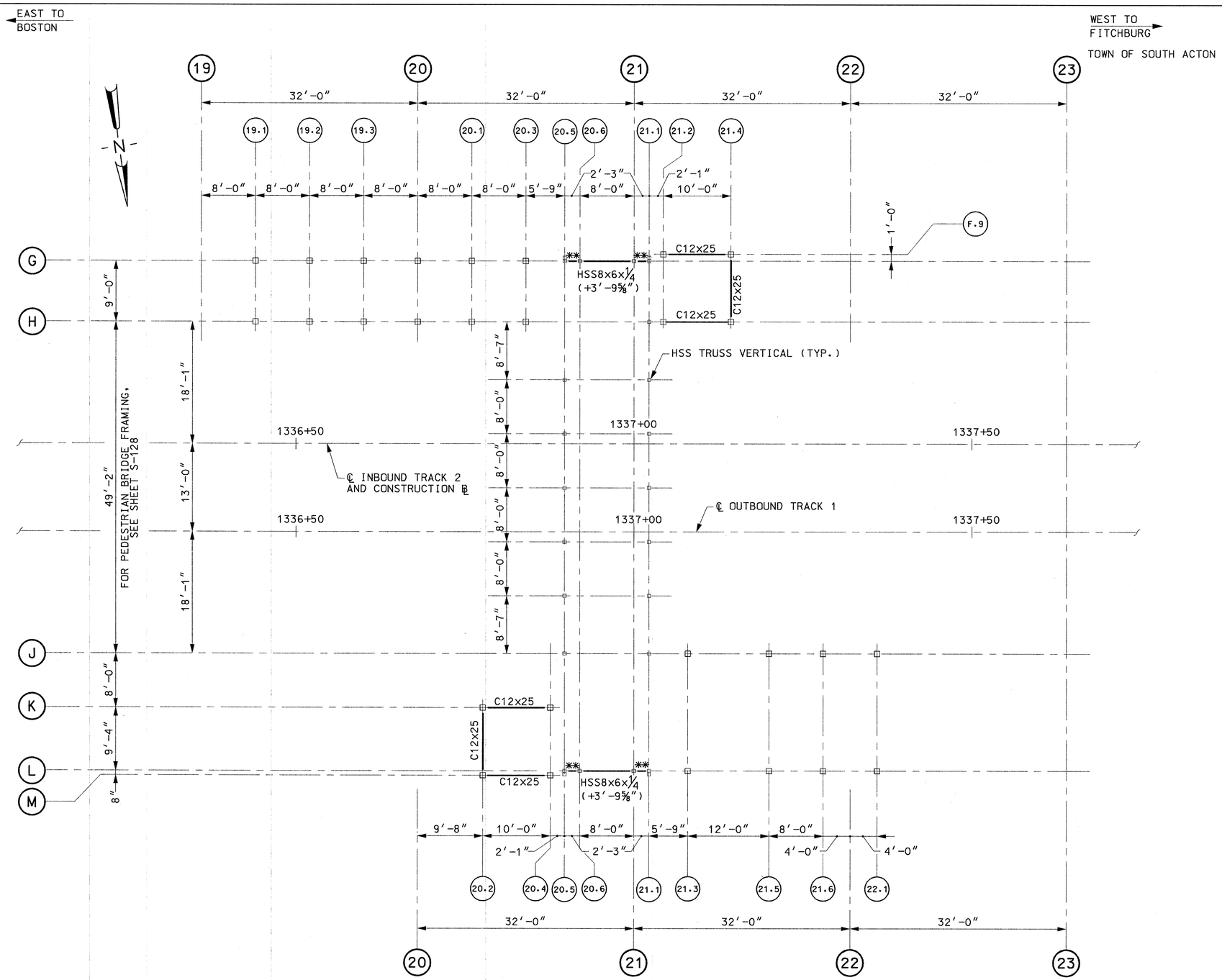

UPPER LEVEL FRAMING PLAN

SCALE: 1/8" = 1'-0"

NOTES:

1. TOP OF STEEL ELEVATION IS 232.59 UNLESS OTHERWISE NOTED THUS (+/-0'-0").
2. FOR GENERAL NOTES, SEE SHEETS S-100 AND S-101.
3. FOR STEEL DETAILS, SEE SHEETS S-133 THRU S-140.
4. FOR FRAME ELEVATIONS, SEE SHEETS S-123 THRU S-127.

LEGEND

** INDICATES HSS6x6x1/2 BEAM (+2'-10 13/16")

INDICATES MOMENT CONNECTION

COMMONWEALTH OF MASSACHUSETTS
GREGORY T. STEFANO
STRUCTURAL No. 36726
REGISTERED PROFESSIONAL ENGINEER
5/18/2012

MASSACHUSETTS BAY TRANSPORTATION AUTHORITY

FITCHBURG COMMUTER RAIL LINE
IMPROVEMENT PROJECT
CONTRACT NO. G67CN01

SOUTH ACTON STATION HEAD HOUSES UPPER LEVEL FRAMING PLAN

ISSUE	DATE	DESCRIPTION	BY	CHKD.	APP.

HNTB
300 APOLLO DRIVE
CHELMSFORD, MA 01824
(978) 905-4000

PROJECT MANAGER — Date 5/18/12

MASSACHUSETTS BAY TRANSPORTATION AUTHORITY
APPROVED BY:
PROJECT MANAGER — Date 6/13/12

JACOBS
343 CONGRESS STREET
BOSTON, MA 02110
(617) 242-9222

HORIZ: N/A
VERT: N/A
DATE: 5/17/12

DES. BY	DR. BY	CHK. BY
DJM	DJM	MWT

PLAN NO. 168661
SHEET S-121
ISSUE

FILE NAME: P:\MBTA\2008\E2X37860\CAD\700CADD\702STATIONS\South Acton\Structural\PS&E Submission\ 120-122_Head_Houses_Framing_Plans.dwg
PLOT DATE: May 18, 2012 - 8:23am

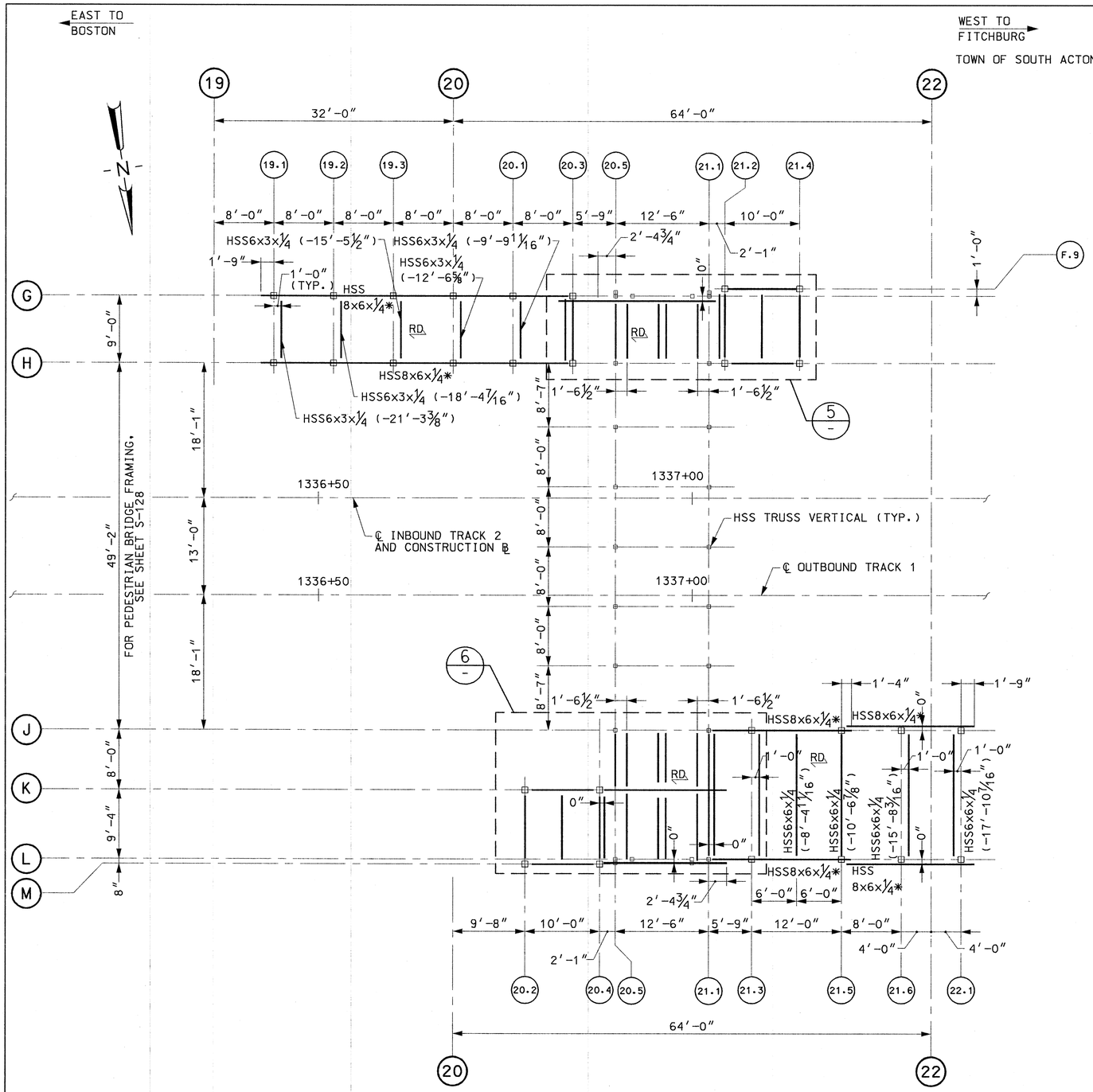

HIGH ROOF FRAMING PLAN

SCALE: 1/8" = 1'-0"

NOTES:

1. TOP OF STEEL ELEVATION IS 239.91 UNLESS OTHERWISE NOTED THUS (+/-0'-0").
2. FOR GENERAL NOTES, SEE SHEETS S-100 AND S-101.
3. GUTTER STEEL CHANNEL BEAMS NOT SHOWN FOR CLARITY. SEE ARCHITECTURAL DRAWINGS FOR LOCATIONS.
4. FOR STEEL DETAILS, SEE SHEETS S-133 THRU S-140.
5. FOR FRAME ELEVATIONS, SEE SHEETS S-123 THRU S-127.
6. ROOF CONSTRUCTION SHALL BE 1½" INCH DEEP, 18 GAUGE GALVANIZED, RIBBED ROOF PANELS.

LEGEND

RD	INDICATES ROOF DECK DIRECTION
*	SLOPED BEAM (SEE FRAME ELEVATION SHEETS FOR TOP OF BEAM)
●	SLOTTED HOLE CONNECTION (SEE SECTION AF ON SHEET S-137)

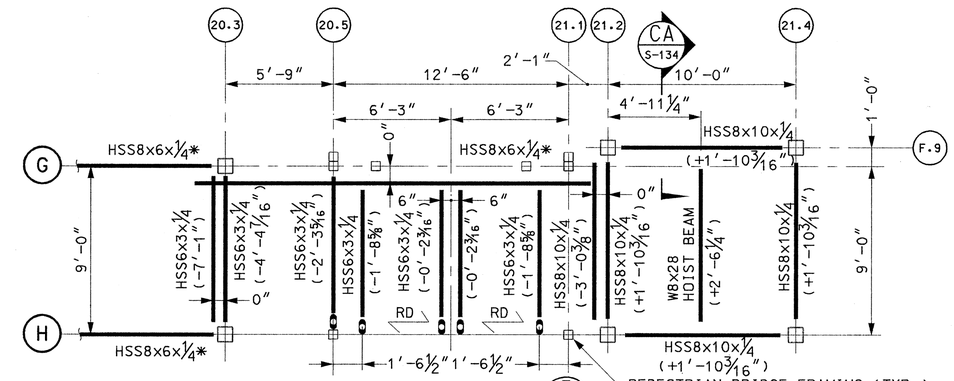

DETAIL 5

SCALE: 1/4" = 1'-0"

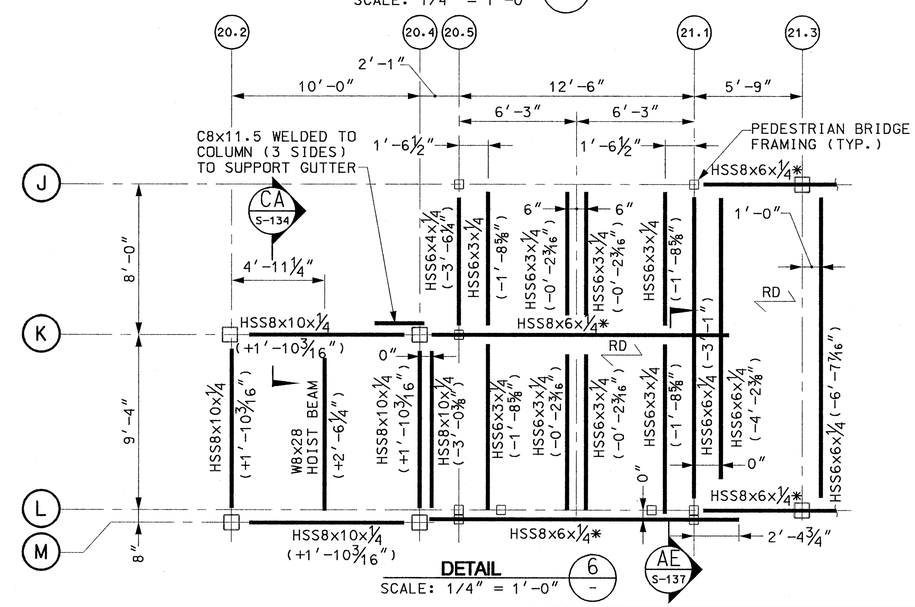

DETAIL 6

SCALE: 1/4" = 1'-0"

GREGORY T. STEFANO
STRUCTURAL
No. 36726
REGISTERED PROFESSIONAL ENGINEER
COMMONWEALTH OF MASSACHUSETTS
5/18/2012

MASSACHUSETTS BAY TRANSPORTATION AUTHORITY

FITCHBURG COMMUTER RAIL LINE
IMPROVEMENT PROJECT
CONTRACT NO. G67CN01

SOUTH ACTON STATION HEAD HOUSES HIGH ROOF FRAMING PLAN

ISSUE	DATE	DESCRIPTION	BY	CHKD.	APP.

HNTB — 300 APOLLO DRIVE, CHELMSFORD, MA 01824 (978) 905-4000 — PROJECT MANAGER 5/30/12 Date

MASSACHUSETTS BAY TRANSPORTATION AUTHORITY — APPROVED BY: PROJECT MANAGER 6/13/12 Date

JACOBS — 343 CONGRESS STREET, BOSTON, MA 02110 (617) 242-9222

HORIZ: N/A	DES. BY	DR. BY	CHK. BY	PLAN NO. 168662	ISSUE
VERT: N/A	DJM	DJM	MWT		
DATE: 5/17/12				SHEET S-122	

FILE NAME: P:\MBTA\2008\E2X37800\CAD\700CADD\702STATIONS\South Acton\Structural\PS&E Submission\ 120-122_Head_Houses_Framing_Plans.dwg
PLOT DATE: May 18, 2012 - 8:23am

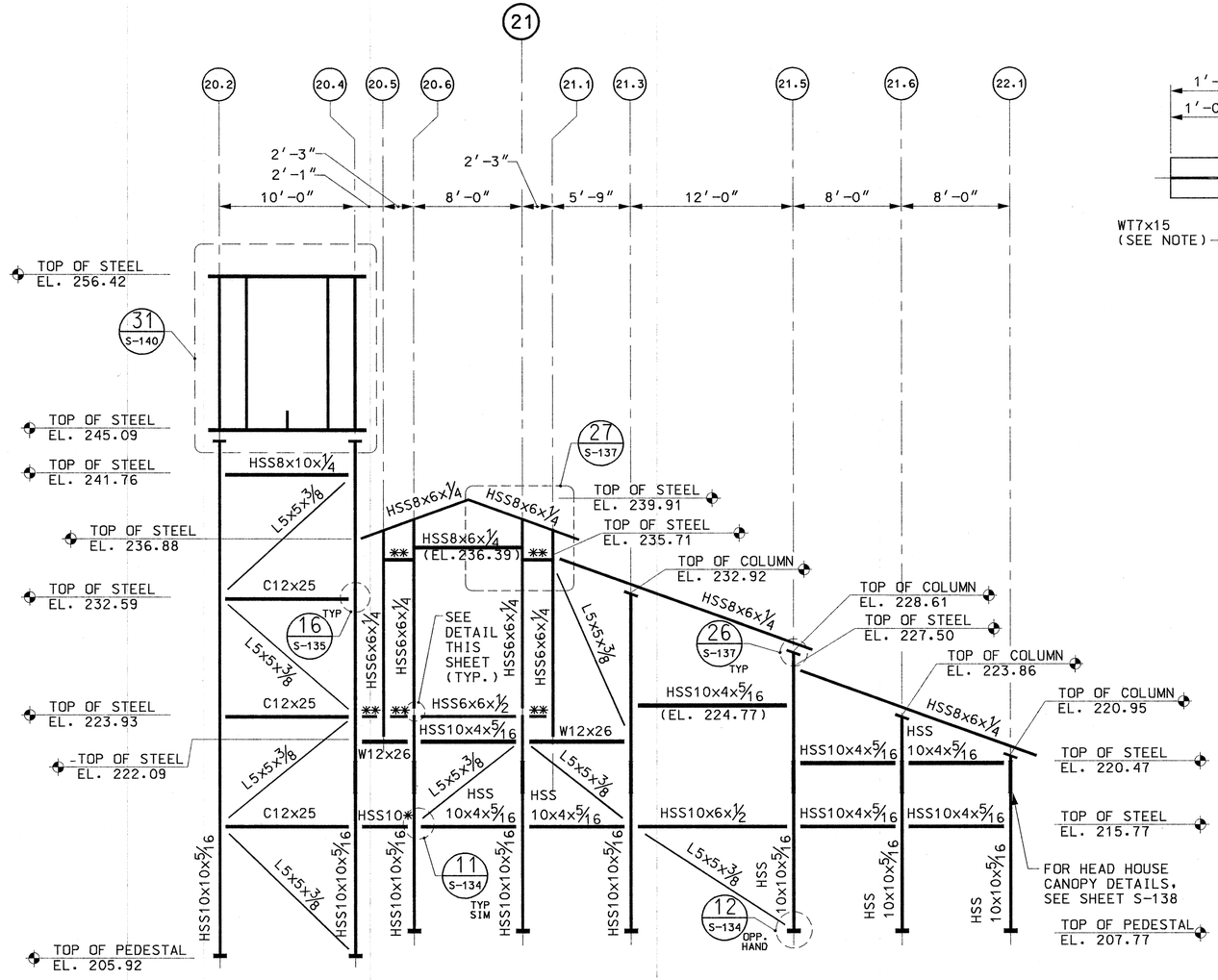

FRAME ELEVATION AT COLUMN LINES L AND M

SCALE: 3/16" = 1'-0"

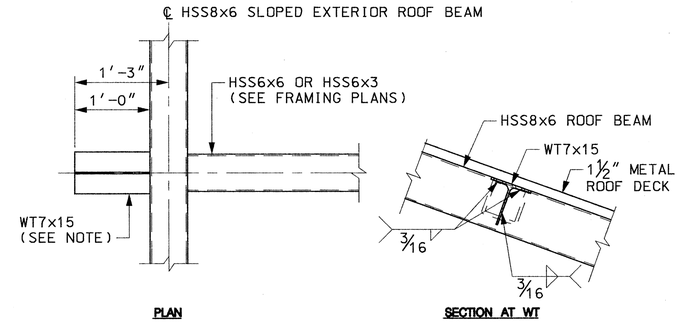

NOTE: PROVIDE WT ROOF OVERHANG SUPPORT BEAM OPPOSITE TO HSS6x3 OR HSS6X6 ROOF BEAMS AT BOTH INBOUND AND OUTBOUND HEAD HOUSES.

TYPICAL DETAIL AT ROOF OVERHANG

SCALE: 1" = 1'-0"

NOTES:

1. FOR GENERAL NOTES, SEE SHEET S-100.
2. FOR STEEL DETAILS, SEE SHEETS S-133 THRU S-140.
3. WELDED STUDS SHALL HAVE AN ULTIMATE TENSILE STRENGTH OF 115,000 PSI.

LEGEND

** INDICATES HSS6x6x1/2 BEAM

HSS10* INDICATES HSS10x4x5/16 BEAM

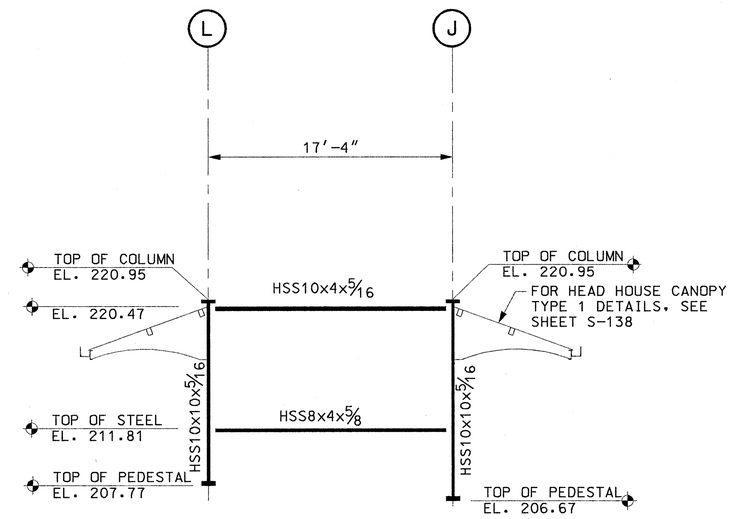

FRAME ELEVATION AT COLUMN LINE 22.1

SCALE: 3/16" = 1'-0"

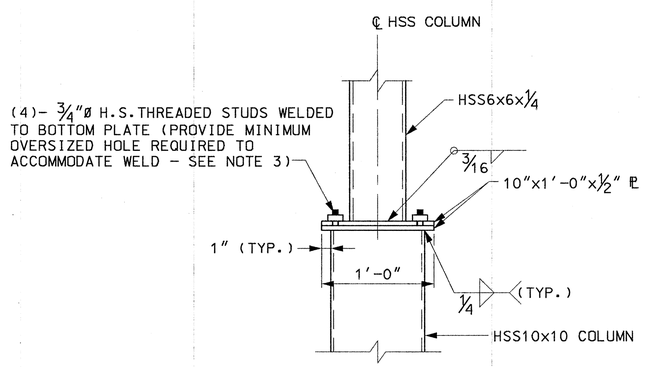

HSS6x6 COLUMN TO HSS10X10 COLUMN CONNECTION DETAIL

SCALE: 1 1/2" = 1'-0"

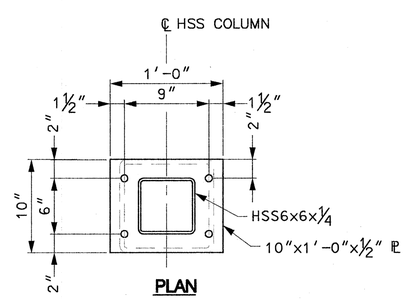

MASSACHUSETTS BAY TRANSPORTATION AUTHORITY

FITCHBURG COMMUTER RAIL LINE IMPROVEMENT PROJECT CONTRACT NO. G67CN01

SOUTH ACTON STATION HEAD HOUSES FRAME ELEVATIONS SHEET 1

COMMONWEALTH OF MASSACHUSETTS — GREGORY T. STEFANO — No. 36726 — STRUCTURAL — REGISTERED PROFESSIONAL ENGINEER — 5/18/2012

ISSUE	DATE	DESCRIPTION	BY	CHKD.	APP.

HNTB — 300 APOLLO DRIVE CHELMSFORD, MA 01824 (978) 905-4000 — PROJECT MANAGER — Date 5/30/12

MASSACHUSETTS BAY TRANSPORTATION AUTHORITY — APPROVED BY: PROJECT MANAGER — Date 6/30/12

JACOBS — 343 CONGRESS STREET BOSTON, MA 02110 (617) 242-9222

HORIZ: N/A	DES. BY	DR. BY	CHK. BY	PLAN NO. 168663	ISSUE
VERT: N/A	DJM	DJM	MWT		
DATE: 5/17/12				SHEET S-123	

FILE NAME: P:\MBTA\2008\E2X37800\CAD\700CADD\702STATIONS\South Acton\Structural\PS&E Submission\ 123-127_Head_Houses_Frame_Elevations.dwg
PLOT DATE: May 18, 2012 - 8:23am

NOTES:

1. FOR GENERAL NOTES, SEE SHEET S-100.
2. FOR STEEL DETAILS, SEE SHEETS S-133 THRU S-140.

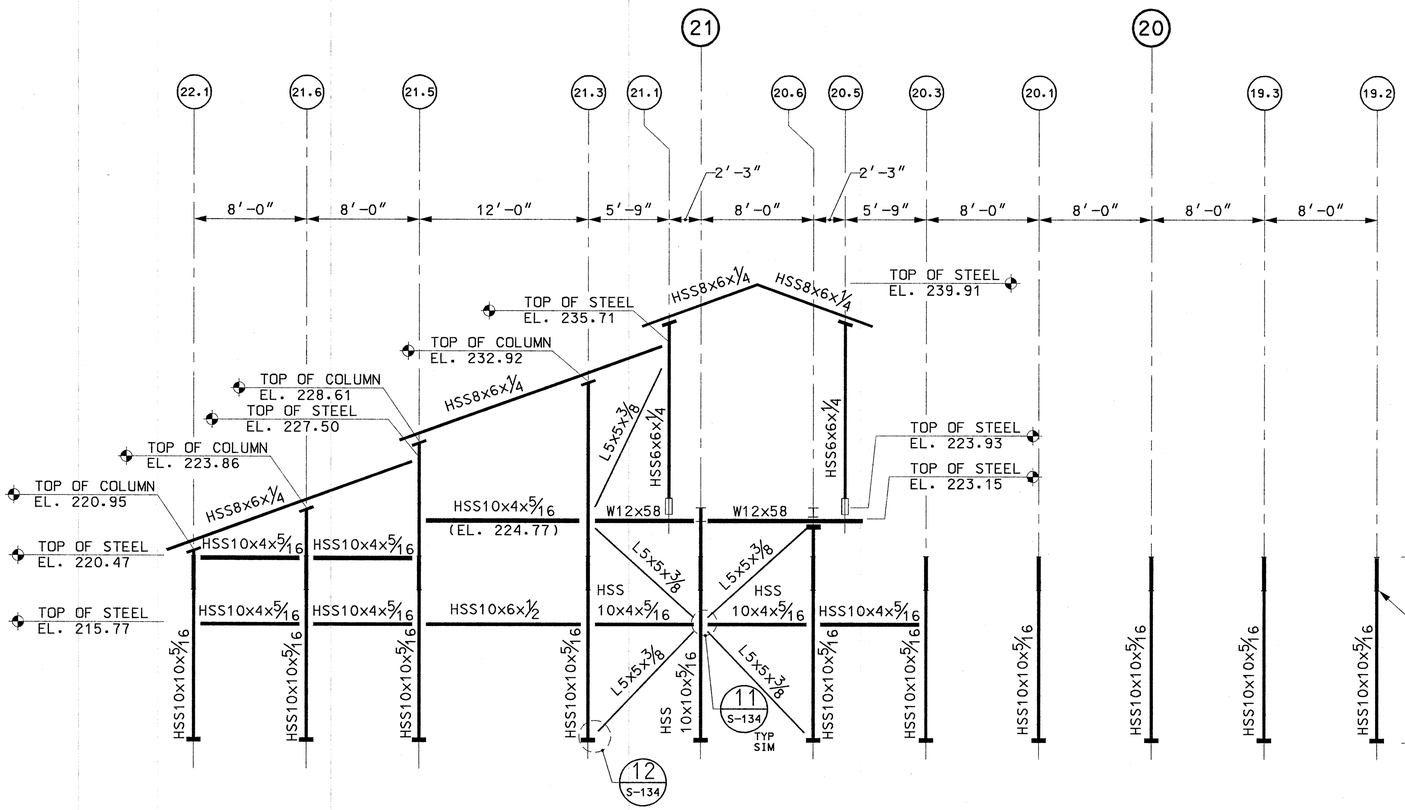

FRAME ELEVATION AT COLUMN LINE J

SCALE: 3/16" = 1'-0"

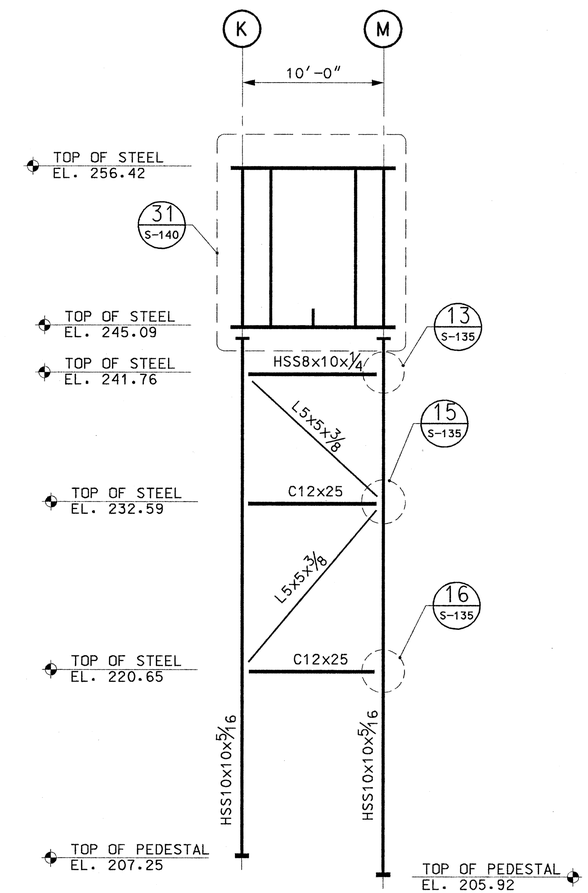

FRAME ELEVATION AT COLUMN LINE 20.2

SCALE: 3/16" = 1'-0"

COMMONWEALTH OF MASSACHUSETTS
GREGORY T. STEFANO
STRUCTURAL No. 36726 REGISTERED PROFESSIONAL ENGINEER
5/18/2012

MASSACHUSETTS BAY TRANSPORTATION AUTHORITY

FITCHBURG COMMUTER RAIL LINE
IMPROVEMENT PROJECT
CONTRACT NO. G67CN01

SOUTH ACTON STATION
HEAD HOUSES FRAME ELEVATIONS
SHEET 2

ISSUE	DATE	DESCRIPTION	BY	CHKD.	APP.

HNTB
300 APOLLO DRIVE
CHELMSFORD, MA 01824
(978) 905-4000
PROJECT MANAGER 5/30/12 Date

MASSACHUSETTS BAY TRANSPORTATION AUTHORITY
APPROVED BY:
PROJECT MANAGER 6/30/12 Date

JACOBS
343 CONGRESS STREET
BOSTON, MA 02110
(617) 242-9222

HORIZ: N/A	DES. BY	DR. BY	CHK. BY	PLAN NO. 168664	ISSUE
VERT: N/A	DJM	DJM	MWT		
DATE: 5/17/12				SHEET S-124	

FILE NAME: P:\MBTA\2008\E2X7800\CAD\700CADD\702STATIONS\South Acton\Structural\PS&E Submission\ 123-127_Head_Houses_Frame_Elevations.dwg
PLOT DATE: May 18, 2012 - 8:23am

NOTES:

1. FOR GENERAL NOTES, SEE SHEET S-100.
2. FOR STEEL DETAILS, SEE SHEETS S-133 THRU S-140.

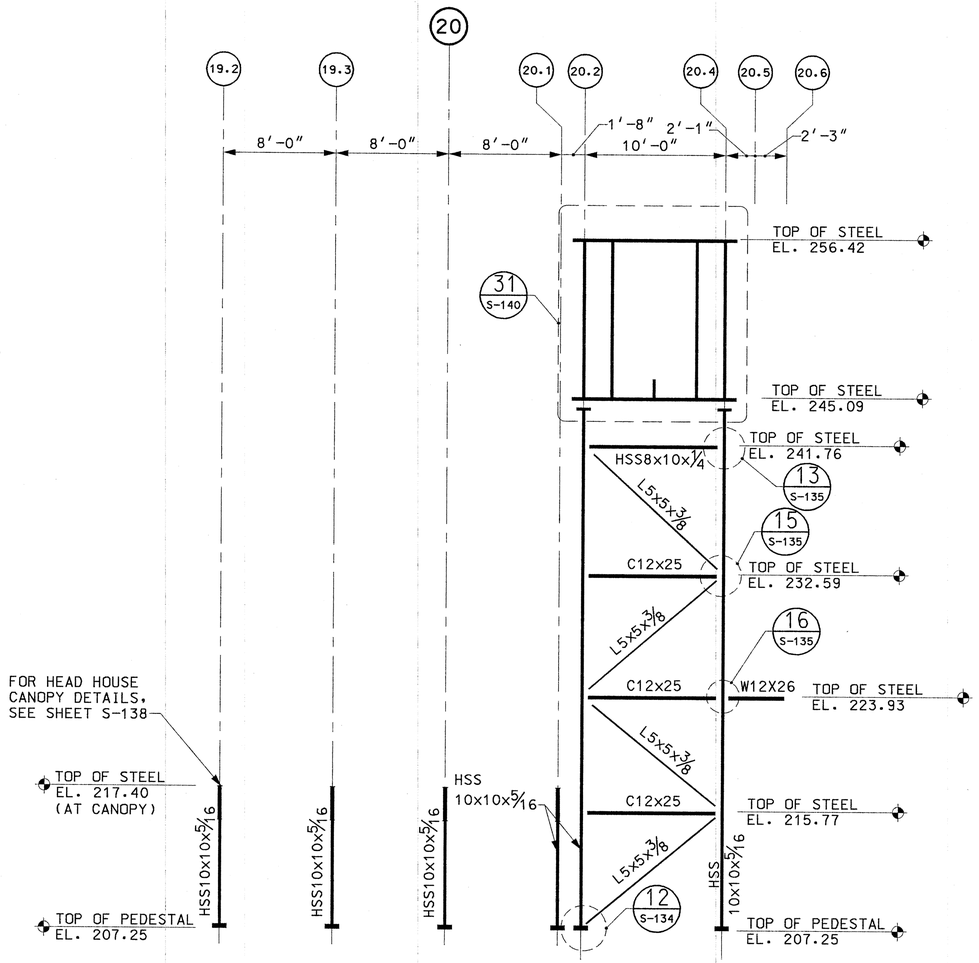

FRAME ELEVATION AT COLUMN LINE K
SCALE: 3/16" = 1'-0"

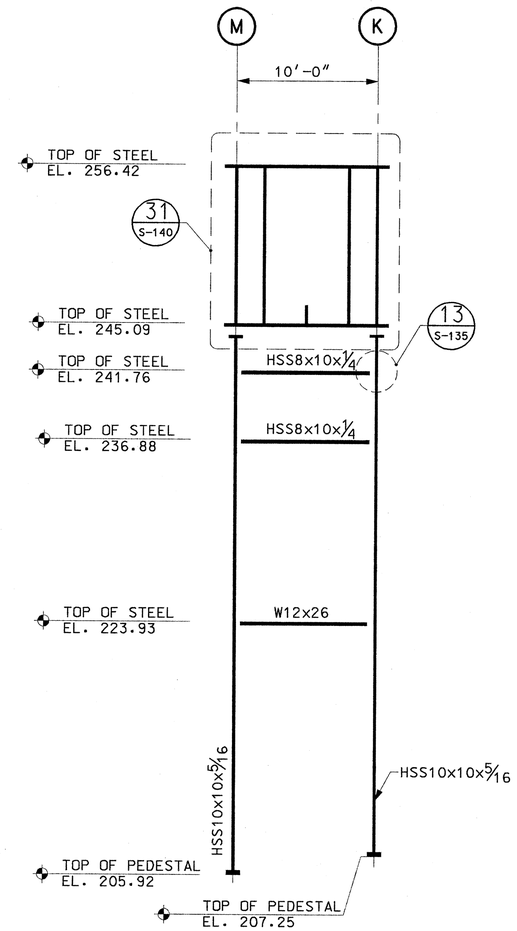

FRAME ELEVATION AT COLUMN LINE 20.4
SCALE: 3/16" = 1'-0"

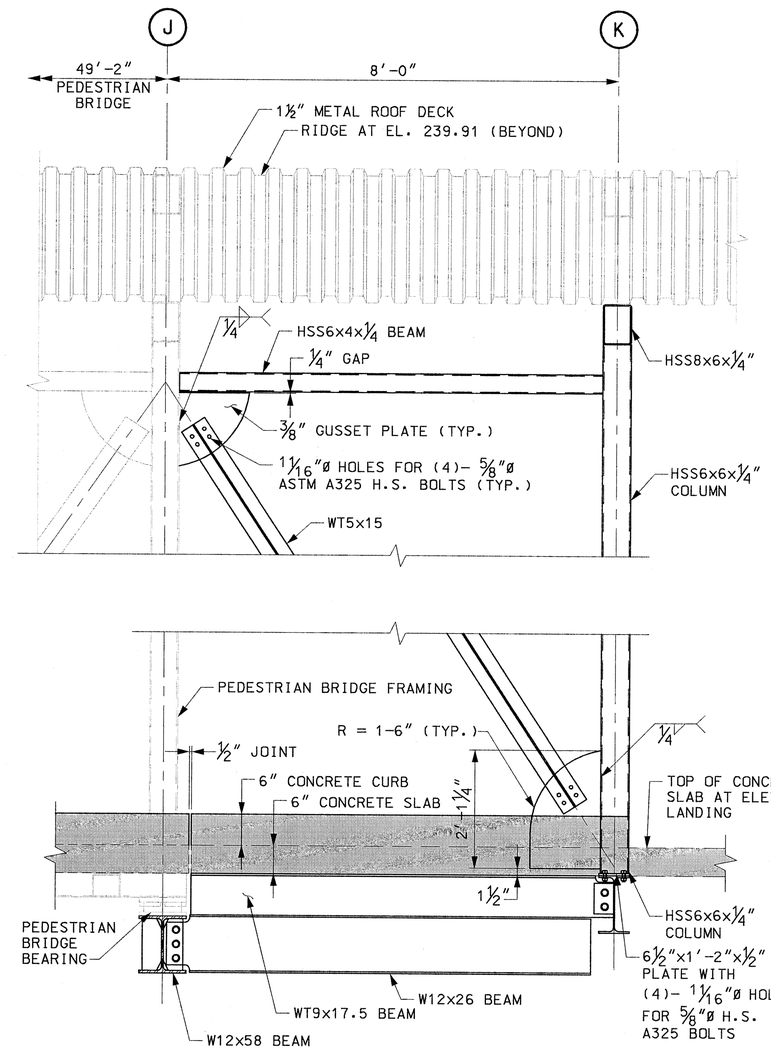

DETAIL AT COLUMN LINE 20.5 BETWEEN COLUMN LINES J AND K
SCALE: 3/4" = 1'-0"

COMMONWEALTH OF MASSACHUSETTS
GREGORY T. STEFANO
STRUCTURAL
No. 36726
REGISTERED PROFESSIONAL ENGINEER
5/18/2012

MASSACHUSETTS BAY TRANSPORTATION AUTHORITY

FITCHBURG COMMUTER RAIL LINE
IMPROVEMENT PROJECT
CONTRACT NO. G67CN01

SOUTH ACTON STATION
HEAD HOUSES FRAME ELEVATIONS
SHEET 3

ISSUE	DATE	DESCRIPTION	BY	CHKD.	APP.

HNTB
300 APOLLO DRIVE
CHELMSFORD, MA 01824
(978) 905-4000
PROJECT MANAGER 5/20/12 Date

MASSACHUSETTS BAY TRANSPORTATION AUTHORITY
APPROVED BY:
PROJECT MANAGER 6/30/12 Date

JACOBS
343 CONGRESS STREET
BOSTON, MA 02110
(617) 242-9222

HORIZ: N/A	DES. BY	DR. BY	CHK. BY	PLAN NO. 168665	ISSUE
VERT: N/A	DJM	DJM	MWT		
DATE: 5/17/12				SHEET S-125	

FILE NAME: P:\MBTA\2008\E2X37800\CAD\700CADD\702STATIONS\South Acton\Structural\PS&E Submission\ 123-127_Head_Houses_Frame_Elevations.dwg
PLOT DATE: May 18, 2012 - 8:23am

NOTES:

1. FOR GENERAL NOTES, SEE SHEET S-100.
2. FOR STEEL DETAILS, SEE SHEETS S-133 THRU S-140.

LEGEND

** INDICATES HSS6x6x½ BEAM

HSS10* INDICATES HSS10x4x5/16 BEAM

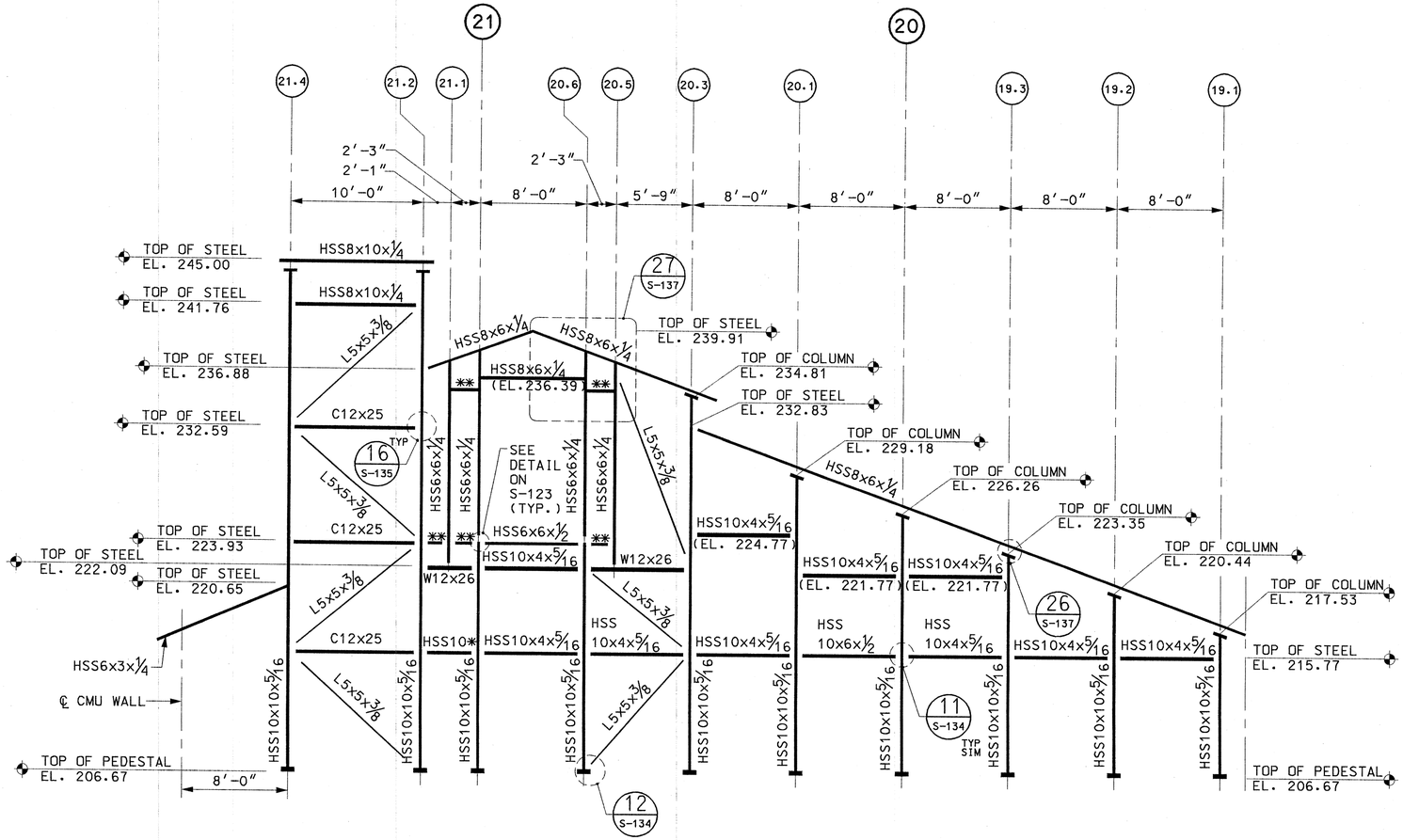

FRAME ELEVATION AT COLUMN LINES F.9 AND G

SCALE: 3/16" = 1'-0"

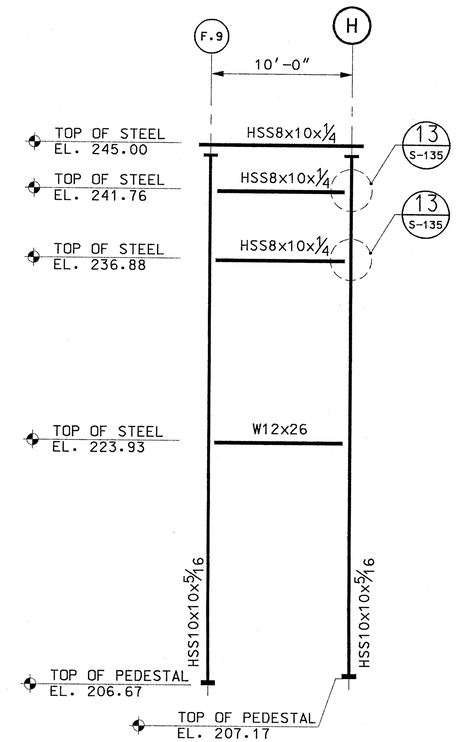

FRAME ELEVATION AT COLUMN LINE 21.2

SCALE: 3/16" = 1'-0"

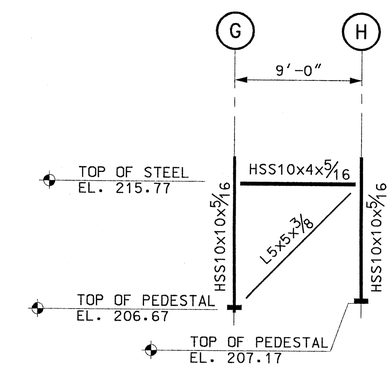

FRAME ELEVATION AT COLUMN LINE 19.1

SCALE: 3/16" = 1'-0"

COMMONWEALTH OF MASSACHUSETTS
GREGORY T. STEFANO
STRUCTURAL
No. 36726
REGISTERED PROFESSIONAL ENGINEER
5/18/2012

MASSACHUSETTS BAY TRANSPORTATION AUTHORITY

FITCHBURG COMMUTER RAIL LINE
IMPROVEMENT PROJECT
CONTRACT NO. G67CN01

SOUTH ACTON STATION
HEAD HOUSES FRAME ELEVATIONS
SHEET 4

ISSUE	DATE	DESCRIPTION	BY	CHKD.	APP.

HNTB
300 APOLLO DRIVE
CHELMSFORD, MA 01824
(978) 905-4000

PROJECT MANAGER 5/30/12 Date

MASSACHUSETTS BAY TRANSPORTATION AUTHORITY
APPROVED BY:
PROJECT MANAGER 6/30/12 Date

JACOBS
343 CONGRESS STREET
BOSTON, MA 02110
(617) 242-9222

HORIZ: N/A	DES. BY	DR. BY	CHK. BY	PLAN NO. 168666
VERT: N/A	DJM	DJM	MWT	
DATE: 5/17/12				SHEET S-126

ISSUE

FILE NAME: P:\MBTA\2008\E2X37800\CAD\700CADD\702STATIONS\South Acton\Structural\PS&E Submission\ 123-127_Head_Houses_Frame_Elevations.dwg
PLOT DATE: May 21, 2012 – 1:35pm

NOTES:

1. FOR GENERAL NOTES, SEE SHEET S-100.
2. FOR STEEL DETAILS, SEE SHEETS S-133 THRU S-140.

LEGEND

HSS10* INDICATES HSS10x4x5/16 BEAM

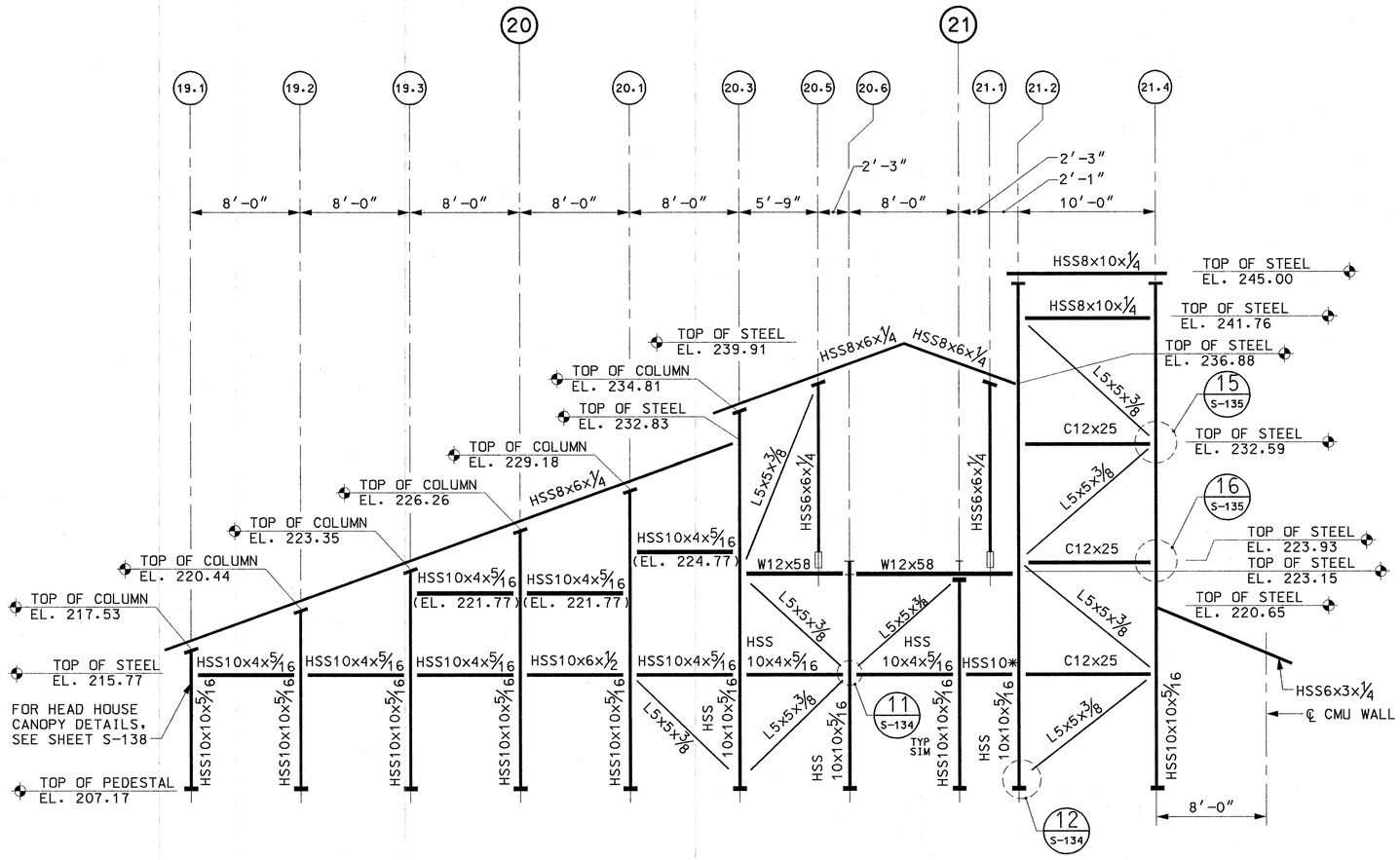

FRAME ELEVATION AT COLUMN LINE H

SCALE: 3/16" = 1'-0"

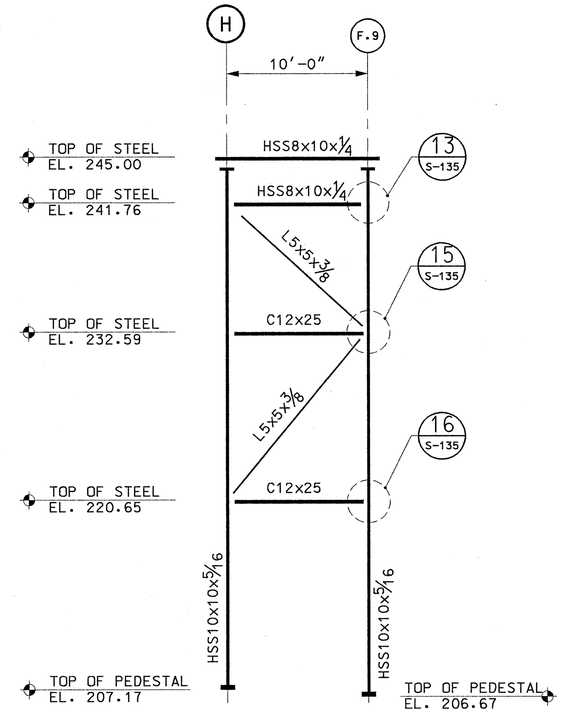

FRAME ELEVATION AT COLUMN LINE 21.4

SCALE: 3/16" = 1'-0"

COMMONWEALTH OF MASSACHUSETTS
GREGORY T. STEFANO
STRUCTURAL No. 36728
REGISTERED PROFESSIONAL ENGINEER
5/18/2012

MASSACHUSETTS BAY TRANSPORTATION AUTHORITY

FITCHBURG COMMUTER RAIL LINE
IMPROVEMENT PROJECT
CONTRACT NO. G67CN01

SOUTH ACTON STATION
HEAD HOUSES FRAME ELEVATIONS
SHEET 5

ISSUE	DATE	DESCRIPTION	BY	CHKD.	APP.

HNTB
300 APOLLO DRIVE
CHELMSFORD, MA 01824
(978) 905-4000
PROJECT MANAGER 5/30/12 Date

MASSACHUSETTS BAY TRANSPORTATION AUTHORITY
APPROVED BY:
PROJECT MANAGER 6/30/12 Date

JACOBS
343 CONGRESS STREET
BOSTON, MA 02110
(617) 242-9222

HORIZ: N/A	DES. BY	DR. BY	CHK. BY	PLAN NO. 168667	ISSUE
VERT: N/A	DJM	DJM	MWT		
DATE: 5/17/12				SHEET S-127	

FILE NAME: P:\MBTA\2008\E2X37800\CAD\700CADD\702STATIONS\South Acton\Structural\PS&E Submission\ 123-127_Head_Houses_Frame_Elevations.dwg
PLOT DATE: May 21, 2012 - 1:56pm

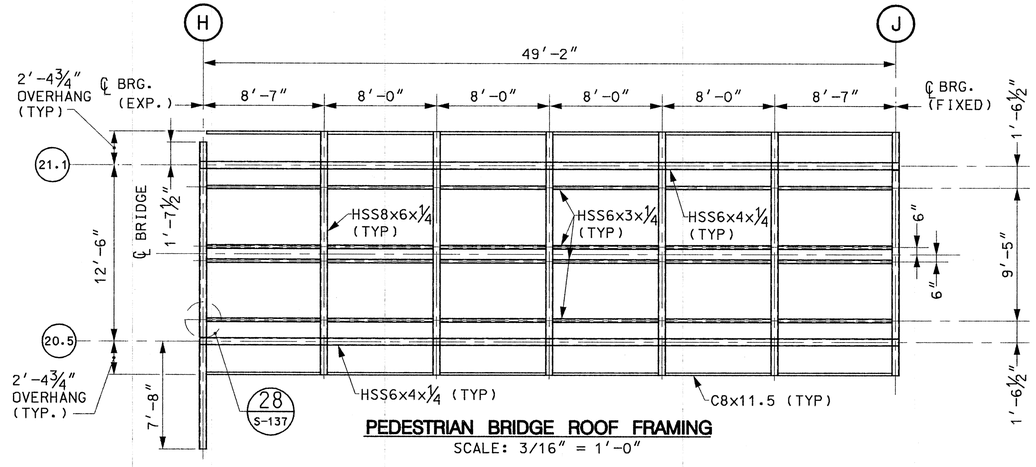

PEDESTRIAN BRIDGE ROOF FRAMING
SCALE: 3/16" = 1'-0"

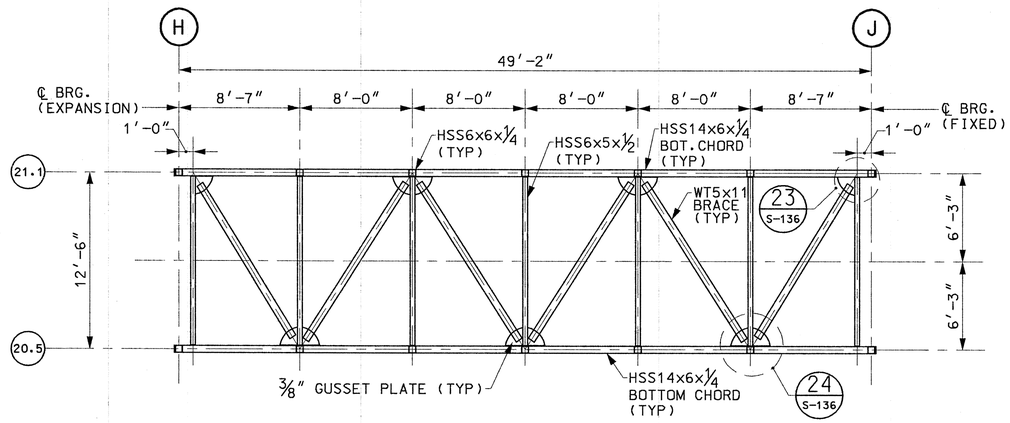

PEDESTRIAN BRIDGE DECK FRAMING
SCALE: 3/16" = 1'-0"

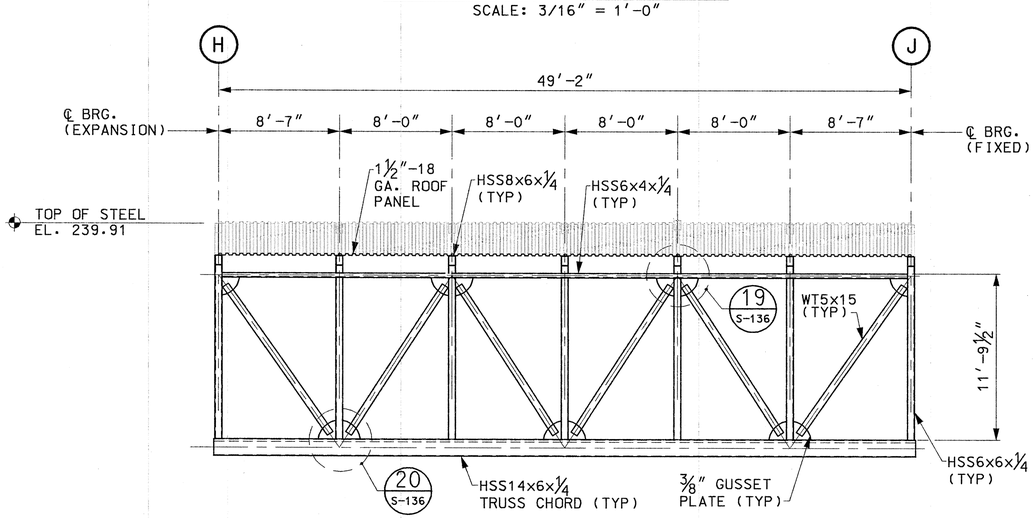

TYPICAL PEDESTRIAN BRIDGE SECTION AT TRUSS FRAME
SCALE: 3/16" = 1'-0"

NOTES:

1. FOR GENERAL NOTES, SEE SHEET S-100.
2. FOR TRUSS BEARING DETAILS, SEE SHEET S-129.
3. FOR STEEL DETAILS, SEE SHEETS S-133 THRU S-140.
4. ALL STEEL ELEMENTS SHALL BE HOT-DIP GALVANIZED UNLESS OTHERWISE NOTED.

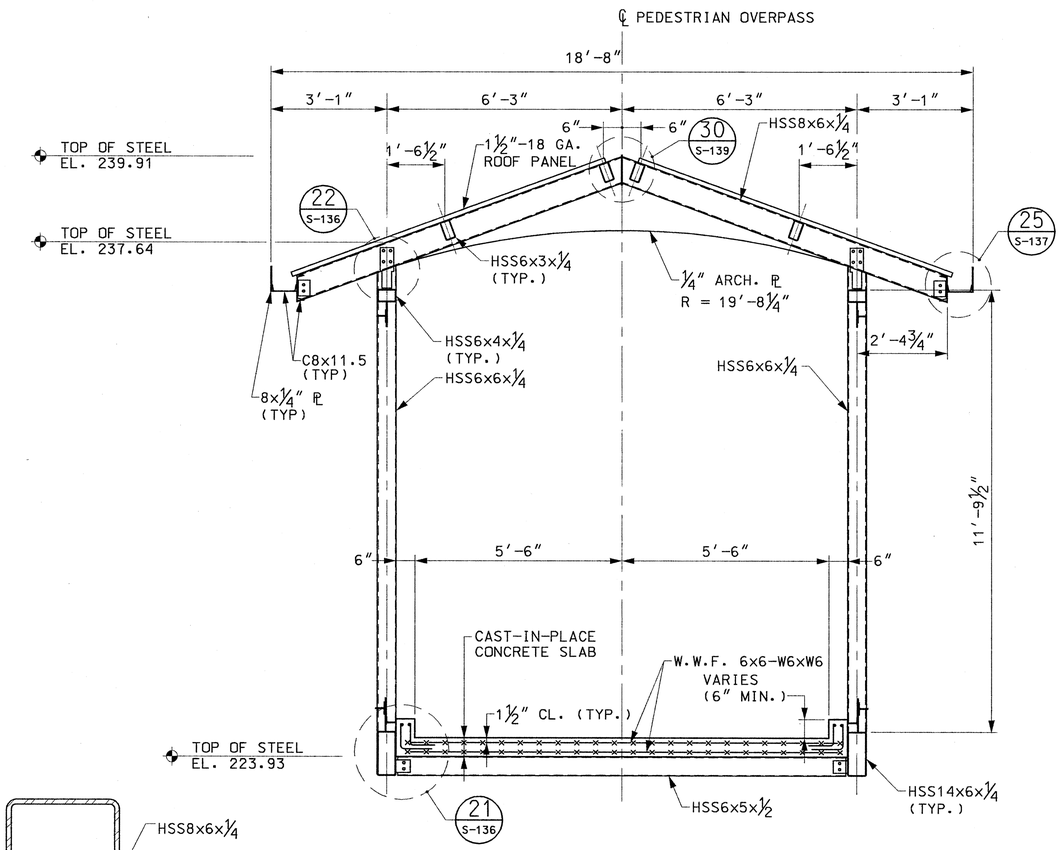

TYPICAL PEDESTRIAN BRIDGE SECTION
SCALE: 1/2" = 1'-0"

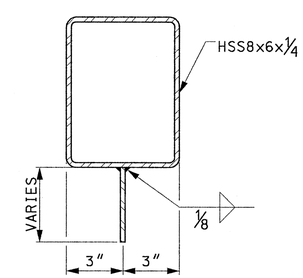

NOTE:
ARCHITECTURAL PLATE TO BE NOTCHED AT PEAK TO MAINTAIN A MINIMUM CLEAR OF ⅛" FROM RIDGE PLATE.

TYPICAL ARCHITECTURAL PLATE DETAIL
NOT TO SCALE

COMMONWEALTH OF MASSACHUSETTS
GREGORY T. STEFANO
STRUCTURAL
No. 36726
REGISTERED PROFESSIONAL ENGINEER
5/18/2012

MASSACHUSETTS BAY TRANSPORTATION AUTHORITY

FITCHBURG COMMUTER RAIL LINE
IMPROVEMENT PROJECT
CONTRACT NO. G67CN01

SOUTH ACTON STATION
PEDESTRIAN BRIDGE FRAMING
AND SECTIONS

ISSUE	DATE	DESCRIPTION	BY	CHKD.	APP.

HNTB
300 APOLLO DRIVE
CHELMSFORD, MA 01824
(978) 905-4000

PROJECT MANAGER 5/30/12 Date

MASSACHUSETTS BAY TRANSPORTATION AUTHORITY
APPROVED BY:
PROJECT MANAGER 6/30/12 Date

JACOBS
343 CONGRESS STREET
BOSTON, MA 02110
(617) 242-9222

	DES. BY	DR. BY	CHK. BY
HORIZ: N/A	DJM	DJM	MWT
VERT: N/A			
DATE: 5/17/12			

PLAN NO. 168668
SHEET S-128
ISSUE

FILE NAME: P:\MBTA\2008\E2X37800\CAD\700CADD\702STATIONS\South Acton\Structural\PS&E Submission\ 128_Ped_Bridge_Plans_Secs.dwg
PLOT DATE: May 18, 2012 – 8:23am

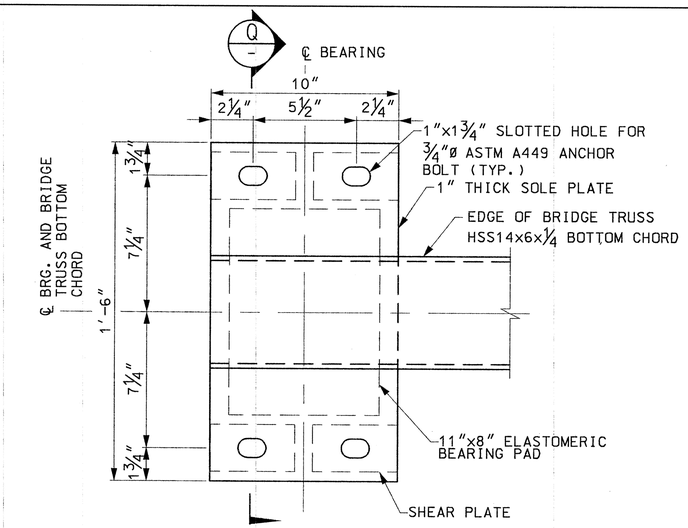

EXPANSION BEARING – PLAN

SCALE: 3" = 1'-0"

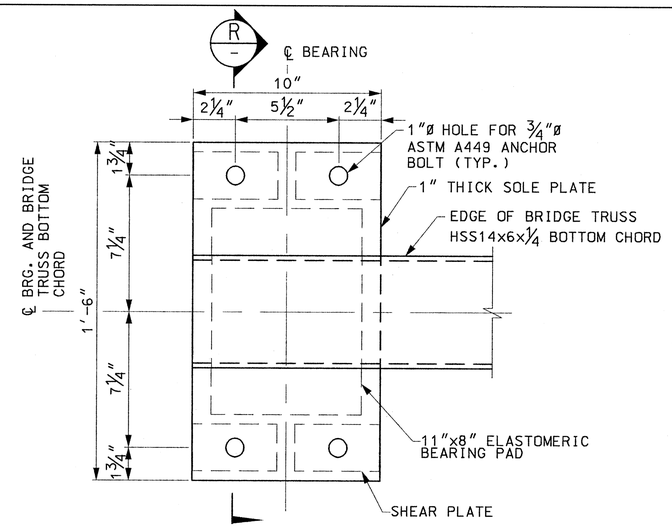

FIXED BEARING – PLAN

SCALE: 3" = 1'-0"

NOTES:

1. STEEL SOLE PLATE AND SHEAR PLATES SHALL CONFORM TO AASHTO M270 GRADE 36 AND SHALL BE HOT-DIP GALVANIZED.
2. STEEL LAMINATES SHALL CONFORM TO ASTM A 1011 GRADE 36.
3. PLACE SOLE PLATE ASSEMBLY SO THAT IT IS CENTERED AROUND ANCHOR BOLTS. CENTER THE ELASTOMERIC PAD UNDER THE SOLE PLATE.
4. ELASTOMER IN ALL BEARINGS SHALL HAVE GRADE 60 DUROMETER HARDNESS.
5. PAD SHALL BE VULCANIZED TO THE BOTTOM AND SOLE PLATES IN THE SHOP.
6. TRUSS SHALL BE ERECTED WHEN AMBIENT TEMPERATURE IS BETWEEN 50°F AND 77°F. IF THE TRUSS IS ERECTED AT A TEMPERATURE OUTSIDE OF THIS RANGE, THE BRIDGE SHALL BE JACKED TO ALLOW FOR RE-CENTERING OF THE SOLE PLATE ASSEMBLY AND ELASTOMERIC BEARINGS WHEN THE TEMPERATURE RETURNS TO THAT RANGE.
7. AFTER THE SOLE PLATE ASSEMBLY IS IN ITS FINAL POSITION, WELD TRUSS CHORD (HSS14x6) BOTTOM FLANGE TO SOLE PLATE.
8. ANCHOR BOLTS SHALL CONFORM TO ASTM A449. ANCHOR BOLTS, NUTS AND WASHERS SHALL BE HOT-DIP GALVANIZED IN ACCORDANCE WITH ASTM A153.
9. GALVANIZED SURFACES DAMAGED BY WELDING OR ERECTION OPERATIONS SHALL BE REPAIRED BY APPLICATION OF AN ORGANIC ZINC RICH PRIMER.

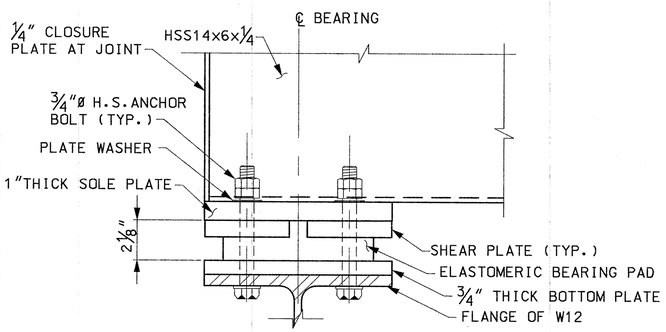

EXPANSION BEARING – ELEVATION

SCALE: 3" = 1'-0"

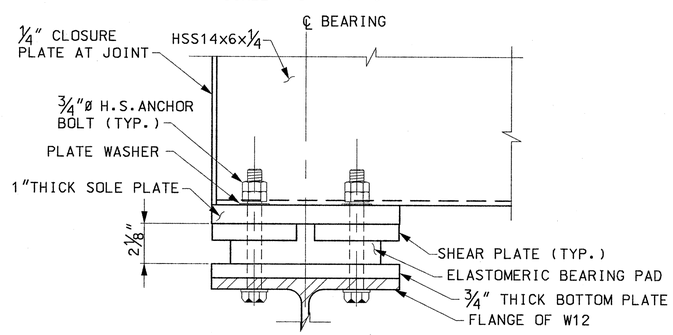

FIXED BEARING – ELEVATION

SCALE: 3" = 1'-0"

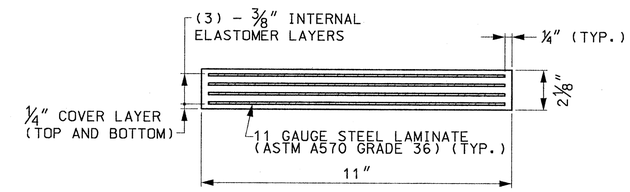

ELASTOMERIC BEARING PAD

SCALE: N.T.S

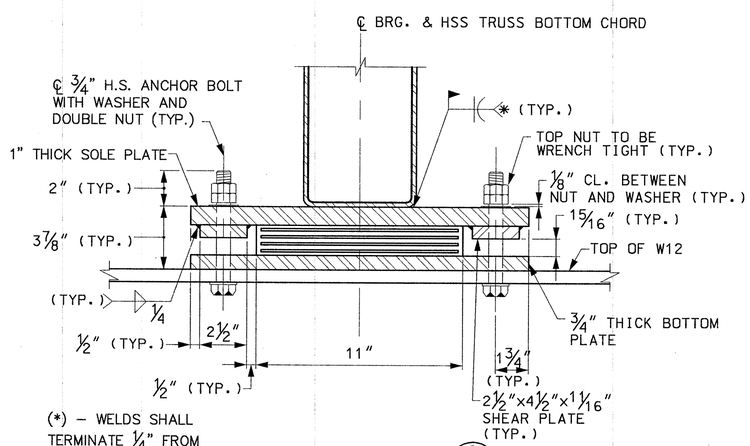

SECTION Q

SCALE: 3" = 1'-0"

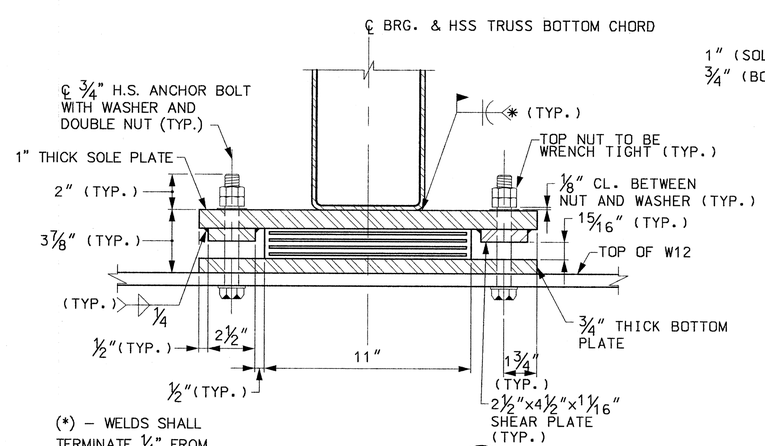

SECTION R

SCALE: 3" = 1'-0"

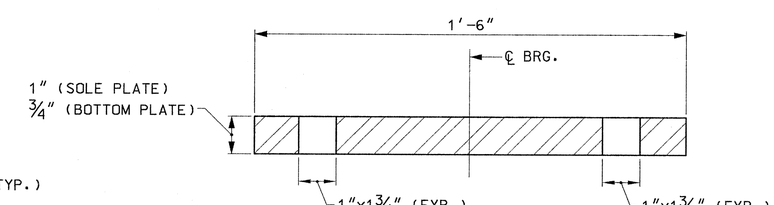

SOLE PLATE AND BOTTOM PLATE DETAIL

SCALE: N.T.S.

COMMONWEALTH OF MASSACHUSETTS — GREGORY T. STEFANO — STRUCTURAL No. 36726 — REGISTERED PROFESSIONAL ENGINEER — 5/18/2012

MASSACHUSETTS BAY TRANSPORTATION AUTHORITY

FITCHBURG COMMUTER RAIL LINE IMPROVEMENT PROJECT CONTRACT NO. G67CN01

SOUTH ACTON STATION PEDESTRIAN BRIDGE BEARING DETAILS

ISSUE	DATE	DESCRIPTION	BY	CHKD.	APP.

HNTB — 300 APOLLO DRIVE CHELMSFORD, MA 01824 (978) 905-4000 — PROJECT MANAGER — Date 5/30/12

MASSACHUSETTS BAY TRANSPORTATION AUTHORITY — APPROVED BY: PROJECT MANAGER — Date 6/30/12

JACOBS — 343 CONGRESS STREET BOSTON, MA 02110 (617) 242-9222

HORIZ: N/A	DES. BY	DR. BY	CHK. BY	PLAN NO. 168669	ISSUE
VERT: N/A	DJM	DJM	MWT		
DATE: 5/17/12				SHEET S-129	

FILE NAME: P:\MBTA\2008\E2X3780\CAD\700CAD\702STATIONS\South Acton\Structural\PS&E Submission\ 129_Ped_Bridge_Bearing_Dets.dwg
PLOT DATE: May 18, 2012 – 8:23am

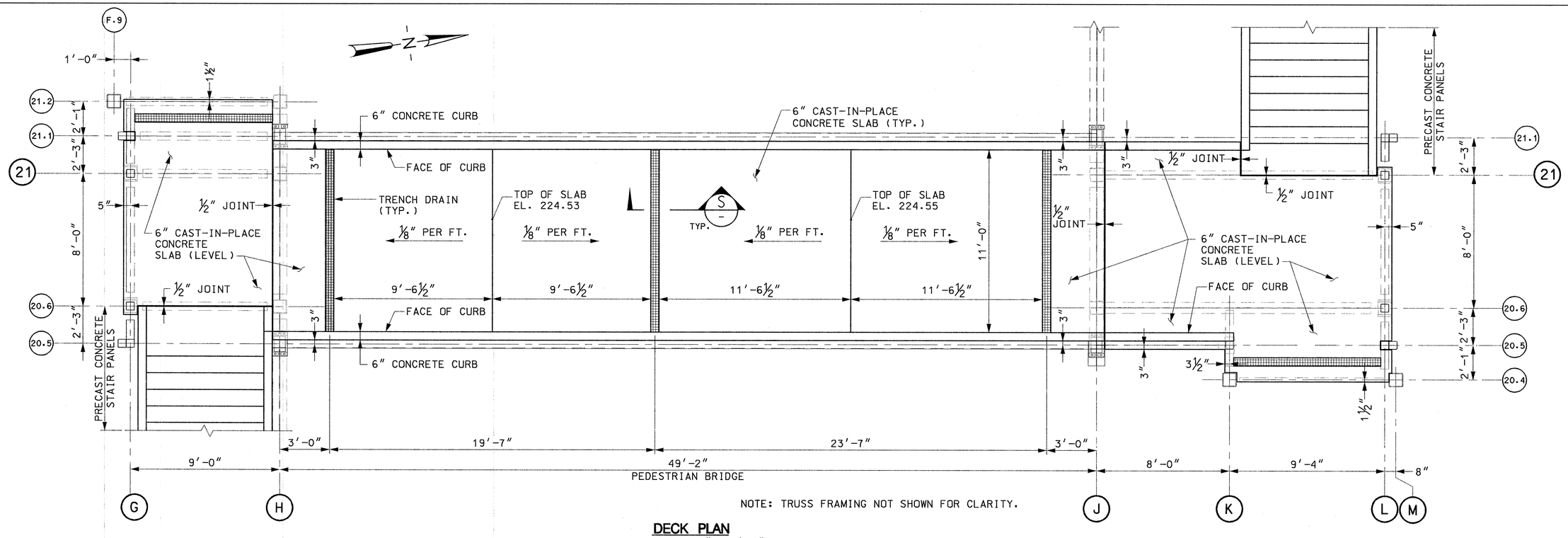

NOTE: TRUSS FRAMING NOT SHOWN FOR CLARITY.

DECK PLAN
SCALE: 5/16" = 1'-0"

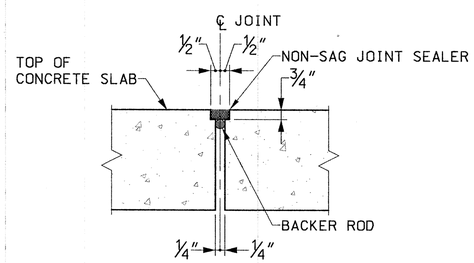

TYPICAL JOINT DETAIL
SCALE: 3" = 1'-0"

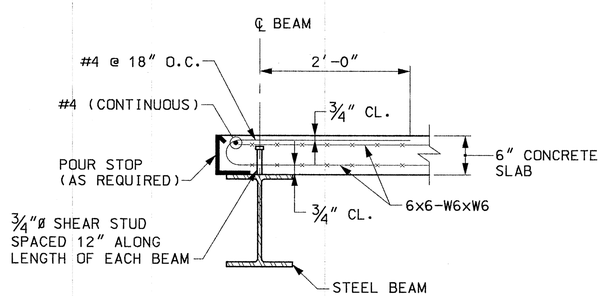

EDGE OF DECK DETAIL
NOT TO SCALE

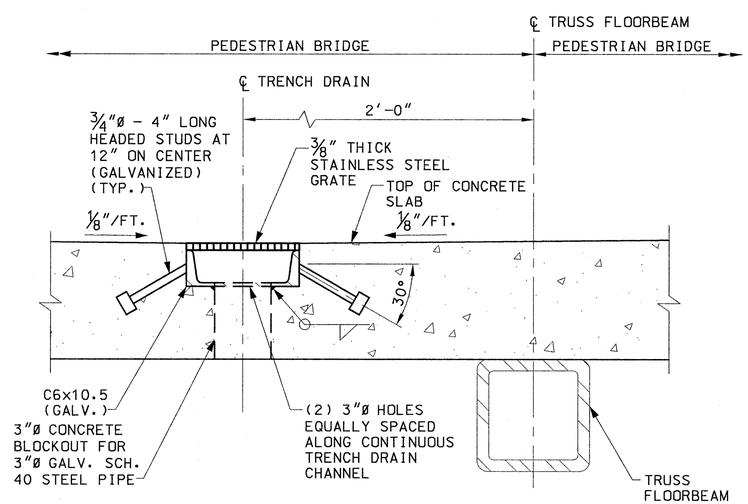

SECTION S/-
SCALE: 3" = 1'-0"

NOTES:

1. FOR GENERAL NOTES, SEE SHEETS S-100 AND S-101.
2. TOP OF SLAB ELEVATION SHALL BE 224.43 UNLESS NOTED OTHERWISE.
3. FOR PRECAST CONCRETE STAIR DETAILS, SEE SHEET S-131.

COMMONWEALTH OF MASSACHUSETTS — GREGORY T. STEFANO — STRUCTURAL No. 36726 — REGISTERED PROFESSIONAL ENGINEER
5/18/2012

MASSACHUSETTS BAY TRANSPORTATION AUTHORITY

FITCHBURG COMMUTER RAIL LINE
IMPROVEMENT PROJECT
CONTRACT NO. G67CN01

SOUTH ACTON STATION
HEAD HOUSES DECK PLAN
AND DETAILS

ISSUE	DATE	DESCRIPTION	BY	CHKD.	APP.

HNTB — 300 APOLLO DRIVE CHELMSFORD, MA 01824 (978) 905-4000
PROJECT MANAGER — Date 5/30/12

MASSACHUSETTS BAY TRANSPORTATION AUTHORITY
APPROVED BY: PROJECT MANAGER — Date 6/30/12

JACOBS — 343 CONGRESS STREET BOSTON, MA 02110 (617) 242-9222

HORIZ: N/A	DES. BY	DR. BY	CHK. BY	PLAN NO. 167670	ISSUE
VERT: N/A	DJM	DJM	MWT		
DATE: 5/17/12				SHEET S-130	

FILE NAME: P:\MBTA\2008\E2X37800\CAD\700CADD\702STATIONS\South Acton\Structural\PS&E Submission\ 130_Head_Houses_Deck_Plan.dwg
PLOT DATE: May 18, 2012 - 8:23am

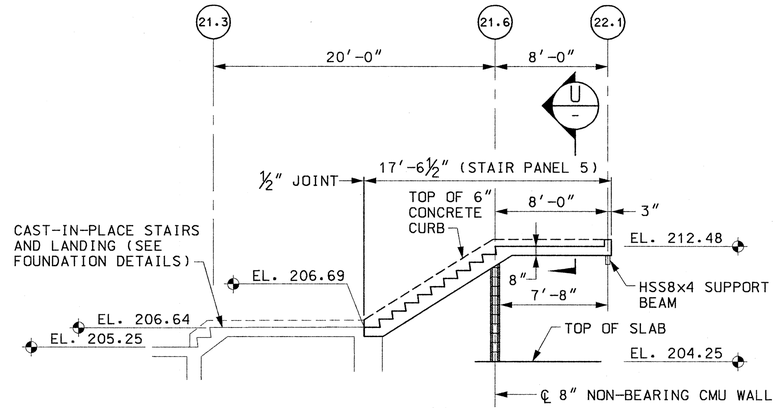

NOTES:

1. FOR GENERAL NOTES, SEE SHEET S-100.
2. ANCHORS SHALL HAVE A MINIMUM EMBEDMENT LENGTH OF 6" AND SHALL BE TYPE 316 STAINLESS STEEL.
3. FOR PRECAST STAIR SUPPORT BEAM LOCATIONS, SEE FRAMING PLANS

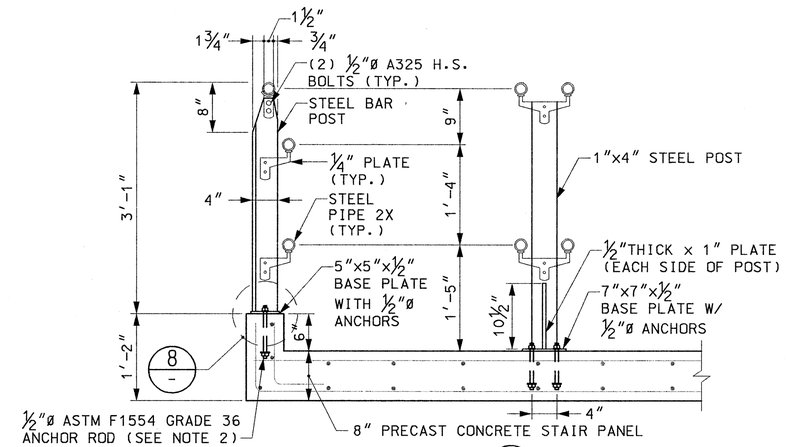

DETAIL 7 / -
SCALE: 1" = 1'-0"

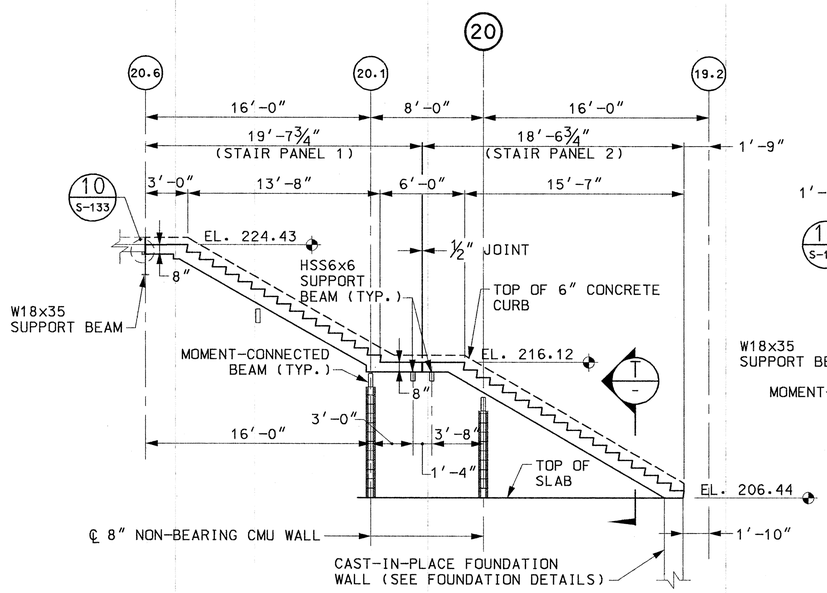

PRECAST STAIR ELEVATION AT INBOUND HEAD HOUSE
SCALE: 3/16" = 1'-0"

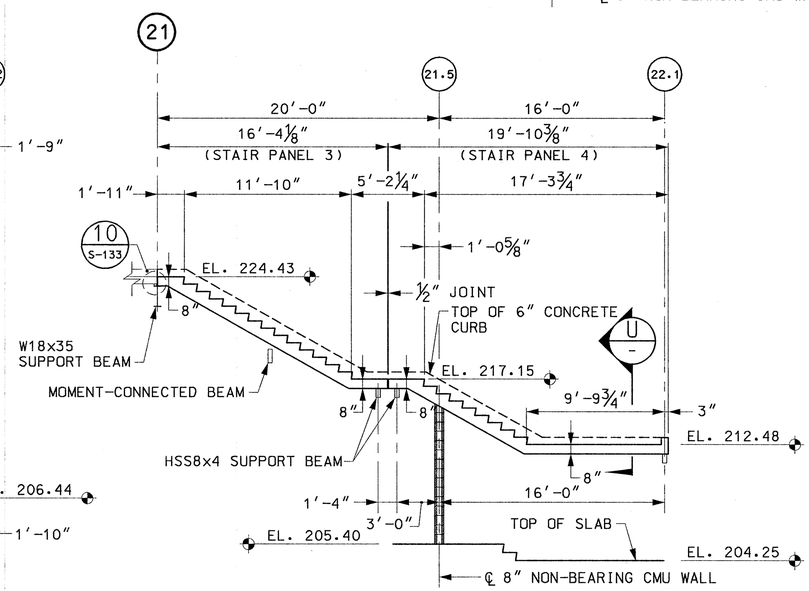

PRECAST STAIR ELEVATION AT OUTBOUND HEAD HOUSE
SCALE: 3/16" = 1'-0"

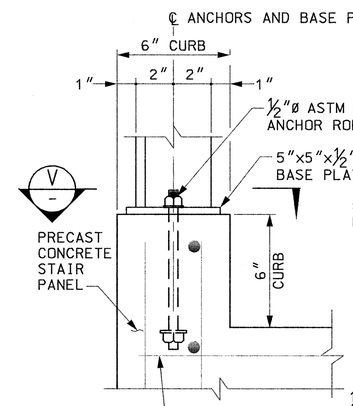

DETAIL 8 / -
SCALE: 3" = 1'-0"

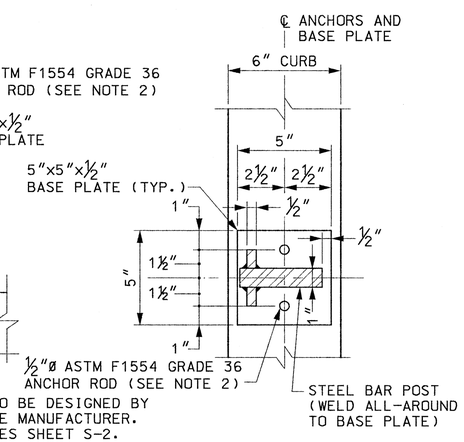

SECTION V / -
SCALE: 3" = 1'-0"

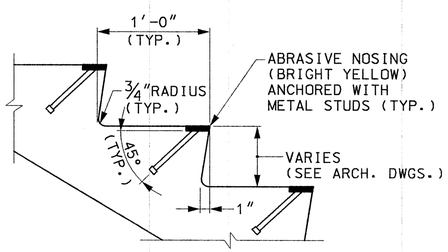

TYPICAL STAIR TREAD DETAIL
SCALE: 1 1/2" = 1'-0"

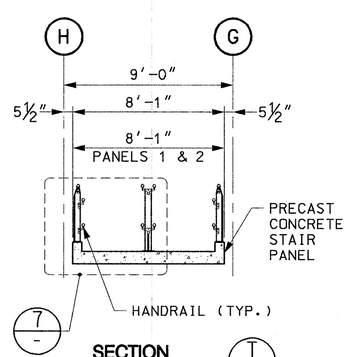

SECTION T / -
SCALE: 1/4" = 1'-0"

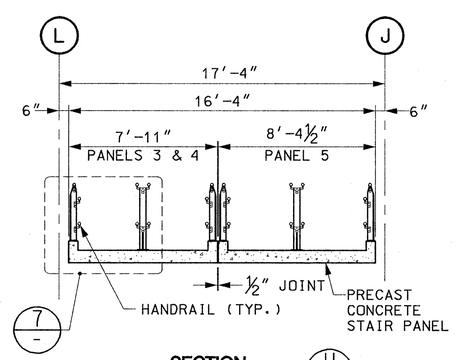

SECTION U / -
SCALE: 1/4" = 1'-0"

COMMONWEALTH OF MASSACHUSETTS
GREGORY T. STEFANO
STRUCTURAL
No. 36726
REGISTERED PROFESSIONAL ENGINEER
5/18/2012

MASSACHUSETTS BAY TRANSPORTATION AUTHORITY

FITCHBURG COMMUTER RAIL LINE
IMPROVEMENT PROJECT
CONTRACT NO. G67CN01

SOUTH ACTON STATION HEAD HOUSES PRECAST STAIRS ELEVATIONS AND DETAILS

ISSUE	DATE	DESCRIPTION	BY	CHKD.	APP.

HNTB — 300 APOLLO DRIVE, CHELMSFORD, MA 01824 (978) 905-4000
PROJECT MANAGER — Date 5/30/12

MASSACHUSETTS BAY TRANSPORTATION AUTHORITY
APPROVED BY: PROJECT MANAGER — Date 6/30/12

JACOBS — 343 CONGRESS STREET BOSTON, MA 02110 (617) 242-9222

	DES. BY	DR. BY	CHK. BY
HORIZ: N/A	DJM	DJM	MWT
VERT: N/A			
DATE: 5/17/12			

PLAN NO. 168671
SHEET S-131
ISSUE

FILE NAME: P:\MBTA\2008\E2X37800\CAD\700CADD\702STATIONS\South Acton\Structural\PS&E Submission\ 131_Head_Houses_Precast_Stairs_Dets.dwg
PLOT DATE: May 18, 2012 – 8:24am

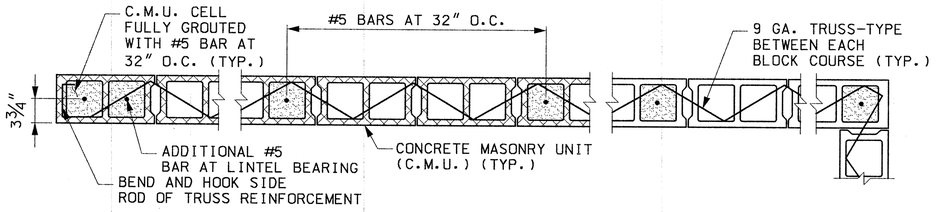

8" AND 10" THICK MASONRY WALL REINFORCING SCHEDULE

NOT TO SCALE

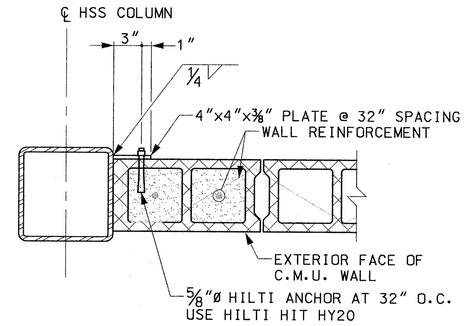

TYPICAL C.M.U.-COLUMN CONNECTION DETAIL

NOT TO SCALE

NOTES:

1. FOR GENERAL NOTES, SEE SHEETS S-100 AND S-101.
2. FOR LOCATIONS OF CONCRETE MASONRY WALLS AND ADDITIONAL DETAILS, SEE ARCHITECTURAL DRAWINGS.
3. COMPRESSIBLE FILLER SHALL BE INSTALLED PER MANUFACTURERS' SPECIFICATIONS. FILLER SHALL BE NON-TOXIC, NON-FLAMABLE MATERIAL AND SHALL PROVIDE AN AIR TIGHT SEAL.

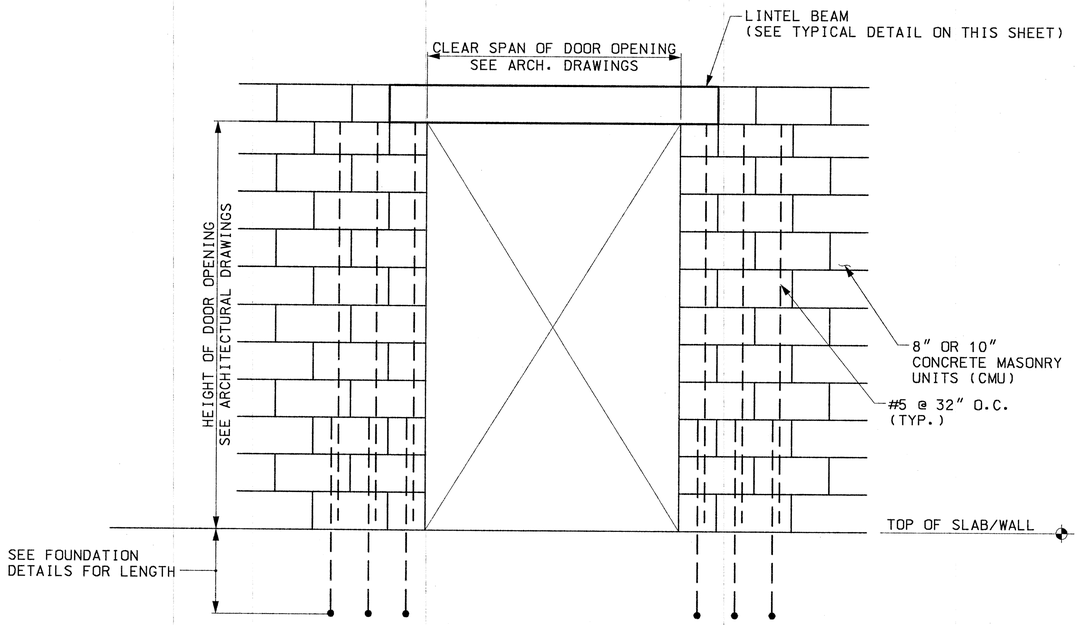

MASONRY OPENING AT DOOR

NOT TO SCALE

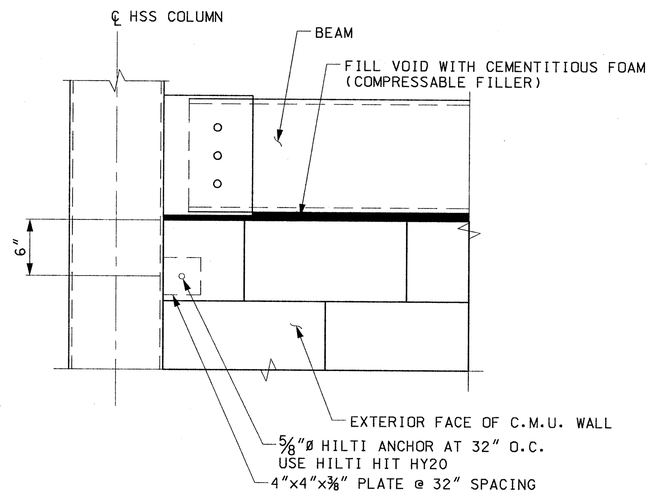

TYPICAL C.M.U. DETAIL AT UNDERSIDE OF BEAM

NOT TO SCALE

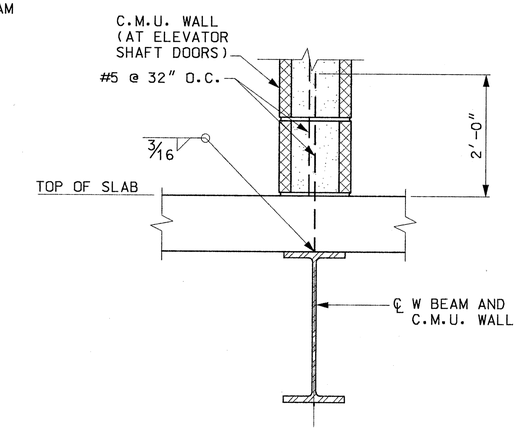

TYPICAL C.M.U. AT W BEAM DETAIL

NOT TO SCALE

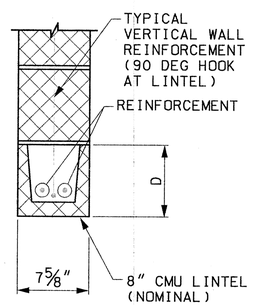

WALL TYPE	CLEAR SPAN	D	REINFORCEMENT
INTERIOR	LESS THAN 6'-4"	8"	2-#5
EXTERIOR	LESS THAN 10'-0"	16"	2-#5

NOTES:

1. PROVIDE 8" (MIN) BEARING AT EACH SIDE OF CLEAR SPAN.
2. FULLY GROUT CMU OVER DEPTH "D" TO ENDS OF BEARING.
3. "D" OF 16" MAY CONSIST OF ONE FULLY GROUTED 16" CMU LINTEL BLOCK OR ONE FULLY GROUTED 8" CMU LINTEL BLOCK PLUS ONE FULLY GROUTED 8" CMU.

TYPICAL CMU LINTEL

NOT TO SCALE

COMMONWEALTH OF MASSACHUSETTS
GREGORY T. STEFANO
STRUCTURAL No. 36726
REGISTERED PROFESSIONAL ENGINEER
5/18/2012

MASSACHUSETTS BAY TRANSPORTATION AUTHORITY

FITCHBURG COMMUTER RAIL LINE
IMPROVEMENT PROJECT
CONTRACT NO. G67CN01

SOUTH ACTON STATION
HEAD HOUSES MASONRY WALL
DETAILS

ISSUE	DATE	DESCRIPTION	BY	CHKD.	APP.

HNTB 300 APOLLO DRIVE CHELMSFORD, MA 01824 (978) 905-4000

PROJECT MANAGER 5/20/12 Date

MASSACHUSETTS BAY TRANSPORTATION AUTHORITY

APPROVED BY: PROJECT MANAGER 6/30/12 Date

JACOBS 343 CONGRESS STREET BOSTON, MA 02110 (617) 242-8222

	DES. BY	DR. BY	CHK. BY
HORIZ: N/A	DJM	DJM	MWT
VERT: N/A			
DATE: 5/17/12			

PLAN NO. 168672

SHEET S-132

ISSUE

FILE NAME: P:\MBTA\2008\E2X37800\CAD\700CADD\702STATIONS\South Acton\Structural\PS&E Submission\132_Head_Houses_Masonry_Wall_Dets.dwg
PLOT DATE: May 18, 2012 - 8:24am

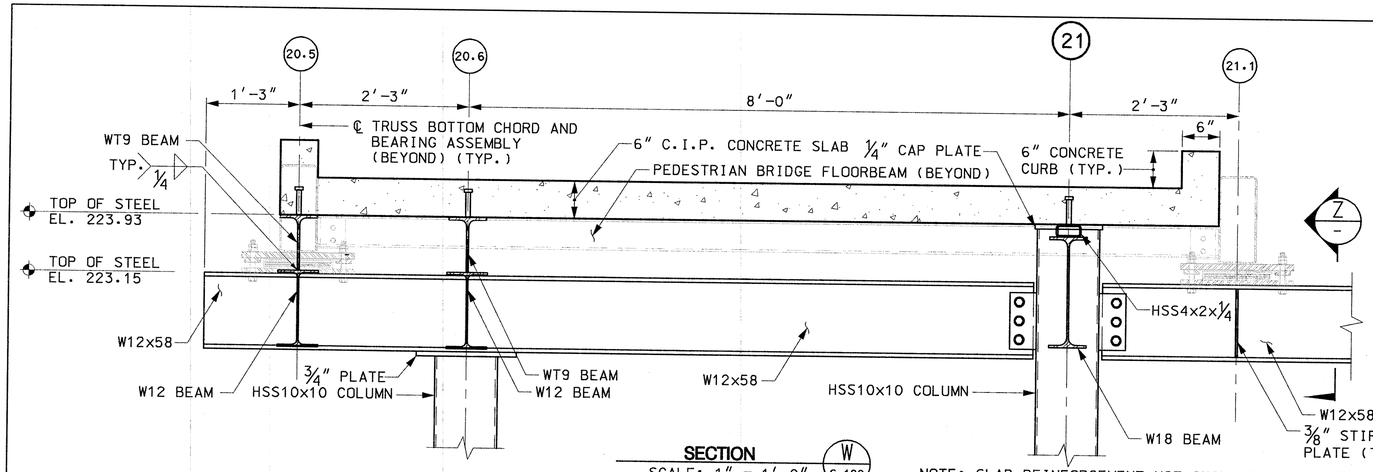

SECTION W / S-120
SCALE: 1" = 1'-0"

NOTE: SLAB REINFORCEMENT NOT SHOWN FOR CLARITY.

NOTES:

1. FOR GENERAL NOTES, SEE SHEET S-100.
2. THE CONTRACTOR SHALL COORDINATE STRUCTURAL AND ARCHITECTURAL DRAWINGS. ANY DISCREPANCIES SHALL BE BROUGHT TO THE ATTENTION OF THE ENGINEER PRIOR TO STEEL FABRICATION.
3. ALL STEEL ELEMENTS SHALL BE HOT-DIP GALVANIZED UNLESS OTHERWISE NOTED.

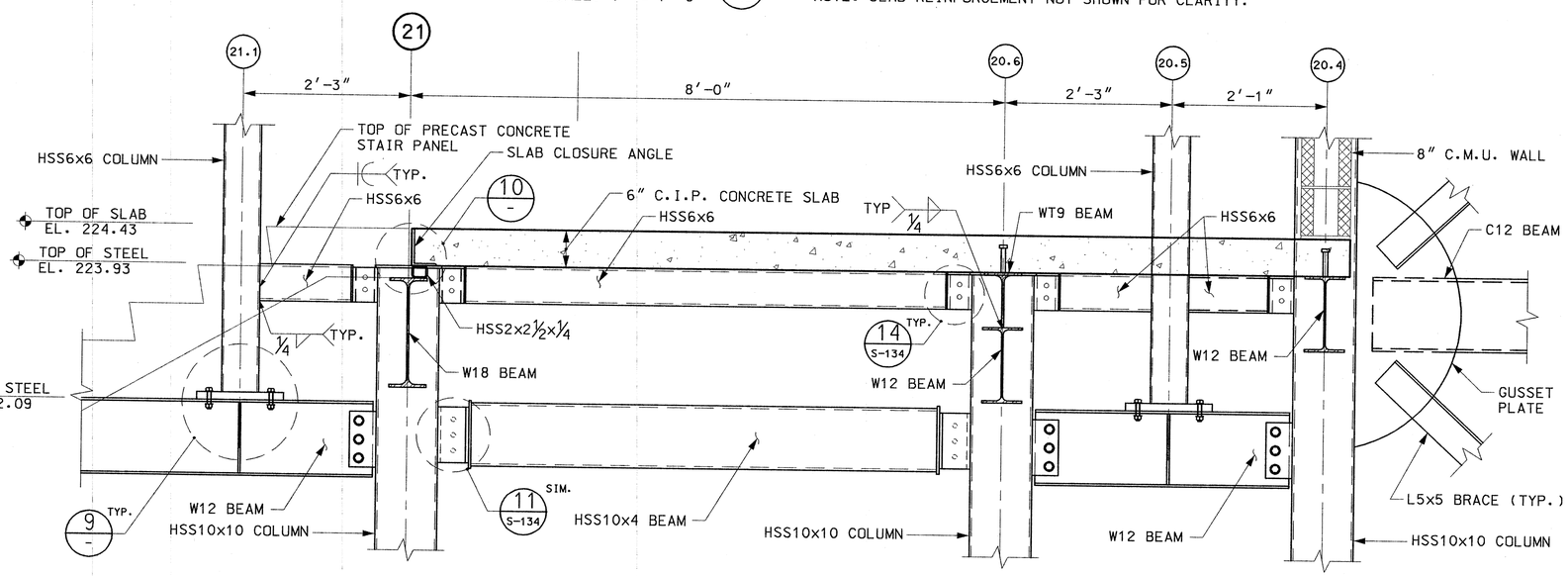

SECTION X / S-120
SCALE: 1" = 1'-0"

NOTE: SLAB AND STAIR REINFORCEMENT NOT SHOWN FOR CLARITY.

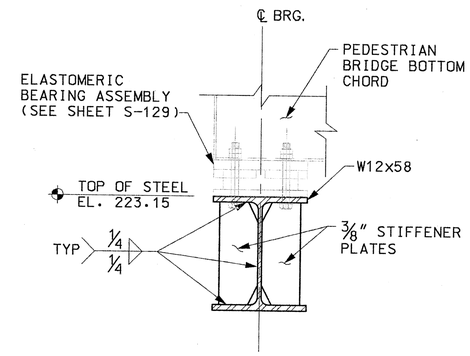

SECTION Z / -
SCALE: 1 1/2" = 1'-0"

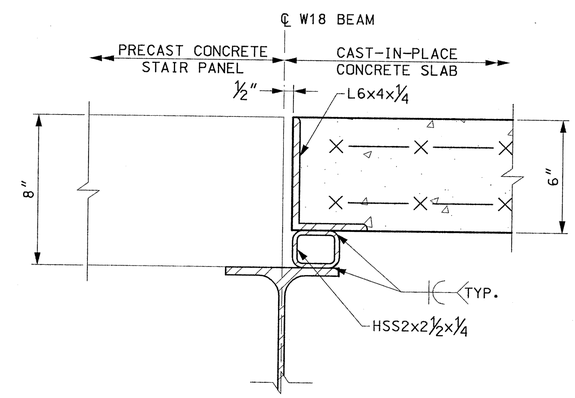

DETAIL 10 / - 10 / S-131
SCALE: 3" = 1'-0"

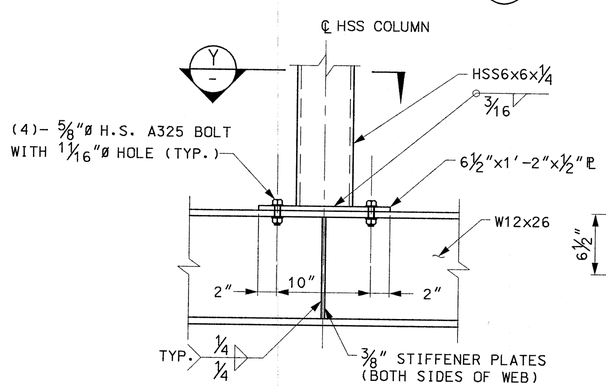

DETAIL 9 / -
SCALE: 1 1/2" = 1'-0"

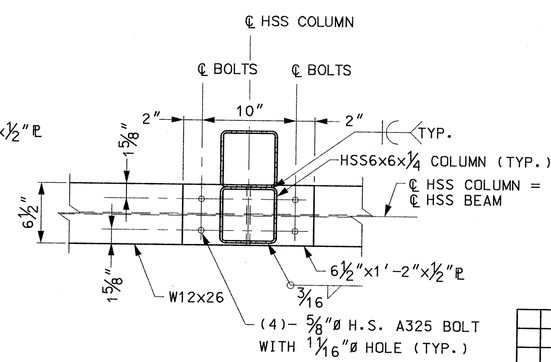

SECTION Y / -
SCALE: 1 1/2" = 1'-0"

FILE NAME: P:\MBTA\2008\E2X37800\CAD\700CADD\702STATIONS\South Acton\Structural\PS&E Submission\ 133-140_Steel_Dets.dwg
PLOT DATE: May 18, 2012 - 8:24am

COMMONWEALTH OF MASSACHUSETTS — GREGORY T. STEFANO — STRUCTURAL No. 36726 — REGISTERED PROFESSIONAL ENGINEER — 5/18/2012

MASSACHUSETTS BAY TRANSPORTATION AUTHORITY

FITCHBURG COMMUTER RAIL LINE IMPROVEMENT PROJECT
CONTRACT NO. G67CN01

SOUTH ACTON STATION
STEEL DETAILS
SHEET 1

ISSUE	DATE	DESCRIPTION	BY	CHKD.	APP.

HNTB — 300 APOLLO DRIVE, CHELMSFORD, MA 01824, (978) 905-4000 — PROJECT MANAGER — Date 5/23/12

MASSACHUSETTS BAY TRANSPORTATION AUTHORITY — APPROVED BY: PROJECT MANAGER — Date 6/30/12

JACOBS — 343 CONGRESS STREET, BOSTON, MA 02110, (617) 242-9222

HORIZ: N/A	DES. BY	DR. BY	CHK. BY	PLAN NO. 168673	ISSUE
VERT: N/A	DJM	DJM	MWT		
DATE: 5/17/12				SHEET S-133	

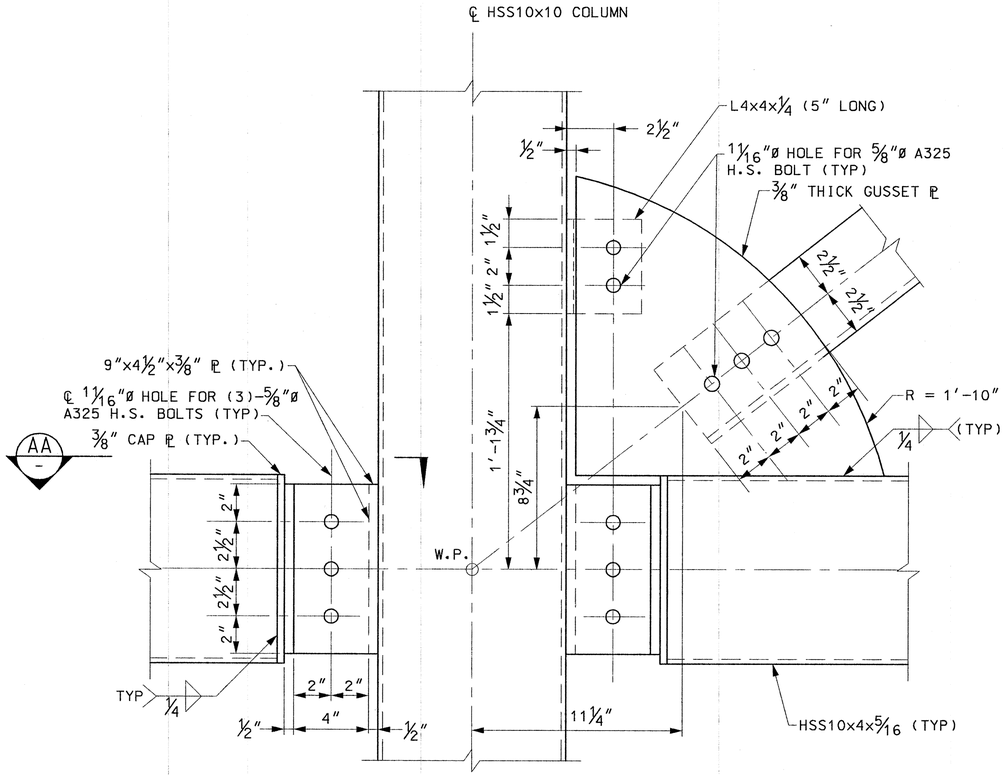

DETAIL 11 (S-123) 11 (S-124) 11 (S-126) 11 (S-127) 11 (S-133)
SCALE: 3" = 1'-0"

SCHEDULE "A" STANDARD BOLTED CONNECTION			
BEAM SIZE	NO. AND SIZE OF BOLTS REQUIRED	PLATE THICKNESS	WELD SIZE (W)
W10	(2) 3/4" DIA.	3/8	1/4
W12	(3) 3/4" DIA.	3/8	1/4
W18	(4) 3/4" DIA.	1/2	5/16

NOTES:

1. FOR GENERAL NOTES, SEE SHEET S-100.
2. THE CONTRACTOR SHALL COORDINATE STRUCTURAL AND ARCHITECTURAL DRAWINGS. ANY DISCREPANCIES SHALL BE BROUGHT TO THE ATTENTION OF THE ENGINEER PRIOR TO STEEL FABRICATION.
3. ALL STEEL ELEMENTS SHALL BE HOT-DIP GALVANIZED UNLESS OTHERWISE NOTED.

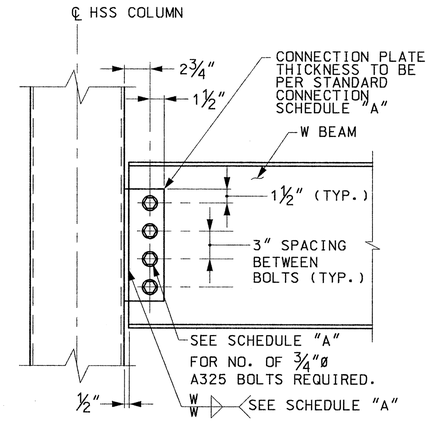

TYPICAL W BEAM TO COLUMN CONNECTION DETAIL
SCALE: N.T.S.

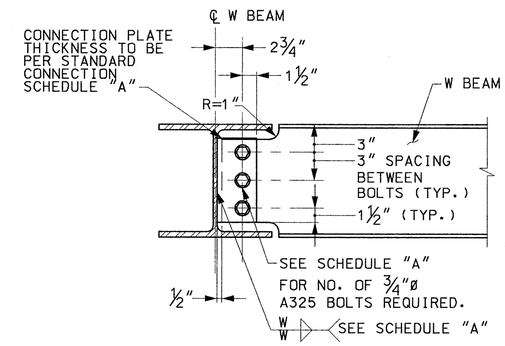

TYPICAL W BEAM TO W BEAM CONNECTION DETAIL
SCALE: N.T.S.

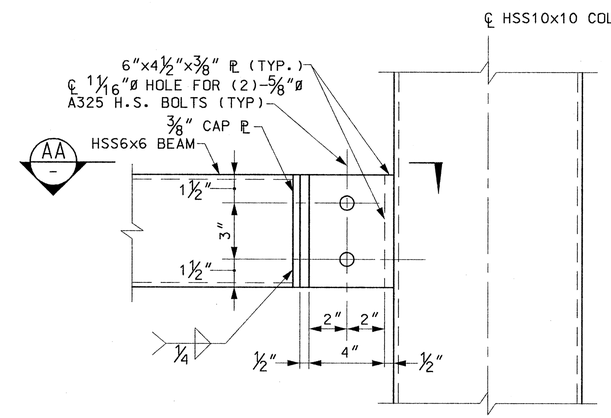

DETAIL 14 (S-133)
SCALE: 3" = 1'-0"

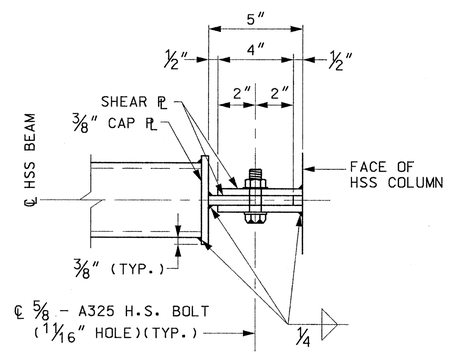

SECTION AA
SCALE: 3" = 1'-0"

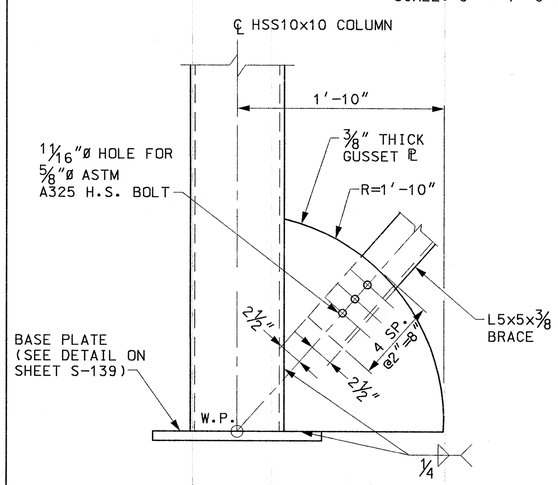

DETAIL 12 (S-123) 12 (S-124) 12 (S-125) 12 (S-126) 12 (S-127)
SCALE: 1 1/2" = 1'-0"

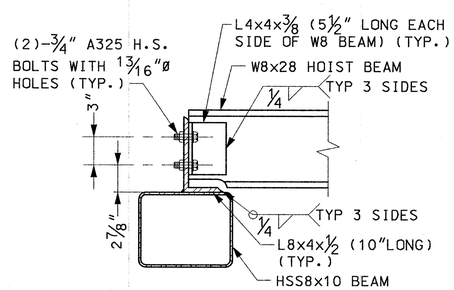

SECTION CA
SCALE: 1 1/2" = 1'-0"

COMMONWEALTH OF MASSACHUSETTS
GREGORY T. STEFANO
STRUCTURAL No. 36726
REGISTERED PROFESSIONAL ENGINEER
5/18/2012

MASSACHUSETTS BAY TRANSPORTATION AUTHORITY
FITCHBURG COMMUTER RAIL LINE IMPROVEMENT PROJECT
CONTRACT NO. G67CN01

SOUTH ACTON STATION STEEL DETAILS SHEET 2

ISSUE	DATE	DESCRIPTION	BY	CHKD.	APP.

JACOBS — 343 CONGRESS STREET BOSTON, MA 02110 (617) 242-9222

HNTB — 300 APOLLO DRIVE CHELMSFORD, MA 01824 (978) 905-4000
PROJECT MANAGER — Date 5/30/12

MASSACHUSETTS BAY TRANSPORTATION AUTHORITY
APPROVED BY: PROJECT MANAGER — Date 6/30/12

HORIZ: N/A	DES. BY	DR. BY	CHK. BY	PLAN NO. 168674	ISSUE
VERT: N/A	DJM	DJM	MWT		
DATE: 5/17/12				SHEET S-134	

FILE NAME: P:\MBTA\2008\E2X37800\CAD\700CADD\702STATIONS\South Acton\Structural\PS&E Submission\133-140_Steel_Dets.dwg
PLOT DATE: May 18, 2012 - 8:24am

NOTES:

1. FOR GENERAL NOTES, SEE SHEET S-100.
2. THE CONTRACTOR SHALL COORDINATE STRUCTURAL AND ARCHITECTURAL DRAWINGS. ANY DISCREPANCIES SHALL BE BROUGHT TO THE ATTENTION OF THE ENGINEER PRIOR TO STEEL FABRICATION.
3. ALL STEEL ELEMENTS SHALL BE HOT-DIP GALVANIZED UNLESS OTHERWISE NOTED.

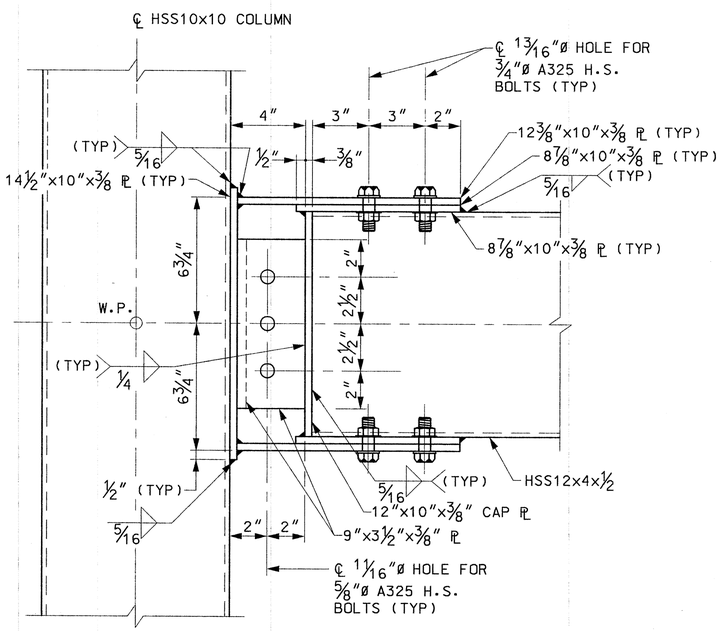

ELEVATION

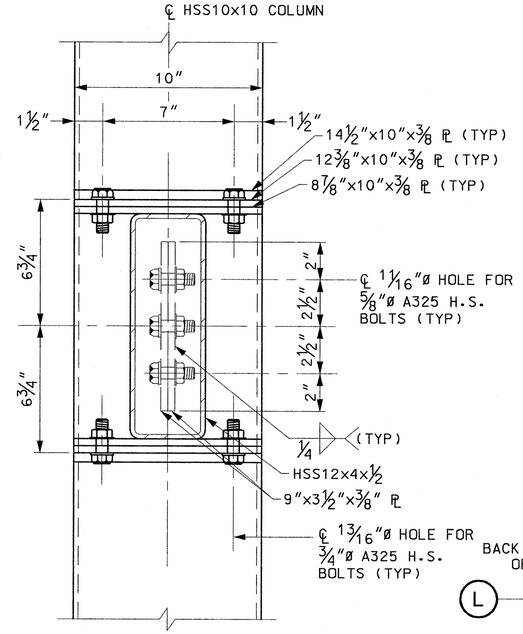

SECTION

TYPICAL MOMENT CONNECTION DETAIL
SCALE: 3" = 1'-0"

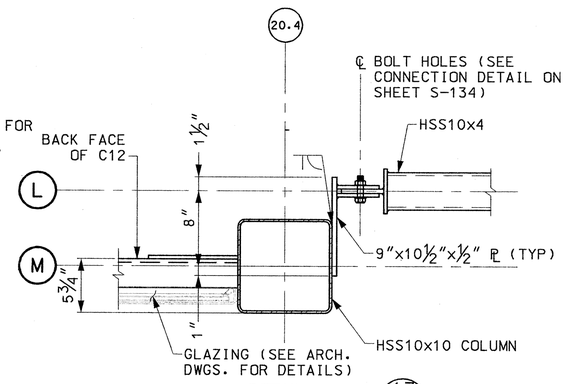

DETAIL 17 S-119
SCALE: 1 1/2" = 1'-0"

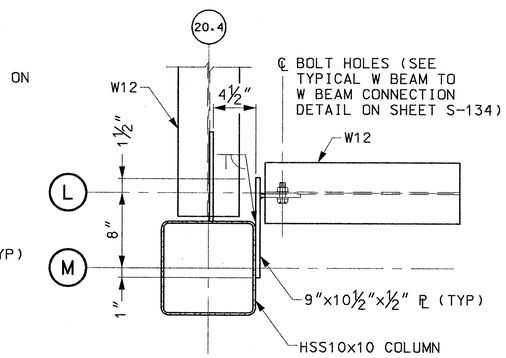

DETAIL 18 S-120
SCALE: 1 1/2" = 1'-0"

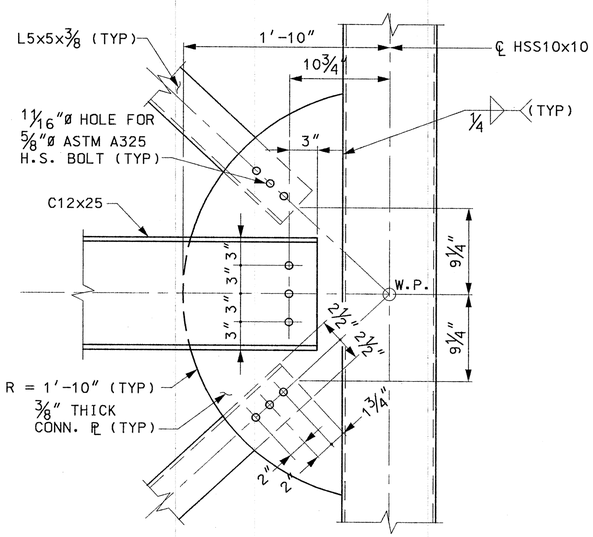

DETAIL 15 S-124 15 S-125 15 S-127
SCALE: 1 1/2" = 1'-0"

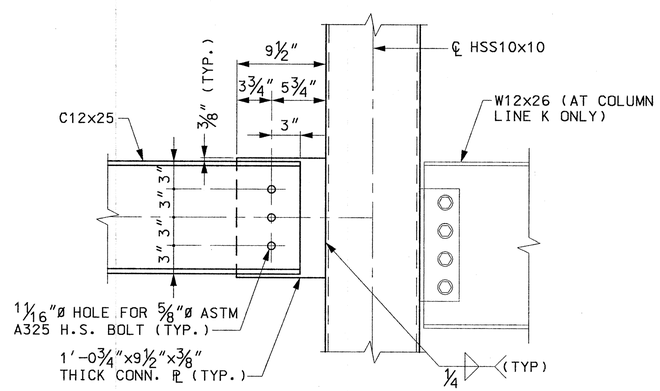

DETAIL 16 S-123 16 S-124 16 S-125 16 S-126 16 S-127
SCALE: 1 1/2" = 1'-0"

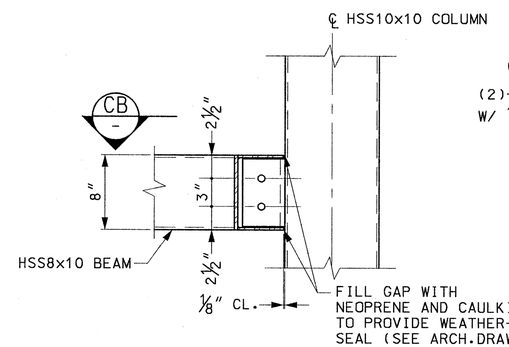

DETAIL 13 S-124 13 S-125 13 S-126 13 S-127
SCALE: 1 1/2" = 1'-0"

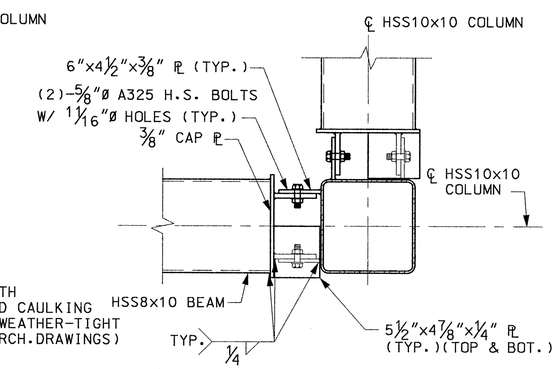

SECTION CB -
SCALE: 1 1/2" = 1'-0"

COMMONWEALTH OF MASSACHUSETTS
GREGORY T. STEFANO
STRUCTURAL
No. 39726
REGISTERED PROFESSIONAL ENGINEER
5/18/2012

MASSACHUSETTS BAY TRANSPORTATION AUTHORITY

FITCHBURG COMMUTER RAIL LINE
IMPROVEMENT PROJECT
CONTRACT NO. G67CN01

SOUTH ACTON STATION
STEEL DETAILS
SHEET 3

ISSUE	DATE	DESCRIPTION	BY	CHKD.	APP.

HNTB
300 APOLLO DRIVE
CHELMSFORD, MA 01824
(978) 905-4000
PROJECT MANAGER 5/20/12 Date

MASSACHUSETTS BAY TRANSPORTATION AUTHORITY
APPROVED BY:
PROJECT MANAGER 6/30/12 Date

JACOBS
343 CONGRESS STREET
BOSTON, MA 02110
(617) 242-9222

HORIZ: N/A	DES. BY	DR. BY	CHK. BY	PLAN NO. 168675	ISSUE
VERT: N/A	DJM	DJM	MWT		
DATE: 5/17/12				SHEET S-135	

FILE NAME: P:\MBTA\2008\E2X37800\CAD\700CADD\702STATIONS\South Acton\Structural\PS&E Submission\ 1.33-140_Steel_Dets.dwg
PLOT DATE: May 18, 2012 - 8:24am

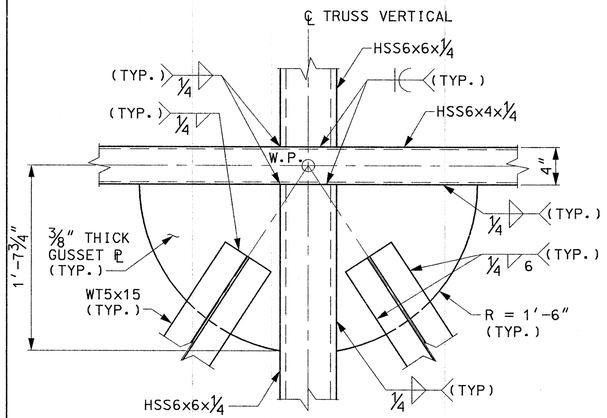

DETAIL 19 S-128
SCALE: 1 1/2" = 1'-0"

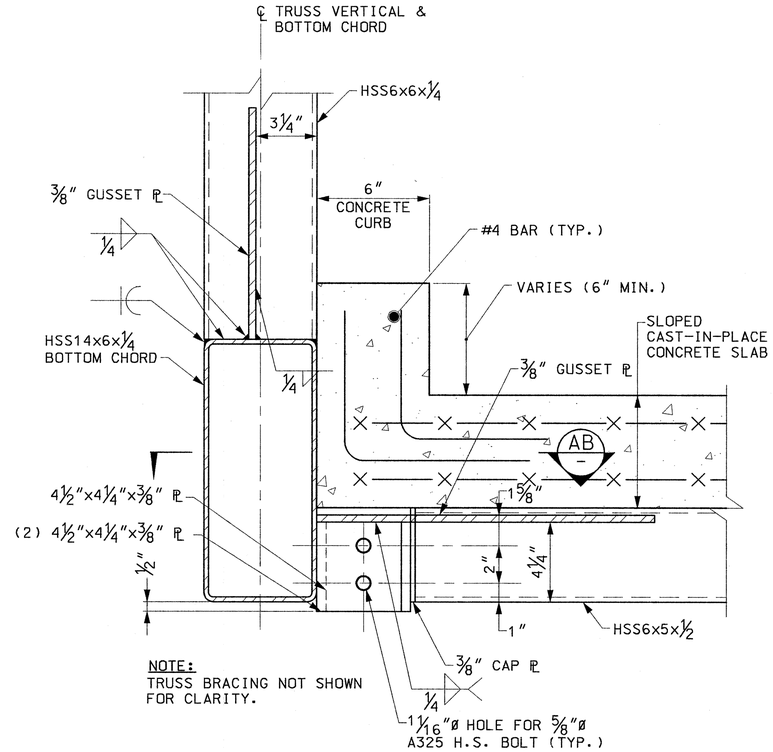

NOTE:
TRUSS BRACING NOT SHOWN
FOR CLARITY.

DETAIL 21 S-128
SCALE: 3" = 1'-0"

NOTES:

1. FOR GENERAL NOTES, SEE SHEET S-100.
2. THE CONTRACTOR SHALL COORDINATE STRUCTURAL AND ARCHITECTURAL DRAWINGS. ANY DISCREPANCIES SHALL BE BROUGHT TO THE ATTENTION OF THE ENGINEER PRIOR TO STEEL FABRICATION.
3. ALL STEEL ELEMENTS SHALL BE HOT-DIP GALVANIZED UNLESS OTHERWISE NOTED.

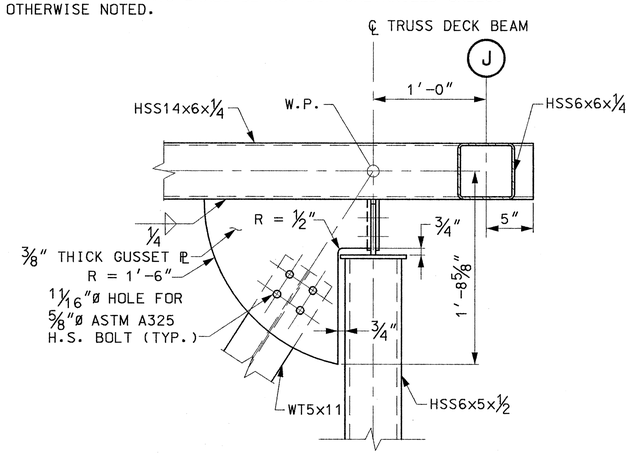

DETAIL 23 S-128
SCALE: 1 1/2" = 1'-0"

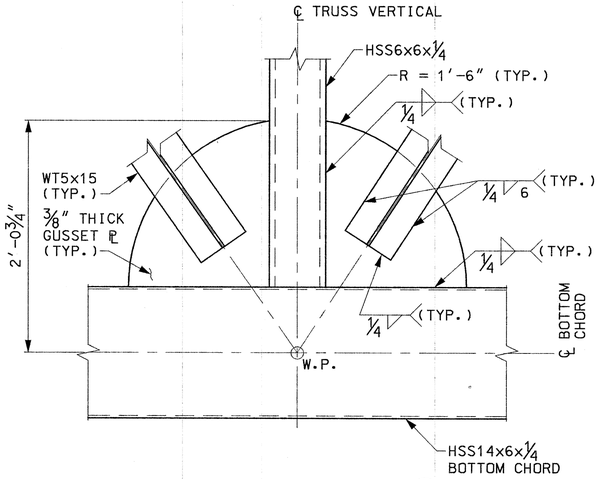

DETAIL 20 S-128
SCALE: 1 1/2" = 1'-0"

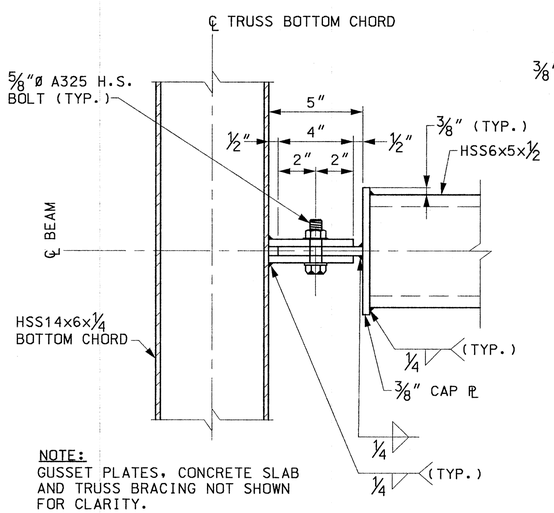

NOTE:
GUSSET PLATES, CONCRETE SLAB
AND TRUSS BRACING NOT SHOWN
FOR CLARITY.

SECTION AB -
SCALE: 3" = 1'-0"

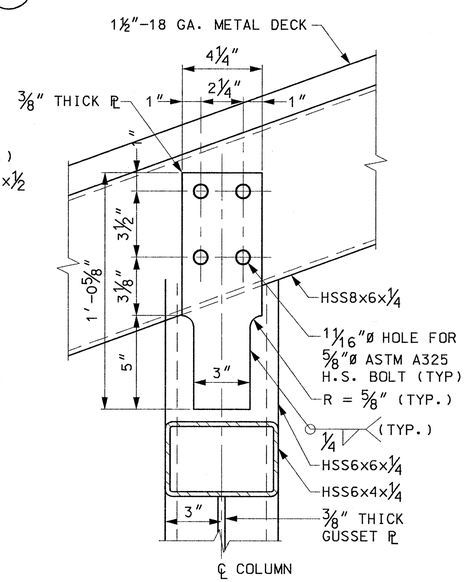

DETAIL 22 S-128
SCALE: 3" = 1'-0"

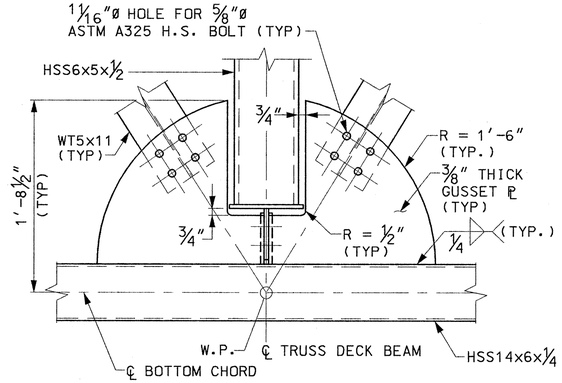

DETAIL 24 S-128
SCALE: 1 1/2" = 1'-0"

COMMONWEALTH OF MASSACHUSETTS
GREGORY T. STEFANO
STRUCTURAL
No. 36726
REGISTERED PROFESSIONAL ENGINEER
5/18/2012

MASSACHUSETTS BAY TRANSPORTATION AUTHORITY

FITCHBURG COMMUTER RAIL LINE
IMPROVEMENT PROJECT
CONTRACT NO. G67CN01

SOUTH ACTON STATION
STEEL DETAILS
SHEET 4

ISSUE	DATE	DESCRIPTION	BY	CHKD.	APP.

JACOBS 343 CONGRESS STREET BOSTON, MA 02110 (617) 242-9222

HNTB 300 APOLLO DRIVE CHELMSFORD, MA 01824 (978) 905-4000

PROJECT MANAGER 5/18/12 Date

MASSACHUSETTS BAY TRANSPORTATION AUTHORITY
APPROVED BY: 6/30/12
PROJECT MANAGER Date

HORIZ: N/A	DES. BY	DR. BY	CHK. BY	PLAN NO. 168676	ISSUE
VERT: N/A	DJM	DJM	MWT		
DATE: 5/17/12				SHEET S-136	

FILE NAME: P:\MBTA\2008\E2X37800\CAD\700CADD\702STATIONS\South Acton\Structural\PS&E Submission\133-140_Steel_Dets.dwg
PLOT DATE: May 18, 2012 - 8:24am

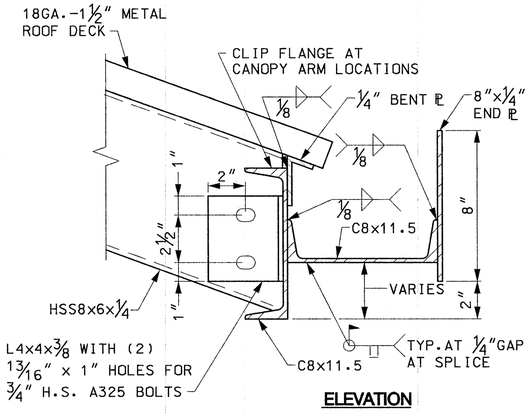

ELEVATION

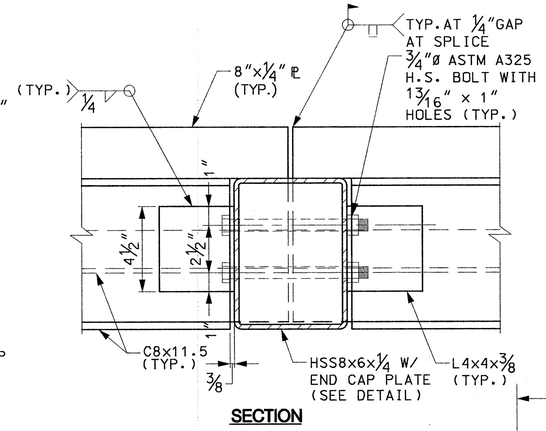

SECTION

GUTTER DETAIL (25 / S-128)
SCALE: 3" = 1'-0"

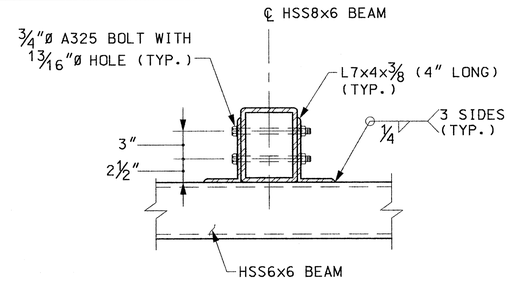

SECTION (AE / S-122)
SCALE: 1 1/2" = 1'-0"

NOTES:

1. FOR GENERAL NOTES, SEE SHEET S-100.
2. THE CONTRACTOR SHALL COORDINATE STRUCTURAL AND ARCHITECTURAL DRAWINGS. ANY DISCREPANCIES SHALL BE BROUGHT TO THE ATTENTION OF THE ENGINEER PRIOR TO STEEL FABRICATION.
3. ALL STEEL ELEMENTS SHALL BE HOT-DIP GALVANIZED UNLESS OTHERWISE NOTED.

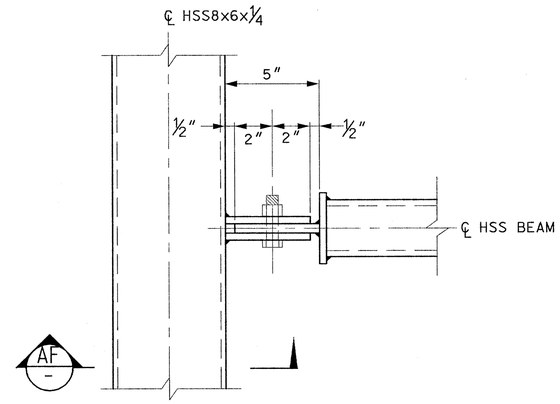

DETAIL (28 / S-128)
SCALE: 3" = 1'-0"

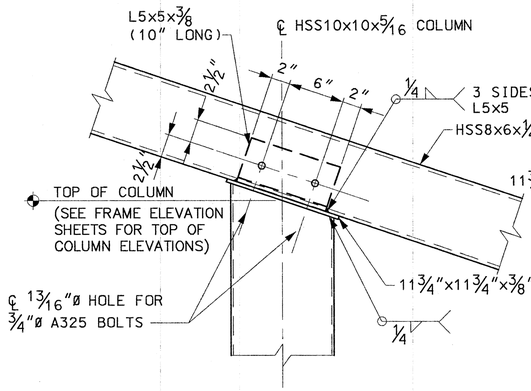

DETAIL (26 / S-123) (26 / S-126)
SCALE: 1 1/2" = 1'-0"

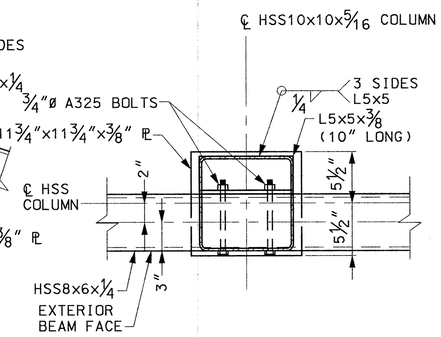

PLAN

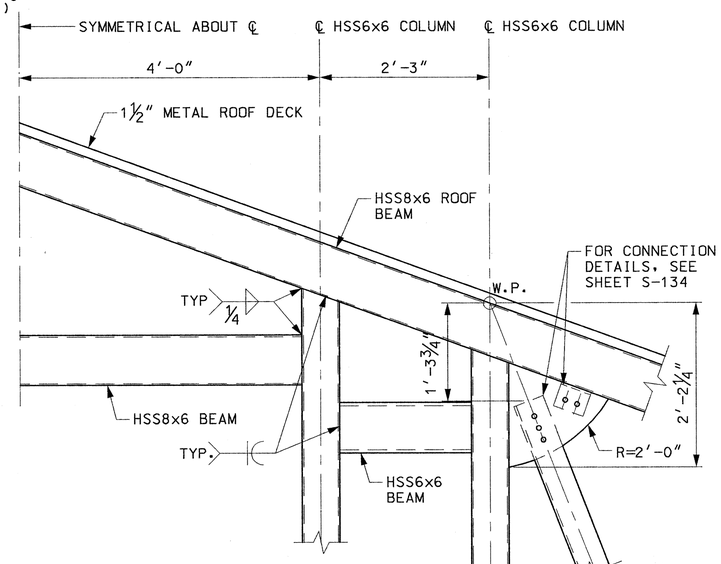

DETAIL (27 / S-123) (27 / S-126)
SCALE: 1" = 1'-0"

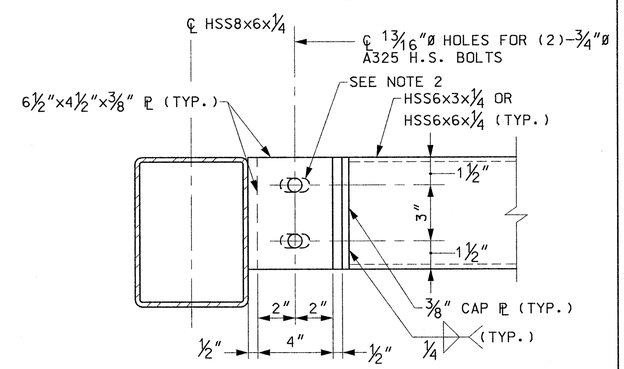

NOTE 1: STEEL ROOF DECK NOT SHOWN FOR CLARITY.
NOTE 2: 13/16"x1 9/16" SLOTTED HOLES IN CONNECTION PLATES (SEE SHEET S-122 FOR LOCATIONS)

SECTION (AF / S-122)
SCALE: 3" = 1'-0"

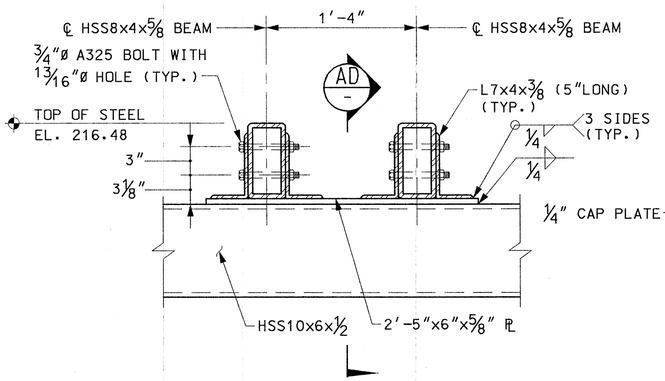

SECTION (AC / S-119)
SCALE: 1 1/2" = 1'-0"

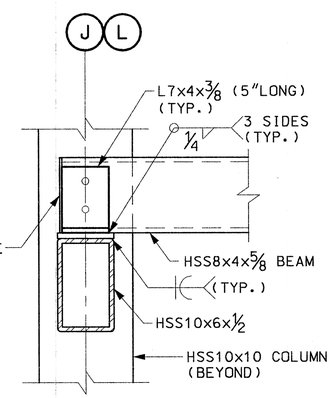

SECTION (AD / -)
SCALE: 1 1/2" = 1'-0"

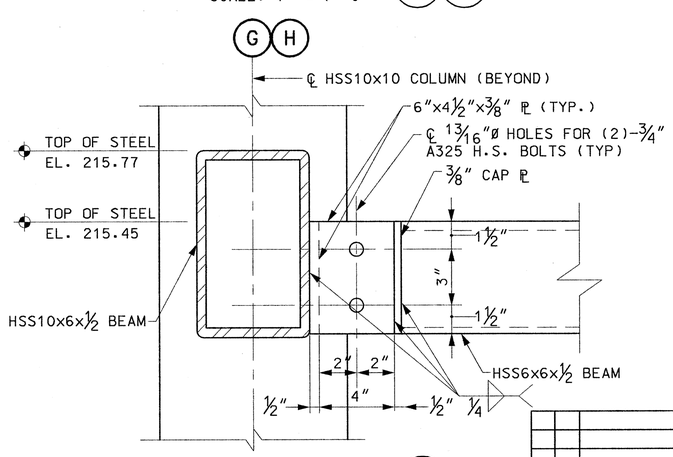

DETAIL (27B / S-119)
SCALE: 3" = 1'-0"

COMMONWEALTH OF MASSACHUSETTS — GREGORY T. STEFANO — STRUCTURAL No. 36726 — REGISTERED PROFESSIONAL ENGINEER — 5/18/2012

MASSACHUSETTS BAY TRANSPORTATION AUTHORITY

FITCHBURG COMMUTER RAIL LINE
IMPROVEMENT PROJECT
CONTRACT NO. G67CN01

SOUTH ACTON STATION STEEL DETAILS SHEET 5

ISSUE	DATE	DESCRIPTION	BY	CHKD.	APP.

JACOBS — 343 CONGRESS STREET, BOSTON, MA 02110, (617) 242-9222

HNTB — 300 APOLLO DRIVE, CHELMSFORD, MA 01824, (978) 905-4000

PROJECT MANAGER — Date 5/30/12

MASSACHUSETTS BAY TRANSPORTATION AUTHORITY — APPROVED BY: PROJECT MANAGER — Date 6/30/12

HORIZ: N/A
VERT: N/A
DATE: 5/17/12

DES. BY	DR. BY	CHK. BY
DJM	DJM	MWT

PLAN NO. 168677
SHEET S-137
ISSUE

FILE NAME: P:\MBTA\2008\E2X37800\CAD\700CADD\702STATIONS\South Acton\Structural\PS&E Submission\ 133-140_Steel_Dets.dwg
PLOT DATE: May 18, 2012 – 8:24am

NOTES:

1. FOR GENERAL NOTES, SEE SHEET S-100.
2. THE CONTRACTOR SHALL COORDINATE STRUCTURAL AND ARCHITECTURAL DRAWINGS. ANY DISCREPANCIES SHALL BE BROUGHT TO THE ATTENTION OF THE ENGINEER PRIOR TO STEEL FABRICATION.
3. ALL STEEL ELEMENTS SHALL BE HOT-DIP GALVANIZED UNLESS OTHERWISE NOTED.
4. FOR HEAD HOUSE CANOPY TYPE 2, SEE SHEET S-139.

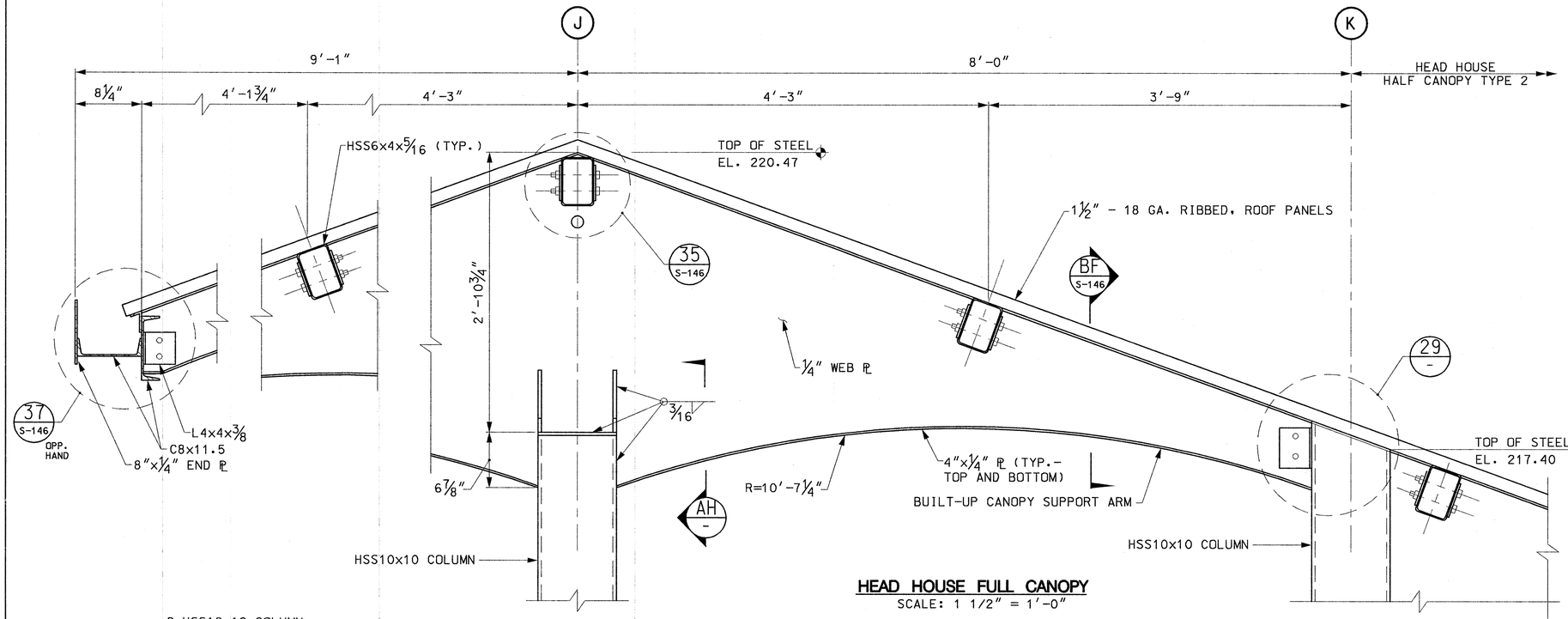

HEAD HOUSE FULL CANOPY

SCALE: 1 1/2" = 1'-0"

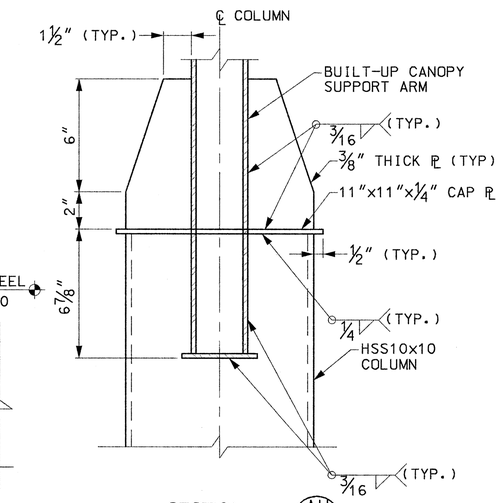

SECTION

SCALE: 3" = 1'-0" (AH / -)

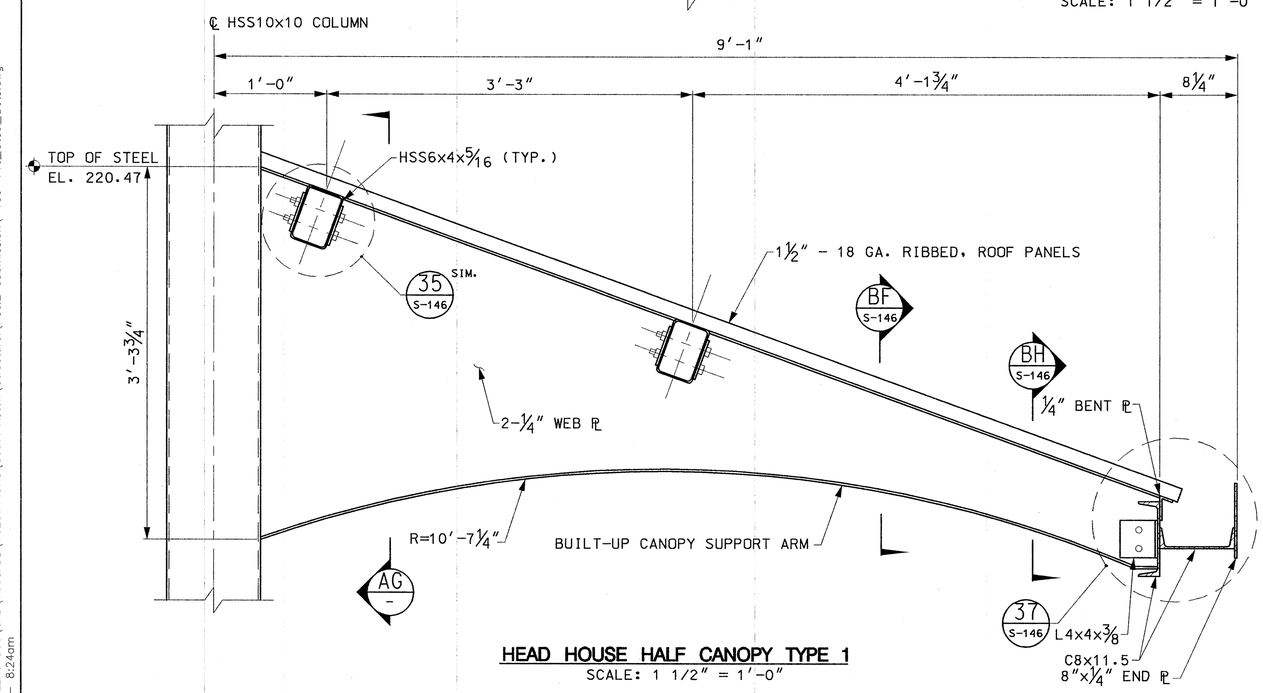

HEAD HOUSE HALF CANOPY TYPE 1

SCALE: 1 1/2" = 1'-0"

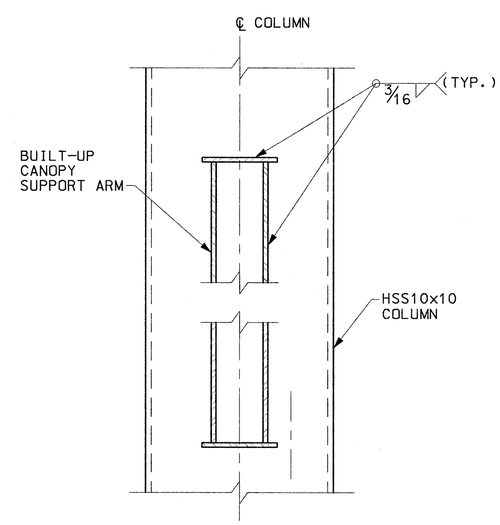

SECTION

SCALE: 3" = 1'-0" (AG / - AG / S-139)

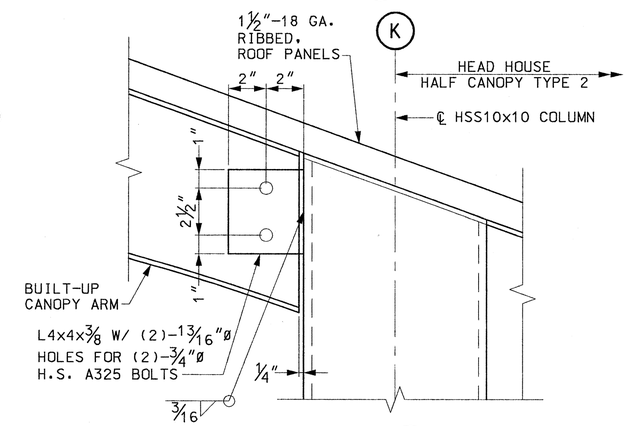

DETAIL

SCALE: 3" = 1'-0" (29 / -)

COMMONWEALTH OF MASSACHUSETTS — GREGORY T. STEFANO — STRUCTURAL No. 36726 — REGISTERED PROFESSIONAL ENGINEER — 05/18/2012

MASSACHUSETTS BAY TRANSPORTATION AUTHORITY

FITCHBURG COMMUTER RAIL LINE
IMPROVEMENT PROJECT
CONTRACT NO. G67CN01

SOUTH ACTON STATION STEEL DETAILS SHEET 6

ISSUE	DATE	DESCRIPTION	BY	CHKD.	APP.

HNTB — 300 APOLLO DRIVE, CHELMSFORD, MA 01824, (978) 905-4000 — PROJECT MANAGER — Date 5/30/12

MASSACHUSETTS BAY TRANSPORTATION AUTHORITY — APPROVED BY: PROJECT MANAGER — Date 6/30/12

JACOBS — 343 CONGRESS STREET, BOSTON, MA 02110, (617) 242-9222

HORIZ: N/A	DES. BY	DR. BY	CHK. BY	PLAN NO. 168678	ISSUE
VERT: N/A	DJM	DJM	MWT		
DATE: 5/17/12				SHEET S-138	

FILE NAME: P:\MBTA\2008\E2X37800\CAD\700CADD\702STATIONS\South Acton\Structural\PS&E Submission\ 133-140_Steel_Dets.dwg
PLOT DATE: May 18, 2012 – 8:24am

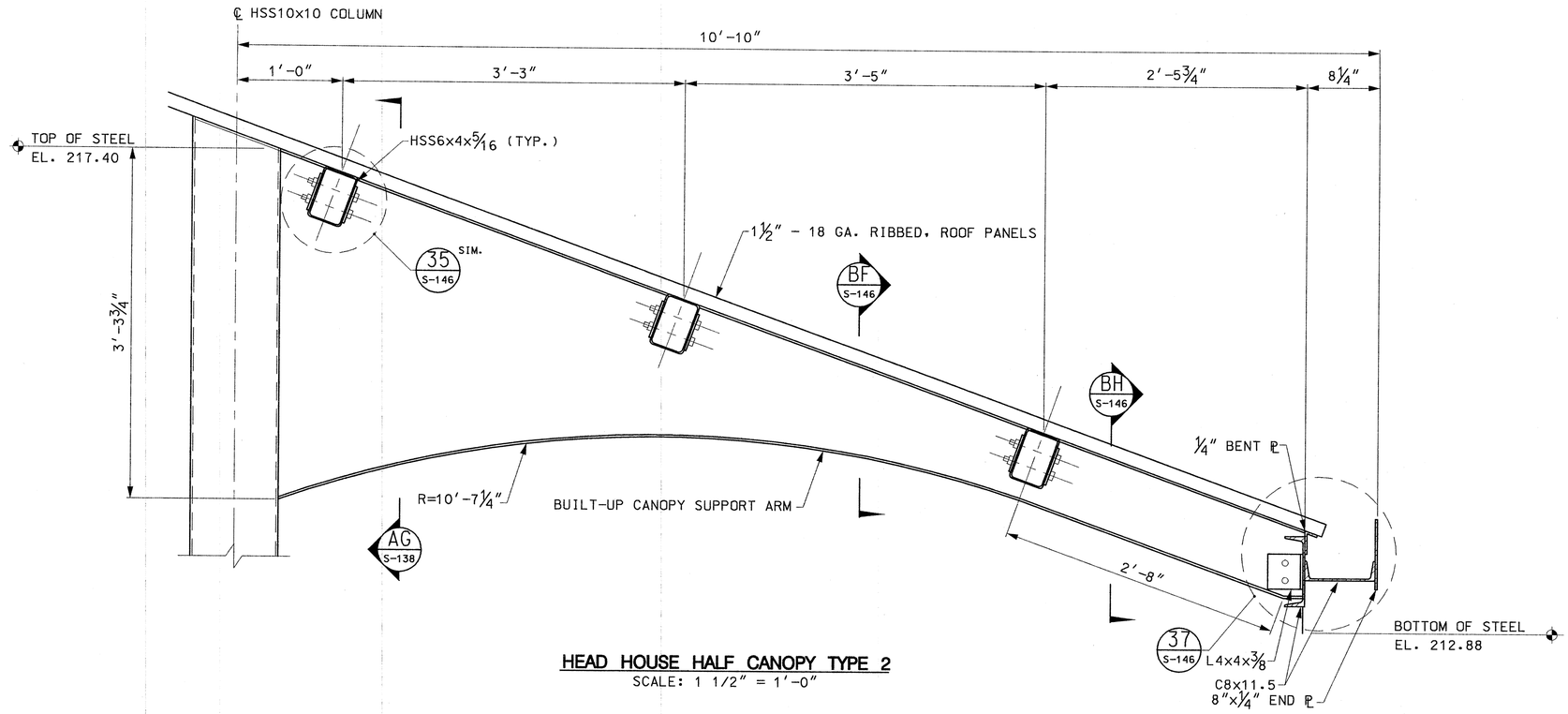

HEAD HOUSE HALF CANOPY TYPE 2

SCALE: 1 1/2" = 1'-0"

NOTES:

1. FOR GENERAL NOTES, SEE SHEETS S-100 AND S-101.
2. THE CONTRACTOR SHALL COORDINATE STRUCTURAL AND ARCHITECTURAL DRAWINGS. ANY DISCREPANCIES SHALL BE BROUGHT TO THE ATTENTION OF THE ENGINEER PRIOR TO STEEL FABRICATION.
3. ALL STEEL ELEMENTS SHALL BE HOT-DIP GALVANIZED UNLESS OTHERWISE NOTED.
4. HSS SIZE VARIES. CLOSURE PLATES REQUIRED AT ALL EXPOSED HSS ENDS.

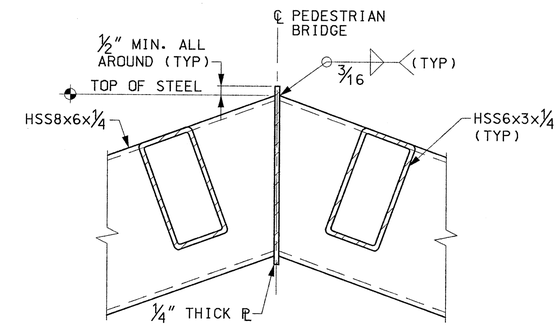

DETAIL

SCALE: 3" = 1'-0"

30 S-128

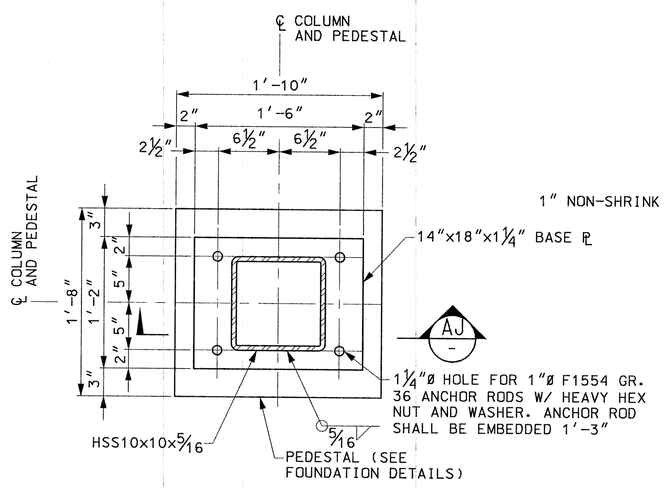

TYPICAL HSS10x10 COLUMN BASE PLATE DETAIL

SCALE: 1 1/2" = 1'-0"

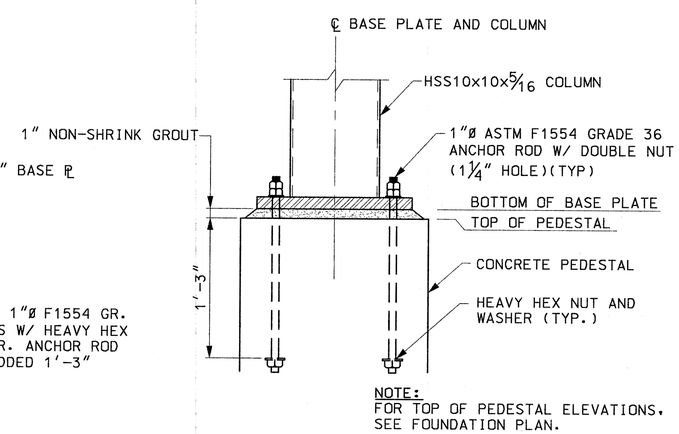

NOTE:
FOR TOP OF PEDESTAL ELEVATIONS, SEE FOUNDATION PLAN.

SECTION

SCALE: 1 1/2" = 1'-0"

AJ -

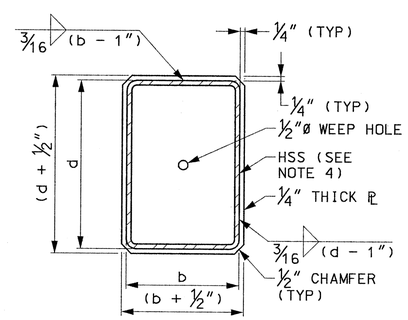

TYPICAL HSS CLOSURE PLATE DETAIL

SCALE: NOT TO SCALE

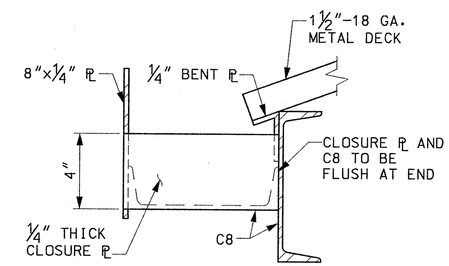

TYPICAL GUTTER CLOSURE PLATE DETAIL

SCALE: NOT TO SCALE

COMMONWEALTH OF MASSACHUSETTS
GREGORY T. STEFANO
STRUCTURAL No. 36726
REGISTERED PROFESSIONAL ENGINEER
5/18/2012

MASSACHUSETTS BAY TRANSPORTATION AUTHORITY

FITCHBURG COMMUTER RAIL LINE
IMPROVEMENT PROJECT
CONTRACT NO. G67CN01

SOUTH ACTON STATION
STEEL DETAILS
SHEET 7

ISSUE	DATE	DESCRIPTION	BY	CHKD.	APP.

HNTB 300 APOLLO DRIVE CHELMSFORD, MA 01824 (978) 905-4000

PROJECT MANAGER 5/30/12 Date

MASSACHUSETTS BAY TRANSPORTATION AUTHORITY
APPROVED BY: 6/30/12
PROJECT MANAGER Date

JACOBS 343 CONGRESS STREET BOSTON, MA 02110 (617) 242-9222

HORIZ: N/A	DES. BY	DR. BY	CHK. BY	PLAN NO. 168679	ISSUE
VERT: N/A	DJM	DJM	MWT		
DATE: 5/17/12				SHEET S-139	

FILE NAME: P:\MBTA\2008\E2X37800\CAD\700CADD\702STATIONS\South Acton\Structural\PS&E Submission\ 133-140_Steel_Dets.dwg
PLOT DATE: May 18, 2012 - 6:24am

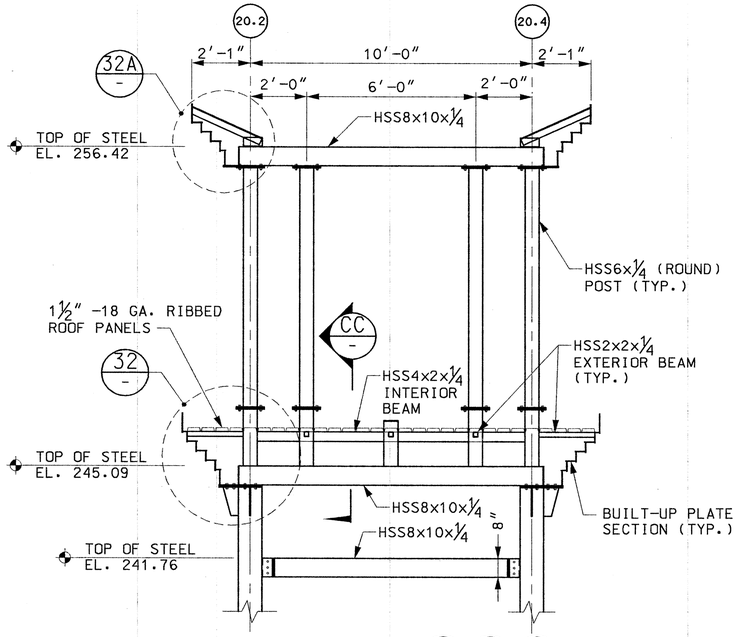

DETAIL (31 S-123) (31 S-124) (31 S-125)
SCALE: 3/8" = 1'-0"

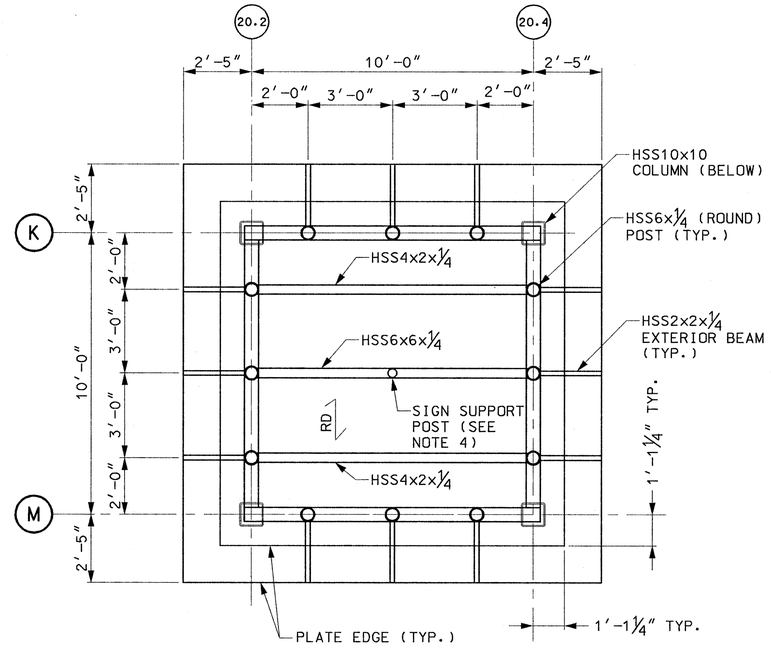

OUTBOUND HEAD HOUSE CAMPANILE DECK FRAMING
SCALE: 3/8" = 1'-0"

NOTES:

1. FOR GENERAL NOTES, SEE SHEET S-100.
2. THE CONTRACTOR SHALL COORDINATE STRUCTURAL AND ARCHITECTURAL DRAWINGS. ANY DISCREPANCIES SHALL BE BROUGHT TO THE ATTENTION OF THE ENGINEER PRIOR TO STEEL FABRICATION.
3. ALL STEEL ELEMENTS SHALL BE HOT-DIP GALVANIZED UNLESS OTHERWISE NOTED.
4. SEE ARCHITECTURAL DRAWINGS FOR ADDITIONAL DETAILS INCLUDING MBTA LOGO SIGN DIMENSIONS AND DETAILS.

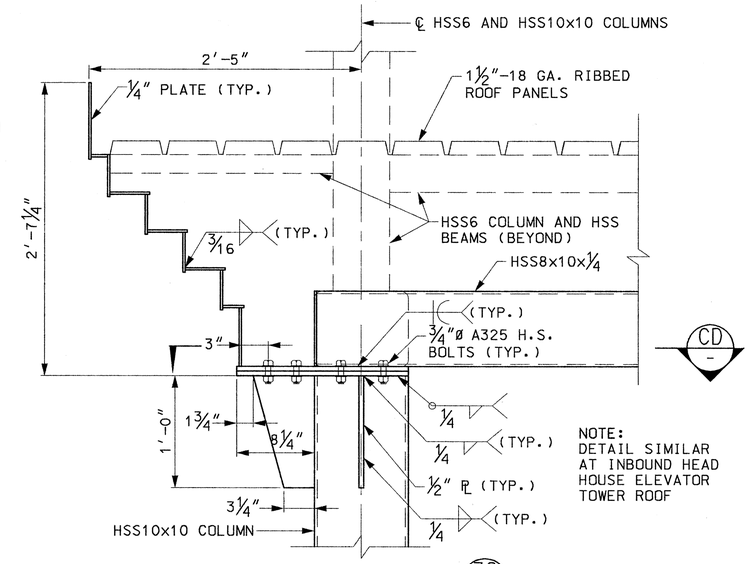

DETAIL (32 -)
SCALE: 1 1/2" = 1'-0"

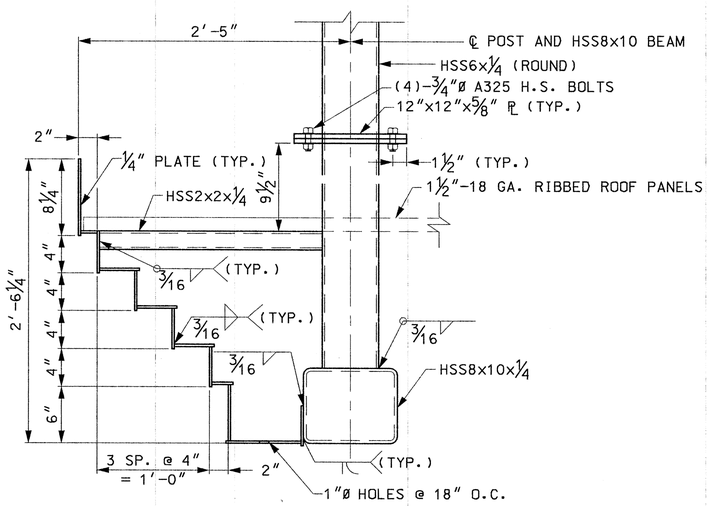

SECTION (CC -)
SCALE: 1 1/2" = 1'-0"

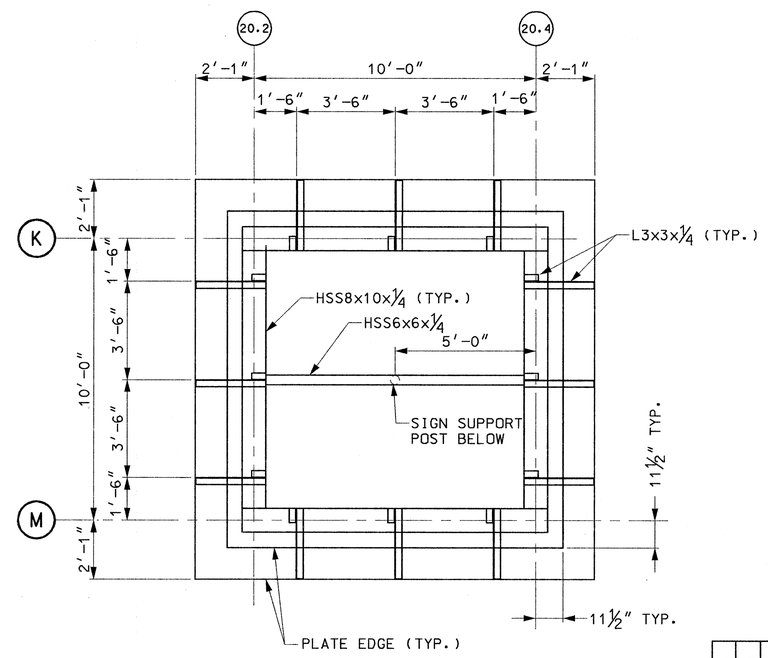

OUTBOUND HEAD HOUSE CAMPANILE ROOF FRAMING
SCALE: 3/8" = 1'-0"

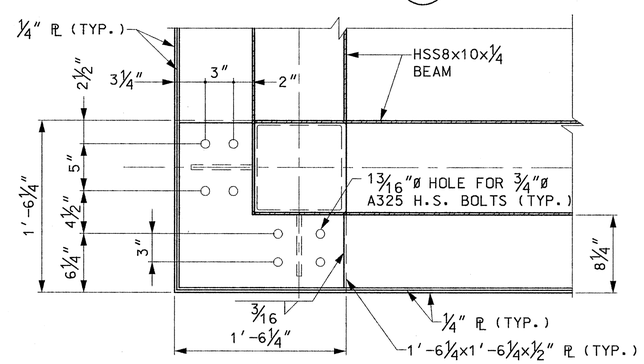

SECTION (CD -)
SCALE: 1 1/2" = 1'-0"

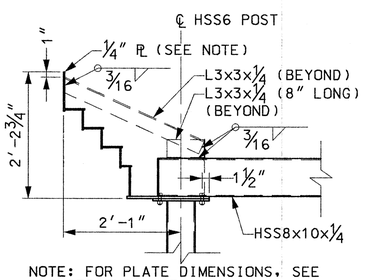

NOTE: FOR PLATE DIMENSIONS, SEE ARCHITECTURAL DETAILS.

DETAIL (32A -)
SCALE: 3/4" = 1'-0"

COMMONWEALTH OF MASSACHUSETTS
GREGORY T. STEFANO
STRUCTURAL
No. 36726
REGISTERED PROFESSIONAL ENGINEER
5/18/2012

MASSACHUSETTS BAY TRANSPORTATION AUTHORITY

FITCHBURG COMMUTER RAIL LINE
IMPROVEMENT PROJECT
CONTRACT NO. G67CN01

SOUTH ACTON STATION
STEEL DETAILS
SHEET 8

ISSUE	DATE	DESCRIPTION	BY	CHKD.	APP.

HNTB
300 APOLLO DRIVE
CHELMSFORD, MA 01824
(978) 905-4000
PROJECT MANAGER 5/18/12 Date

MASSACHUSETTS BAY TRANSPORTATION AUTHORITY
APPROVED BY:
PROJECT MANAGER 6/30/12 Date

JACOBS
343 CONGRESS STREET
BOSTON, MA 02110
(617) 242-9222

HORIZ: N/A	DES. BY	DR. BY	CHK. BY	PLAN NO. 168680	ISSUE
VERT: N/A	DJM	DJM	MWT		
DATE: 5/17/12				SHEET S-140	

FILE NAME: P:\MBTA\2008\E2X37800\CAD\700CADD\702STATIONS\South Acton\Structural\PS&E Submission\ 133-140_Steel_Dets.dwg
PLOT DATE: May 18, 2012 – 8:24am

NOTES:

1. FOR GENERAL NOTES, SEE SHEETS S-100 AND S-101.
2. FOR ADDITIONAL DETAILS, SEE ARCHITECTURAL PLANS.
3. LIMITS OF CANOPY NOT SHOWN FOR CLARITY.
4. SUB-GRADE CONCRETE SHALL BE COATED WITH BITUMINOUS DAMP-PROOFING. ALL OTHER SURFACES SHALL BE COATED WITH A PENETRATING CONCRETE SEALER WITH EXCEPTION TO WALKWAY SURFACES.
5. ELEVATIONS ARE FOR REFERENCE ONLY AND SHOULD BE ADJUSTED BASED ON EXISTING TRACK ELEVATIONS.

LEGEND:

- STRIATED CONCRETE SURFACE

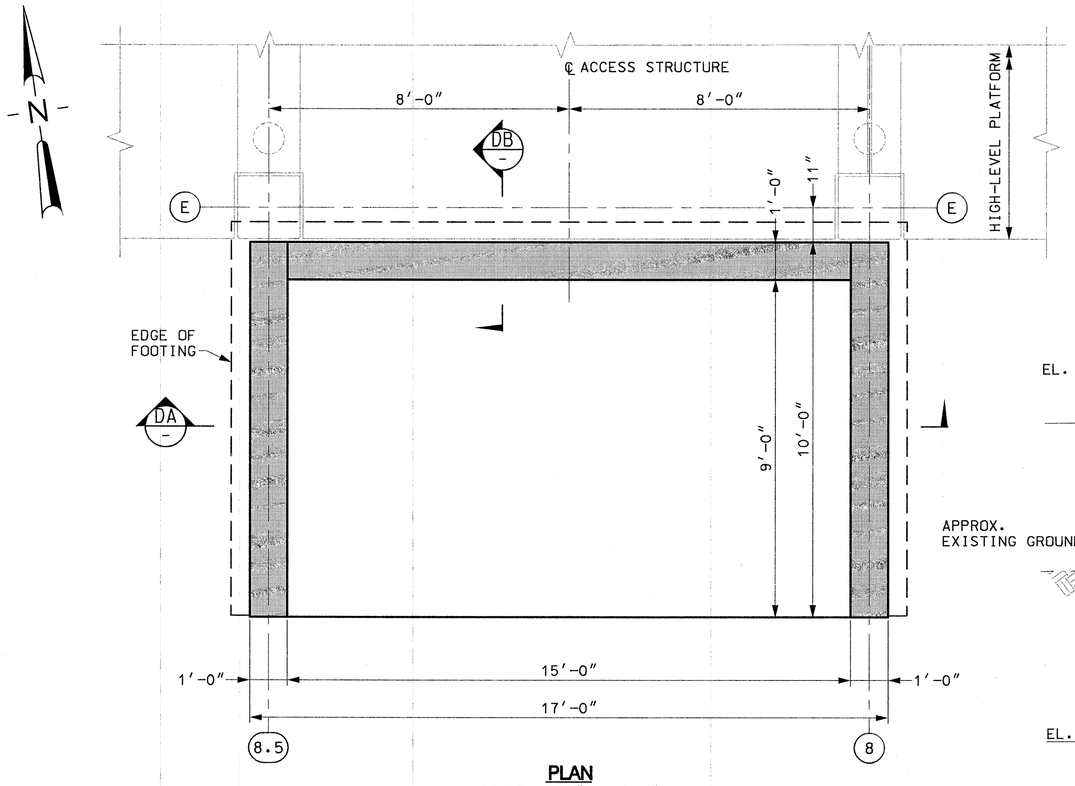

PLAN
SCALE: 1/2" = 1'-0"

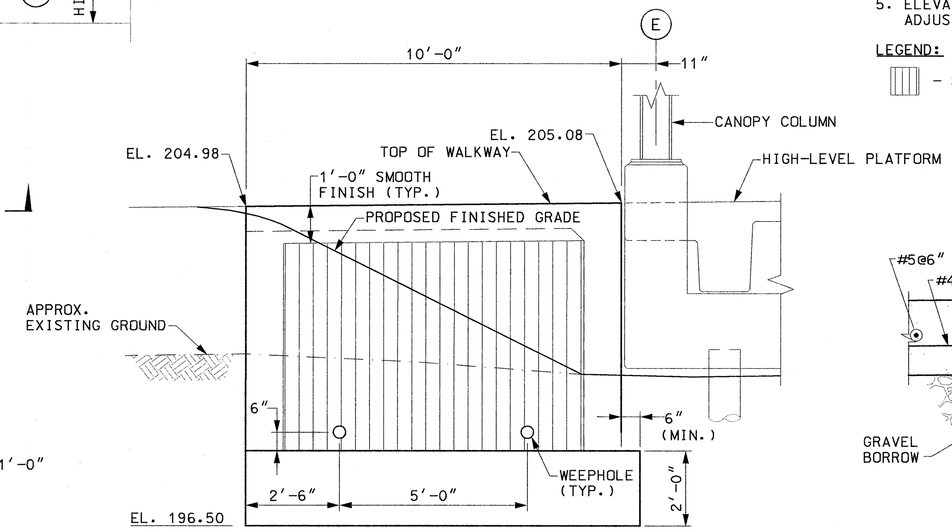

ELEVATION
SCALE: 1/2" = 1'-0"

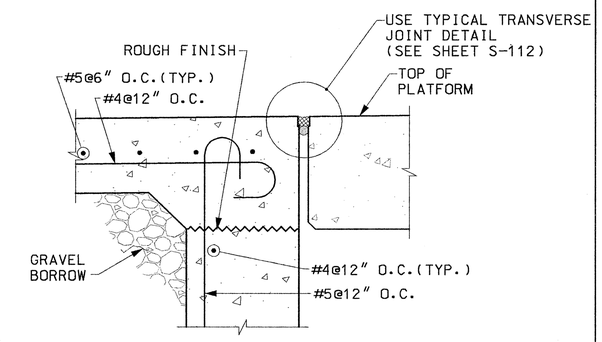

DETAIL 33/-
SCALE: 1 1/2" = 1'-0"

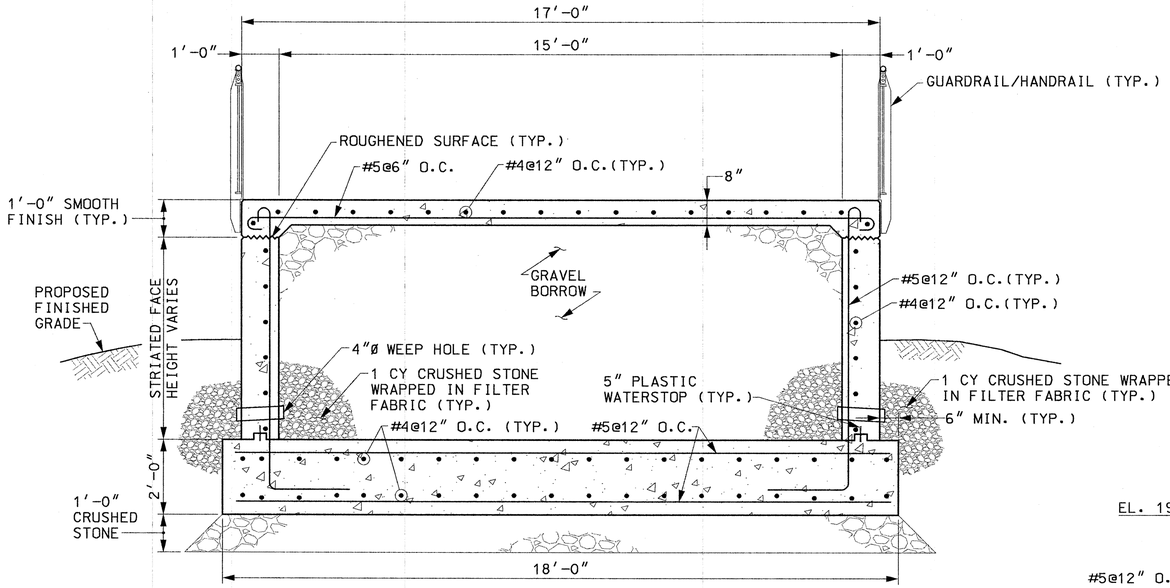

SECTION DA/-
SCALE: 1/2" = 1'-0"

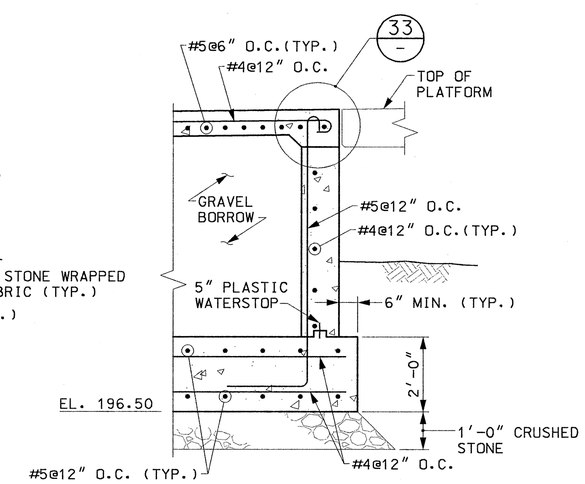

SECTION DB/-
SCALE: 1/2" = 1'-0"

COMMONWEALTH OF MASSACHUSETTS
GREGORY T. STEFANO
STRUCTURAL No. 36726
REGISTERED PROFESSIONAL ENGINEER
5/18/2012

MASSACHUSETTS BAY TRANSPORTATION AUTHORITY

FITCHBURG COMMUTER RAIL LINE
IMPROVEMENT PROJECT
CONTRACT NO. G67CN01

SOUTH ACTON STATION
INBOUND ACCESS STRUCTURE
FROM MAPLE STREET

ISSUE	DATE	DESCRIPTION	BY	CHKD.	APP.

HNTB
300 APOLLO DRIVE
CHELMSFORD, MA 01824
(978) 905-4000
PROJECT MANAGER 5/23/12 Date

MASSACHUSETTS BAY TRANSPORTATION AUTHORITY
APPROVED BY:
PROJECT MANAGER 6/13/12 Date

JACOBS
343 CONGRESS STREET
BOSTON, MA 02110
(617) 242-9222

HORIZ: N/A	DES. BY	DR. BY	CHK. BY	PLAN NO. 168681	ISSUE
VERT: N/A	JAG	JAG	MWT		
DATE: 5/17/12				SHEET S-141	

FILE NAME: P:\MBTA\2008\E2X37800\CAD\700CADD\702STATIONS\South Acton\Structural\PS&E Submission\ 141_In_MapleSt.dwg
PLOT DATE: May 18, 2012 - 8:24am

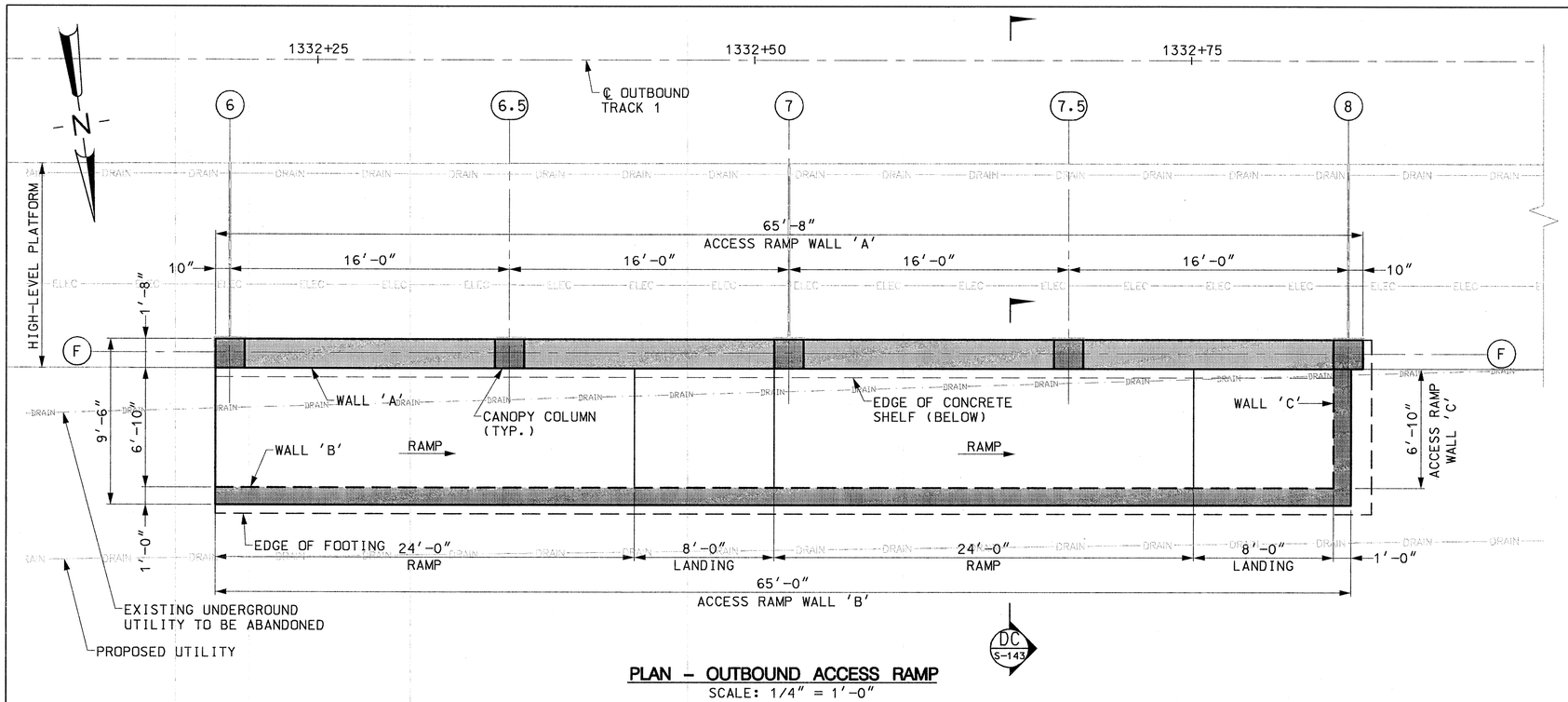

PLAN – OUTBOUND ACCESS RAMP

SCALE: 1/4" = 1'-0"

NOTES:

1. FOR GENERAL NOTES, SEE SHEETS S-100 AND S-101.
2. LIMITS OF CANOPY NOT SHOWN FOR CLARITY.
3. STATION AND OFFSET DATA TAKEN ALONG FRONT FACE OF WALL.
4. WALL DIMENSIONS ARE TAKEN ALONG FRONT FACE OF WALL.
5. SUB-GRADE CONCRETE SHALL BE COATED WITH BITUMINOUS DAMP-PROOFING. ALL OTHER SURFACES SHALL BE COATED WITH A PENETRATING CONCRETE SEALER WITH EXCEPTION TO WALKWAY SURFACES.
6. ELEVATIONS ARE FOR REFERENCE ONLY AND SHOULD BE ADJUSTED BASED ON EXISTING TRACK ELEVATIONS.

LEGEND:

– STRIATED CONCRETE SURFACE

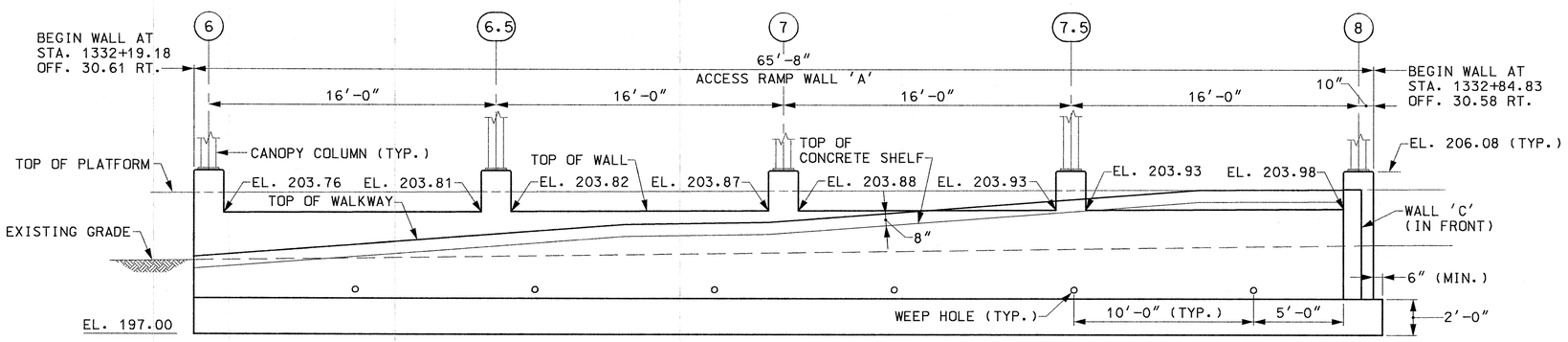

ELEVATION – ACCESS RAMP WALL 'A'

SCALE: 1/4" = 1'-0"

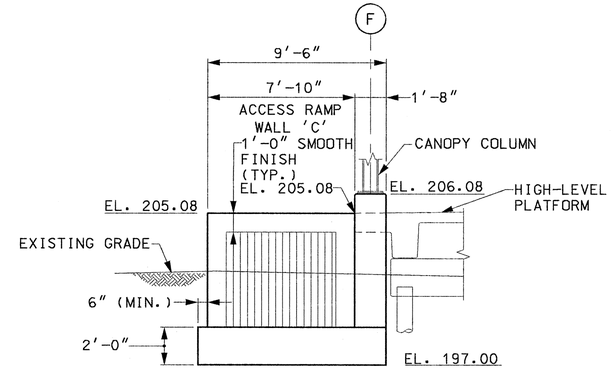

ELEVATION – ACCESS RAMP WALL 'C'

SCALE: 1/4" = 1'-0"

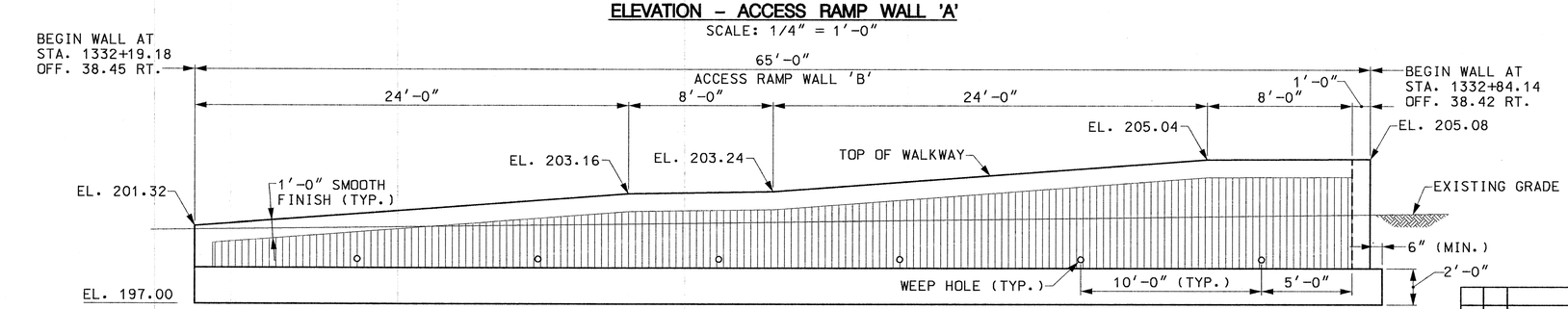

ELEVATION – ACCESS RAMP WALL 'B'

SCALE: 1/4" = 1'-0"

COMMONWEALTH OF MASSACHUSETTS
GREGORY T. STEFANO
STRUCTURAL No. 36726
REGISTERED PROFESSIONAL ENGINEER
5/18/2012

MASSACHUSETTS BAY TRANSPORTATION AUTHORITY

FITCHBURG COMMUTER RAIL LINE
IMPROVEMENT PROJECT
CONTRACT NO. G67CN01

SOUTH ACTON STATION
OUTBOUND ACCESS RAMP
FROM RAILROAD STREET

ISSUE	DATE	DESCRIPTION	BY	CHK'D.	APP.

HNTB 300 APOLLO DRIVE CHELMSFORD, MA 01824 (978) 905-4000

PROJECT MANAGER 5/30/12 Date

MASSACHUSETTS BAY TRANSPORTATION AUTHORITY
APPROVED BY: PROJECT MANAGER 6/30/12 Date

JACOBS 343 CONGRESS STREET BOSTON, MA 02110 (617) 242-9222

HORIZ: N/A	DES. BY JAG	DR. BY JAG	CHK. BY MWT
VERT: N/A			
DATE: 5/17/12			

PLAN NO. 168682

SHEET S-142

ISSUE

FILE NAME: P:\MBTA\2008\E2X37800\CAD\700CADD\702STATIONS\South Acton\Structural\PS&E Submission\ 142_OutL_RailroadSt.dwg
PLOT DATE: May 18, 2012 – 8:24am

NOTES:

1. FOR GENERAL NOTES, SEE SHEETS S-100 AND S-101.
2. FOR ADDITIONAL DETAILS, SEE ARCHITECTURAL PLANS.
3. LIMITS OF CANOPY NOT SHOWN FOR CLARITY.
4. SUB-GRADE CONCRETE SHALL BE COATED WITH BITUMINOUS DAMP-PROOFING. ALL OTHER SURFACES SHALL BE COATED WITH A PENETRATING CONCRETE SEALER WITH EXCEPTION TO WALKWAY SURFACES.

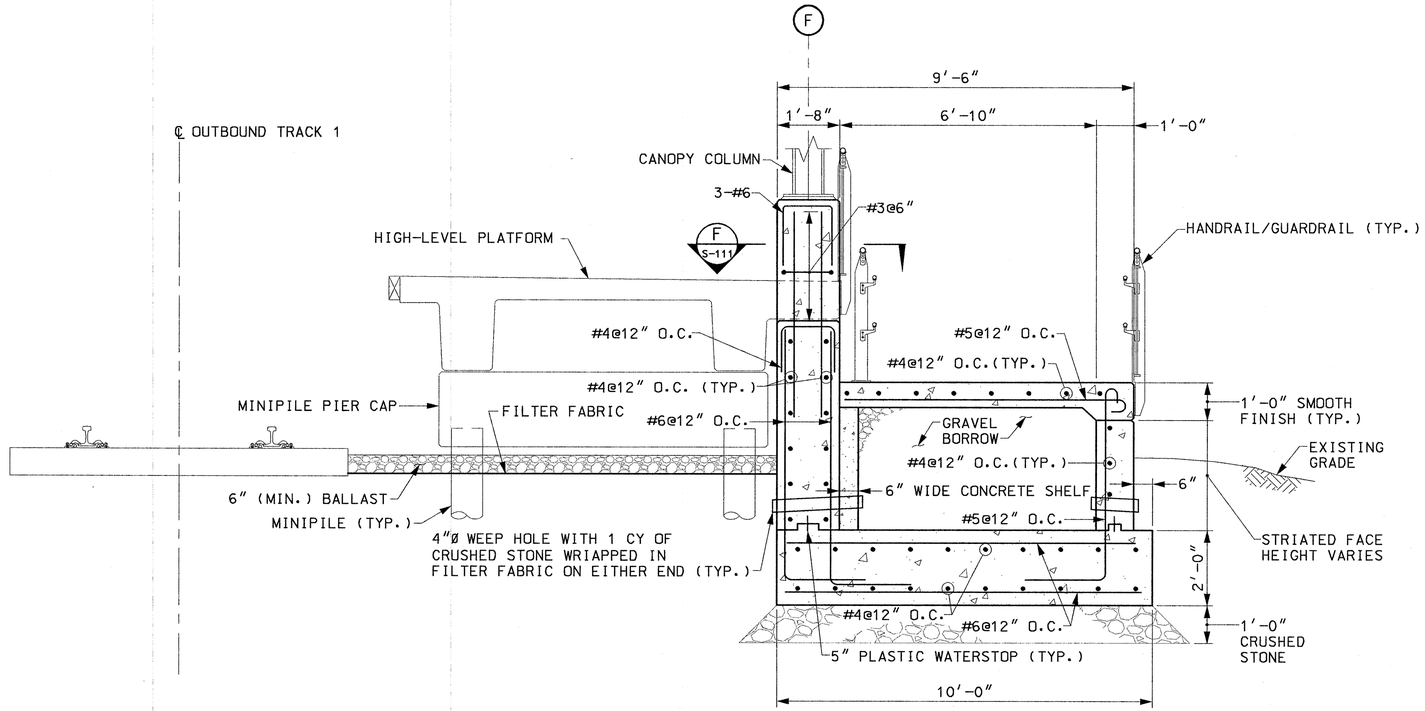

SECTION DC
SCALE: 1/2" = 1'-0"

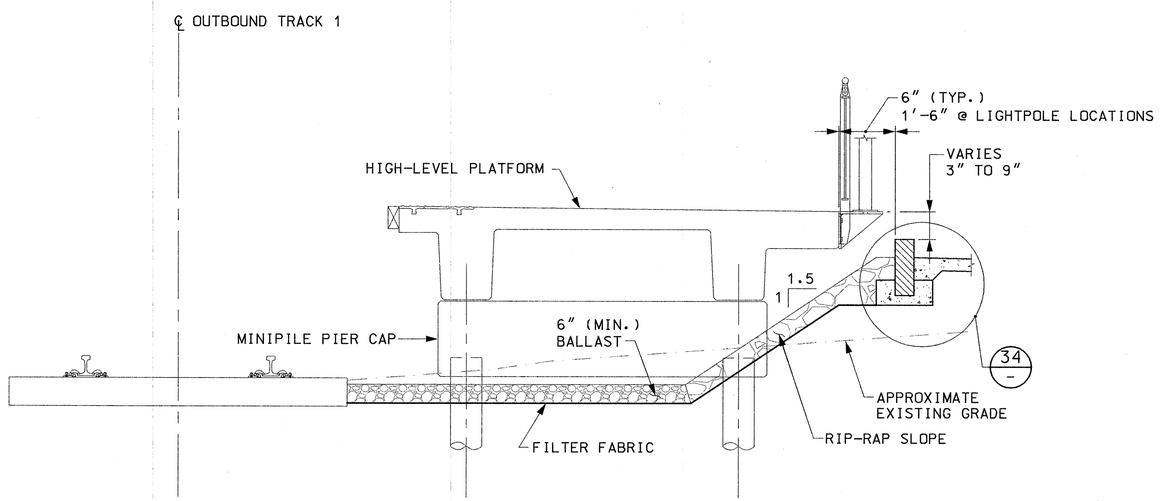

TYPICAL SECTION AT PLATFORM/PLAZA
SCALE: 1/2" = 1'-0"

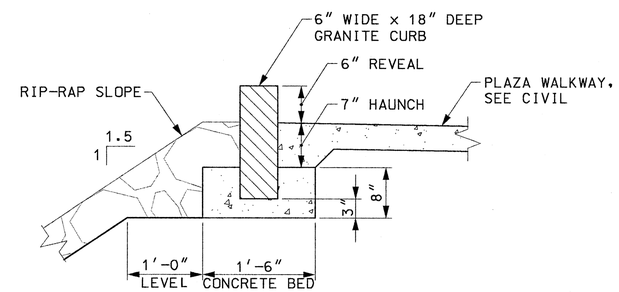

DETAIL 34
SCALE: 1" = 1'-0"

COMMONWEALTH OF MASSACHUSETTS
GREGORY T. STEFANO
STRUCTURAL No. 36726
REGISTERED PROFESSIONAL ENGINEER
5/18/2012

MASSACHUSETTS BAY TRANSPORTATION AUTHORITY

FITCHBURG COMMUTER RAIL LINE
IMPROVEMENT PROJECT
CONTRACT NO. G67CN01

SOUTH ACTON STATION
OUTBOUND SECTIONS

ISSUE	DATE	DESCRIPTION	BY	CHKD.	APP.

HNTB
300 APOLLO DRIVE
CHELMSFORD, MA 01824
(978) 905-4000
PROJECT MANAGER 5/30/12 Date

MASSACHUSETTS BAY TRANSPORTATION AUTHORITY
APPROVED BY:
PROJECT MANAGER 6/30/12 Date

JACOBS
343 CONGRESS STREET
BOSTON, MA 02110
(617) 242-9222

HORIZ: N/A	DES. BY	DR. BY	CHK. BY	PLAN NO. 168683	ISSUE
VERT: N/A	JAG	JAG	MWT		
DATE: 5/17/12				SHEET S-143	

FILE NAME: P:\MBTA\2008\E2X37800\CAD\700CADD\702STATIONS\South Acton\Structural\PS&E Submission\ 143_Out_Sections.dwg
PLOT DATE: May 18, 2012 – 8:24am

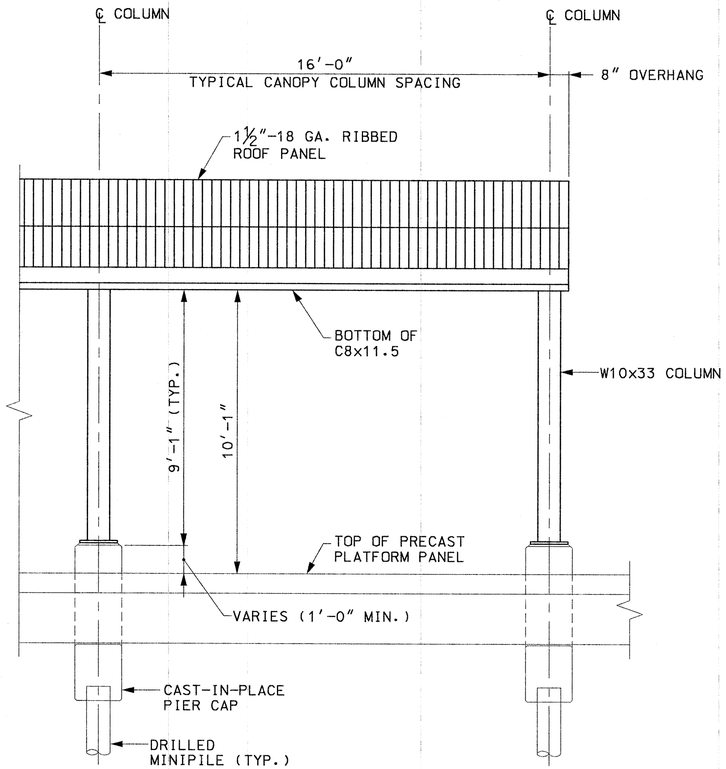

PLATFORM CANOPY ELEVATION
SCALE: 3/8″ = 1′-0″

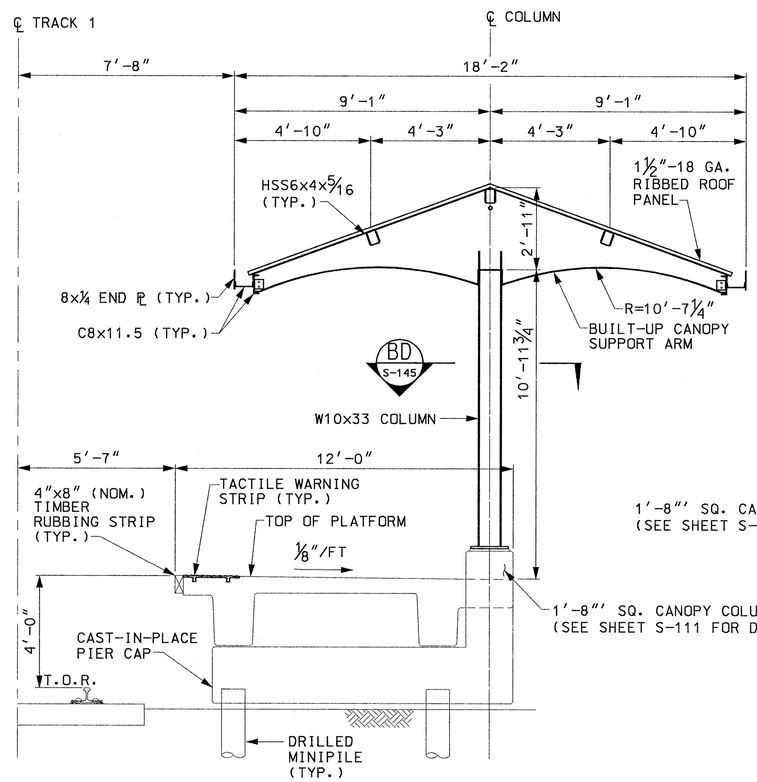

PLATFORM FULL CANOPY CROSS SECTION
SCALE: 3/8″ = 1′-0″

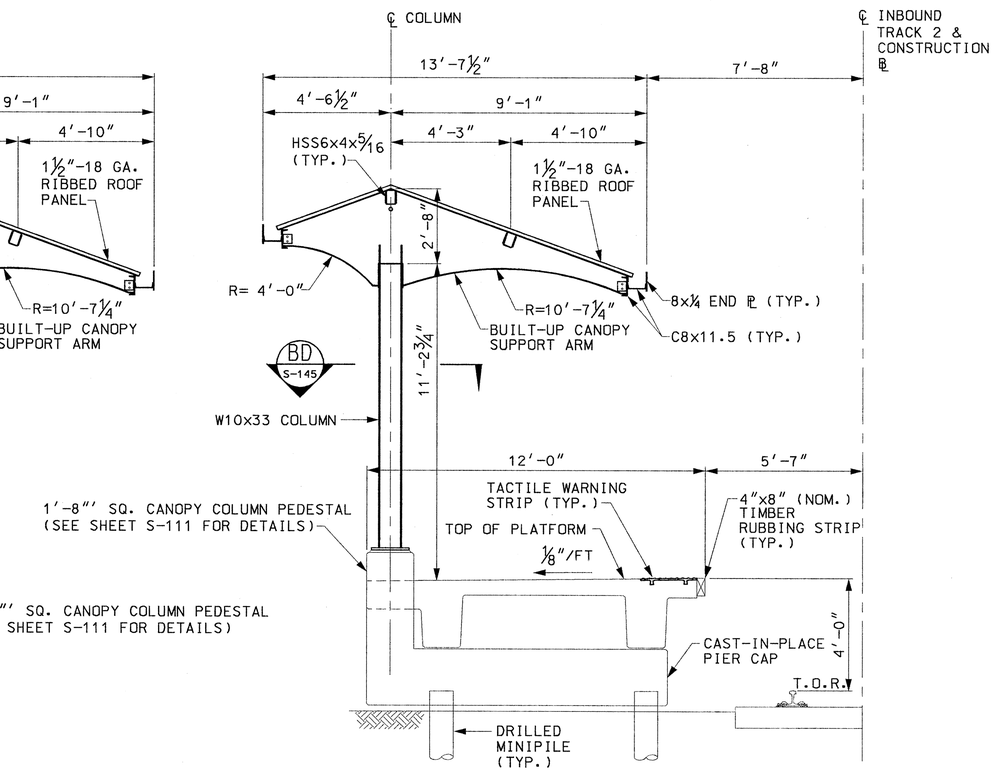

PLATFORM NARROW CANOPY CROSS SECTION
SCALE: 3/8″ = 1′-0″

NOTES:

1. FOR GENERAL STRUCTURAL NOTES, SEE SHEETS S-100 AND S-101.
2. THE CONTRACTOR SHALL COORDINATE STRUCTURAL AND ARCHITECTURAL DRAWINGS. ANY DISCREPANCIES SHALL BE BROUGHT TO THE ATTENTION OF THE ENGINEER BEFORE STEEL FABRICATION BEGINS.
3. FOR SIGN, COMMUNICATIONS AND LIGHTING DETAILS REFER TO ARCHITECTURAL AND ELECTRICAL PLANS.
4. ALL STEEL ELEMENTS SHALL BE HOT-DIP GALVANIZED, THEN PAINTED BLACK (PER CONTRACT SPECIFICATIONS) UNLESS OTHERWISE NOTED.
5. FOR ADDITIONAL CANOPY DETAILS AND CANOPY LAYOUT REFER TO THE ARCHITECTURAL, CIVIL AND ELECTRICAL PLANS.
6. FOR PLATFORM LAYOUT AND DETAILS SEE SHEETS S-106 THROUGH S-115.

COMMONWEALTH OF MASSACHUSETTS — GREGORY T. STEFANO — STRUCTURAL No. 36726 — REGISTERED PROFESSIONAL ENGINEER
5/18/2012

MASSACHUSETTS BAY TRANSPORTATION AUTHORITY

FITCHBURG COMMUTER RAIL LINE
IMPROVEMENT PROJECT
CONTRACT NO. G67CN01

SOUTH ACTON STATION
PLATFORM CANOPY DETAILS
SHEET 1

ISSUE	DATE	DESCRIPTION	BY	CHKD.	APP.

HNTB — 300 APOLLO DRIVE, CHELMSFORD, MA 01824, (978) 905-4000 — PROJECT MANAGER — Date 5/30/12

MASSACHUSETTS BAY TRANSPORTATION AUTHORITY — APPROVED BY: — PROJECT MANAGER — Date 6/30/12

JACOBS — 343 CONGRESS STREET, BOSTON, MA 02110, (617) 242-9222

HORIZ: N/A	DES. BY	DR. BY	CHK. BY	PLAN NO. 168684	ISSUE
VERT: N/A	DJM	DJM	MWT		
DATE: 5/17/12				SHEET S-144	

FILE NAME: P:\MBTA\2008\E2X37800\CAD\700CADD\702STATIONS\South Acton\Structural\PS&E Submission\ 144-147_Canopy_Dets.dwg
PLOT DATE: May 18, 2012 – 8:24am

NOTES:

1. FOR GENERAL STRUCTURAL NOTES, SEE SHEETS S-100 AND S-101.
2. FOR ADDITIONAL DETAILS SEE ARCHITECTURAL DRAWINGS.

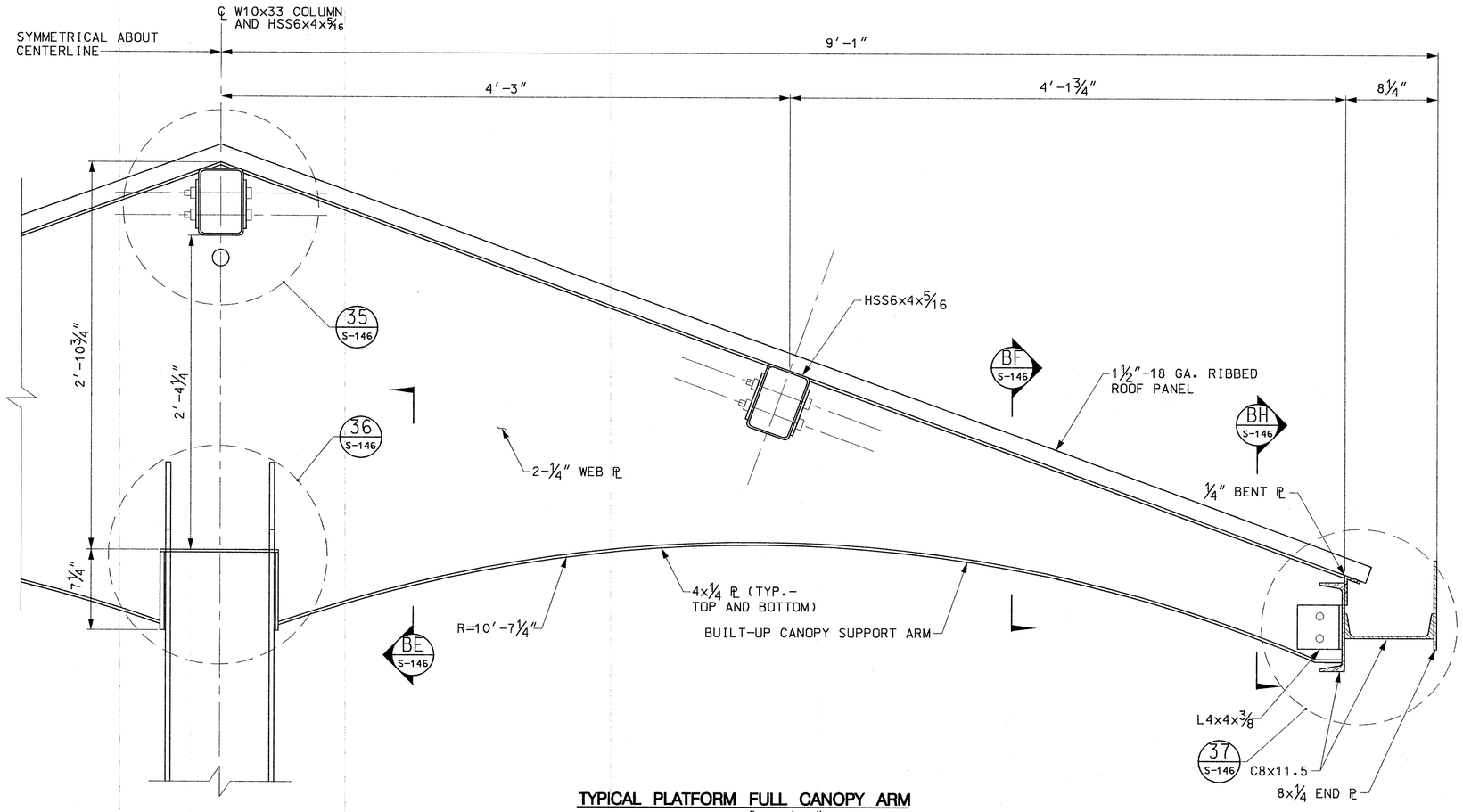

TYPICAL PLATFORM FULL CANOPY ARM

SCALE: 2" = 1'-0"

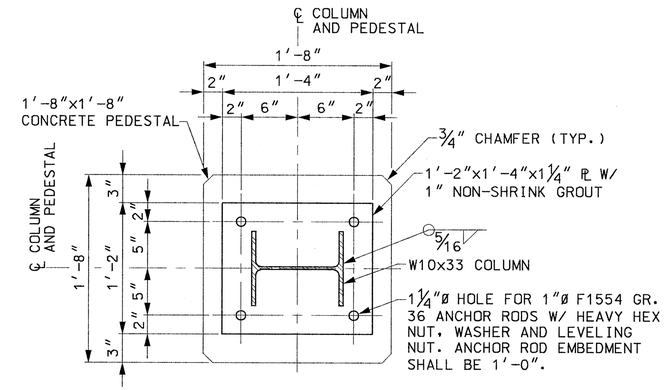

SECTION BD S-144

SCALE: 1 1/2" = 1'-0"

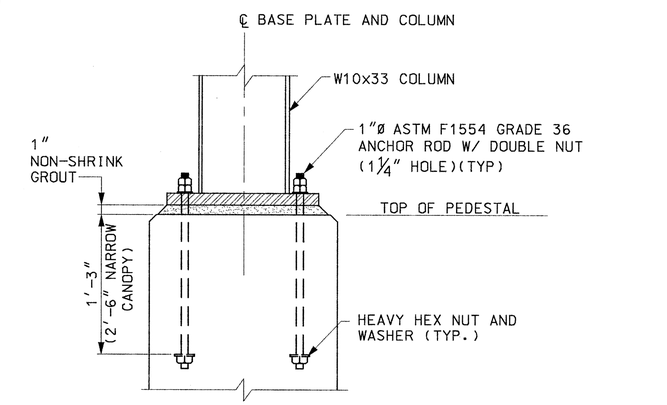

NOTE:
TOP OF PEDESTAL ELEVATIONS AT PLATFORM FULL AND NARROW CANOPIES SHALL BE 1'-0"(MIN.) ABOVE TOP OF PLATFORM.

TYPICAL ANCHOR ROD EMBEDMENT DETAIL

SCALE: 1 1/2" = 1'-0"

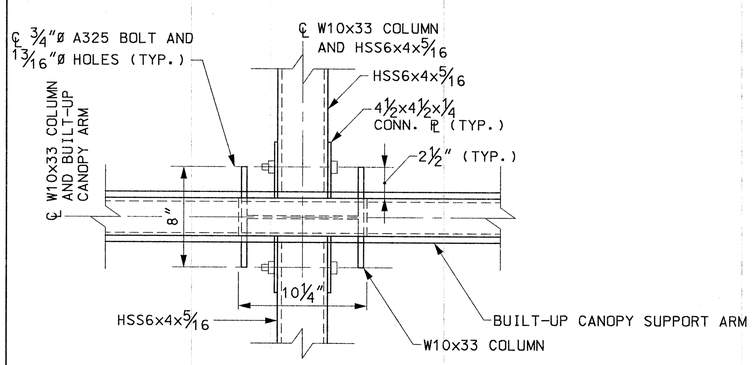

NOTE:
METAL ROOF PANELS NOT SHOWN FOR CLARITY.

PART PLAN AT END CANOPY ARM

SCALE: 2" = 1'-0"

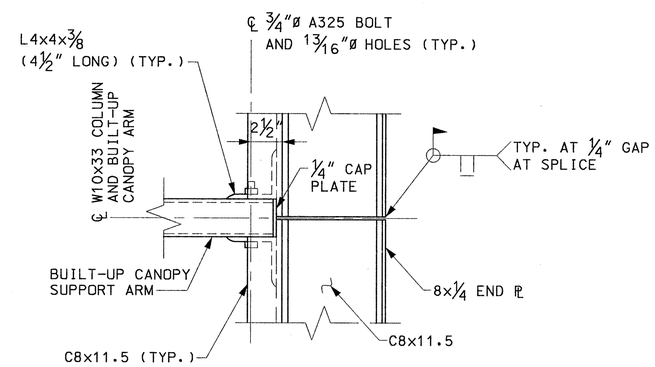

NOTE:
1 1/2" - 18 GA. METAL DECK NOT SHOWN FOR CLARITY

PART PLAN AT CANOPY ARM SUPPORT

SCALE: 2" = 1'-0"

COMMONWEALTH OF MASSACHUSETTS
GREGORY T. STEFANO
STRUCTURAL
No. 36726
REGISTERED PROFESSIONAL ENGINEER
5/18/2012

MASSACHUSETTS BAY TRANSPORTATION AUTHORITY

FITCHBURG COMMUTER RAIL LINE
IMPROVEMENT PROJECT
CONTRACT NO. G67CN01

SOUTH ACTON STATION PLATFORM CANOPY DETAILS SHEET 2

ISSUE	DATE	DESCRIPTION	BY	CHKD.	APP.

HNTB
300 APOLLO DRIVE
CHELMSFORD, MA 01824
(978) 905-4000

PROJECT MANAGER 5/30/12 Date

MASSACHUSETTS BAY TRANSPORTATION AUTHORITY
APPROVED BY:
PROJECT MANAGER 6/3/12 Date

JACOBS
343 CONGRESS STREET
BOSTON, MA 02110
(617) 242-9222

HORIZ: N/A	DES. BY	DR. BY	CHK. BY	PLAN NO. 168685	ISSUE
VERT: N/A	DJM	DJM	MWT		
DATE: 5/17/12				SHEET S-145	

FILE NAME: P:\MBTA\2008\E2X37800\CAD\700CADD\702STATIONS\South Acton\Structural\PS&E Submission\ 144-147_Canopy_Dets.dwg
PLOT DATE: May 18, 2012 - 8:24am

NOTES:

1. FOR GENERAL STRUCTURAL NOTES, SEE SHEETS S-100 AND S-101.
2. FOR ADDITIONAL DETAILS SEE ARCHITECTURAL DRAWINGS.

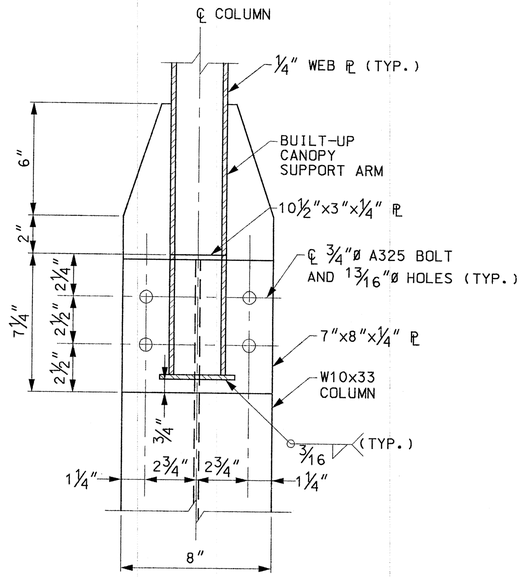

SECTION BE / S-145
SCALE: 3" = 1'-0"

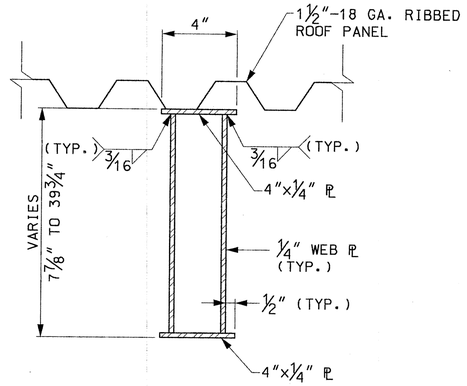

SECTION BF BF BF / S-138 S-139 S-145
SCALE: 3" = 1'-0"

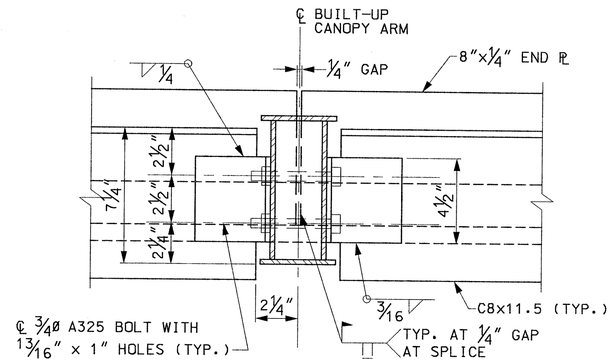

SECTION BH BH BH / S-138 S-139 S-145
SCALE: 3" = 1'-0"

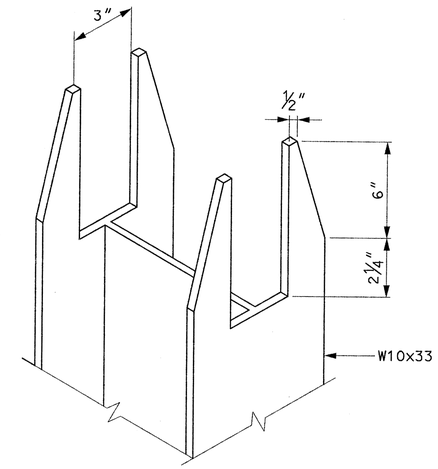

DETAIL AT TOP OF CANOPY COLUMN
SCALE: NTS

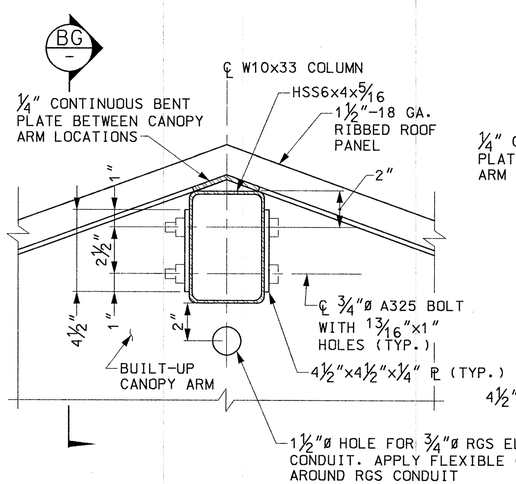

DETAIL 35 35 35 / S-138 S-139 S-145
SCALE: 3" = 1'-0"

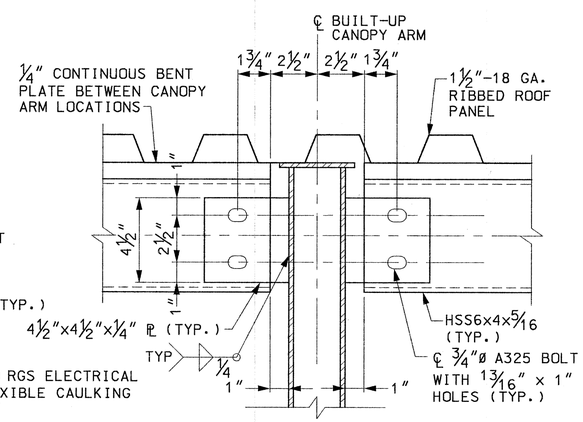

SECTION BG / -
SCALE: 3" = 1'-0"

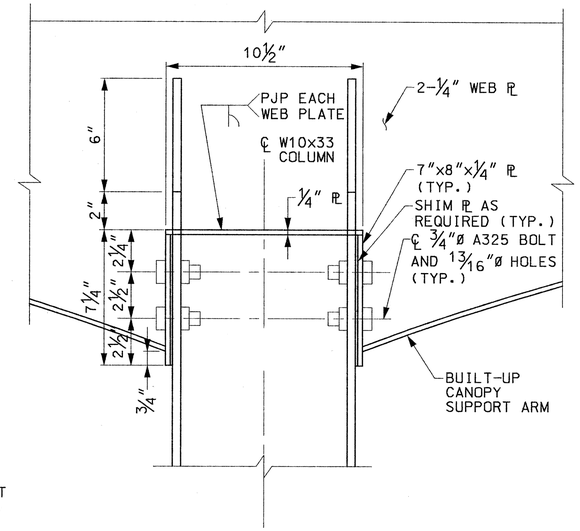

DETAIL 36 / S-145
SCALE: 3" = 1'-0"

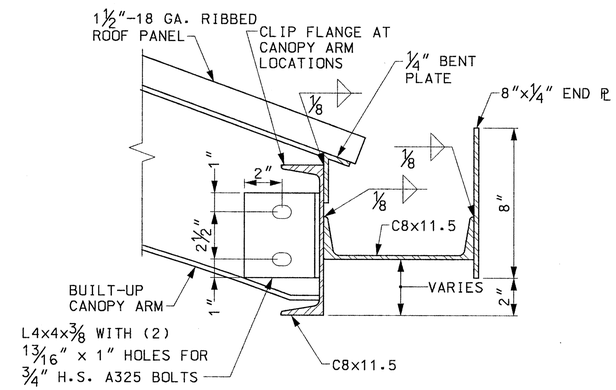

DETAIL 37 37 37 / S-138 S-139 S-145
SCALE: 3" = 1'-0"

COMMONWEALTH OF MASSACHUSETTS — GREGORY T. STEFANO — STRUCTURAL No. 36726 — REGISTERED PROFESSIONAL ENGINEER
5/18/2012

MASSACHUSETTS BAY TRANSPORTATION AUTHORITY

FITCHBURG COMMUTER RAIL LINE
IMPROVEMENT PROJECT
CONTRACT NO. G67CN01

SOUTH ACTON STATION PLATFORM CANOPY DETAILS SHEET 3

ISSUE	DATE	DESCRIPTION	BY	CHKD.	APP.

HNTB — 300 APOLLO DRIVE, CHELMSFORD, MA 01824, (978) 905-4000
PROJECT MANAGER — Date 5/30/12

MASSACHUSETTS BAY TRANSPORTATION AUTHORITY
APPROVED BY: PROJECT MANAGER — Date 6/30/12

JACOBS — 343 CONGRESS STREET, BOSTON, MA 02110, (617) 242-9222

HORIZ: N/A	DES. BY	DR. BY	CHK. BY	PLAN NO. 168686	ISSUE
VERT: N/A	DJM	DJM	MWT		
DATE: 5/17/12				SHEET S-146	

FILE NAME: P:\MBTA\2008\E2X37800\CAD\700CADD\702STATIONS\South Acton\Structural\PS&E Submission\ 144-147_Canopy_Dets.dwg
PLOT DATE: May 18, 2012 – 8:24am

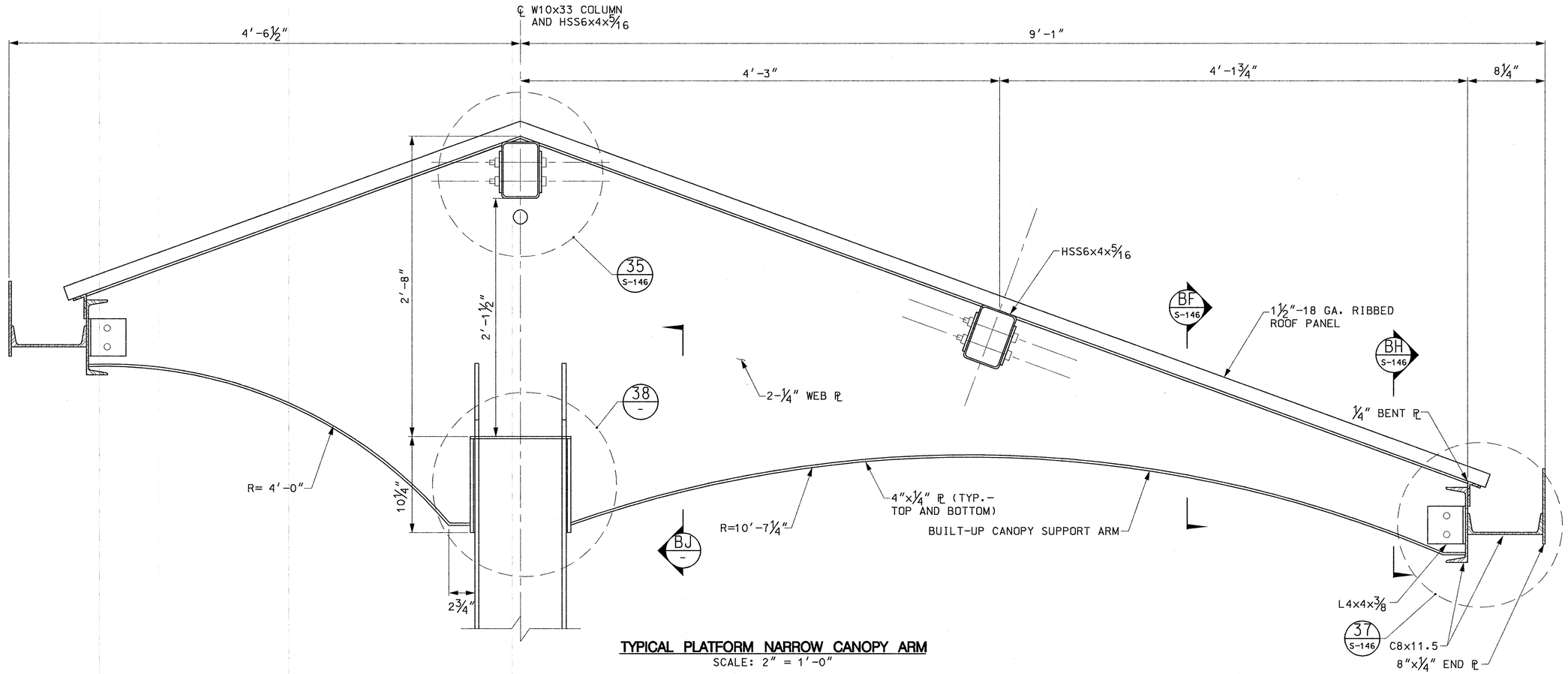

TYPICAL PLATFORM NARROW CANOPY ARM

SCALE: 2" = 1'-0"

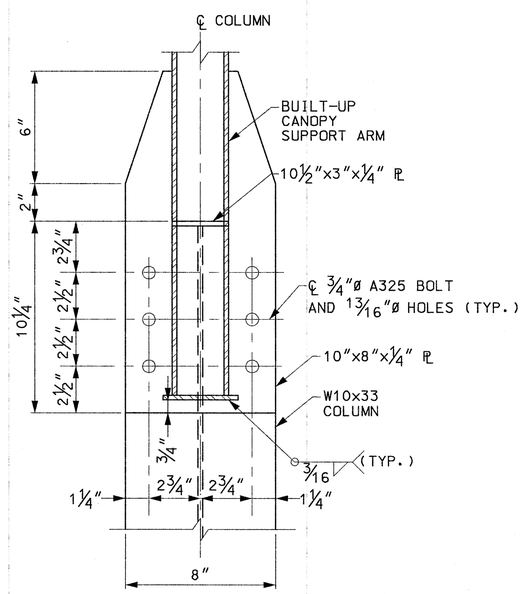

SECTION

SCALE: 3" = 1'-0" BJ -

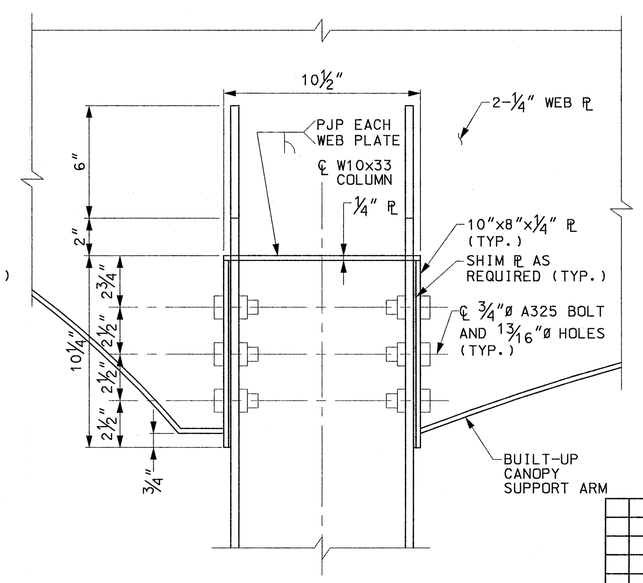

DETAIL

SCALE: 3" = 1'-0" 38 -

NOTES:

1. FOR GENERAL STRUCTURAL NOTES, SEE SHEETS S-100 AND S-101.
2. FOR ADDITIONAL DETAILS SEE ARCHITECTURAL DRAWINGS.

COMMONWEALTH OF MASSACHUSETTS
GREGORY T. STEFANO
STRUCTURAL
No. 36726
REGISTERED
PROFESSIONAL ENGINEER
5/18/2012

MASSACHUSETTS BAY TRANSPORTATION AUTHORITY

FITCHBURG COMMUTER RAIL LINE
IMPROVEMENT PROJECT
CONTRACT NO. G67CN01

SOUTH ACTON STATION
PLATFORM CANOPY DETAILS
SHEET 4

ISSUE	DATE	DESCRIPTION	BY	CHKD.	APP.

HNTB
300 APOLLO DRIVE
CHELMSFORD, MA 01824
(978) 905-4000

PROJECT MANAGER — Date

MASSACHUSETTS BAY TRANSPORTATION AUTHORITY
APPROVED BY:
PROJECT MANAGER — Date 6/30/12

JACOBS
343 CONGRESS STREET
BOSTON, MA 02110
(617) 242-9222

	DES. BY	DR. BY	CHK. BY
HORIZ: N/A	DJM	DJM	MWT
VERT: N/A			
DATE: 5/17/12			

PLAN NO. 168687
SHEET S-147
ISSUE

FILE NAME: P:\MBTA\2008\E2X37800\CAD\700CADD\702STATIONS\South Acton\Structural\PS&E Submission\ 144-147_Canopy_Dets.dwg
PLOT DATE: May 18, 2012 – 8:24am

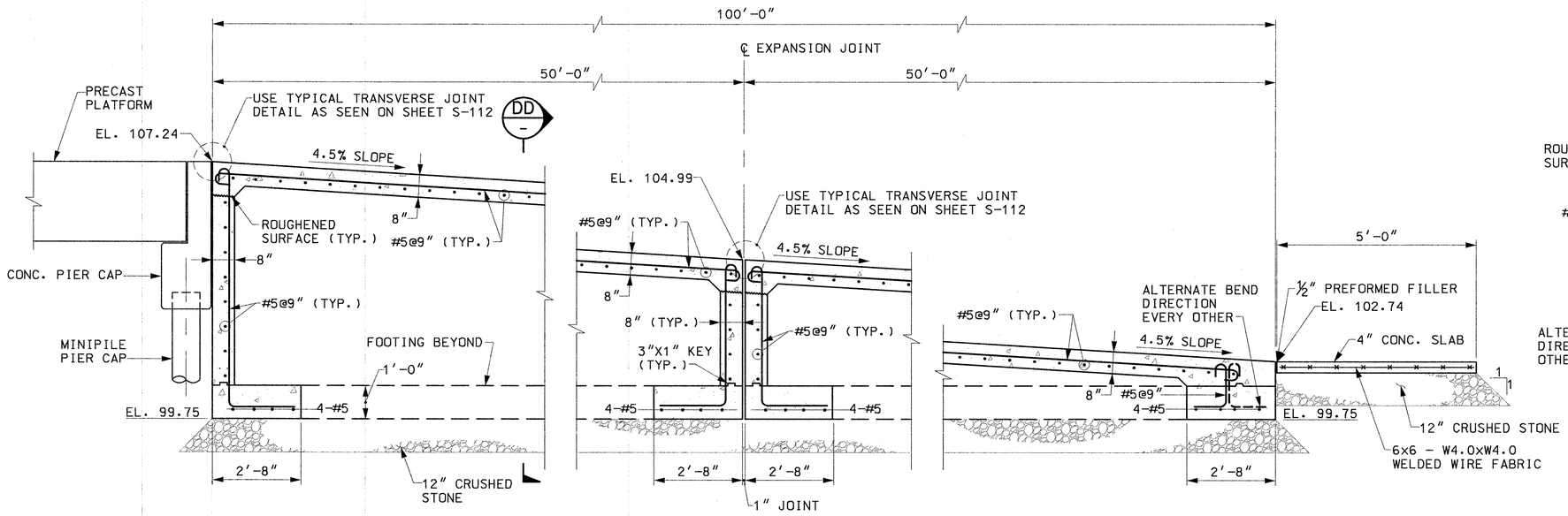

INBOUND EGRESS RAMP LONGITUDINAL SECTION

SCALE: 1/2" = 1'-0"

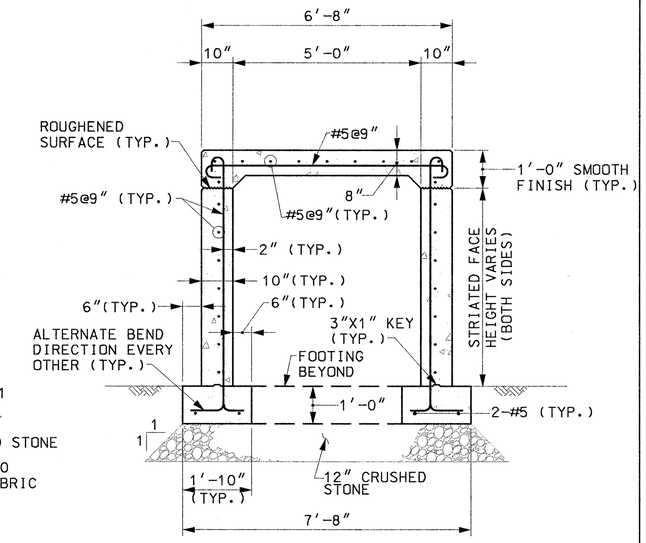

SECTION DD

SCALE: 1/2" = 1'-0"

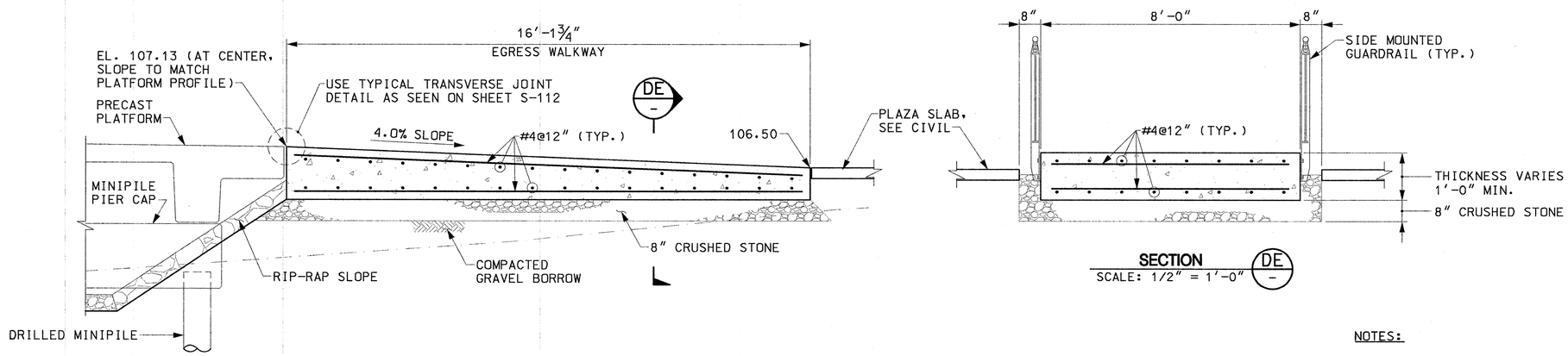

OUTBOUND EGRESS RAMP LONGITUDINAL SECTION

SCALE: 1/2" = 1'-0"

SECTION DE

SCALE: 1/2" = 1'-0"

NOTES:

1. FOR GENERAL STRUCTURAL NOTES, SEE SHEETS S-100 AND S-101.
2. ALL SUB-GRADE CONCRETE SHALL BE COATED WITH BITUMINOUS DAMP-PROOFING. ALL OTHER CONCRETE SURFACES SHALL BE TREATED WITH A PENETRATING CONCRETE SEALER WITH EXCEPTION TO WALKWAY SURFACES.

COMMONWEALTH OF MASSACHUSETTS
GREGORY T. STEFANO
STRUCTURAL
No. 36726
REGISTERED PROFESSIONAL ENGINEER
5/18/2012

MASSACHUSETTS BAY TRANSPORTATION AUTHORITY

FITCHBURG COMMUTER RAIL LINE
IMPROVEMENT PROJECT
CONTRACT NO. G67CN01

SOUTH ACTON STATION EGRESS RAMP DETAILS

ISSUE	DATE	DESCRIPTION	BY	CHKD.	APP.

HNTB 300 APOLLO DRIVE CHELMSFORD, MA 01824 (978) 905-4000

PROJECT MANAGER 5/30/12 Date

MASSACHUSETTS BAY TRANSPORTATION AUTHORITY

APPROVED BY: PROJECT MANAGER 6/30/12 Date

JACOBS 343 CONGRESS STREET BOSTON, MA 02110 (617) 242-9222

HORIZ: N/A	DES. BY	DR. BY	CHK. BY	PLAN NO. 168688	ISSUE
VERT: N/A	JAG	JAG	MWT		
DATE: 5/17/12				SHEET S-148	

FILE NAME: P:\MBTA\2008\EZX3780\CAD\700CADD\702STATIONS\South Acton\Structural\PS&E Submission\ 148_Egress_Ramps.dwg
PLOT DATE: May 18, 2012 - 8:24am

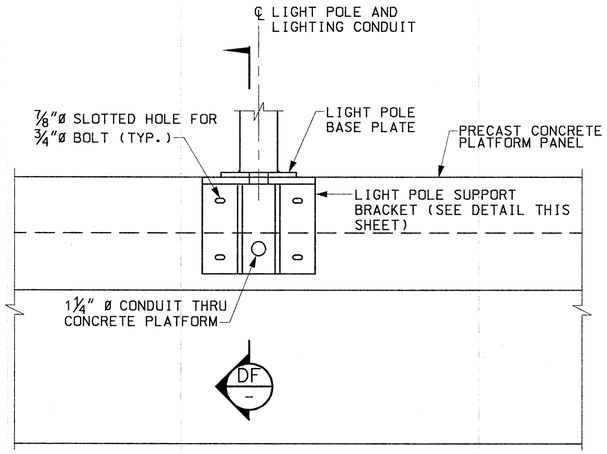

LIGHT POLE SUPPORT BRACKET ELEVATION

SCALE: 1 1/2" = 1'-0"

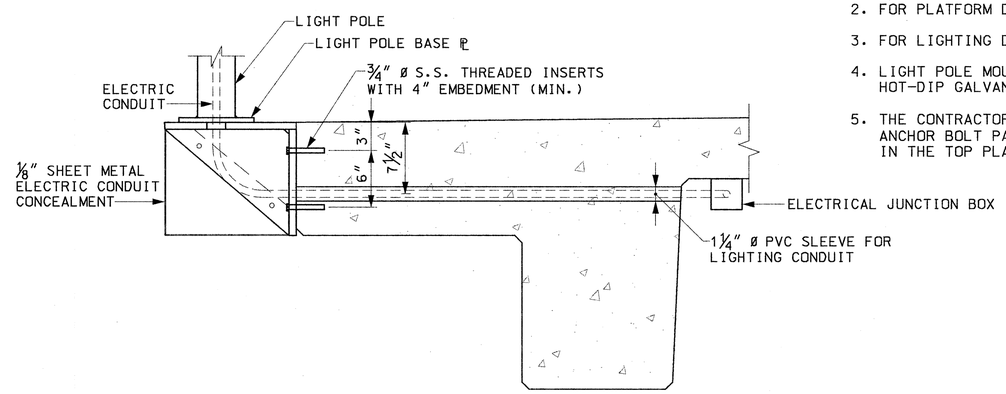

SECTION DF -

SCALE: 1 1/2" = 1'-0"

NOTES:

1. FOR GENERAL STRUCTURAL NOTES, SEE SHEETS S-100 AND S-101.
2. FOR PLATFORM DETAILS, SEE SHEETS S-112 THROUGH S-115.
3. FOR LIGHTING DETAILS, SEE ELECTRICAL AND ARCHITECTURAL PLANS.
4. LIGHT POLE MOUNTING BRACKET AND CONDUIT CONCEALMENT SHALL BE HOT-DIP GALVANIZED.
5. THE CONTRACTOR SHALL COORDINATE THE LIGHT POLE MANUFACTURER'S ANCHOR BOLT PATTERN WITH THE CONNECTING ANCHOR BOLT PATTERN IN THE TOP PLATE OF THE MOUNTING BRACKET.

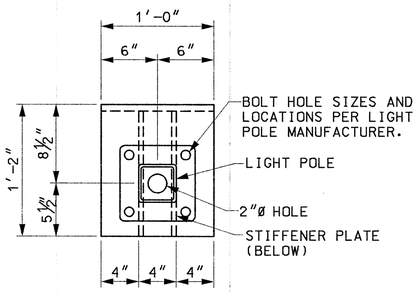

LIGHT POLE BRACKET-PLAN

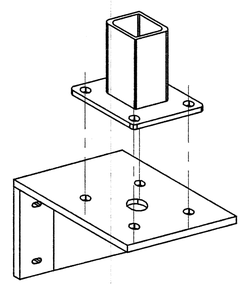

ISOMETRIC

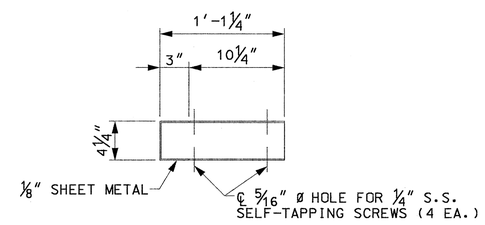

PLAN

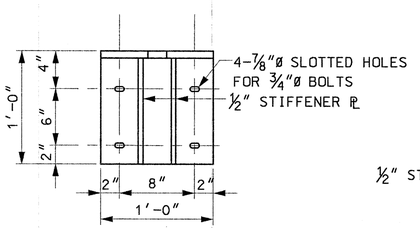

FRONT ELEVATION

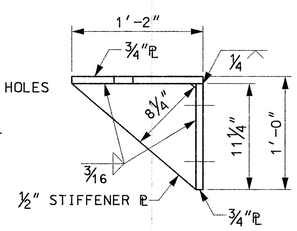

SIDE ELEVATION

TYPICAL LIGHT POLE MOUNTING BRACKET AND BASE PLATE DETAIL

SCALE: 1 1/2" = 1'-0"

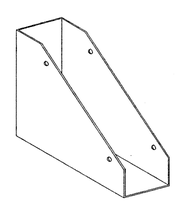

ISOMETRIC

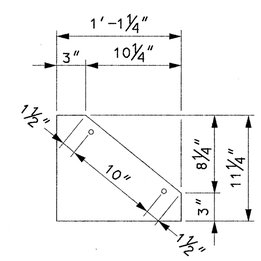

SIDE ELEVATION

TYPICAL CONDUIT CONCEALMENT DETAIL

SCALE: 1 1/2" = 1'-0"

COMMONWEALTH OF MASSACHUSETTS
GREGORY T. STEFANO
STRUCTURAL No. 36726
REGISTERED PROFESSIONAL ENGINEER
5/18/2012

MASSACHUSETTS BAY TRANSPORTATION AUTHORITY

FITCHBURG COMMUTER RAIL LINE
IMPROVEMENT PROJECT
CONTRACT NO. G67CN01

SOUTH ACTON STATION
LIGHT POLE BRACKET DETAILS

ISSUE	DATE	DESCRIPTION	BY	CHKD.	APP.

HNTB
300 APOLLO DRIVE
CHELMSFORD, MA 01824
(978) 905-4000

PROJECT MANAGER — Date 5/18/12

MASSACHUSETTS BAY TRANSPORTATION AUTHORITY
APPROVED BY:
PROJECT MANAGER — Date 6/3/12

JACOBS
343 CONGRESS STREET
BOSTON, MA 02110
(617) 242-9222

HORIZ: N/A
VERT: N/A
DATE: 5/17/12

DES. BY	DR. BY	CHK. BY
JAG	JAG	MWT

PLAN NO. 168689
SHEET S-149
ISSUE

FILE NAME: P:\MBTA\2008\E2X37800\CAD\700CADD\702STATIONS\South Acton\Structural\PS&E Submission\ 149_Light_Pole_Bracket.dwg
PLOT DATE: May 18, 2012 - 8:24am

NOTES:

1. FOR GENERAL STRUCTURAL NOTES, SEE SHEET S-100 AND S-101.
2. FOR ADDITIONAL DETAILS AND SIGN LOCATIONS, SEE ARCHITECTURAL DRAWINGS.
3. THE CONTRACTOR SHALL COORDINATE STRUCTURAL AND ARCHITECTURAL DRAWINGS. ANY DISCREPANCIES BETWEEN THE STRUCTURAL AND ARCHITECTURAL DRAWINGS SHALL BE BROUGHT TO THE ATTENTION OF THE ENGINEER PRIOR TO STEEL FABRICATION.

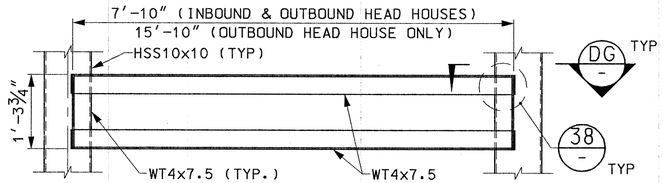

STATION SIGN: TYPE A – ELEVATION
SCALE: ¾" = 1'-0"

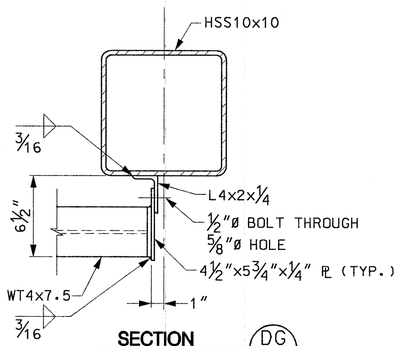

SECTION DG
SCALE: 2" = 1'-0"

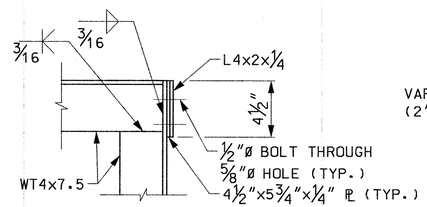

DETAIL 38
SCALE: 2" = 1'-0"

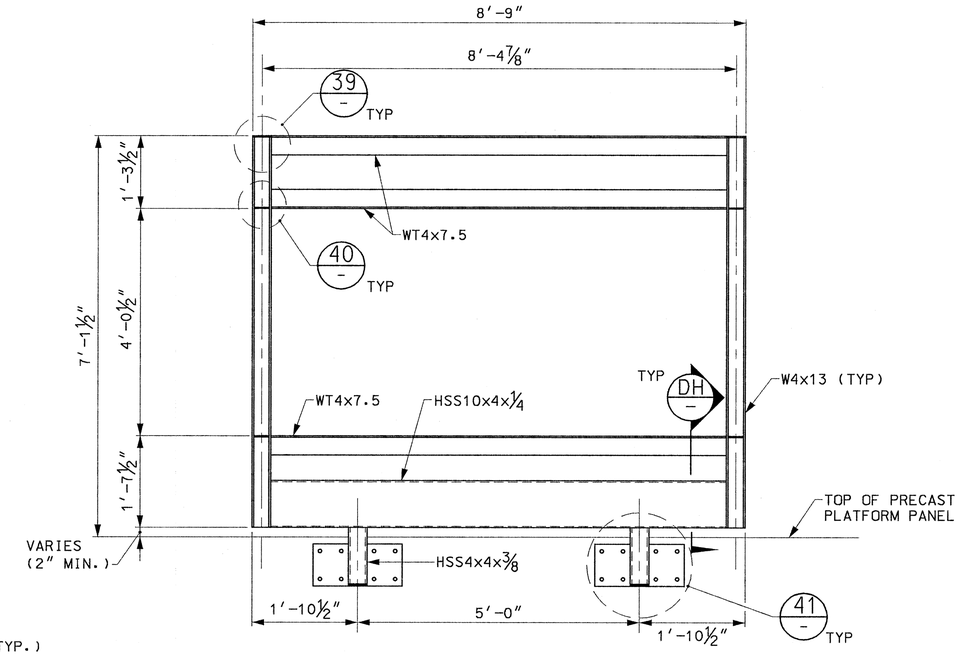

2 BAY SIGN: TYPE B – ELEVATION
SCALE: ¾" = 1'-0"

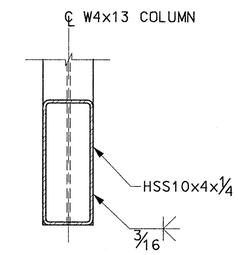

SECTION DH
SCALE: 2" = 1'-0"

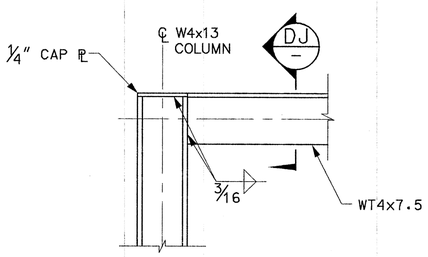

DETAIL 39
SCALE: 2" = 1'-0"

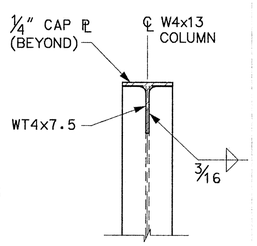

SECTION DJ
SCALE: 2" = 1'-0"

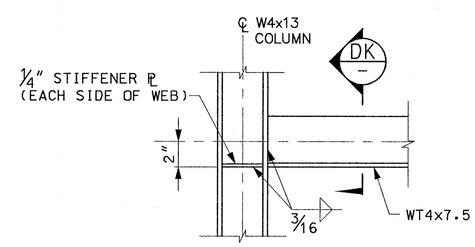

DETAIL 40
SCALE: 2" = 1'-0"

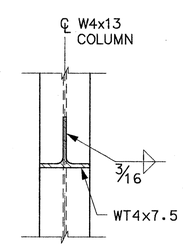

SECTION DK
SCALE: 2" = 1'-0"

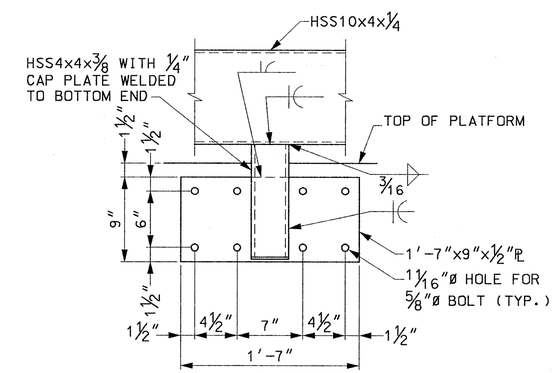

DETAIL 41
SCALE: 1½" = 1'-0"

COMMONWEALTH OF MASSACHUSETTS
GREGORY T. STEFANO
STRUCTURAL
No. 36728
REGISTERED PROFESSIONAL ENGINEER
5/18/2012

MASSACHUSETTS BAY TRANSPORTATION AUTHORITY

FITCHBURG COMMUTER RAIL LINE
IMPROVEMENT PROJECT
CONTRACT NO. G67CN01

SOUTH ACTON STATION
BENCH/WINDSCREEN AND SIGN
DETAILS SHEET 1

ISSUE	DATE	DESCRIPTION	BY	CHKD.	APP.

HNTB
300 APOLLO DRIVE
CHELMSFORD, MA 01824
(978) 905-4000
PROJECT MANAGER 5/30/12 Date

MASSACHUSETTS BAY TRANSPORTATION AUTHORITY
APPROVED BY:
PROJECT MANAGER 6/29/12 Date

JACOBS
343 CONGRESS STREET
BOSTON, MA 02110
(617) 242-9222

HORIZ: N/A	DES. BY	DR. BY	CHK. BY
VERT: N/A	DJM	DJM	MWT
DATE: 5/17/12			

PLAN NO. 168690
SHEET S-150
ISSUE

FILE NAME: P:\MBTA\2008\E2X37800\CAD\700CADD\702STATIONS\South Acton\Structural\PS&E Submission\ 150-153_Bench_Sign_Dets.dwg
PLOT DATE: May 18, 2012 – 8:24am

NOTES:

1. FOR GENERAL STRUCTURAL NOTES, SEE SHEET S-100 AND S-101.
2. FOR ADDITIONAL DETAILS AND SIGN LOCATIONS, SEE ARCHITECTURAL DRAWINGS.
3. THE CONTRACTOR SHALL COORDINATE STRUCTURAL AND ARCHITECTURAL DRAWINGS, ANY DISCREPANCIES BETWEEN THE STRUCTURAL AND ARCHITECTURAL DRAWINGS SHALL BE BROUGHT TO THE ATTENTION OF THE ENGINEER PRIOR TO STEEL FABRICATION.

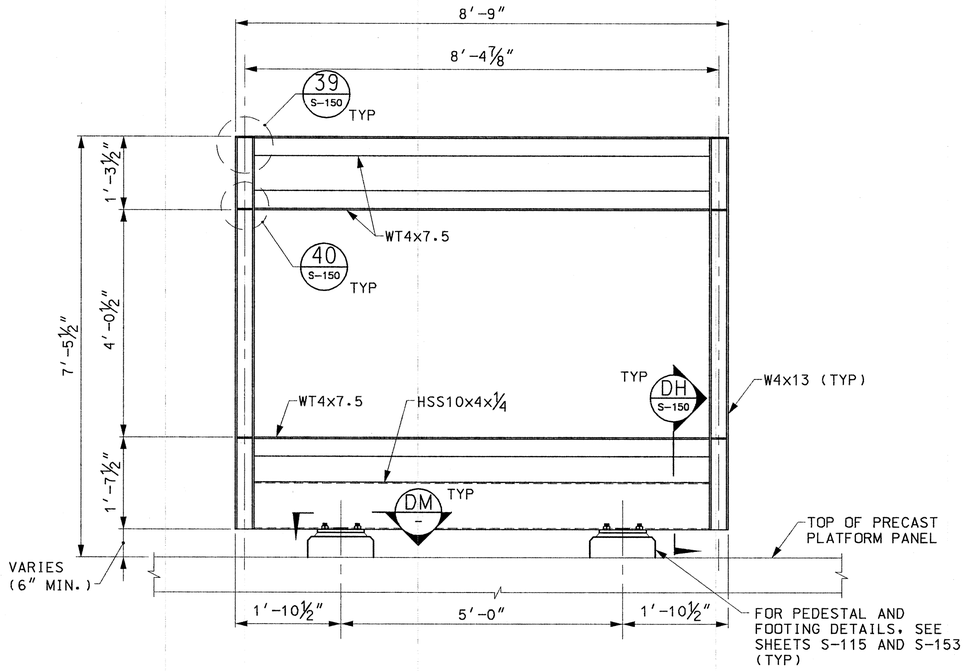

2 BAY SIGN: TYPE C – ELEVATION
SCALE: 3/4" = 1'-0"

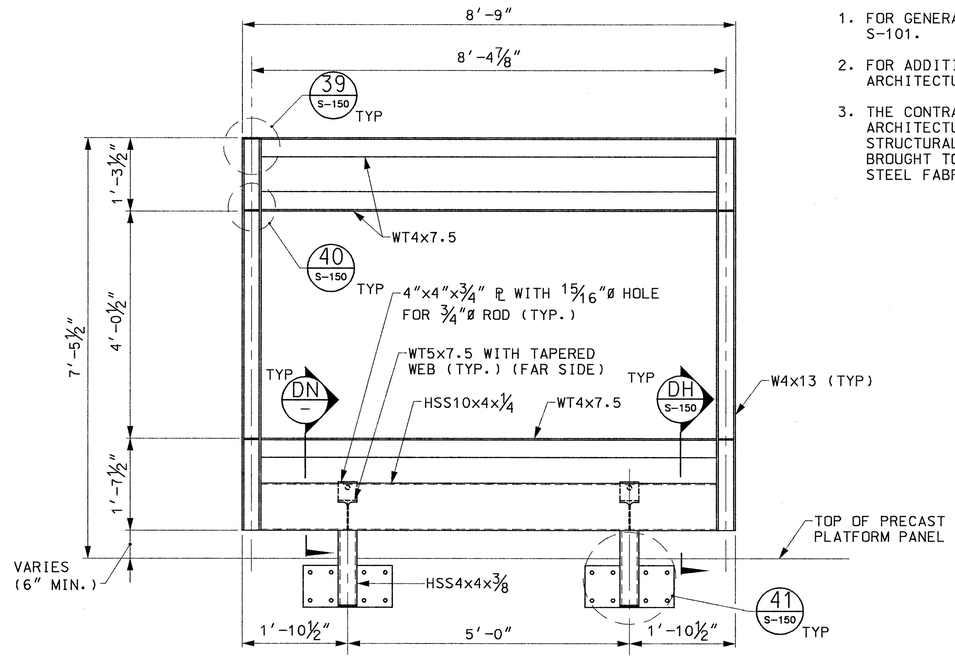

2 BAY-SINGLE BENCH: TYPE D – ELEVATION
SCALE: 3/4" = 1'-0"

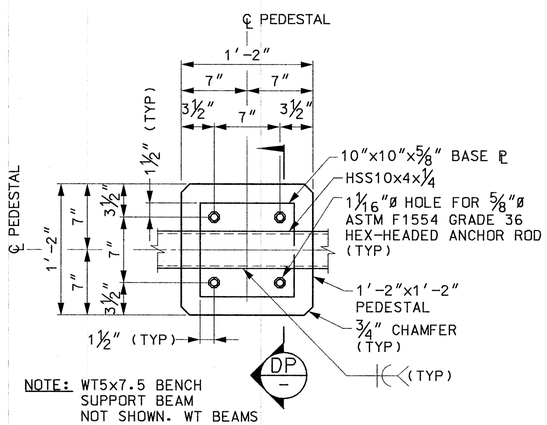

NOTE: WT5x7.5 BENCH SUPPORT BEAM NOT SHOWN. WT BEAMS AT BENCH/WINDSCREEN TYPE E ONLY.

SECTION DM - / DM S-152
SCALE: 1 1/2" = 1'-0"

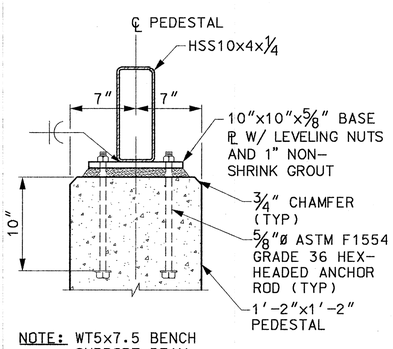

NOTE: WT5x7.5 BENCH SUPPORT BEAM NOT SHOWN. WT BEAMS AT BENCH/WINDSCREEN TYPE E ONLY.

SECTION DP -
SCALE: 1 1/2" = 1'-0"

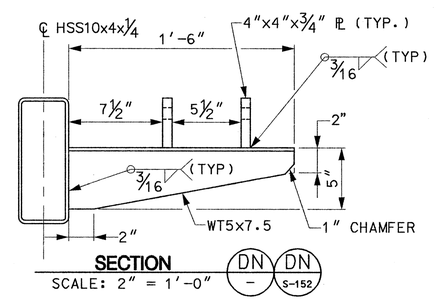

SECTION DN - / DN S-152
SCALE: 2" = 1'-0"

COMMONWEALTH OF MASSACHUSETTS
GREGORY T. STEFANO
STRUCTURAL
No. 36726
REGISTERED PROFESSIONAL ENGINEER
5/18/2012

MASSACHUSETTS BAY TRANSPORTATION AUTHORITY

FITCHBURG COMMUTER RAIL LINE
IMPROVEMENT PROJECT
CONTRACT NO. G67CN01

SOUTH ACTON STATION BENCH/WINDSCREEN AND SIGN DETAILS SHEET 2

ISSUE	DATE	DESCRIPTION	BY	CHKD.	APP.

HNTB — 300 APOLLO DRIVE CHELMSFORD, MA 01824 (978) 905-4000
PROJECT MANAGER — Date

MASSACHUSETTS BAY TRANSPORTATION AUTHORITY
APPROVED BY:
PROJECT MANAGER — Date

JACOBS — 343 CONGRESS STREET BOSTON, MA 02110 (617) 242-9222

HORIZ: N/A	DES. BY	DR. BY	CHK. BY	PLAN NO. 168691	ISSUE
VERT: N/A	DJM	DJM	MWT		
DATE: 5/17/12				SHEET S-151	

FILE NAME: P:\MBTA\2008\E2X3780\CAD\700CADD\702STATIONS\South Acton\Structural\PS&E Submission\ 150-153_Bench_Sign_Dets.dwg
PLOT DATE: May 18, 2012 – 8:24am

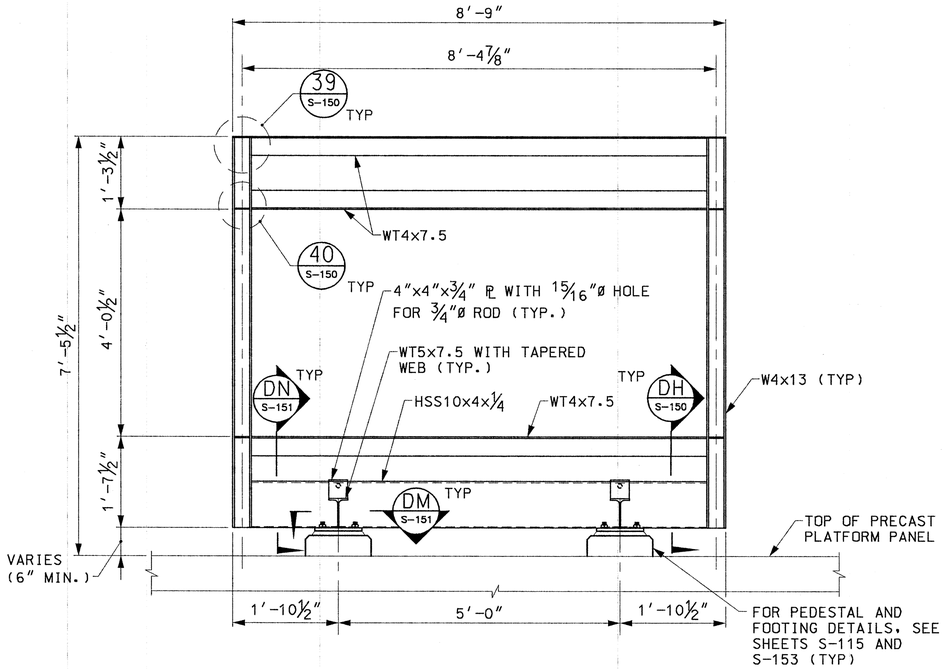

2 BAY-SINGLE BENCH: TYPE E - ELEVATION

SCALE: 3/4" = 1'-0"

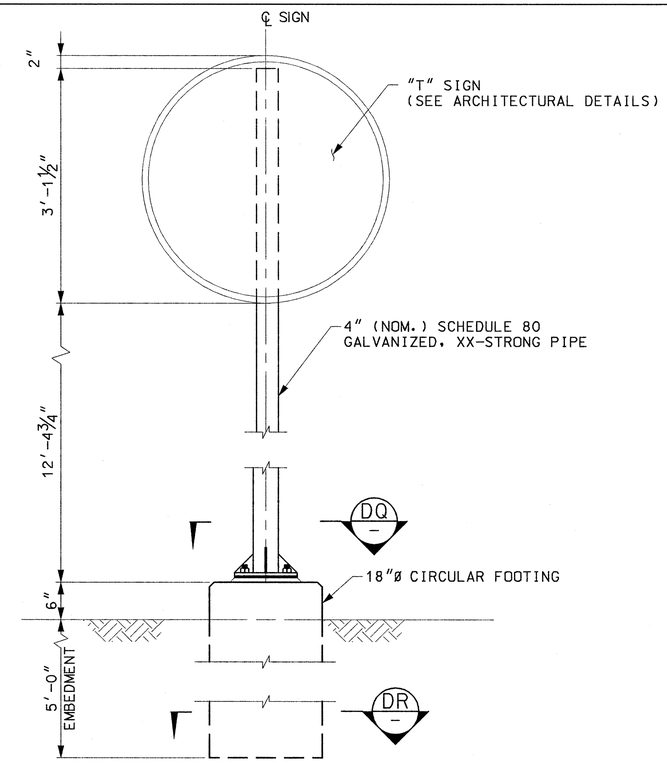

LOLLIPOP SIGN: TYPE F

SCALE: 1" = 1'-0"

NOTES:

1. FOR GENERAL STRUCTURAL NOTES, SEE SHEET S-100 AND S-101.
2. FOR ADDITIONAL DETAILS AND SIGN LOCATIONS, SEE ARCHITECTURAL DRAWINGS.
3. THE CONTRACTOR SHALL COORDINATE STRUCTURAL AND ARCHITECTURAL DRAWINGS, ANY DISCREPANCIES BETWEEN THE STRUCTURAL AND ARCHITECTURAL DRAWINGS SHALL BE BROUGHT TO THE ATTENTION OF THE ENGINEER PRIOR TO STEEL FABRICATION.

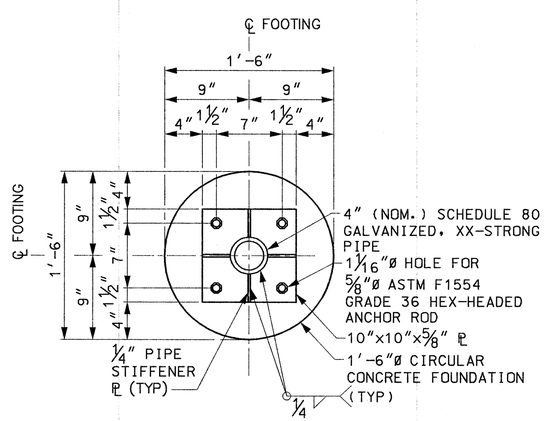

SECTION DQ

SCALE: 1 1/2" = 1'-0"

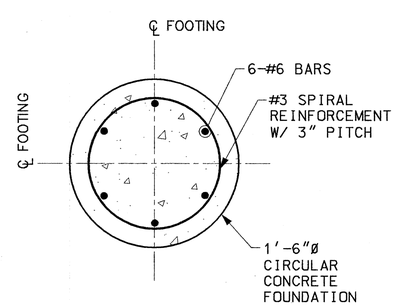

SECTION DR

SCALE: 1 1/2" = 1'-0"

COMMONWEALTH OF MASSACHUSETTS
GREGORY T. STEFANO
STRUCTURAL
No. 36726
REGISTERED
PROFESSIONAL ENGINEER
5/18/2012

MASSACHUSETTS BAY TRANSPORTATION AUTHORITY

FITCHBURG COMMUTER RAIL LINE
IMPROVEMENT PROJECT
CONTRACT NO. G67CN01

SOUTH ACTON STATION
BENCH/WINDSCREEN AND SIGN
DETAILS SHEET 3

ISSUE	DATE	DESCRIPTION	BY	CHKD.	APPR.

HNTB
300 APOLLO DRIVE
CHELMSFORD, MA 01824
(978) 905-4000

PROJECT MANAGER Date

MASSACHUSETTS BAY TRANSPORTATION AUTHORITY

APPROVED BY:
PROJECT MANAGER Date

JACOBS
343 CONGRESS STREET
BOSTON, MA 02110
(617) 242-9222

HORIZ: N/A	DES. BY	DR. BY	CHK. BY	PLAN NO. 168692	ISSUE
VERT: N/A	DJM	DJM	MWT		
DATE: 5/17/12				SHEET S-152	

FILE NAME: P:\MBTA\2008\E2X37800\CAD\700CADD\702STATIONS\South Acton\Structural\PS&E Submission\ 150-153_Bench_Sign_Dets.dwg
PLOT DATE: May 18, 2012 - 8:24am

NOTES:

1. FOR GENERAL STRUCTURAL NOTES, SEE SHEET S-100 AND S-101.
2. FOR ADDITIONAL DETAILS AND SIGN LOCATIONS, SEE ARCHITECTURAL DRAWINGS.
3. THE CONTRACTOR SHALL COORDINATE STRUCTURAL AND ARCHITECTURAL DRAWINGS, ANY DISCREPANCIES BETWEEN THE STRUCTURAL AND ARCHITECTURAL DRAWINGS SHALL BE BROUGHT TO THE ATTENTION OF THE ENGINEER PRIOR TO STEEL FABRICATION.

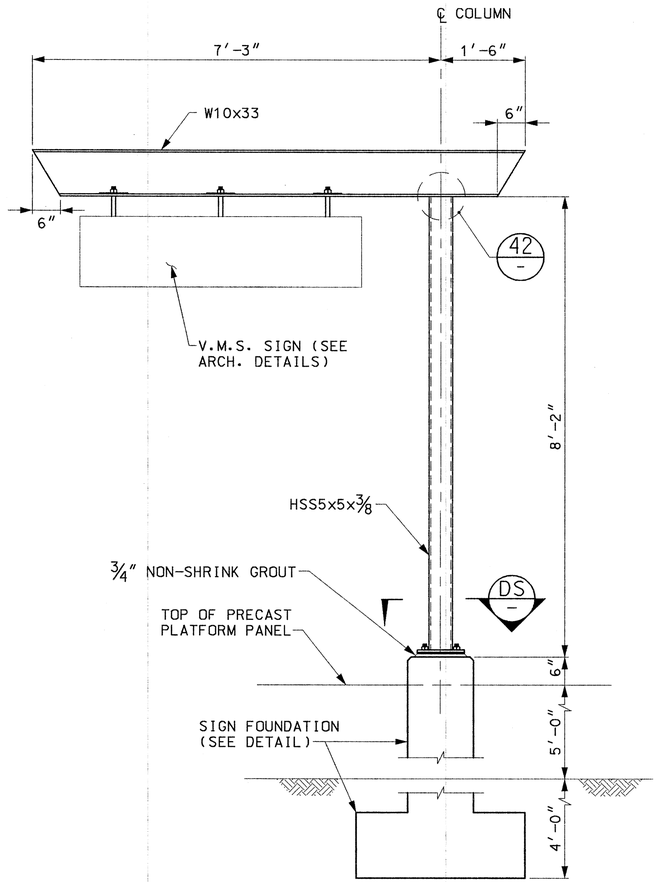

VARIABLE MESSAGE SIGN (V.M.S.) SUPPORT STRUCTURE
SCALE: 3/4" = 1'-0"

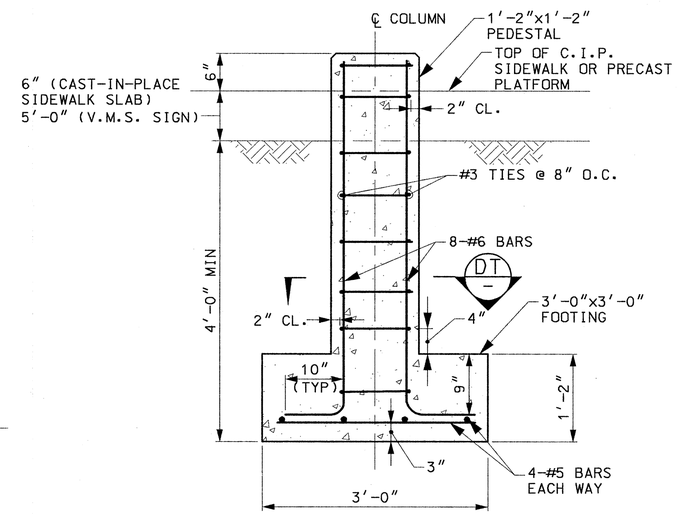

ENTRY SIGN AND SINGLE BENCH FOUNDATION SECTION
SCALE: 1" = 1'-0"

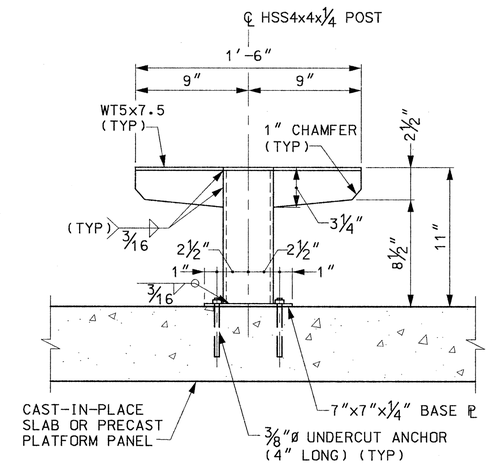

TYPICAL TYPE H BENCH
SCALE: 2" = 1'-0"

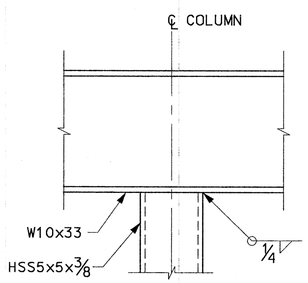

DETAIL 42
SCALE: 2" = 1'-0"

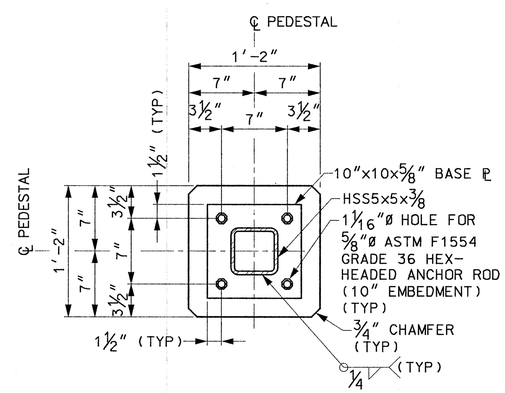

SECTION DS
SCALE: 1 1/2" = 1'-0"

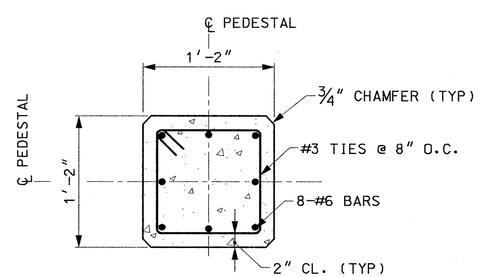

SECTION DT
SCALE: 1 1/2" = 1'-0"

COMMONWEALTH OF MASSACHUSETTS
GREGORY T. STEFANO
STRUCTURAL No. 36726
REGISTERED PROFESSIONAL ENGINEER
5/18/2012

MASSACHUSETTS BAY TRANSPORTATION AUTHORITY

FITCHBURG COMMUTER RAIL LINE IMPROVEMENT PROJECT
CONTRACT NO. G67CN01

SOUTH ACTON STATION
BENCH/WINDSCREEN AND SIGN DETAILS SHEET 4

ISSUE	DATE	DESCRIPTION	BY	CHKD.	APP.

HNTB 300 APOLLO DRIVE CHELMSFORD, MA 01824 (978) 905-4000
PROJECT MANAGER 5/30/12 Date

MASSACHUSETTS BAY TRANSPORTATION AUTHORITY
APPROVED BY:
PROJECT MANAGER 6/30/12 Date

JACOBS 343 CONGRESS STREET BOSTON, MA 02110 (617) 242-9222

HORIZ: N/A	DES. BY	DR. BY	CHK. BY	PLAN NO. 168693	ISSUE
VERT: N/A	DJM	DJM	MWT		
DATE: 5/17/12				SHEET S-153	

FILE NAME: P:\MBTA\2008\E2X37800\CAD\700CADD\702STATIONS\South Acton\Structural\PS&E Submission\ 150-153_Bench_Sign_Dets.dwg
PLOT DATE: May 18, 2012 - 8:24am

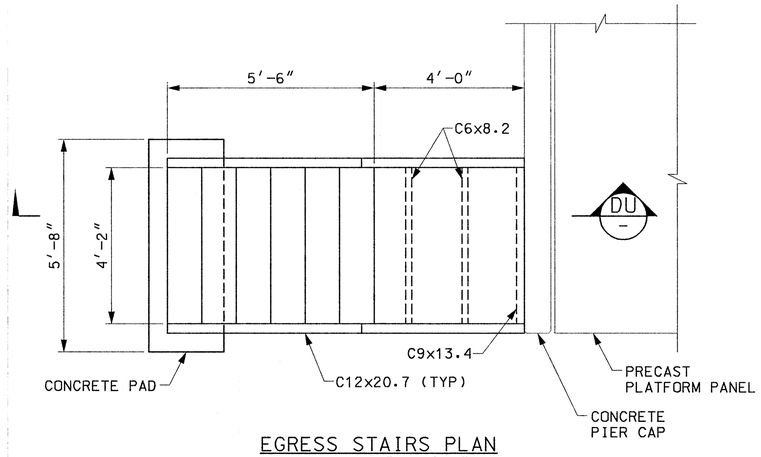

EGRESS STAIRS PLAN
SCALE: 1/2" = 1'-0"

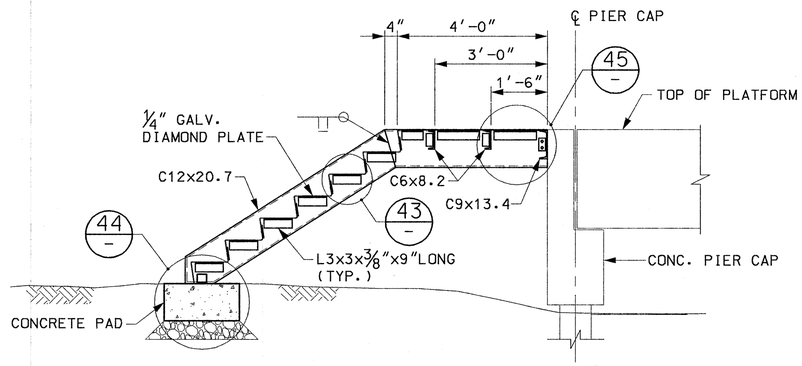

SECTION DU
SCALE: 1/2" = 1'-0"

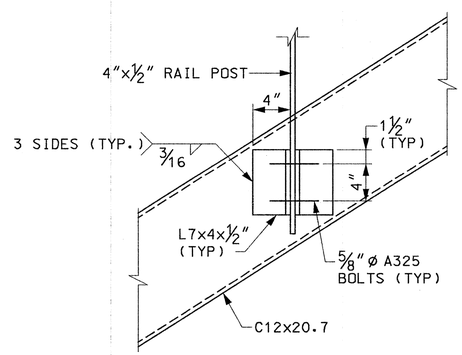

RAILING CONNECTION DETAIL
SCALE: 1 1/2" = 1'-0"

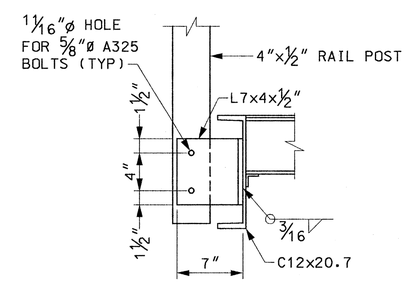

RAILING CONNECTION DETAIL
SCALE: 1 1/2" = 1'-0"

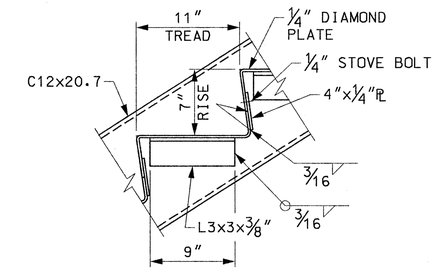

DETAIL 43
SCALE: 1 1/2" = 1'-0"

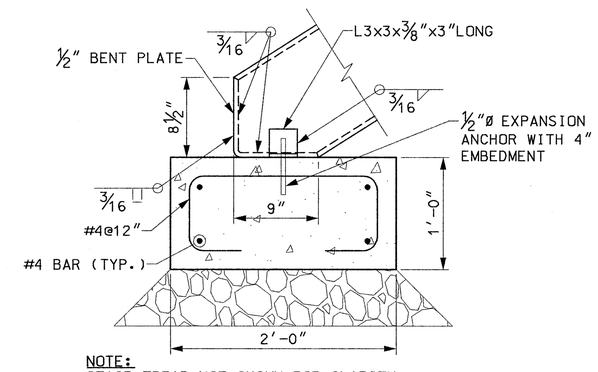

NOTE:
STAIR TREAD NOT SHOWN FOR CLARITY.

DETAIL 44
SCALE: 1 1/2" = 1'-0"

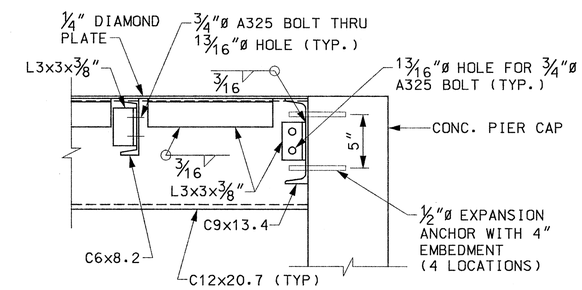

DETAIL 45
SCALE: 1 1/2" = 1'-0"

NOTES:

1. FOR GENERAL STRUCTURAL NOTES, SEE SHEETS S-100 AND S-101.
2. FOR ADDITIONAL DETAILS, SEE ARCHITECTURAL PLANS.

COMMONWEALTH OF MASSACHUSETTS
GREGORY T. STEFANO
STRUCTURAL
No. 36726
REGISTERED PROFESSIONAL ENGINEER
5/18/2012

MASSACHUSETTS BAY TRANSPORTATION AUTHORITY

FITCHBURG COMMUTER RAIL LINE
IMPROVEMENT PROJECT
CONTRACT NO. G67CN01

LITTLETON STATION EGRESS STAIR DETAILS

ISSUE	DATE	DESCRIPTION	BY	CHKD.	APP.

HNTB
300 APOLLO DRIVE
CHELMSFORD, MA 01824
(978) 905-4000
PROJECT MANAGER — Date

MASSACHUSETTS BAY TRANSPORTATION AUTHORITY
APPROVED BY:
PROJECT MANAGER — Date

JACOBS
343 CONGRESS STREET
BOSTON, MA 02110
(617) 242-9222

HORIZ: AS NOTED	DES. BY	DR. BY	CHK. BY	PLAN NO. 168694	ISSUE
VERT: AS NOTED	JAG	JAG	MWT		
DATE: 5/17/12				SHEET S-154	

FILE NAME: P:\MBTA\2008\E2X37800\CAD\700CADD\702STATIONS\South Acton\Structural\PS&E Submission\154_Egress_Dets.dwg
PLOT DATE: May 18, 2012 - 8:24am

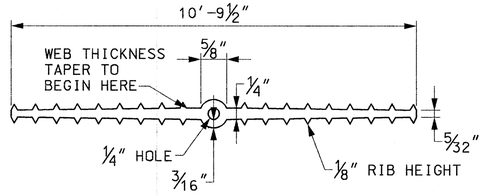

9" PLASTIC WATERSTOP
NOT TO SCALE

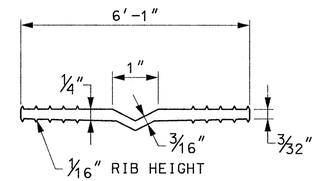

5" PLASTIC WATERSTOP
NOT TO SCALE

NOTES:

1. FOR GENERAL NOTES, SEE SHEETS S-100 AND S-101.
2. EXPANSION JOINTS IN WALLS SHALL BE SPACED AT 72' MAXIMUM UNLESS OTHERWISE NOTED AND SHALL BE LEVEL AND PLUMB.
3. CONSTRUCTION JOINTS IN WALLS SHALL BE SPACED AT 24' MAXIMUM UNLESS OTHERWISE NOTED AND SHALL BE LEVEL AND PLUMB.
4. REINFORCEMENT SHALL BE CONTINUOUS THROUGH CONSTRUCTION JOINTS AND END 2" CLEAR AT EXPANSION JOINTS.
5. FILLER MATERIAL SHALL BE FASTENED SECURELY TO ONE SIDE OF JOINT.

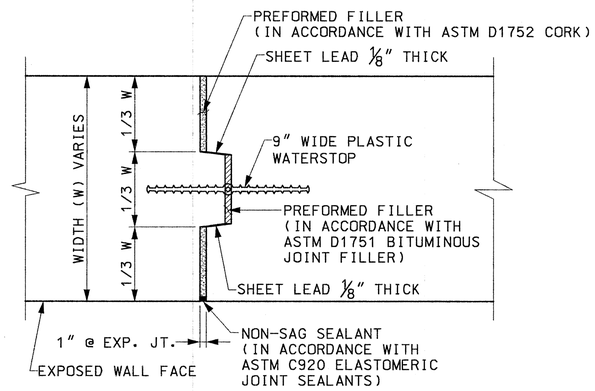

EXPANSION JOINT DETAIL
NOT TO SCALE

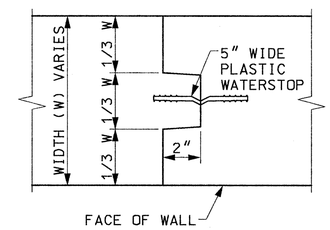

NOTE:
REINFORCEMENT SHALL BE CONTINUOUS THROUGH CONSTRUCTION JOINTS.

CONSTRUCTION JOINT KEY DETAIL
NOT TO SCALE

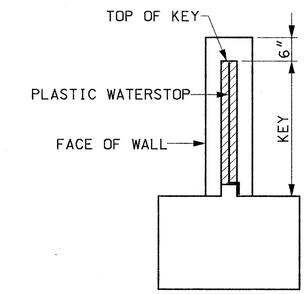

TYPICAL WALL SECTION AT JOINT
NOT TO SCALE

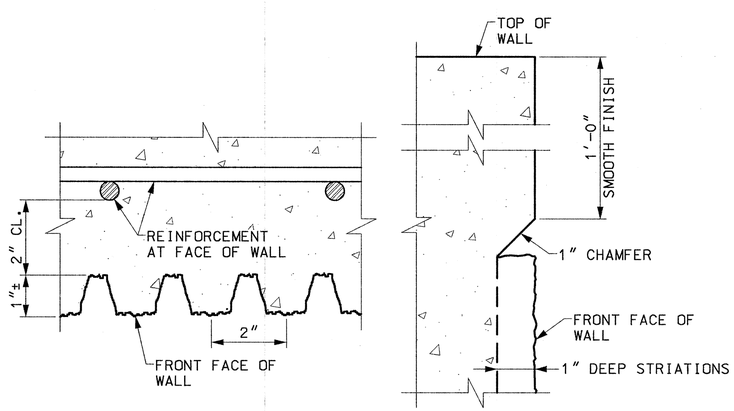

TYPICAL STRIATION DETAIL
NOT TO SCALE

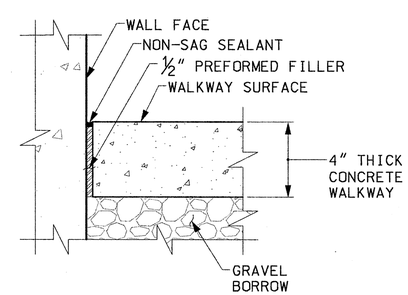

TYPICAL WALKWAY JOINT AT WALL
NOT TO SCALE

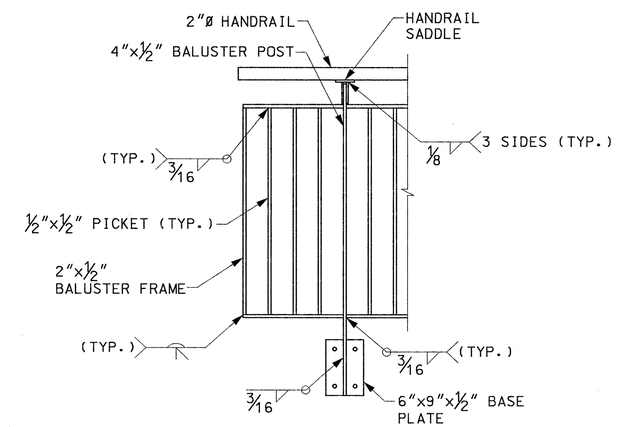

TYPICAL GUARDRAIL WELD DETAILS
SCALE: 1" = 1'-0"

COMMONWEALTH OF MASSACHUSETTS
GREGORY T. STEFANO
STRUCTURAL
No. 36725
REGISTERED PROFESSIONAL ENGINEER
5/18/2012

MASSACHUSETTS BAY TRANSPORTATION AUTHORITY

FITCHBURG COMMUTER RAIL LINE
IMPROVEMENT PROJECT
CONTRACT NO. G67CN01

SOUTH ACTON STATION
GENERAL STRUCTURAL DETAILS

ISSUE	DATE	DESCRIPTION	BY	CHKD.	APP.

HNTB
300 APOLLO DRIVE
CHELMSFORD, MA 01824
(978) 905-4000
PROJECT MANAGER — Date 5/30/12

MASSACHUSETTS BAY TRANSPORTATION AUTHORITY
APPROVED BY:
PROJECT MANAGER — Date 6/30/12

JACOBS
343 CONGRESS STREET
BOSTON, MA 02110
(617) 242-9222

HORIZ: N/A	DES. BY	DR. BY	CHK. BY	PLAN NO. 168695	ISSUE
VERT: N/A	JAG	JAG	MWT		
DATE: 5/17/12				SHEET S-155	

FILE NAME: P:\MBTA\2008\E2X37800\CAD\700CADD\702STATIONS\South Acton\Structural\PS&E Submission\ 155_Gen_Dets.dwg
PLOT DATE: May 18, 2012 – 8:24am

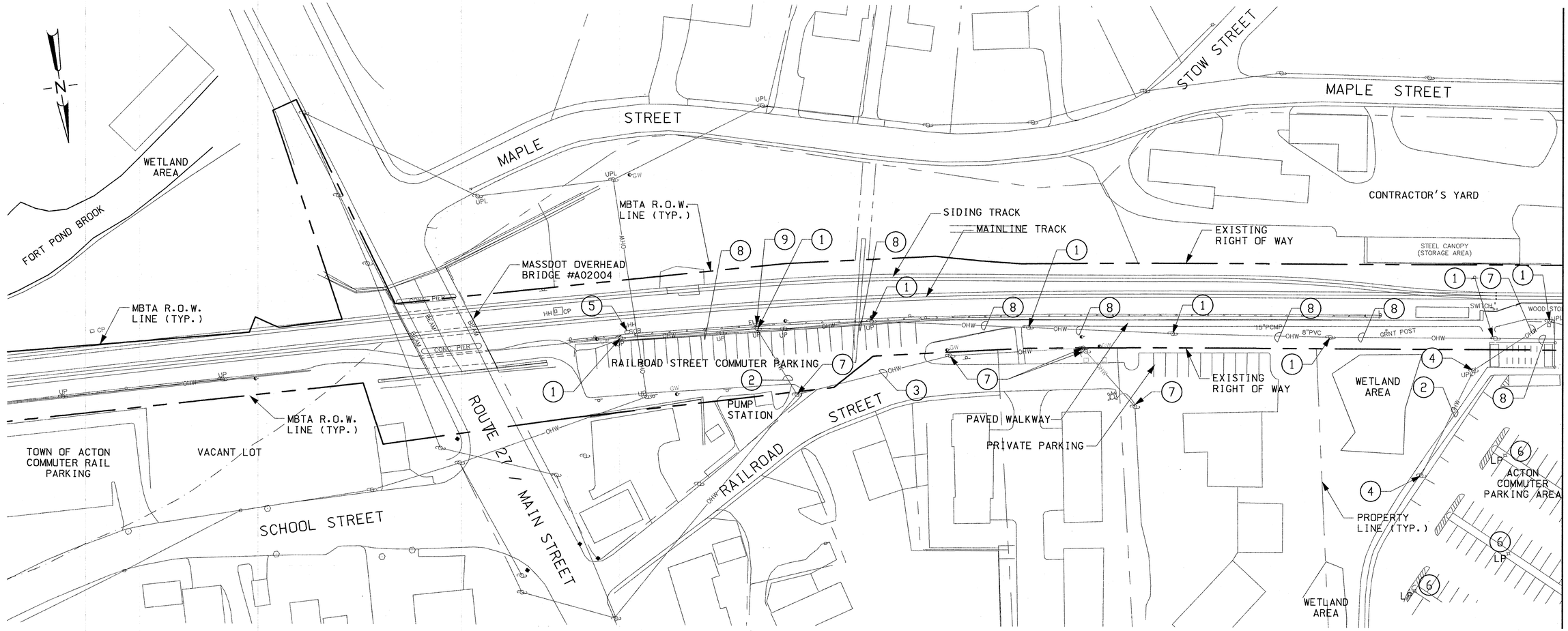

PLAN

ELECTRICAL DEMOLITION NOTES:
(APPLIES TO SHEETS ES-1 AND ES-2 ONLY)

1. SIGNAL POLE (DISCONNECT & REMOVE). COORDINATE TASK WITH MBTA SIGNAL DEPARTMENT.
2. AERIAL POWER FEED (DISCONNECT & REMOVE). COORDINATE WITH NSTAR.
3. AERIAL POWER FEED TO REMAIN.
4. LIGHTING POLE (DISCONNECT & REMOVE). COORDINATE WITH NSTAR.
5. SIGNAL/TELECOMM EQUIPMENT – SHALL BE REMOVED BY MBCR SIGNAL GROUP.
6. LIGHTING POLE TO REMAIN
7. POWER POLE TO REMAIN
8. AERIAL WIRE (DISCONNECT & REMOVE)
9. SIGNAL/POWER ENCLOSURE – SHALL BE REMOVED BY MBCR SIGNAL GROUP.

HORIZ. 40 0 40 80
(SCALE IN FEET)

COMMONWEALTH OF MASSACHUSETTS
RAYMOND J. WALSH JR.
ELECTRICAL
No. 45241
REGISTERED PROFESSIONAL ENGINEER

MASSACHUSETTS BAY TRANSPORTATION AUTHORITY

FITCHBURG COMMUTER RAIL LINE
IMPROVEMENT PROJECT
CONTRACT NO. G67CN01

SOUTH ACTON STATION
ELECTRICAL (EXISTING) CONDITIONS PLAN
SHEET 1 OF 2

ISSUE	DATE	DESCRIPTION	BY	CHKD.	APP.

HNTB 300 APOLLO DRIVE CHELMSFORD, MA 01824 (978) 905-4000
PROJECT MANAGER 5/30/12 Date

MASSACHUSETTS BAY TRANSPORTATION AUTHORITY
APPROVED BY: PROJECT MANAGER 6/30/12 Date

JACOBS 343 CONGRESS STREET BOSTON, MA 02110 (617) 242-9222

	DES. BY	DR. BY	CHK. BY
HORIZ: AS SHOWN	RW	JPH	WTG
VERT: NONE			
DATE: 5/17/12			

PLAN NO. 168700
SHEET ES-1
ISSUE

FILE NAME: P:\MBTA\2008\E2X37800\CAD\700CADD\702STATIONS\South Acton\Electrical\100%\ ES1 & ES2 Existing Conditions Plans.dwg
PLOT DATE: May 17, 2012 – 12:43pm

EAST TO BOSTON

WEST TO FITCHBURG
TOWN OF ACTON

MATCH LINE SEE SHEET ES-1

MAPLE STREET

TO MARTIN STREET

WETLAND AREA

EXISTING RIGHT OF WAY

GARAGE

LOW LEVEL STATION PLATFORM

BUS SHELTER

MBTA RIGHT OF WAY

STATION DROP OFF AREA

ACTON COMMUTER PARKING AREA

WETLAND AREA

WETLAND AREA

PROPERTY LINE (TYP.)

MARTIN STREET

PLAN

NOTE: FOR LEGEND INFO SEE SHEET ES-1.

APPROXIMATE LOCATION OF LIGHTING CONTROL BOX (ADJACENT ENTRANCE DRIVEWAY). CONTROL BOX TO REMAIN.

HORIZ. 40 0 40 80
(SCALE IN FEET)

COMMONWEALTH OF MASSACHUSETTS
RAYMOND J. WALSH JR.
ELECTRICAL
No. 45241
REGISTERED PROFESSIONAL ENGINEER

MASSACHUSETTS BAY TRANSPORTATION AUTHORITY

FITCHBURG COMMUTER RAIL LINE
IMPROVEMENT PROJECT
CONTRACT NO. G67CN01

SOUTH ACTON STATION
ELECTRICAL (EXISTING) CONDITIONS PLAN
SHEET 2 OF 2

ISSUE	DATE	DESCRIPTION	BY	CHKD.	APP.

HNTB
300 APOLLO DRIVE
CHELMSFORD, MA 01824
(978) 905-4000

PROJECT MANAGER — Date 5/30/12

MASSACHUSETTS BAY TRANSPORTATION AUTHORITY
APPROVED BY:
PROJECT MANAGER — Date 6/30/12

JACOBS
343 CONGRESS STREET
BOSTON, MA 02110
(617) 242-9222

HORIZ: AS SHOWN	DES. BY	DR. BY	CHK. BY	PLAN NO. 168701	ISSUE
VERT: NONE	RW	JPH	WTG		
DATE: 5/17/12				SHEET ES-2	

FILE NAME: P:\MBTA\2008\E2X37800\CAD\700CADD\702STATIONS\South Acton\Electrical\100%\ ES1 & ES2 Existing Conditions Plans.dwg
PLOT DATE: May 17, 2012 – 12:44pm

NOTES:

1. 2W-4" CONCRETE ENCASED PRIMARY POWER DUCTBANK, DISTRIBUTION AS FOLLOWS:
   CONDUIT 1: THREE PHASE NSTAR PRIMARY FEEDER
   CONDUIT 2: SPARE
2. 2W-4" CONCRETE ENCASED SECONDARY POWER DUCTBANK, DISTRIBUTION AS FOLLOWS:
   CONDUIT 1: 4#600KCMIL (600V INSL) & 1#3AWG GW
   CONDUIT 2: SPARE
3. FOR ELECTRICAL WORK IN 1ST FLOOR (OUTBOUND) AREA SEE SHEETS E-3, E-7.
4. FOR ELECTRICAL WORK IN 2ND FLOOR (OUTBOUND) AREA SEE SHEETS E-5, E-9.
5. FOR ELECTRICAL WORK IN 1ST FLOOR (INBOUND) AREA SEE SHEETS E-4, E-8.
6. FOR ELECTRICAL WORK IN 2ND FLOOR (INBOUND) AREA SEE SHEETS E-6, E-10.
7. SEE SHEET E-11 FOR OUTBOUND (EAST) CANOPY LIGHTING INFO
8. SEE SHEET E-12 FOR INBOUND (EAST) CANOPY LIGHTING INFO
9. SEE SHEET E-13 FOR CONTINUATION/WIRING/CONDUIT INFO LIGHTING
10. SEE SHEET E-14 FOR CONTINUATION/WIRING/CONDUIT INFO
11. UNDER PLATFORM PULLBOX (TYP) SEE SHEET E-14 FOR WIRING INFO
12. UNDER PLATFORM PULLBOX (TYP) SEE SHEET E-13 FOR WIRING INFO
13. LV COMM 3W-3" CONCRETE ENCASED PVC DUCTBANK
    STUB UP INSIDE MBTA COMM ROOM
14. 10W-2" CONCRETE ENCASED PVC DUCTBANK, DISTRIBUTION AS FOLLOWS:
    CONDUIT #1: 5X(2#8AWG XHHW & 1#12G) OUTBOUND LIGHTING - WEST
    CONDUIT #2: 5X(2#8AWG XHHW & 1#12G) OUTBOUND LIGHTING - EAST
    CONDUITS #3,4: SPARE - OUTBOUND PLATFORM
    CONDUIT #5: 3#4AWG XHHW & 1#8G) OUTBOUND ELEVATOR
    CONDUIT #6: 4#1 AWG XHHW & 1#6G) OUTBOUND MBTA COMM CLOSET POWER SERVICE
    CONDUIT #7: 5X(2#8AWG XHHW & 1#12G) INBOUND LIGHTING - WEST
    1X(2#8 AWG XHHW & 1#12G) MOW CIRCUIT -TERMINATE AT PANEL DP1
    CONDUIT #8: 7X(2#8AWG XHHW & 1#12G) INBOUND LIGHTING - EAST
    CONDUIT #9: 3#1AWG XHHW & 1#6G - COMM CABIN SERVICE EAST END OF INBOUND PLATFORM
    CONDUIT #10: SPARE - INBOUND PLATFORM
15. 6W-2" CONCRETE ENCASED RGS DUCTBANK, DISTRIBUTION AS FOLLOWS:
    (CONDUITS 1-4: STUB UP AT PB ADJ POLE P19)
    CONDUIT #1: 5X(2#8AWG XHHW & 1#12G) OUTBOUND LIGHTING - WEST
    CONDUIT #2: 6X(2#8AWG XHHW & 1#12G) OUTBOUND LIGHTING - EAST
    CONDUIT #3,4: SPARE - OUTBOUND PLATFORM
    CONDUIT #5: (3#4AWG XHHW & 1#8G) OUTBOUND ELEVATOR - STUB UP AT ELEVATOR MACHINE ROOM
    CONDUIT #6: (4#1AWG XHHW & 1#6G) OUTBOUND MBTA COMM CLOSET POWER SERVICE - STUB UP AT COMM CLOSET
    2#8 & 1#12G - INBOUND PLATFORM CAMERA
16. 4W-3" CONCRETE ENCASED RGS DUCTBANK, DISTRIBUTION AS FOLLOWS:
    CONDUIT #1: MBTA/TOWN OF ACTON COMM USE
    CONDUIT #2: MBTA/TOWN OF ACTON COMM USE
    CONDUIT #3: MBTA/TOWN OF ACTON COMM USE
    CONDUIT #4: FIRE ALARM SYSTEM COMM USE
17. 2-2" CONCRETE ENCASED RGS CONDUITS, DISTRIBUTION AS FOLLOWS:
    CONDUIT 1: 3#4 & 1#8G OUTBOUND ELEVATOR SERVICE - STUB UP AT ELEVATOR MACHINE ROOM
    CONDUIT 2: 4#1 & 1#6G MBTA COMM. CLOSET LOAD CENTER - STUB UP AT COMM CLOSET
    SEE SHEET E-13 FOR INFO
    2#8 & 1#12G - INBOUND PLATFORM CAMERA
18. 2" RGS CONDUIT WITH 3X(2#8 XHHW & 1#12G) & 1X(2#8 XHHW & 1#12G) MOW CIRCUIT
19. 3/4" RGS CONDUIT WITH 2#8 XHHW & 1#12G
20. NEW SERVICE POLE PROVIDED BY NSTAR
21. THREE PHASE PRIMARY AERIAL LINE PROVIDED BY NSTAR
22. 4W-4" PVC SIGNAL DUCTBANK (ROUTED UNDER PLATFORM) MIN 36" BFG
23. 4W-4" RGS CONCRETE ENCASED DUCTBANK (SIGNAL TYPE) ROUTED UNDER TRACKS
24. 4W-4" PVC DUCTBANK WITH CONCRETE ENCASEMENT
25. 2W-4" PVC DUCTBANK CONCRETE ENCASED (CITY OF SOUTH ACTON TELECOMM DEPARTMENT)
26. 4W-2" CONCRETE ENCASED RGS DUCTBANK, DISTRIBUTION AS FOLLOWS:
    CONDUIT #1: 6X(2#8AWG XHHW & 1#12G)
    CONDUIT #2: 5X(2#8AWG XHHW & 1#12G)
    CONDUIT #3: 3#1AWG XHHW & 1#6G
    CONDUIT #4: SPARE
27. 4-CONDUITS (RGS) - CONCRETE ENCASED FROM COMM SHELTER LOAD CENTER, INFO AS FOLLOWS:
    2"C WITH 3#1AWG XHHW & 1#6G
    2"C WITH 2X(2#8AWG XHHW & 1#12G - VMS POWER)
    1"C SPARE
    1"C SPARE
28. 4W-2" RGS CONDUITS - CONCRETE ENCASED
    STUB UP INSIDE COMM SHELTER (3" AFF)
    ROUTE TO CHH#4 AS SHOWN
29. 2W-2" RGS (CONCRETE ENCASED) DISTRIBUTION AS FOLLOWS:
    CONDUIT#1: 2#8AWG XHHW & 1#12G - VMS POWER
    CONDUIT#2: SPARE
30. 2W-2" RGS (CONCRETE ENCASED) - LV/CONTROL/COMM USE
31. 2W-2" RGS (CONCRETE ENCASED) COMM USE
    STUB UP INSIDE ELEVATOR MACHINE ROOM (INBOUND)
32. 2W-2" RGS (CONCRETE ENCASED) COMM USE
    STUB UP AT CONTROL PULL BOX CP1
33. COLUMN MOUNTED VMS SIGN - SEE SHEET E-16 FOR ELEVATION INFO & SHEETS E-13 & E-14 FOR WIRING INFO
34. 3/4" RGS WITH 2#8AWG XHHW & 1#12G - INBOUND CAMERA POWER - ROUTE TO CAMERA POWER JB @ INBOUND VESTIBULE AREA
35. FIRE ALARM SYSTEM (3" PVC) COMM CONDUIT. STUB UP IN TOWN COMM ROOM 3" AFF
36. FIRE ALARM SYSTEM (3" PVC) COMM CONDUIT. STUB UP IN MAIN ELECTRICAL ROOM ADJACENT TO FACP, 3" AFF
37. 3/4" RGS CONDUIT WITH 2#8AWG XHHW & 1#12G - MAINTENANCE OF WAY CIRCUIT. TERMINATE INSIDE MOW BOX, STUB UP 3"AFF AND LEAVE MINIMUM (10FT) SLACK LOOP FOR TERMINATION.

LEGEND:

P2	LIGHT POLE
C2	CANOPY LIGHT FIXTURE
R2	RAMP LIGHT FIXTURE
W2	WALL PACK LIGHT FIXTURE
EHH	ELECTRIC HANDHOLE
EMH	ELECTRIC MANHOLE
PB	PULLBOX
CP	CONTROL PULLBOX
CHH	COMMUNICATIONS HANDHOLE
	UTILITY POLE
T	TRANSFORMER
SMH	SIGNAL MANHOLE
- - - - - -	UNDERGROUND CONDUIT (EITHER SCH. 80 PVC OR "RGS" RIGID GALVANIZED STEEL CONDUIT)
J CP	4"X4" NEMA 3R CAMERA JB (POWER) INBOUND SIDE - PROVIDE 3/4" RGS & 2#12AWG XHHW & 1#12G TO PANEL DP1 OUTBOUND SIDE - PROVIDE 3/4" RGS & 2#8AWG XHHW & 1#12G
J CC	4"X4" NEMA 3R CAMERA JB (CONTROL) INBOUND SIDE - PROVIDE 3/4" RGS & ROUTE TO PULLBOX CP1 OUTBOUND SIDE - PROVIDE 3/4" RGS AND ROUTE TO MBTA COMM ROOM - STUB OUT 3" INSIDE COMM ROOM

FIRE ALARM SYSTEM LEGEND:

F	FIRE ALARM MANUAL PULL STATION
H R	FIRE ALARM SYSTEM HEAT DETECTOR, COLD WEATHER RATED. "R" DENOTES ELEVATOR RETURN
RI	FIRE ALARM SYSTEM REMOTE INDICATOR UNIT
F	FIRE ALARM SYSTEM AUDIBLE/VISUAL DEVICE

ABBREVIATIONS:

A	AMPERES
AFF	ABOVE FINISH FLOOR
AWG	AMERICAN WIRE GAUGE
BLDG	BUILDING
C	CONDUIT - RACEWAY
CAT	CATALOG
CKT	CIRCUIT
CL	CENTERLINE
COMM	COMMUNICATIONS/LOW VOLTAGE
CU	COPPER
CB	CIRCUIT BREAKER
DWG	DRAWING
FA	FIRE ALARM
FAA	FIRE ALARM ANNUNCIATOR
FACP	FIRE ALARM CONTROL PANEL
FT	FOOT
G	GROUND OR GROUNDING
GC	GENERAL CONTRACTOR
HP	HORSEPOWER
KVA	KILOVOLT AMPERES
KW	KILOWATTS
MCB	MAIN CIRCUIT BREAKER
MISC	MISCELLANEOUS
MLO	MAIN LUGS ONLY
MOW	MAINTENANCE OF WAY
NEC	NATIONAL ELECTRIC CODE
NEMA	NATIONAL ELECTRICAL MANUFACTURER ASSOCIATION
NTS	NOT TO SCALE
PNL	PANEL OR PANELBOARD
PVC	POLYVINYL CHLORIDE
PWR	POWER
RGS	RIGID GALVANIZED STEEL CONDUIT
TEL	TELEPHONE
UG	UNDERGROUND
V	VOLT
W	WIRE
WP	WEATHERPROOF

20 0 20 40
SCALE IN FEET

COMMONWEALTH OF MASSACHUSETTS
RAYMOND J. WALSH JR.
ELECTRICAL
No. 45241
REGISTERED PROFESSIONAL ENGINEER

ISSUE	DATE	DESCRIPTION	BY	CHKD.	APP.

JACOBS 343 CONGRESS STREET BOSTON, MA 02110 (617) 242-9222

MASSACHUSETTS BAY TRANSPORTATION AUTHORITY

FITCHBURG COMMUTER RAIL LINE IMPROVEMENT PROJECT CONTRACT NO. G67CN01

SOUTH ACTON STATION NOTES & LEGEND

HNTB 300 APOLLO DRIVE CHELMSFORD, MA 01824 (978) 905-4000

PROJECT MANAGER Date 5/30/12

MASSACHUSETTS BAY TRANSPORTATION AUTHORITY
APPROVED BY: PROJECT MANAGER Date 6/30/12

HORIZ: AS SHOWN	DES. BY	DR. BY	CHK. BY	PLAN NO. 168702	ISSUE
VERT: NONE	RJW	JPH	WTG		
DATE: 5/17/12				SHEET E-0	

FILE NAME: P:\MBTA\2008\F2X37800\CAD\700CADD\702STATIONS\South Acton\Electrical\100%\ E0 Electrical Legend.dwg
PLOT DATE: May 22, 2012 - 5:58pm

EAST TO BOSTON

WEST TO FITCHBURG

TOWN OF ACTON

N

MAPLE STREET

MAIN STREET

RAILROAD STREET

NEW POLE (20)

EXISTING (TO REMAIN), 3 PHASE SERVICE POLE

DROP OFF AREA

MAINT. OF WAY BOX.

COMM. SHED

SIGNAL HOUSE

4-4" CONDUIT STUB UP INSIDE SIGNAL SHELTER

PROPOSED ℄ TRACK 2

PROPOSED ℄ TRACK 1

TRACK-SIDE FENCING

20 NEW RISER POLE

NSTAR PAD MOUNT TRANSFORMER

RAMP

(7) (PLATFORM CANOPY)

(8) (PLATFORM CANOPY)

GUARD RAIL

TO SMH3

MATCH LINE STA. 1334+00 SEE SHEET E-2

PLAN – EAST END

20 0 20 40

SCALE IN FEET

ISSUE	DATE	DESCRIPTION	BY	CHKD.	APP.

JACOBS 343 CONGRESS STREET BOSTON, MA 02110 (617) 242-9222

HNTB 300 APOLLO DRIVE CHELMSFORD, MA 01824 (978) 905-4000

PROJECT MANAGER 5/30/12 Date

MASSACHUSETTS BAY TRANSPORTATION AUTHORITY

APPROVED BY: PROJECT MANAGER 6/30/12 Date

HORIZ: AS SHOWN

VERT: NONE

DATE: 5/17/12

DES. BY	DR. BY	CHK. BY
RJW	JPH	WTG

PLAN NO. 168703

SHEET E-1

ISSUE

COMMONWEALTH OF MASSACHUSETTS RAYMOND J. WALSH JR. ELECTRICAL No. 45241 REGISTERED PROFESSIONAL ENGINEER

MASSACHUSETTS BAY TRANSPORTATION AUTHORITY

FITCHBURG COMMUTER RAIL LINE IMPROVEMENT PROJECT CONTRACT NO. G67CN01

SOUTH ACTON STATION ELECTRICAL SITE PLAN – EAST END SHEET 1 OF 2

FILE NAME: P:\MBTA\2008\E2X37800\CAD\700CADD\702STATIONS\South Acton\Electrical\100%\ E1 & E2 Electrical Site Plans.dwg

PLOT DATE: May 22, 2012 – 5:53pm

EAST TO BOSTON

WEST TO FITCHBURG

TOWN OF ACTON

MATCH LINE STA. 1334+00 SEE SHEET E1

N

STAIRWAY AND ELEVATOR TO OVERHEAD PEDESTRIAN BRIDGE

PROPOSED ℄ TRACK 2

PROPOSED ℄ TRACK 1

EXTERIOR MAIN SERVICE SWITCH AND METER

TO ELECTRICAL ROOM

SMH3 UNDER PLATFORM

PB P35 CP2 PB P34 PB P33 PB P32 PB P31 PB P30 PB P29 PB P28 PB2 PB1 P27 CP1 PB P26 PB P25 PB P24 PB P23

CHH2 EMH1

SMH4

TO SMH2

4W-4" DUCT.

TO SMH4

800' LONG, HIGH LEVEL SIDE PLATFORMS

ELECTRICAL ROOM

PB P11 CP6 PB P12 PB P13 PB P14 PB P15 PB P16 PB P17 PB P18 PB7 CP5 PB8 PB P19 PB P20 PB P21 PB P22

SMH5

TO SMH6

SMH6 UNDER PLATFORM

TO SMH5

MBTA COMM. ROOM

CHH1 (UNDER PLATFORM)

MBTA MOW BOX

ELEVATOR TO PEDESTRIAN BRIDGE

TOWN COMM ROOM

EXISTING COMM. MANHOLE

MAIN STATION ENTRANCE

STAIRS TO PLATFORM AND PEDESTRIAN BRIDGE

PLAN – WEST END

20 0 20 40

SCALE IN FEET

ISSUE	DATE	DESCRIPTION	BY	CHKD.	APP.

COMMONWEALTH OF MASSACHUSETTS
RAYMOND J. WALSH JR.
ELECTRICAL No. 45241
REGISTERED PROFESSIONAL ENGINEER

MASSACHUSETTS BAY TRANSPORTATION AUTHORITY

FITCHBURG COMMUTER RAIL LINE
IMPROVEMENT PROJECT
CONTRACT NO. G67CN01

SOUTH ACTON STATION
ELECTRICAL SITE PLAN – WEST END
SHEET 2 OF 2

HNTB 300 APOLLO DRIVE CHELMSFORD, MA 01824 (978) 905-4000

PROJECT MANAGER Date

MASSACHUSETTS BAY TRANSPORTATION AUTHORITY

APPROVED BY: PROJECT MANAGER Date 6/30/12

JACOBS 343 CONGRESS STREET BOSTON, MA 02110 (617) 242-9222

HORIZ: AS SHOWN	DES. BY	DR. BY	CHK. BY	PLAN NO. 168704	ISSUE
VERT: NONE	RJW	JPH	WTG		
DATE: 5/17/12				SHEET E-2	

FILE NAME: P:\MBTA\2008\E2X37800\CAD\700CADD\702STATIONS\South Acton\Electrical\100%\ E1 & E2 Electrical Site Plans.dwg
PLOT DATE: May 22, 2012 – 5:56pm

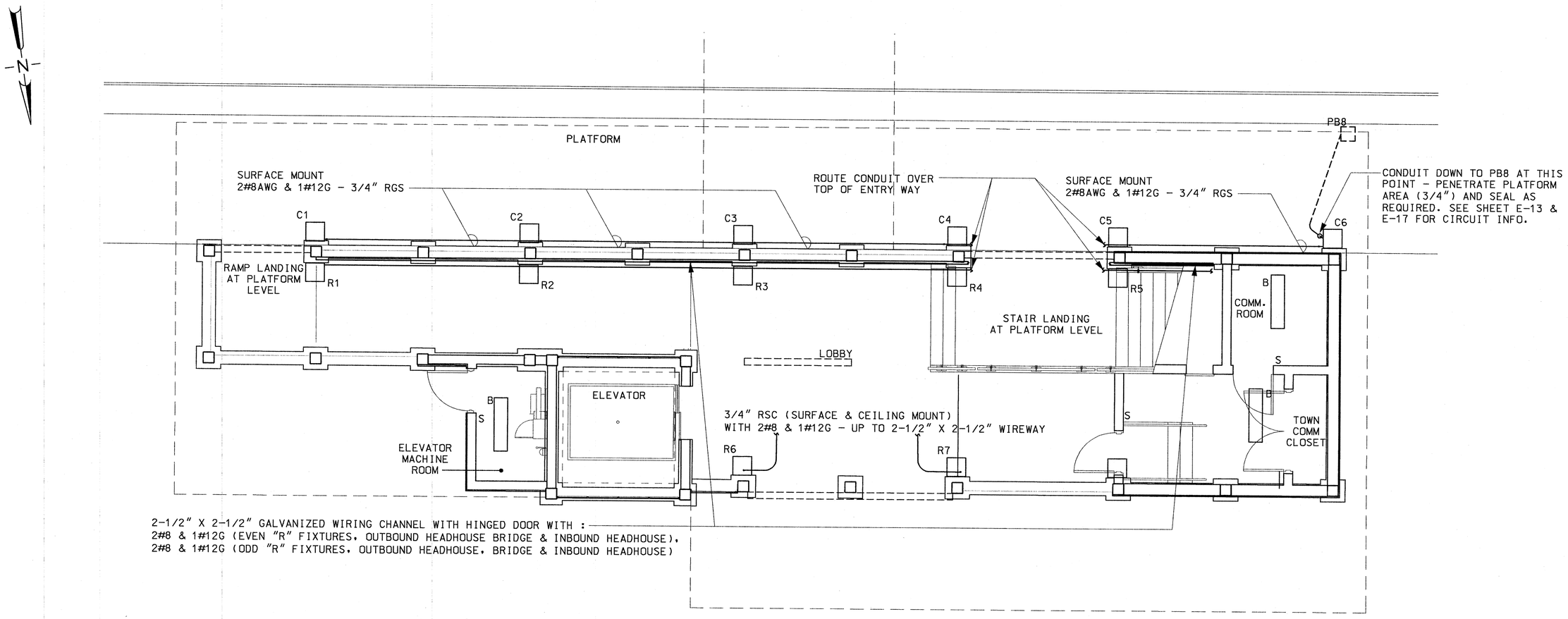

PLAN

0 2 4 8

SCALE: 1/4" = 1'-0"

COMMONWEALTH OF MASSACHUSETTS
RAYMOND J. WALSH JR.
ELECTRICAL
No. 45241
REGISTERED
PROFESSIONAL ENGINEER

MASSACHUSETTS BAY TRANSPORTATION AUTHORITY

FITCHBURG COMMUTER RAIL LINE
IMPROVEMENT PROJECT
CONTRACT NO. G67CN01

SOUTH ACTON STATION
FIRST FLOOR – OUTBOUND HEAD HOUSE LIGHTING PLAN

ISSUE	DATE	DESCRIPTION	BY	CHKD.	APP.

HNTB
300 APOLLO DRIVE
CHELMSFORD, MA 01824
(978) 905-4000

PROJECT MANAGER — Date 5/30/12

MASSACHUSETTS BAY TRANSPORTATION AUTHORITY
APPROVED BY:
PROJECT MANAGER — Date 6/30/12

JACOBS
343 CONGRESS STREET
BOSTON, MA 02110
(617) 242-9222

HORIZ: AS SHOWN	DES. BY	DR. BY	CHK. BY
VERT: NONE	RJW	JPH	WTG
DATE: 5/17/12			

PLAN NO. 168705

SHEET E-3

ISSUE

FILE NAME: P:\MBTA\2008\E2X37800\CAD\700CADD\702STATIONS\South Acton\Electrical\100%\ E3-E6 Head House Lighting Plans.dwg
PLOT DATE: May 17, 2012 – 12:22pm

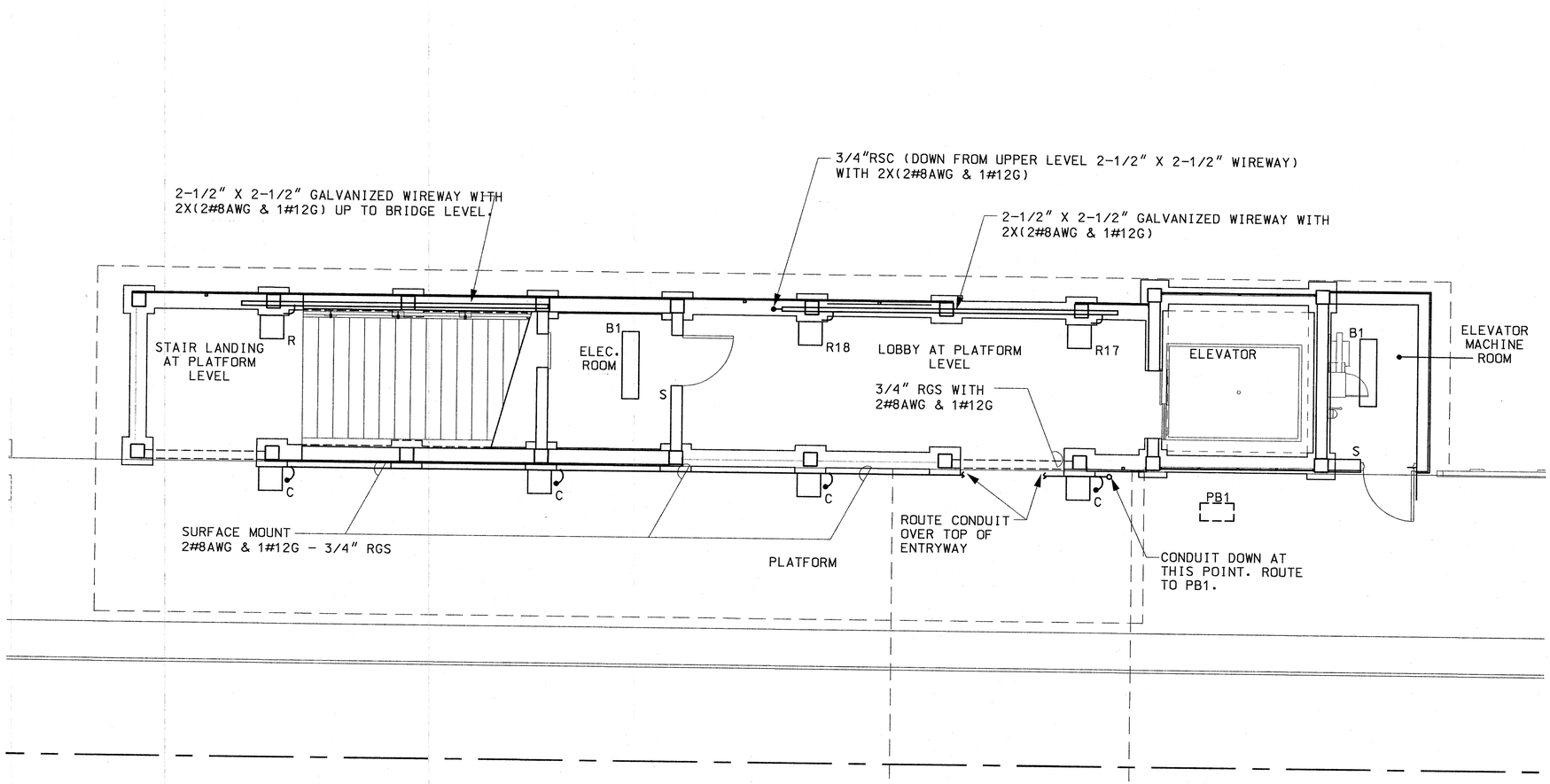

PLAN

0 2 4 8

SCALE: 1/4" = 1'-0"

FILE NAME: P:\MBTA\2008\E2X37800\CAD\700CADD\702STATIONS\South Acton\Electrical\100%\ E3-E6 Head House Lighting Plans.dwg
PLOT DATE: May 17, 2012 - 12:24pm

COMMONWEALTH OF MASSACHUSETTS
RAYMOND J. WALSH JR.
ELECTRICAL
No. 45241
REGISTERED PROFESSIONAL ENGINEER

ISSUE	DATE	DESCRIPTION	BY	CHKD.	APP.

MASSACHUSETTS BAY TRANSPORTATION AUTHORITY

FITCHBURG COMMUTER RAIL LINE
IMPROVEMENT PROJECT
CONTRACT NO. G67CN01

SOUTH ACTON STATION
FIRST FLOOR – INBOUND HEAD HOUSE LIGHTING PLAN

HNTB
300 APOLLO DRIVE
CHELMSFORD, MA 01824
(978) 905-4000

PROJECT MANAGER — Date 5/30/12

MASSACHUSETTS BAY TRANSPORTATION AUTHORITY
APPROVED BY:
PROJECT MANAGER — Date 6/30/12

JACOBS
343 CONGRESS STREET
BOSTON, MA 02210
(617) 242-9222

HORIZ: AS SHOWN	DES. BY	DR. BY	CHK. BY	PLAN NO. 168706	ISSUE
VERT: NONE	RJW	JPH	WTG		
DATE: 5/17/12				SHEET E-4	

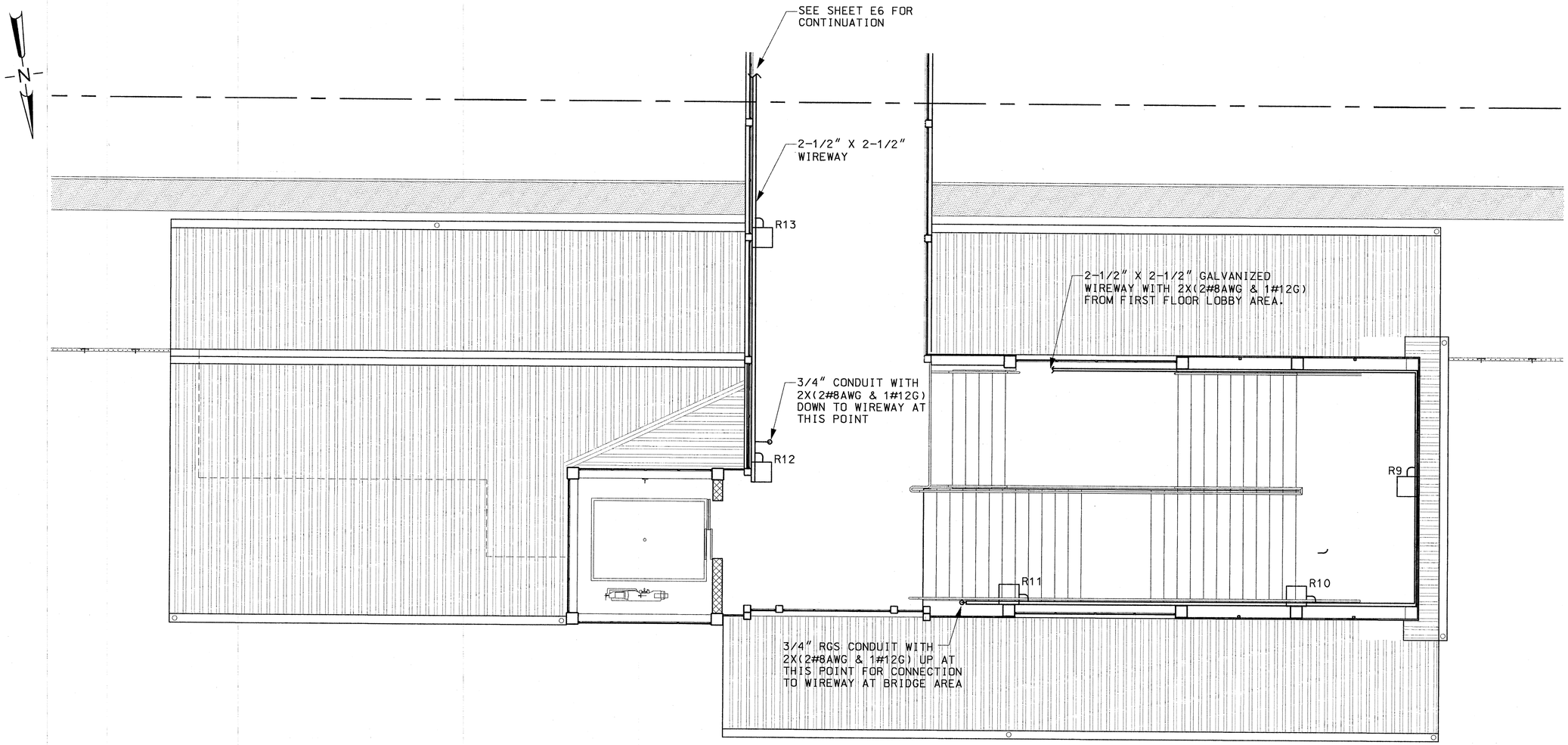

PLAN

0 2 4 8

SCALE: 1/4" = 1'-0"

FILE NAME: P:\MBTA\2008\E2X37800\CAD\700CADD\702STATIONS\South Acton\Electrical\100%\ E3-E6 Head House Lighting Plans.dwg
PLOT DATE: May 17, 2012 - 12:24pm

COMMONWEALTH OF MASSACHUSETTS
RAYMOND J. WALSH JR.
ELECTRICAL No. 45241
REGISTERED PROFESSIONAL ENGINEER

MASSACHUSETTS BAY TRANSPORTATION AUTHORITY

FITCHBURG COMMUTER RAIL LINE
IMPROVEMENT PROJECT
CONTRACT NO. G67CN01

SOUTH ACTON STATION
SECOND FLOOR-OUTBOUND HEAD HOUSE
LIGHTING PLAN

ISSUE	DATE	DESCRIPTION	BY	CHKD.	APP.

HNTB 300 APOLLO DRIVE CHELMSFORD, MA 01824 (978) 905-4000

PROJECT MANAGER 5/30/12 Date

MASSACHUSETTS BAY TRANSPORTATION AUTHORITY
APPROVED BY: PROJECT MANAGER 6/30/12 Date

JACOBS 343 CONGRESS STREET BOSTON, MA 02110 (617) 242-9222

HORIZ: AS SHOWN	DES. BY	DR. BY	CHK. BY	PLAN NO. 168707	ISSUE
VERT: NONE	RJW	JPH	WTG		
DATE: 5/17/12				SHEET E-5	

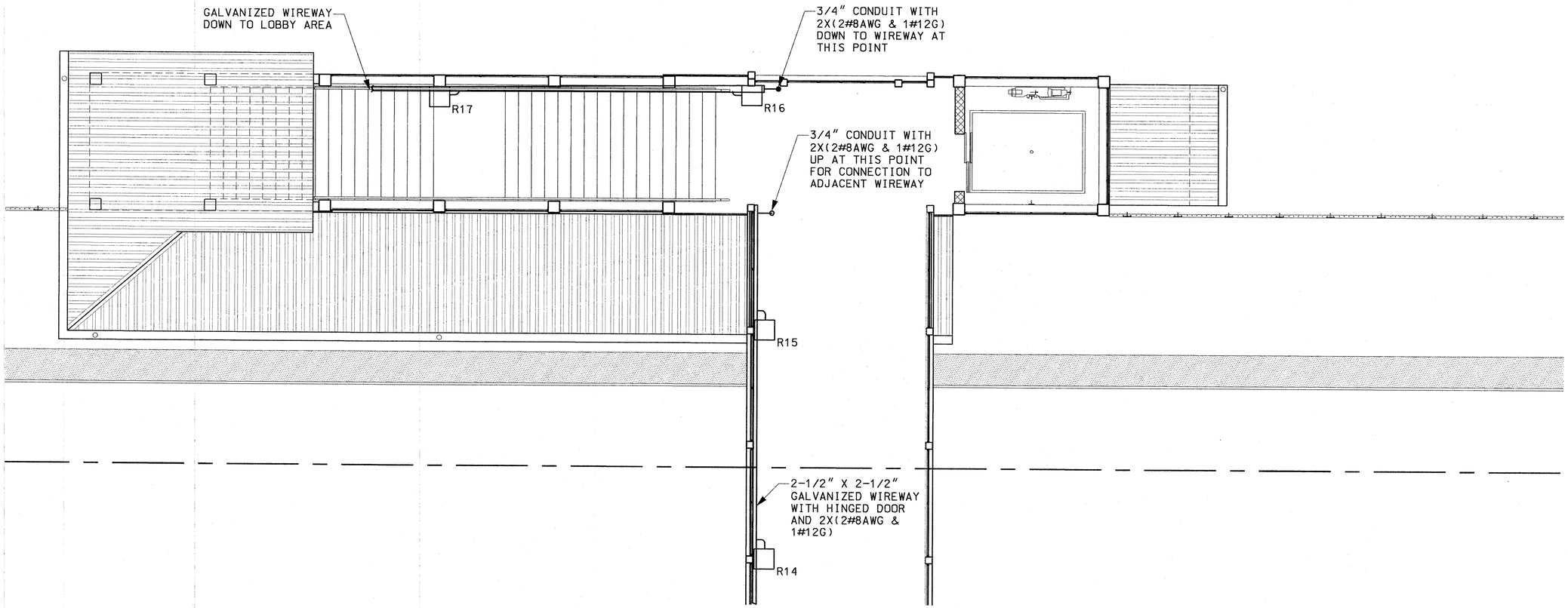

PLAN

0 2 4 8

SCALE: 1/4" = 1'-0"

COMMONWEALTH OF MASSACHUSETTS
RAYMOND J. WALSH JR.
ELECTRICAL
No. 45241
REGISTERED PROFESSIONAL ENGINEER

MASSACHUSETTS BAY TRANSPORTATION AUTHORITY

FITCHBURG COMMUTER RAIL LINE
IMPROVEMENT PROJECT
CONTRACT NO. G67CN01

SOUTH ACTON STATION
SECOND FLOOR – INBOUND HEAD HOUSE LIGHTING PLAN

ISSUE	DATE	DESCRIPTION	BY	CHKD.	APP.

HNTB
300 APOLLO DRIVE
CHELMSFORD, MA 01824
(978) 905-4000

PROJECT MANAGER 5/30/12 Date

MASSACHUSETTS BAY TRANSPORTATION AUTHORITY
APPROVED BY:
PROJECT MANAGER 6/30/12 Date

JACOBS
343 CONGRESS STREET
BOSTON, MA 02110
(617) 242-9222

HORIZ: AS SHOWN	DES. BY	DR. BY	CHK. BY	PLAN NO. 168708	ISSUE
VERT: NONE	RJW	JPH	WTG		
DATE: 5/17/12				SHEET E-6	

FILE NAME: P:\MBTA\2008\E2X37800\CAD\700CADD\702STATIONS\South Acton\Electrical\100%\ E3-E6 Head House Lighting Plans.dwg
PLOT DATE: May 17, 2012 – 12:25pm

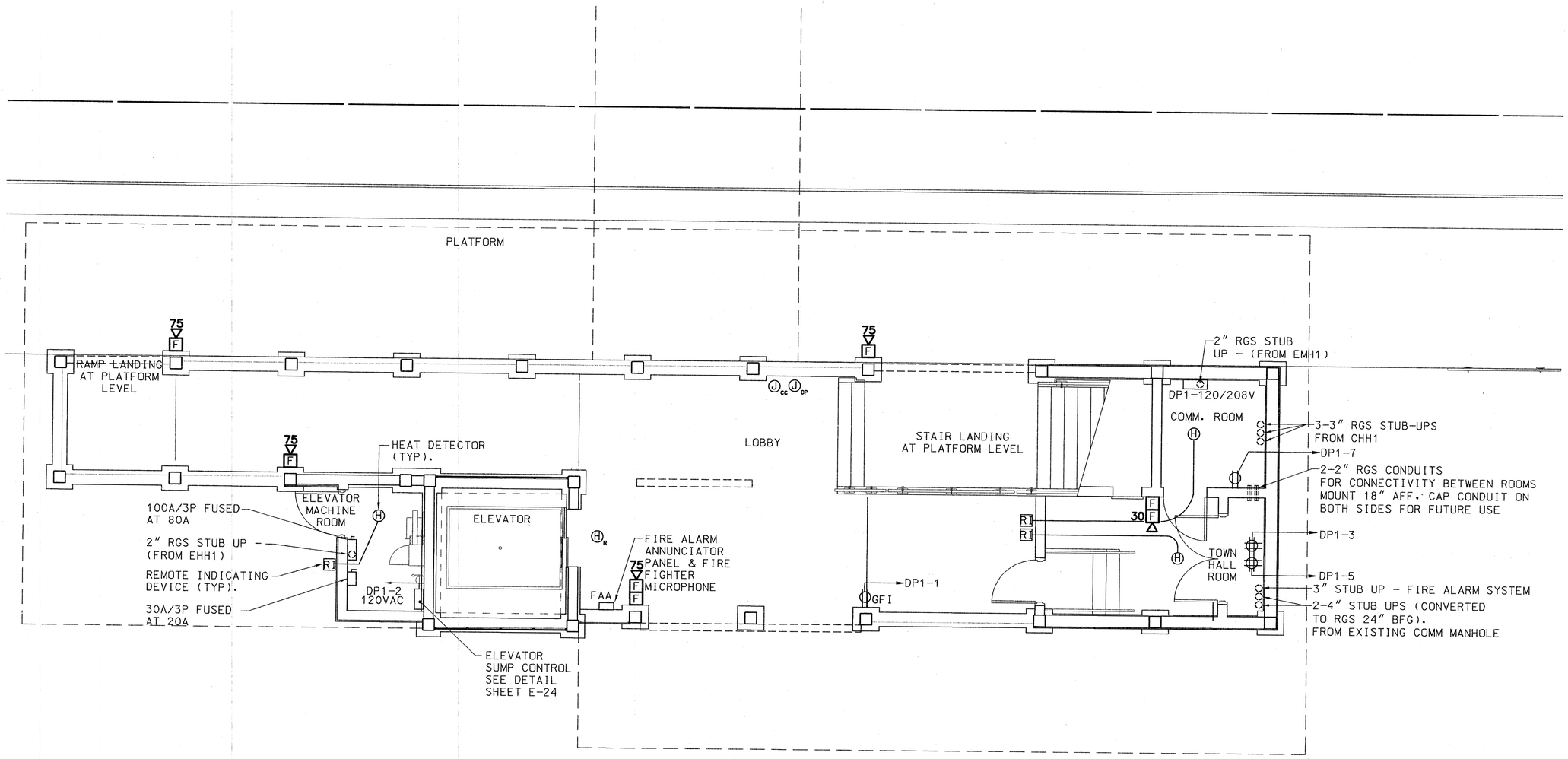

PLAN

0 2 4 8

SCALE: 1/4" = 1'-0"

NOTES:

1. ALL RECEPTACLES IN LOBBY AND BUILDING AREAS SHALL UTILIZE 2-1/2" X 2-1/2" WIREWAY AS MAIN RACEWAY PATH BACK TO ELECTRIC ROOM.
2. FOR INFO ON ELEVATOR WIRING SEE ONE LINE DIAGRAM.

COMMONWEALTH OF MASSACHUSETTS
RAYMOND J. WALSH JR.
ELECTRICAL
No. 45241
REGISTERED PROFESSIONAL ENGINEER

MASSACHUSETTS BAY TRANSPORTATION AUTHORITY

FITCHBURG COMMUTER RAIL LINE
IMPROVEMENT PROJECT
CONTRACT NO. G67CN01

SOUTH ACTON STATION FIRST FLOOR – OUTBOUND HEAD HOUSE POWER PLAN

ISSUE	DATE	DESCRIPTION	BY	CHKD.	APP.

HNTB
300 APOLLO DRIVE
CHELMSFORD, MA 01824
(978) 905-4000

PROJECT MANAGER 5/30/12 Date

MASSACHUSETTS BAY TRANSPORTATION AUTHORITY
APPROVED BY:
PROJECT MANAGER 6/30/12 Date

JACOBS
343 CONGRESS STREET
BOSTON, MA 02110
(617) 242-9222

HORIZ: AS SHOWN	DES. BY	DR. BY	CHK. BY	PLAN NO. 168709	ISSUE
VERT: NONE	RJW	JPH	WTG		
DATE: 5/17/12				SHEET E-7	

FILE NAME: P:\MBTA\2008\E2X37800\CAD\700CADD\702STATIONS\South Acton\Electrical\100%\ E7-E10 Head House Power Plans.dwg
PLOT DATE: May 22, 2012 – 8:32am

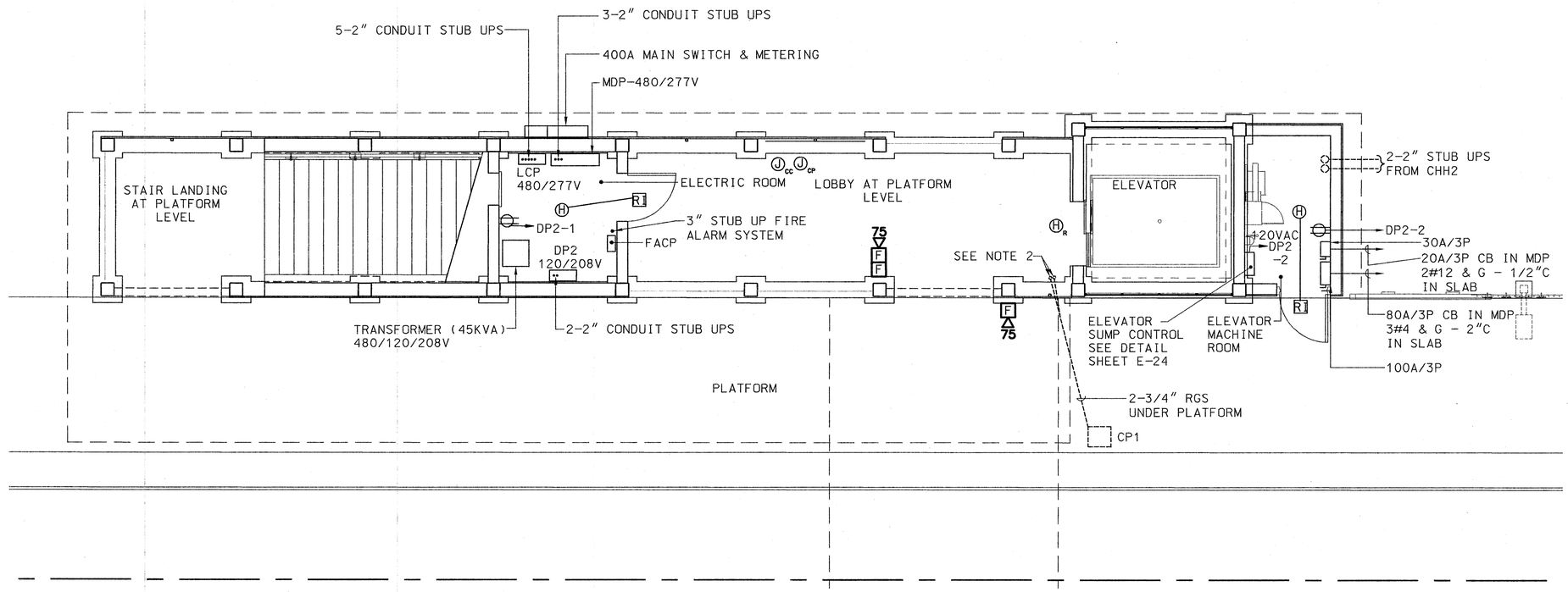

PLAN

0 2 4 8

SCALE: 1/4" = 1'-0"

NOTE:

1. FOR INFO ON ELEVATOR WIRING SEE ONE LINE DIAGRAM.
2. 2-3/4" RGS STUB UP 3"AFF IN THIS AREA TO SURFACE MOUNT 4"X4"X2" NEMA 1 JB.

COMMONWEALTH OF MASSACHUSETTS
RAYMOND J. WALSH JR.
ELECTRICAL
No. 45241
REGISTERED PROFESSIONAL ENGINEER

MASSACHUSETTS BAY TRANSPORTATION AUTHORITY

FITCHBURG COMMUTER RAIL LINE
IMPROVEMENT PROJECT
CONTRACT NO. G67CN01

SOUTH ACTON STATION
FIRST FLOOR – INBOUND HEAD HOUSE POWER PLAN

ISSUE	DATE	DESCRIPTION	BY	CHKD.	APP.

HNTB
300 APOLLO DRIVE
CHELMSFORD, MA 01824
(978) 905-4000

PROJECT MANAGER 5/30/12 Date

MASSACHUSETTS BAY TRANSPORTATION AUTHORITY
APPROVED BY
PROJECT MANAGER 6/30/12 Date

JACOBS
343 CONGRESS STREET
BOSTON, MA 02110
(617) 242-9222

HORIZ: AS SHOWN	DES. BY	DR. BY	CHK. BY	PLAN NO. 168710	ISSUE
VERT: NONE	RJW	JPH	WTG		
DATE: 5/17/12				SHEET E-8	

FILE NAME: P:\MBTA\2008\E2X3780\CAD\700CADD\702STATIONS\South Acton\Electrical\100%\ E7-E10 Head House Power Plans.dwg
PLOT DATE: May 22, 2012 – 8:31am

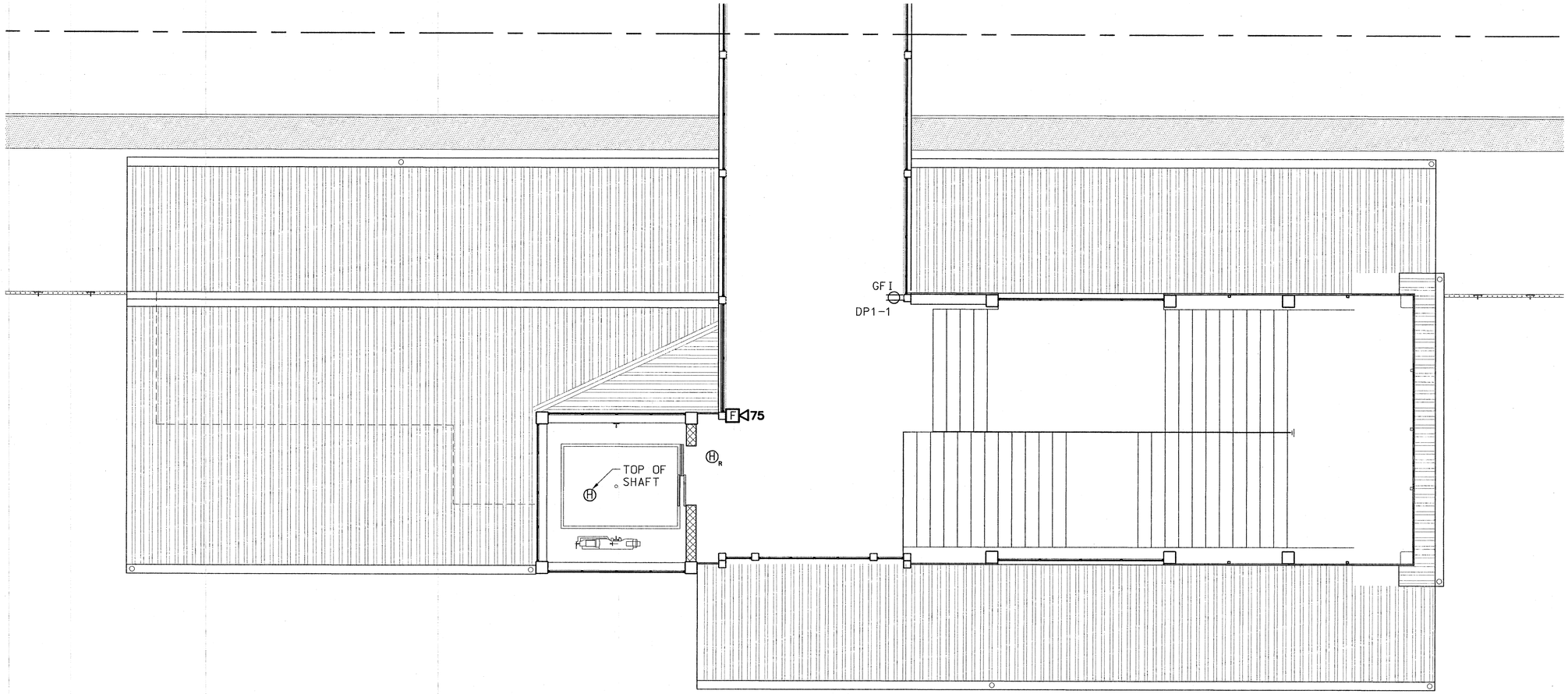

PLAN

0 2 4 8

SCALE: 1/4" = 1'-0"

NOTE:

1. ALL RECEPTACLE CIRCUITS SHALL UTILIZE 2-1/2" X 2-1/2" GALVANIZED WIREWAY AS RACEWAY PATH BACK TO ELECTRICAL ROOM.
2. SEE SHEETS E5 & E6 FOR WIREWAY LOCATION.

COMMONWEALTH OF MASSACHUSETTS
RAYMOND J. WALSH JR.
ELECTRICAL
No. 45241
REGISTERED PROFESSIONAL ENGINEER

MASSACHUSETTS BAY TRANSPORTATION AUTHORITY

FITCHBURG COMMUTER RAIL LINE
IMPROVEMENT PROJECT
CONTRACT NO. G67CN01

SOUTH ACTON STATION
SECOND FLOOR–OUTBOUND HEAD HOUSE POWER PLAN

ISSUE	DATE	DESCRIPTION	BY	CHKD.	APP.

HNTB
300 APOLLO DRIVE
CHELMSFORD, MA 01824
(978) 905-4000

PROJECT MANAGER 5/30/12 Date

MASSACHUSETTS BAY TRANSPORTATION AUTHORITY
APPROVED BY:
PROJECT MANAGER 6/30/12 Date

JACOBS
343 CONGRESS STREET
BOSTON, MA 02110
(617) 242-9222

HORIZ: AS SHOWN	DES. BY	DR. BY	CHK. BY	PLAN NO. 168711	ISSUE
VERT: NONE	RJW	JPH	WTG		
DATE: 5/17/12				SHEET E-9	

FILE NAME: P:\MBTA\2008\E2X3780\CAD\700CADD\702STATIONS\South Acton\Electrical\100%\ E7-E10 Head House Power Plans.dwg
PLOT DATE: May 22, 2012 - 8:28am

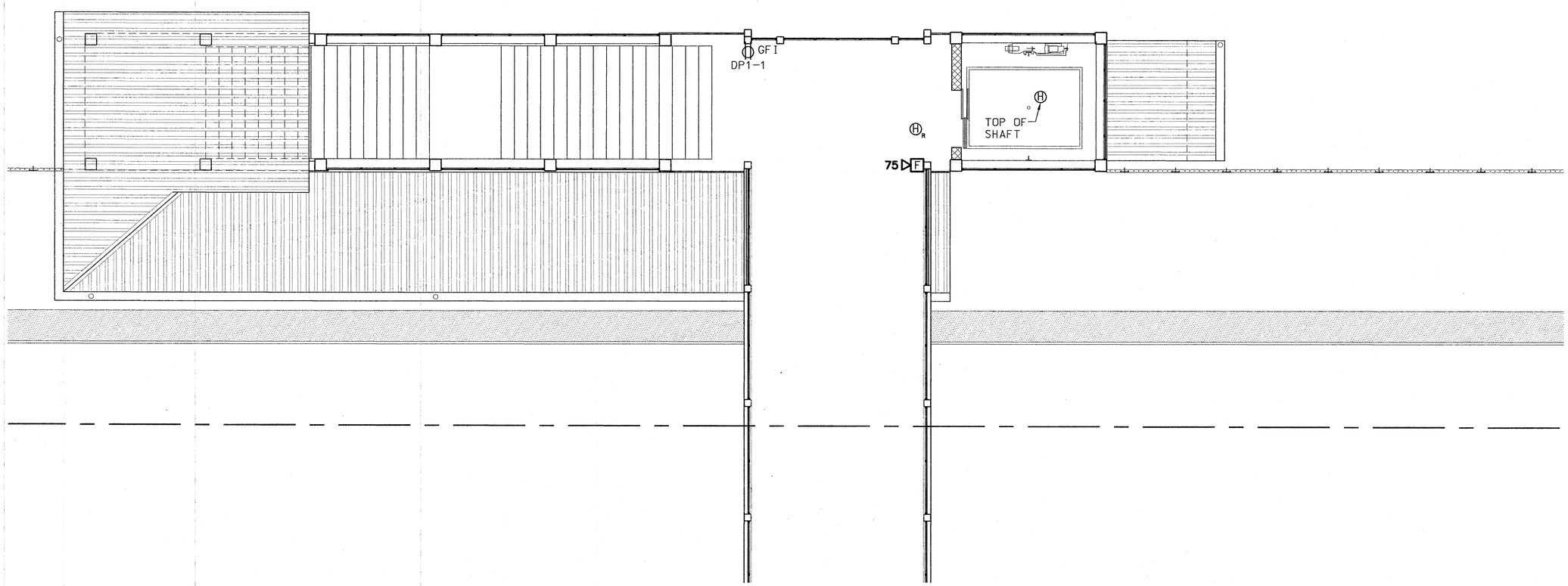

PLAN

0 2 4 8

SCALE: 1/4" = 1'-0"

NOTE:

1. ALL RECEPTACLE CIRCUITS SHALL UTILIZE 2-1/2" X 2-1/2" GALVANIZED WIREWAY AS RACEWAY PATH BACK TO ELECTRICAL ROOM.
2. SEE SHEETS E5 & E6 FOR WIREWAY LOCATION.

COMMONWEALTH OF MASSACHUSETTS
RAYMOND J. WALSH JR.
ELECTRICAL
No. 45241
REGISTERED PROFESSIONAL ENGINEER

MASSACHUSETTS BAY TRANSPORTATION AUTHORITY

FITCHBURG COMMUTER RAIL LINE
IMPROVEMENT PROJECT
CONTRACT NO. G67CN01

SOUTH ACTON STATION SECOND FLOOR – INBOUND HEAD HOUSE POWER PLAN

ISSUE	DATE	DESCRIPTION	BY	CHKD.	APP.

HNTB
300 APOLLO DRIVE
CHELMSFORD, MA 01824
(978) 905-4000

PROJECT MANAGER — Date 5/22/12

MASSACHUSETTS BAY TRANSPORTATION AUTHORITY
APPROVED BY:
PROJECT MANAGER — Date 6/30/12

JACOBS
343 CONGRESS STREET
BOSTON, MA 02110
(617) 242-9222

HORIZ: AS SHOWN
VERT: NONE
DATE: 5/17/12

DES. BY	DR. BY	CHK. BY
RJW	JPH	WTG

PLAN NO. 168712

SHEET E-10

ISSUE

FILE NAME: P:\MBTA\2008\E2X37800\CAD\700CADD\702STATIONS\South Acton\Electrical\100%\ E7-E10 Head House Power Plans.dwg
PLOT DATE: May 22, 2012 – 8:22am

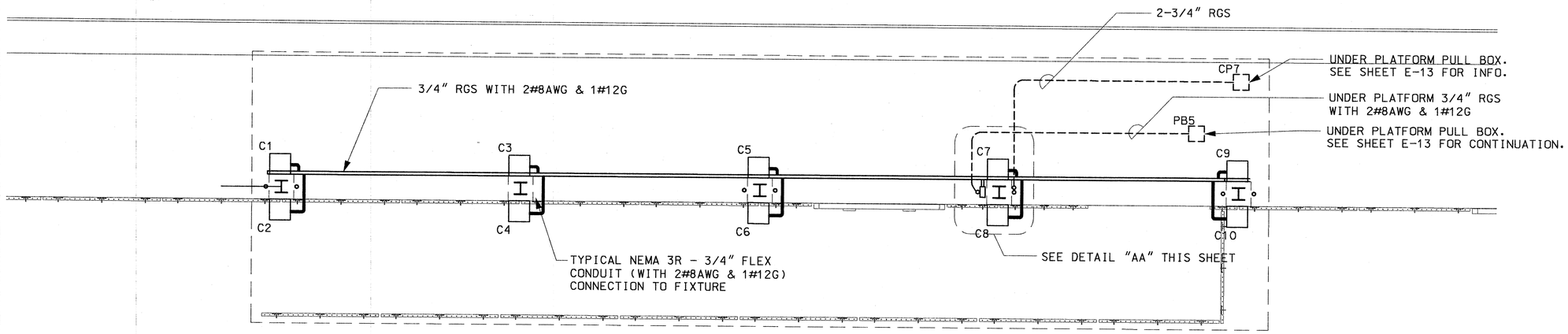

PLAN

0 2 4 8

SCALE: 1/4" = 1'-0"

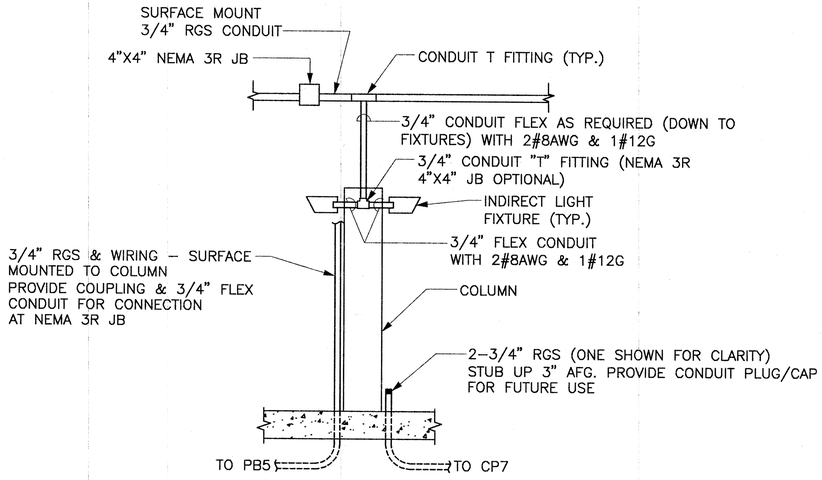

DETAIL "AA"

N.T.S.

NOTE: FIXTURE SUPPORTED AT REAR BY
3"X3"X1/4" GALVANIZED POLE TABS
(NOT SHOWN)

COMMONWEALTH OF MASSACHUSETTS
RAYMOND J. WALSH JR.
ELECTRICAL
No. 45241
REGISTERED PROFESSIONAL ENGINEER

MASSACHUSETTS BAY TRANSPORTATION AUTHORITY

FITCHBURG COMMUTER RAIL LINE
IMPROVEMENT PROJECT
CONTRACT NO. G67CN01

SOUTH ACTON STATION
OUTBOUND CANOPY
LIGHTING PLAN

ISSUE	DATE	DESCRIPTION	BY	CHKD.	APP.

HNTB
300 APOLLO DRIVE
CHELMSFORD, MA 01824
(978) 905-4000

PROJECT MANAGER — Date 5/30/12

MASSACHUSETTS BAY TRANSPORTATION AUTHORITY
APPROVED BY:
PROJECT MANAGER — Date 6/3/12

JACOBS
343 CONGRESS STREET
BOSTON, MA 02110
(617) 242-9222

HORIZ: AS SHOWN	DES. BY	DR. BY	CHK. BY	PLAN NO. 168713	ISSUE
VERT: NONE	RJW	JPH	WTG		
DATE: 5/17/12				SHEET E-11	

FILE NAME: P:\MBTA\2008\E2X37800\CAD\700CADD\702STATIONS\South Acton\Electrical\100%\ E11 & E12 Canopy Lighting Plans.dwg
PLOT DATE: May 17, 2012 - 12:30pm

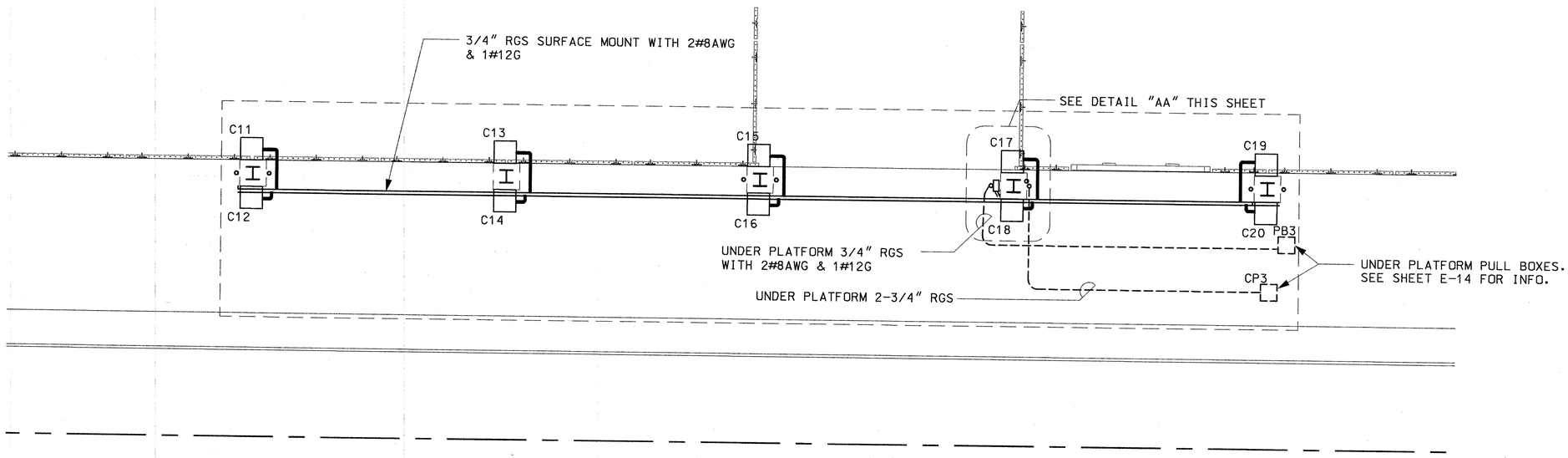

PLAN

0 2 4 8

SCALE: 1/4" = 1'-0"

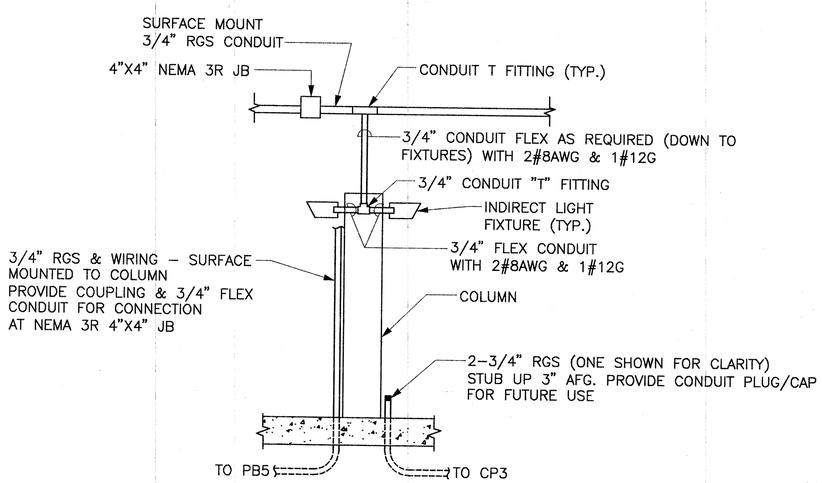

DETAIL "AA"

N.T.S.

NOTE: FIXTURE SUPPORTED AT REAR BY 3"X3"X1/4" GALVANIZED POLE TABS (NOT SHOWN)

COMMONWEALTH OF MASSACHUSETTS
RAYMOND J. WALSH JR.
ELECTRICAL
No. 45241
REGISTERED PROFESSIONAL ENGINEER

MASSACHUSETTS BAY TRANSPORTATION AUTHORITY

FITCHBURG COMMUTER RAIL LINE
IMPROVEMENT PROJECT
CONTRACT NO. G67CN01

SOUTH ACTON STATION
INBOUND CANOPY
LIGHTING PLAN

ISSUE	DATE	DESCRIPTION	BY	CHKD.	APP.

HNTB
300 APOLLO DRIVE
CHELMSFORD, MA 01824
(978) 905-4000

PROJECT MANAGER — Date

MASSACHUSETTS BAY TRANSPORTATION AUTHORITY
APPROVED BY: 6/30/12
PROJECT MANAGER — Date

JACOBS
343 CONGRESS STREET
BOSTON, MA 02110
(617) 242-9222

HORIZ: AS SHOWN	DES. BY	DR. BY	CHK. BY	PLAN NO. 168714	ISSUE
VERT: NONE	RJW	JPH	WTG		
DATE: 5/17/12				SHEET E-12	

FILE NAME: P:\MBTA\2008\E2X37500\CAD\700CADD\702STATIONS\South Acton\Electrical\100%\ E11 & E12 Canopy Lighting Plans.dwg
PLOT DATE: May 17, 2012 – 12:29pm

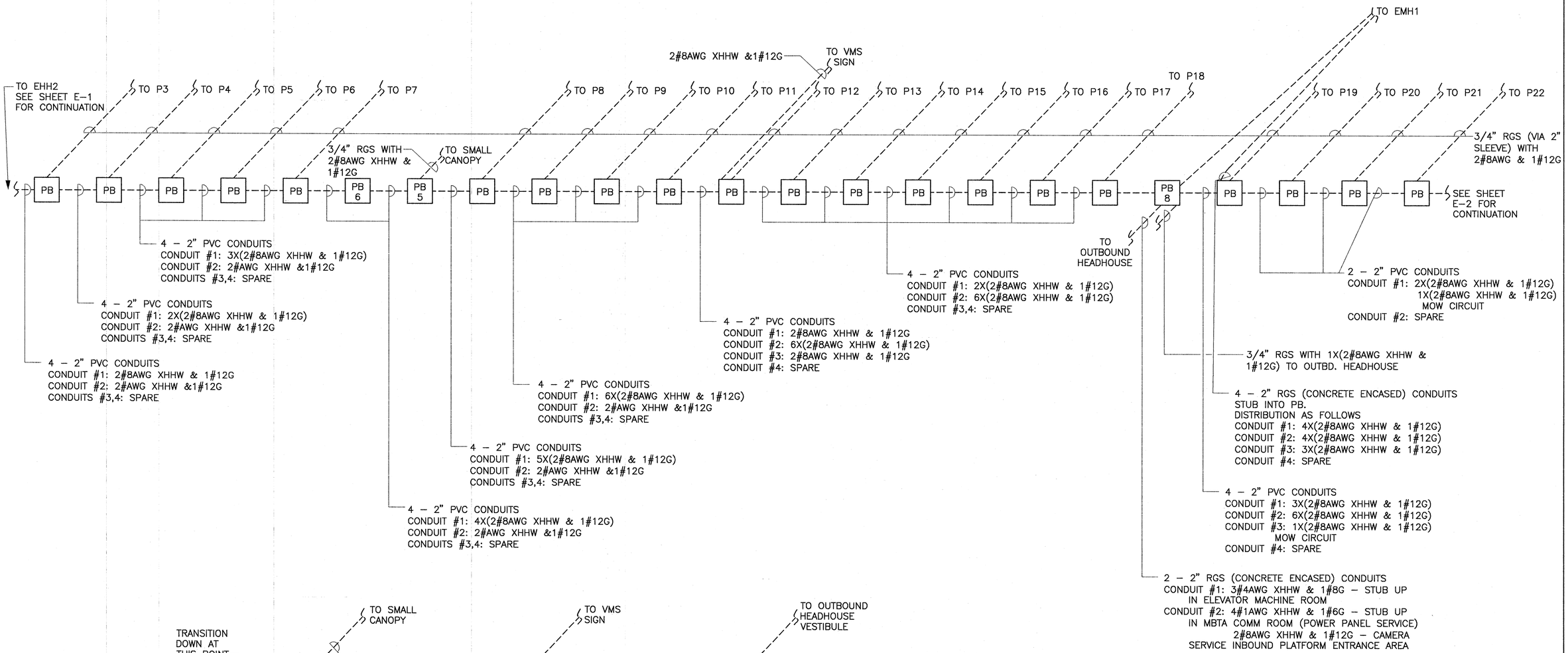

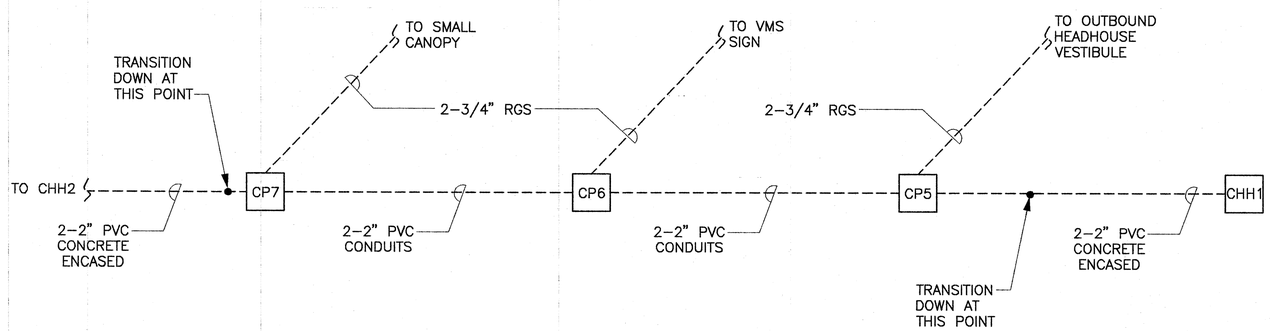

COMMONWEALTH OF MASSACHUSETTS
RAYMOND J. WALSH JR.
ELECTRICAL
No. 45241
REGISTERED PROFESSIONAL ENGINEER

MASSACHUSETTS BAY TRANSPORTATION AUTHORITY

FITCHBURG COMMUTER RAIL LINE
IMPROVEMENT PROJECT
CONTRACT NO. G67CN01

SOUTH ACTON STATION OUTBOUND PLATFORM WIRING

ISSUE	DATE	DESCRIPTION	BY	CHKD.	APP.

HNTB
300 APOLLO DRIVE
CHELMSFORD, MA 01824
(978) 905-4000

PROJECT MANAGER — Date 5/30/12

MASSACHUSETTS BAY TRANSPORTATION AUTHORITY
APPROVED BY:
PROJECT MANAGER — Date 6/30/12

JACOBS
343 CONGRESS STREET
BOSTON, MA 02110
(617) 242-9222

HORIZ:	DES. BY	DR. BY	CHK. BY	PLAN NO. 168715	ISSUE
VERT:	RJW	JPH	WTG		
DATE: 5/17/12				SHEET E-13	

FILE NAME: P:\MBTA\2008\E2X37800\CAD\700CADD\702STATIONS\South Acton\Electrical\100%\ E13.dwg
PLOT DATE: May 22, 2012 – 6:05pm

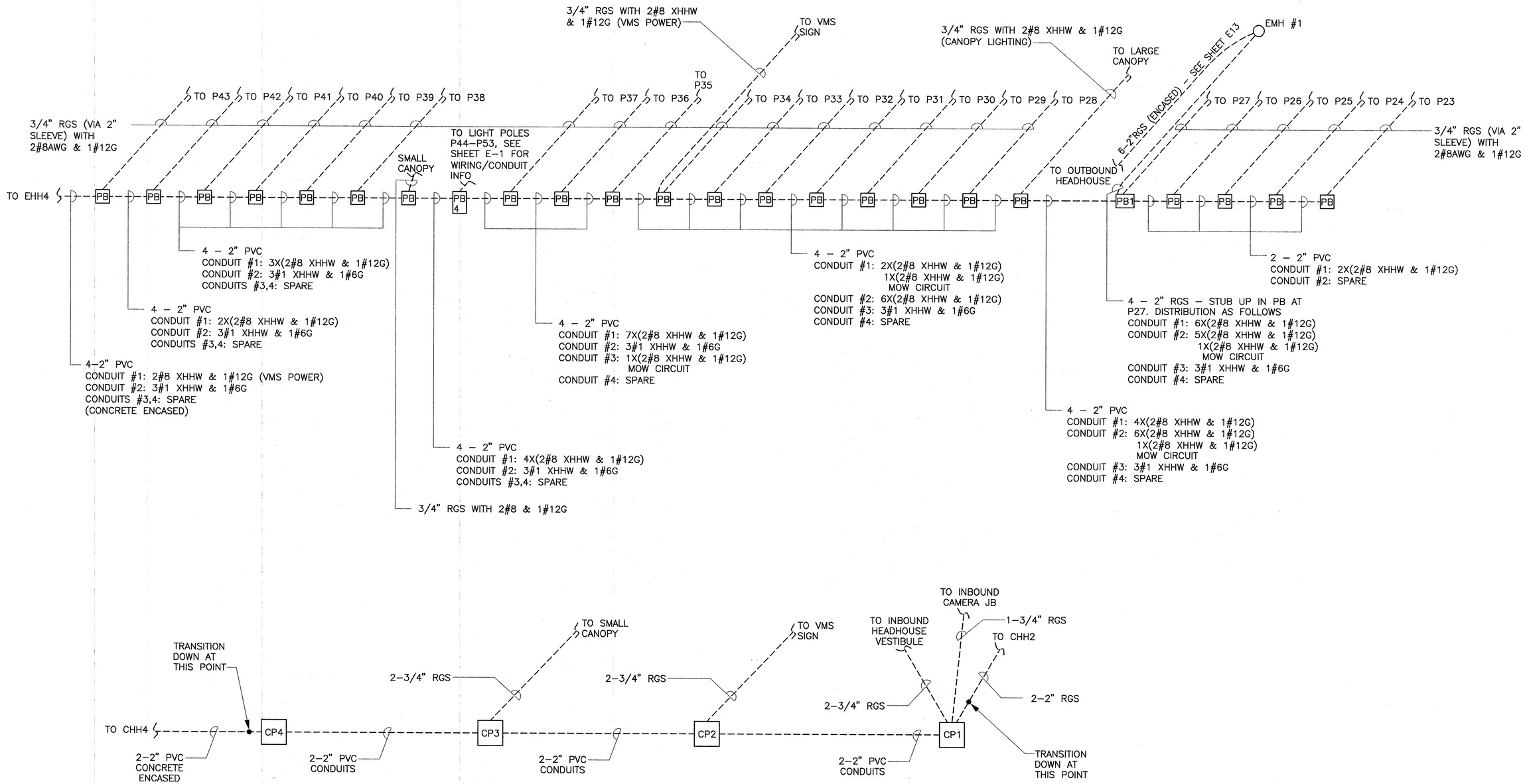

COMMONWEALTH OF MASSACHUSETTS
RAYMOND J. WALSH JR.
ELECTRICAL No. 45241
REGISTERED PROFESSIONAL ENGINEER

MASSACHUSETTS BAY TRANSPORTATION AUTHORITY

FITCHBURG COMMUTER RAIL LINE
IMPROVEMENT PROJECT
CONTRACT NO. G67CN01

SOUTH ACTON STATION INBOUND PLATFORM WIRING

ISSUE	DATE	DESCRIPTION	BY	CHKD.	APP.

HNTB
300 APOLLO DRIVE
CHELMSFORD, MA 01824
(978) 905-4000

PROJECT MANAGER — Date 6/30/12

MASSACHUSETTS BAY TRANSPORTATION AUTHORITY
APPROVED BY:
PROJECT MANAGER — Date 6/30/12

JACOBS
343 CONGRESS STREET
BOSTON, MA 02110
(617) 242-9222

HORIZ:
VERT:
DATE: 5/17/12

DES. BY	DR. BY	CHK. BY
RJW	JPH	WTG

PLAN NO. 168716
SHEET E-14
ISSUE

FILE NAME: P:\MBTA\2008\E2X37800\CAD\700CADD\702STATIONS\South Acton\Electrical\100%\ E14.dwg
PLOT DATE: May 22, 2012 - 6:09pm

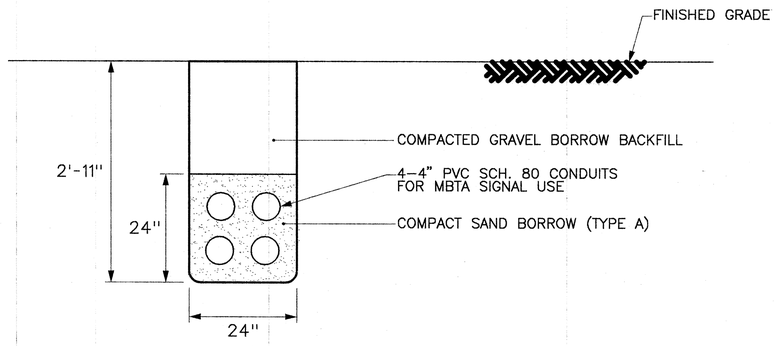

NOTE:
- DUCTBANK UNDER INBOUND/OUTBOUND PLATFORMS ONLY
- PROVIDE CONDUIT SPACERS FOR 4W-4" DUCTBANK

COMM – 4W-4" DUCTBANK DETAIL
NOT TO SCALE

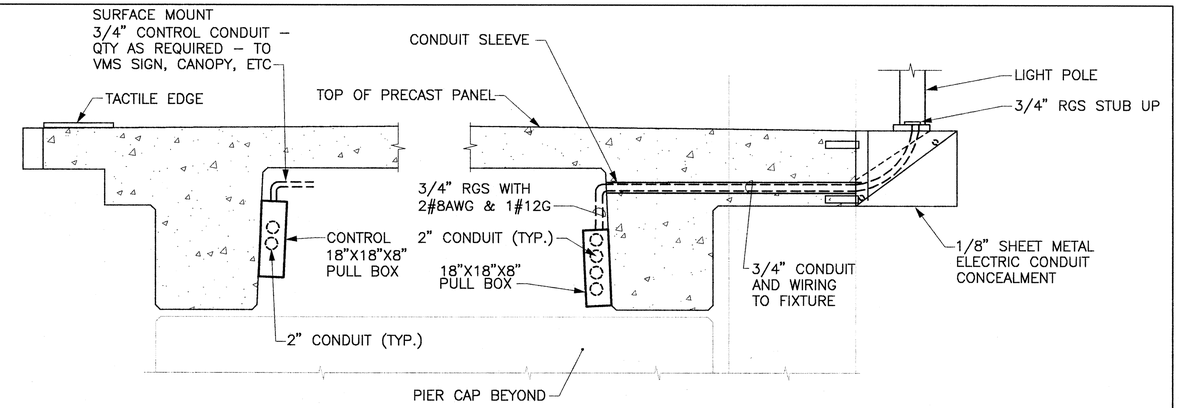

SECTION

TYPICAL PULL BOX INSTALLATION – UNDER PLATFORM
NOT TO SCALE – SEE STRUCTURAL DRAWINGS

- ALL ENCLOSURES SHALL BE NEMA 3R RATED WITH VANDAL PROOF SCREWS.
- DETAIL IS TYPICAL FOR ALL PULL BOXES AT PLATFORM AREA

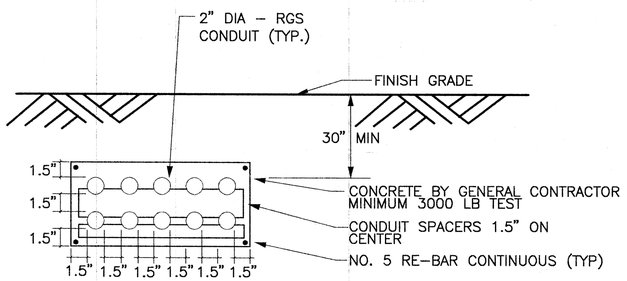

10W-2" DUCTBANK DETAIL
NOT TO SCALE

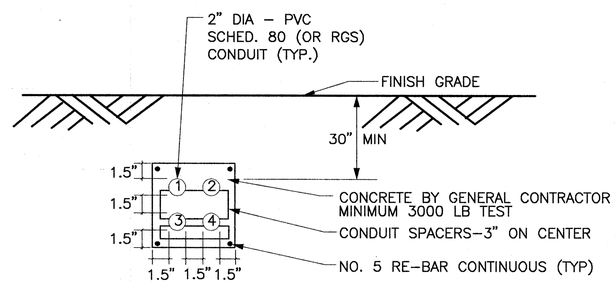

4W-2" DUCTBANK DETAIL
NOT TO SCALE

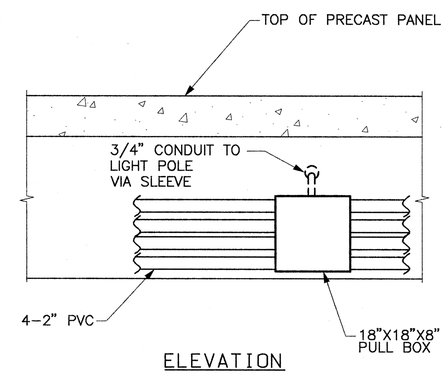

ELEVATION

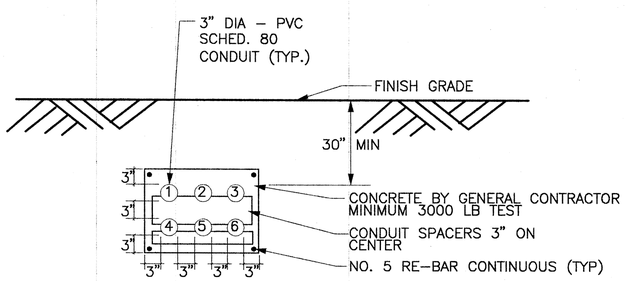

6W-2" DUCTBANK DETAIL
NOT TO SCALE

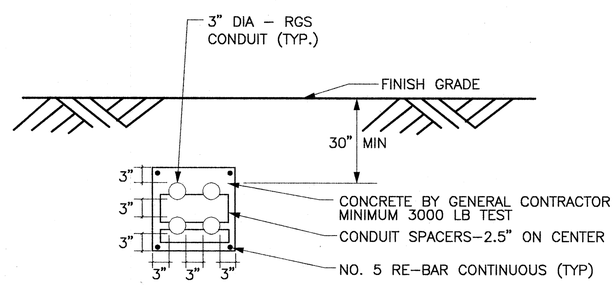

4W-3" DUCTBANK DETAIL
NOT TO SCALE

NOTES:
1. FOR GENERAL CONDUIT ROUTING SEE SHEET E-2.
2. FOR INDIVIDUAL LIGHTING (WIRE SIZES) CIRCUITS AND ROUTING SEE SHEETS E-8 AND E-9
3. CONDUITS, JUNCTION BOXES AND PENETRATIONS IN PRECAST PLATFORM SIMILAR ON OUTBOUND PLATFORM SIDE.
4. IN CANOPY AREAS ROUTE THIS CONDUIT VIA 3½" RSC (OUTER) CONDUIT, SEE SHEET E-5

COMMONWEALTH OF MASSACHUSETTS – RAYMOND J. WALSH JR. – ELECTRICAL No. 45241 – REGISTERED PROFESSIONAL ENGINEER

MASSACHUSETTS BAY TRANSPORTATION AUTHORITY

FITCHBURG COMMUTER RAIL LINE IMPROVEMENT PROJECT
CONTRACT NO. G67CN01

SOUTH ACTON STATION
DUCTBANK DETAILS

ISSUE	DATE	DESCRIPTION	BY	CHKD.	APP.

HNTB – 300 APOLLO DRIVE, CHELMSFORD, MA 01824 (978) 905-4000 – PROJECT MANAGER – Date 5/30/12

MASSACHUSETTS BAY TRANSPORTATION AUTHORITY – APPROVED BY: PROJECT MANAGER – Date 6/30/12

JACOBS – 343 CONGRESS STREET BOSTON, MA 02110 (617) 242-9222

HORIZ:	DES. BY	DR. BY	CHK. BY	PLAN NO. 168717	ISSUE
VERT:	RJW	JPH	RJW		
DATE: 5/17/12				SHEET E-15	

FILE NAME: P:\MBTA\2008\E2X37800\CAD\700CAD\702STATIONS\South Acton\Electrical\100%\ E15.dwg
PLOT DATE: May 17, 2012 – 12:32pm

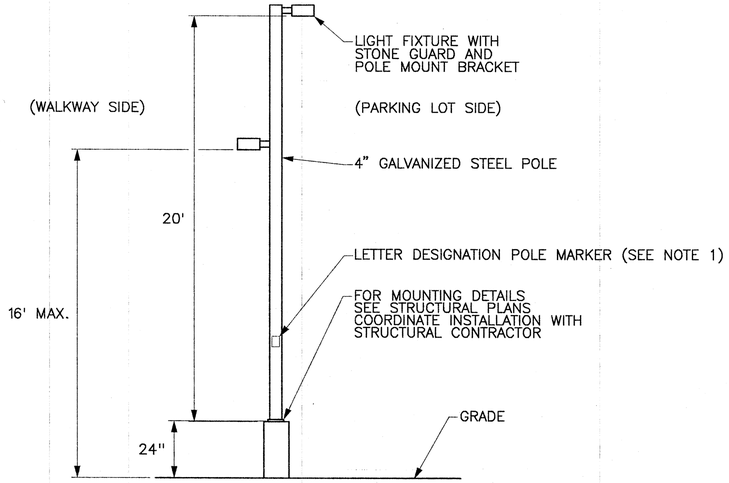

LIGHT STANDARD DETAIL #1
TYPICAL FOR WALKWAY/PARKING AREA
NOT TO SCALE

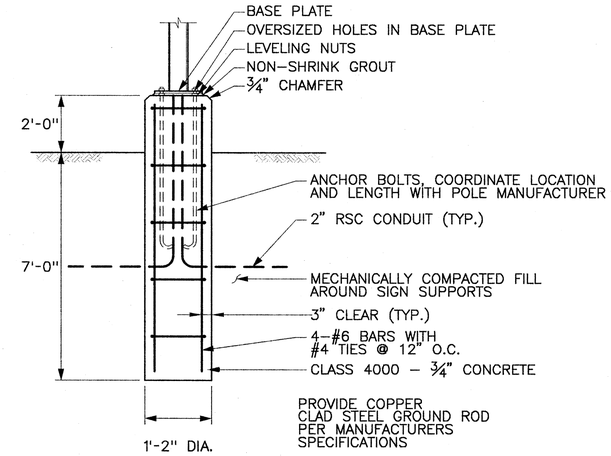

LIGHT POLE FOUNDATION DETAIL - PARKING AREA
NOT TO SCALE

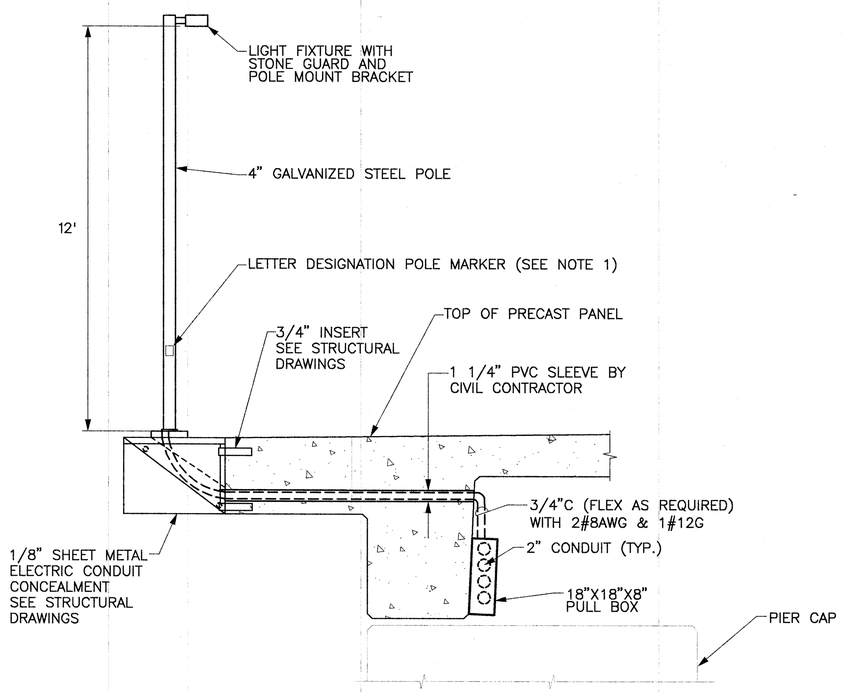

LIGHT STANDARD DETAIL #2
TYPICAL FOR PLATFORM AREA
NOT TO SCALE

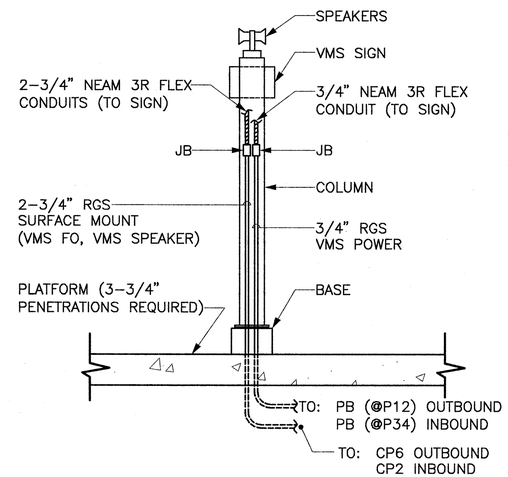

VMS SIGN CONNECTIONS DETAIL
NOT TO SCALE

COMMONWEALTH OF MASSACHUSETTS
RAYMOND J. WALSH JR.
ELECTRICAL
No. 45241
REGISTERED PROFESSIONAL ENGINEER

MASSACHUSETTS BAY TRANSPORTATION AUTHORITY

FITCHBURG COMMUTER RAIL LINE
IMPROVEMENT PROJECT
CONTRACT NO. G67CN01

SOUTH ACTON STATION
ELECTRICAL DETAILS

ISSUE	DATE	DESCRIPTION	BY	CHKD.	APP.

HNTB
300 APOLLO DRIVE
CHELMSFORD, MA 01824
(978) 905-4000
PROJECT MANAGER 5/30/12 Date

MASSACHUSETTS BAY TRANSPORTATION AUTHORITY
APPROVED BY:
PROJECT MANAGER 6/30/12 Date

JACOBS
343 CONGRESS STREET
BOSTON, MA 02110
(617) 242-9222

HORIZ:	DES. BY	DR. BY	CHK. BY	PLAN NO. 168718	ISSUE
VERT:	RJW	JPH	WTG		
DATE: 5/17/12				SHEET E-16	

FILE NAME: P:\MBTA\2008\E2X37800\CAD\700CADD\702STATIONS\South Acton\Electrical\100%\ E16.dwg
PLOT DATE: May 17, 2012 - 12:33pm

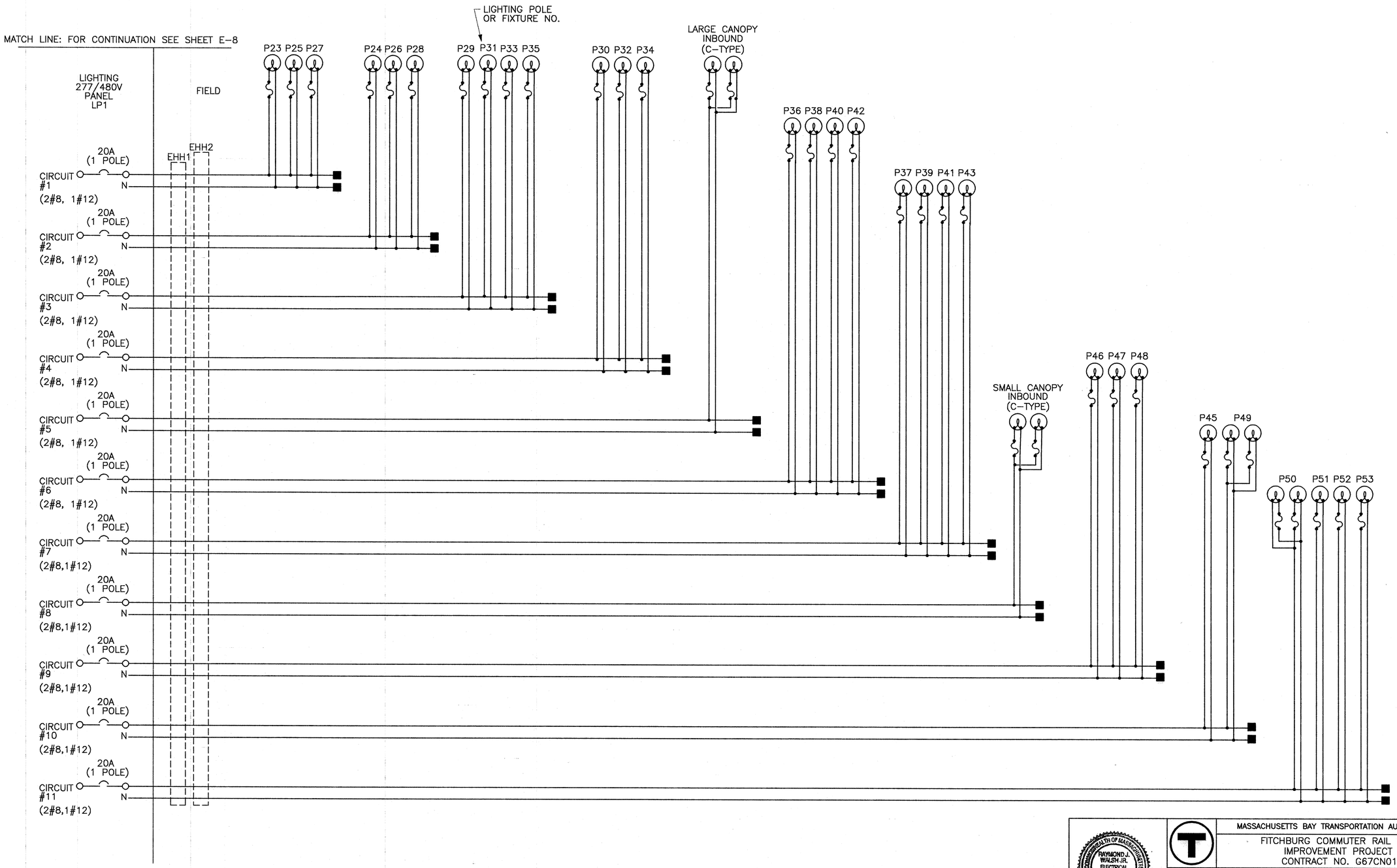

LEGEND:

P# POLE NUMBER
C# FULL CANOPY FIXTURE NUMBER
HH# HAND HOLE NUMBER

SPLICE JOINT
FUSE
LIGHTING FIXTURE WITH LAMP
CIRCUIT BREAKER

NOTES

1. GROUNDING CONDUCTORS NOT SHOWN FOR CLARITY
2. FUSE AMPERE RATING SHALL BE 2A TIME DELAY, MIN 480V CLASS.
3. FOR LIGHT FIXTURE INFORMATION SEE LIGHT FIXTURE SCHEDULE SHEET E-19.
4. POLE "P44" NUMBER NOT USED.

COMMONWEALTH OF MASSACHUSETTS
RAYMOND J. WALSH JR.
ELECTRICAL
No. 45241
REGISTERED PROFESSIONAL ENGINEER

MASSACHUSETTS BAY TRANSPORTATION AUTHORITY

FITCHBURG COMMUTER RAIL LINE
IMPROVEMENT PROJECT
CONTRACT NO. G67CN01

SOUTH ACTON STATION
LIGHTING SCHEMATIC DIAGRAM
SHEET 1

ISSUE	DATE	DESCRIPTION	BY	CHKD.	APP.

HNTB
300 APOLLO DRIVE
CHELMSFORD, MA 01824
(978) 905-4000

PROJECT MANAGER 5/30/12 Date

MASSACHUSETTS BAY TRANSPORTATION AUTHORITY
APPROVED BY:
PROJECT MANAGER 6/30/12 Date

JACOBS
343 CONGRESS STREET
BOSTON, MA 02110
(617) 242-9222

HORIZ:	DES. BY	DR. BY	CHK. BY	PLAN NO. 168719	ISSUE
VERT:	RJW	JPH	RJW		
DATE: 5/17/12				SHEET E-17	

FILE NAME: P:\MBTA\2008\E2X37800\CAD\700CADD\702STATIONS\South Acton\Electrical\100%\ E17.dwg
PLOT DATE: May 22, 2012 - 6:14pm

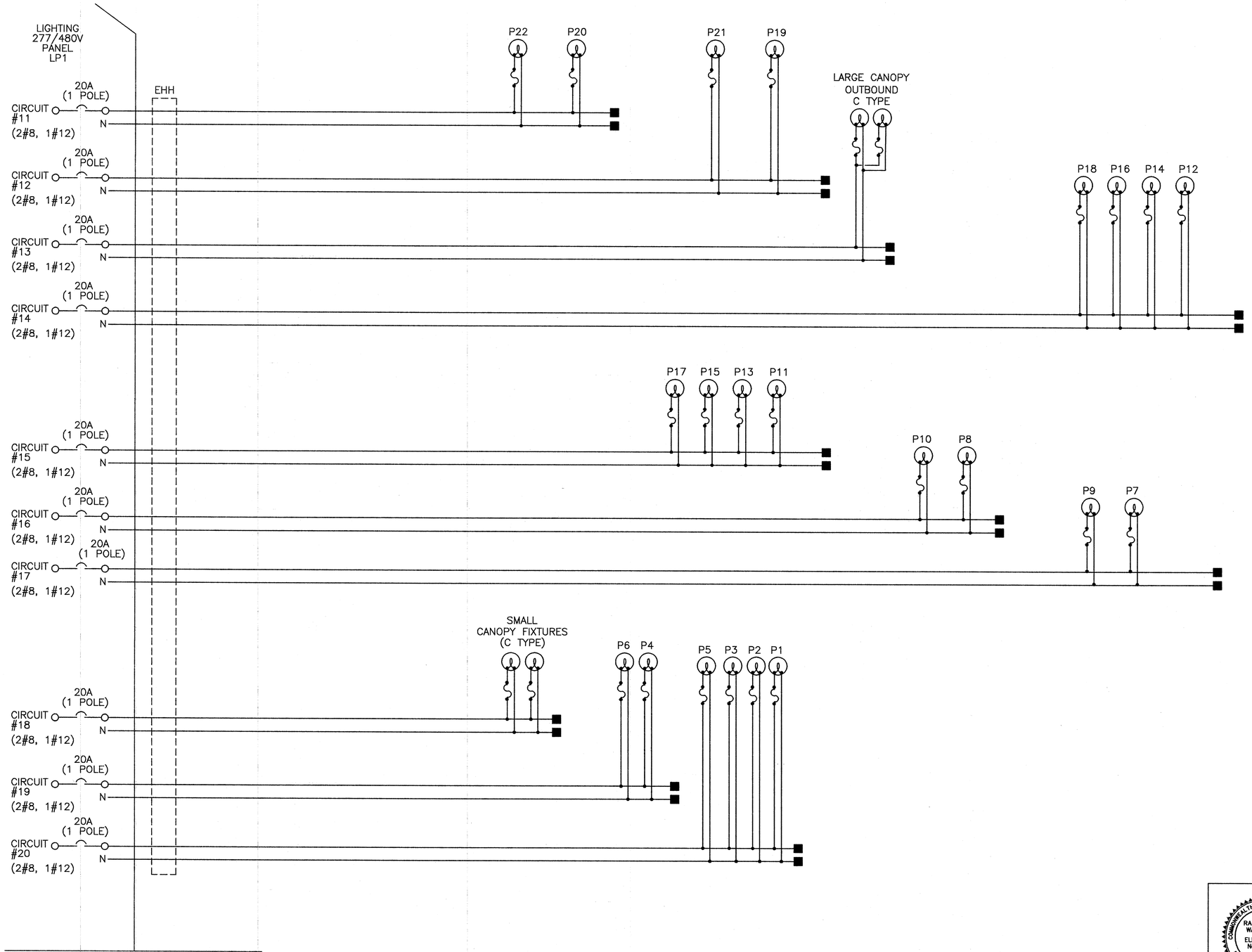

MATCH LINE: FOR CONTINUATION SEE E-9

LEGEND

P# POLE NUMBER
C# FULL CANOPY FIXTURE NUMBER
HH# HAND HOLE NUMBER

SPLICE JOINT
FUSE
LIGHTING FIXTURE WITH LAMP
CIRCUIT BREAKER

NOTES

1. GROUNDING CONDUCTORS NOT SHOWN FOR CLARITY
2. FUSE AMPERE RATING SHALL BE 2A TIME DELAY, MIN 480V CLASS.

COMMONWEALTH OF MASSACHUSETTS
RAYMOND J. WALSH JR.
ELECTRICAL
No. 45241
REGISTERED PROFESSIONAL ENGINEER

MASSACHUSETTS BAY TRANSPORTATION AUTHORITY

FITCHBURG COMMUTER RAIL LINE
IMPROVEMENT PROJECT
CONTRACT NO. G67CN01

SOUTH ACTON STATION
LIGHTING SCHEMATIC DIAGRAM
SHEET 2

ISSUE	DATE	DESCRIPTION	BY	CHKD.	APP.

HNTB
300 APOLLO DRIVE
CHELMSFORD, MA 01824
(978) 905-4000

PROJECT MANAGER Date 5/30/12

MASSACHUSETTS BAY TRANSPORTATION AUTHORITY
APPROVED BY:
PROJECT MANAGER Date 6/30/12

JACOBS
343 CONGRESS STREET
BOSTON, MA 02110
(617) 242-9222

HORIZ:	DES. BY	DR. BY	CHK. BY	PLAN NO. 168720	ISSUE
VERT:	RJW	JPH	RJW		
DATE: 5/17/12				SHEET E-18	

FILE NAME: P:\MBTA\2008\E2X37800\CAD\700CADD\702STATIONS\South Acton\Electrical\100%\ E18.dwg
PLOT DATE: May 17, 2012 - 12:35pm

LIGHT FIXTURE SCHEDULE

SYMBOL	MANUFACTURER / CATALOG No.	LAMP TYPE / WATTS	MOUNTING	VOLTS	REMARKS
P	KIM/1SA/SAR2/150MH277/LG-P/LS/PRA12-34188 GARDCO - (EQUIVALENT) COOPER - (EQUIVALENT)	METAL HALIDE 150W	POLE	277	PLATFORM/WALKWAY LIGHTING SINGLE FIXTURE-FOWARD THROW/FULL CUT-OFF
P	KIM/2SB/SAR2/150MH277/LG-P/LS/PRA12-34188 GARDCO - (EQUIVALENT) COOPER - (EQUIVALENT)	METAL HALIDE 150W (QTY 2)	POLE	277	PLATFORM/WALKWAY LIGHTING TWIN FIXTURE
P'	KIM/1SA/SAR2/150MH277/LG-P/LS/PRA20-4188 GARDCO - (EQUIVALENT) COOPER - (EQUIVALENT)	METAL HALIDE 150W	POLE	277	PARKING/AREA LIGHTING SINGLE FIXTURE
P'	KIM/2SB/SAR2/150MH277/LG-P/LS/PRA20-4188 GARDCO - (EQUIVALENT) COOPER - (EQUIVALENT)	METAL HALIDE 150W (QTY 2)	POLE	277	PARKING/AREA LIGHTING TWIN FIXTURE
C	FORUM - QUAW-100MH-2-WM-277-CF-DS INSIGHT - WT5230BB4-CBA-WVS-240V COOPER - (EQUIVALENT)	METAL HALIDE 100W	SURFACE	277	HALF CANOPY AREA UPLIGHT FINISH TO BE APPROVED BY ARCHITECT
R	REBELLE - STREAMLINE 6000	METAL HALIDE 100W	SURFACE	277	INDIRECT RAMP FIXTURE

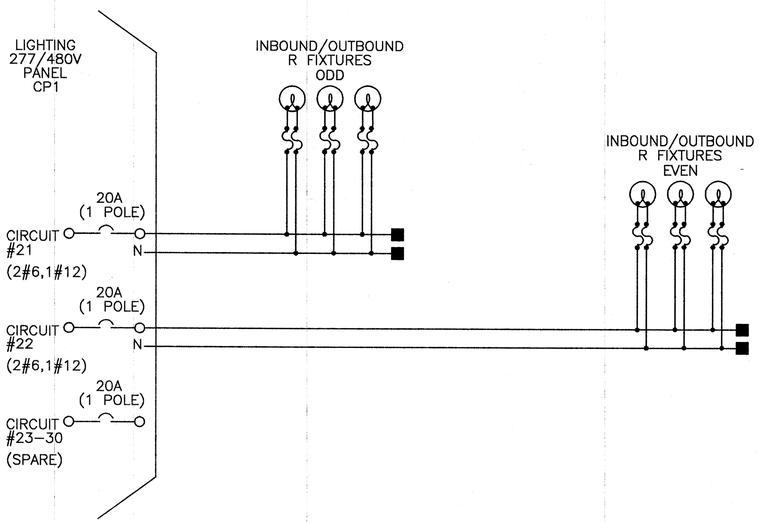

COMMONWEALTH OF MASSACHUSETTS
RAYMOND J. WALSH JR.
ELECTRICAL
No. 45241
REGISTERED PROFESSIONAL ENGINEER

MASSACHUSETTS BAY TRANSPORTATION AUTHORITY

FITCHBURG COMMUTER RAIL LINE
IMPROVEMENT PROJECT
CONTRACT NO. G67CN01

SOUTH ACTON STATION
LIGHTING SCHEMATIC DIAGRAM
SHEET 3

ISSUE	DATE	DESCRIPTION	BY	CHKD.	APP.

HNTB 300 APOLLO DRIVE CHELMSFORD, MA 01824 (978) 905-4000

PROJECT MANAGER 5/30/12 Date

MASSACHUSETTS BAY TRANSPORTATION AUTHORITY
APPROVED BY: PROJECT MANAGER 6/30/12 Date

JACOBS 343 CONGRESS STREET BOSTON, MA 02110 (617) 242-9222

HORIZ:
VERT:
DATE: 5/17/12

DES. BY	DR. BY	CHK. BY
RJW	JPH	RJW

PLAN NO. 168721

SHEET E-19

ISSUE

FILE NAME: P:\MBTA\2008\E2X37800\CAD\700CADD\702STATIONS\South Acton\Electrical\100%\ E19.dwg
PLOT DATE: May 17, 2012 - 12:39pm

PANEL CIRCUIT AND LOAD SCHEDULE

SERVICE : MAIN DISTRIBUTION
DESIGNATION : MAIN DISTRIBUTION PANEL – MDP
LOCATION : ELECTRIC ROOM

LOAD DESCRIPTION	QTY	UNIT V.A.	VA PER PHASE A	VA PER PHASE B	VA PER PHASE C	TRIP	POLES	WIRE SIZE	WIRE SIZE	POLES	TRIP	VA PER PHASE A	VA PER PHASE B	VA PER PHASE C	UNIT V.A.	QTY	LOAD DESCRIPTION
ELEVATOR – INBOUND	–	3300	1100			80	3	3	3	3	80	1100			3300	–	ELEVATOR – OUTBOUND
				1100									1100				
					1100									1100			
LIGHTING CONTACTOR – (LP1)	–	1275	425			100	3	1	3	3	75	1500			4500	–	45 KVA TRANSFORMER
				425									1500				
					425									1500			
–	–	–	–			–	–	–	–	–	–	–			–	–	–
–	–	–		–		–	–	–	–	–	–		–		–	–	–
–	–	–			–	–	–	–	–	–	–			–	–	–	–
–	–	–	–			–	–	–	–	–	–	–			–	–	–
–	–	–		–		–	–	–	–	–	–		–		–	–	–
–	–	–			–	–	–	–	–	–	–			–	–	–	–
–	–	–	–			–	–	–	–	–	–	–			–	–	–
–	–	–		–		–	–	–	–	–	–		–		–	–	–
–	–	–			–	–	–	–	–	–	–			–	–	–	–
–	–	–	–			–	–	–	–	–	–	–			–	–	–
–	–	–		–		–	–	–	–	–	–		–		–	–	–
–	–	–			–	–	–	–	–	–	–			–	–	–	–
–	–	–	–			–	–	–	–	–	–	–			–	–	–
–	–	–		–		–	–	–	–	–	–		–		–	–	–
–	–	–			–	–	–	–	–	–	–			–	–	–	–
		VA SUBTOTAL LEFT	1525	1525	1525				2700	2700	2700	VA SUBTOTAL RIGHT					TOTAL CONNECTED LOAD; AMPERES 15.25
											12675	SUBTOTAL					

VOLTAGE: 480/277 CYCLE: 60 Hz PHASE: 3 WIRES: 3
SOLID NEUTRAL: 400 AMPS
MAIN LUGS: 400 AMP FRAME – AMP TRIP
AIC 20 KA MAIN COPPER BUS: 400 AMPS
MAINS: TOP [X] BOTTOM [ ]

MANUFACTURER: SQUARE D
TYPE AND CAT. NO. : –
NO EQUAL: [ ] APPROVED EQUAL: [X]
MOUNTING: SURFACE: [X] FLUSH: [ ]

1. BOLT ON BRANCH BREAKERS
2. COPPER BUS ONLY

PANEL CIRCUIT AND LOAD SCHEDULE

SERVICE : LIGHTING
DESIGNATION : LIGHTING PANEL – LP
LOCATION : ELECTRIC ROOM

LOAD DESCRIPTION	QTY	UNIT V.A.	VA PER PHASE A	VA PER PHASE B	VA PER PHASE C	TRIP	POLES	WIRE SIZE	WIRE SIZE	POLES	TRIP	VA PER PHASE A	VA PER PHASE B	VA PER PHASE C	UNIT V.A.	QTY	LOAD DESCRIPTION
P23, P25, P27	–	450	450			20	1	8	8	1	20	450			–	–	P24, P26, P28
P29, P31, P33, P35	–	600		600		20	1	8	8	1	20		450		–	–	P30, P32, P34
MAIN CANOPY INBOUND	–	700			700	20	1	8	8	1	20			600	–	–	P36, P38, P40, P42
P37, P39, P41, P43	–	600	600			20	1	8	8	1	20	600			–	–	SMALL CANOPY INBOUND
P46, P47, P48	–	600		600		20	1	8	8	1	20		450		–	–	P44, P45, P49
P50, P51, P52, P53	–	600			600	20	1	8	8	1	20			700	–	–	INB/OUT–BLP(1)
LEVEL 2 BRIDGE	–	700	700			20	1	8	8	1	20	700			–	–	INB/OUT–BLP(2)
P22, P20	–	300		300		20	1	8	8	1	20		300		–	–	P21, P19
MAIN CANOPY OUTBOUND	–	800			800	20	1	8	8	1	20			600	–	–	P12, P14, P16, P18
P13, P15, P17	–	450	450			20	1	8	8	1	20	300			–	–	P8, P10
P7, P9	–	300		300		20	1	8	8	1	20		600		–	–	SMALL CANOPY OUTBOUND
P4, P6	–	300			300	20	1	8	8	1	20			600	–	–	P1, P2, P3, P5
SPARE	–	–	–			20	1	–	–	–	–	–			–	–	SPARE
SPARE	–	–		–		20	1	–	–	–	–		–		–	–	SPARE
SPARE	–	–			–	20	1	–	–	–	–			–	–	–	SPARE
		VA SUBTOTAL LEFT	2200	1800	2400				2050	1800	2500	VA SUBTOTAL RIGHT					TOTAL CONNECTED LOAD; AMPERES 15.34
											12750	SUBTOTAL					

VOLTAGE: 480/277 CYCLE: 60 Hz PHASE: 3 WIRES: 4
SOLID NEUTRAL: 100 AMPS
MAIN LUGS: 100 AMP FRAME – AMP TRIP
AIC 20 KA MAIN COPPER BUS: 100 AMPS
MAINS: TOP [X] BOTTOM [ ]

MANUFACTURER: SQUARE D
TYPE AND CAT. NO. : –
NO EQUAL: [ ] APPROVED EQUAL: [X]
MOUNTING: SURFACE: [X] FLUSH: [ ]

1. BOLT ON BRANCH BREAKERS
2. COPPER BUS ONLY

COMMONWEALTH OF MASSACHUSETTS
RAYMOND J. WALSH JR.
ELECTRICAL
No. 45241
REGISTERED PROFESSIONAL ENGINEER

MASSACHUSETTS BAY TRANSPORTATION AUTHORITY

FITCHBURG COMMUTER RAIL LINE
IMPROVEMENT PROJECT
CONTRACT NO. G67CN01

SOUTH ACTON STATION
ELECTRICAL PANEL SCHEDULES
SHEET 1 OF 2

ISSUE	DATE	DESCRIPTION	BY	CHKD.	APP.

HNTB
300 APOLLO DRIVE
CHELMSFORD, MA 01824
(978) 905-4000

PROJECT MANAGER 5/20/12 Date

MASSACHUSETTS BAY TRANSPORTATION AUTHORITY
APPROVED BY: 6/30/12
PROJECT MANAGER Date

JACOBS
343 CONGRESS STREET
BOSTON, MA 02110
(617) 242-9222

	DES. BY	DR. BY	CHK. BY
HORIZ:	RJW	JPH	RJW
VERT:			
DATE: 5/17/12			

PLAN NO. 168722
SHEET E–20
ISSUE

FILE NAME: P:\MBTA\2008\E2X37800\CAD\700CADD\702STATIONS\South Acton\Electrical\100%\ E20,21,23,24.dwg
PLOT DATE: May 17, 2012 – 12:40pm

PANEL CIRCUIT AND LOAD SCHEDULE

SERVICE : GENERAL POWER
DESIGNATION : DP1
LOCATION : COMMUNICATIONS ROOM

LOAD DESCRIPTION	QTY	UNIT V.A.	VA PER PHASE A	VA PER PHASE B	VA PER PHASE C	TRIP	POLES	WIRE SIZE	WIRE SIZE	POLES	TRIP	VA PER PHASE A	VA PER PHASE B	VA PER PHASE C	UNIT V.A.	QTY	LOAD DESCRIPTION
CAMERA POWER INBOUND	–	–	500			20	1	–	–	1	20	1500			1500	–	ELEVATOR SUMP
CAMERA POWER OUTBOUND	–	–		500		20	1	–	–	1	20		1000		–	–	RACK POWER
SPARE	–	–			–	20	1	–	–	1	20			1000	–	–	RACK POWER
SPARE	–	–	–			20	1	–	–	1	20	500			–	–	MOW (MAINTENANCE OF WAY) BOX
SPARE	–	–		–		20	1	–	–	1	20		–		–	–	SPARE
SPARE	–	–			–	20	1	–	–	1	20			–	–	–	SPARE
SPARE	–	–	–			20	1	–	–	1	20	–			–	–	SPARE
SPARE	–	–		–		20	1	–	–	1	20		–		–	–	SPARE
SPARE	–	–			–	20	1	–	–	1	20			–	–	–	SPARE
SPARE	–	–	–			20	1	–	–	1	20	–			–	–	SPARE
SPARE	–	–		–		20	1	–	–	1	20		–		–	–	SPARE
SPARE	–	–			–	20	1	–	–	1	20			–	–	–	SPARE
SPARE	–	–	–			20	1	–	–	1	20	–			–	–	SPARE
SPARE	–	–		–		20	1	–	–	1	20		–		–	–	SPARE
SPARE	–	–			–	20	1	–	–	1	20			–	–	–	SPARE
		VA SUBTOTAL LEFT	500	500	–				2000	1000	1000				VA SUBTOTAL RIGHT		TOTAL CONNECTED LOAD; AMPERES 14.0
										5000					SUBTOTAL		

VOLTAGE: 120/208 CYCLE: 60 Hz PHASE: 3 WIRES: 4
SOLID NEUTRAL: 100 AMPS
MAIN LUGS: 100 AMP FRAME 100 AMP TRIP
AIC 20 KA MAIN COPPER BUS: 100 AMPS
MAINS: TOP [X] BOTTOM [ ]

MANUFACTURER: SQUARE D
TYPE AND CAT. NO. : –
NO EQUAL: [ ] APPROVED EQUAL: [X]
MOUNTING: SURFACE: [X] FLUSH: [ ]

1. BOLT ON BRANCH BREAKERS
2. COPPER BUS ONLY

PANEL CIRCUIT AND LOAD SCHEDULE

SERVICE : GENERAL POWER
DESIGNATION : DP2
LOCATION : ELECTRIC ROOM

LOAD DESCRIPTION	QTY	UNIT V.A.	VA PER PHASE A	VA PER PHASE B	VA PER PHASE C	TRIP	POLES	WIRE SIZE	WIRE SIZE	POLES	TRIP	VA PER PHASE A	VA PER PHASE B	VA PER PHASE C	UNIT V.A.	QTY	LOAD DESCRIPTION
TEMP. MBTA COMM. SHED	–	3000	1500			60	2	1	–	1	20	1500			1500	–	ELEVATOR SUMP
				1500					–	1	20		500		500	–	FIRE ALARM
SPARE	–	–			–	20	1	–	–	1	20			200	200	–	OUTLET
SPARE	–	–	–			20	1	–	–	1	20	200			200	–	OUTLET
SPARE	–	–		–		20	1	–	–	1	20		500		–	–	MOW (MAINTENANCE OF WAY) BOX
SPARE	–	–			–	20	1	–	–	1	20			–	–	–	SPARE
SPARE	–	–	–			20	1	–	–	1	20	–			–	–	SPARE
SPARE	–	–		–		20	1	–	–	1	20		–		–	–	SPARE
SPARE	–	–			–	20	1	–	–	1	20			–	–	–	SPARE
SPARE	–	–	–			20	1	–	–	1	20	–			–	–	SPARE
SPARE	–	–		–		20	1	–	–	1	20		–		–	–	SPARE
SPARE	–	–			–	20	1	–	–	1	20			–	–	–	SPARE
SPARE	–	–	–			20	1	–	–	1	20	–			–	–	SPARE
SPARE	–	–		–		20	1	–	–	1	20		–		–	–	SPARE
SPARE	–	–			–	20	1	–	–	1	20			–	–	–	SPARE
		VA SUBTOTAL LEFT	1500	1500	–				1700	1000	200				VA SUBTOTAL RIGHT		TOTAL CONNECTED LOAD; AMPERES 16.4
										5900					SUBTOTAL		

VOLTAGE: 120/208 CYCLE: 60 Hz PHASE: 3 WIRES: 4
SOLID NEUTRAL: 100 AMPS
MAIN LUGS: 100 AMP FRAME 100 AMP TRIP
AIC 20 KA MAIN COPPER BUS: 100 AMPS
MAINS: TOP [X] BOTTOM [ ]

MANUFACTURER: SQUARE D
TYPE AND CAT. NO. : –
NO EQUAL: [ ] APPROVED EQUAL: [X]
MOUNTING: SURFACE: [X] FLUSH: [ ]

1. BOLT ON BRANCH BREAKERS
2. COPPER BUS ONLY

PANEL CIRCUIT AND LOAD SCHEDULE

SERVICE : COMM SHED
DESIGNATION : DP3
LOCATION : MBTA COMMUNICATIONS SHED

LOAD DESCRIPTION	QTY	UNIT V.A.	VA PER PHASE A	VA PER PHASE B	VA PER PHASE C	TRIP	POLES	WIRE SIZE	WIRE SIZE	POLES	TRIP	VA PER PHASE A	VA PER PHASE B	VA PER PHASE C	UNIT V.A.	QTY	LOAD DESCRIPTION
RACK PWR	–	1000	1000			20	1	12	8	1	20	500			500	–	INBOUND VMS SIGN
RACK PWR	–	1000		1000		20	1	12	8	1	20		500		500	–	OUTBOUND VMS SIGN
SPARE	–	–			–	20	1	–	–	1	20			–	–	–	SPARE
SPARE	–	–	–			20	1	–	–	1	20	–			–	–	SPARE
SPARE	–	–		–		20	1	–	–	1	20		–		–	–	SPARE
SPACE	–	–			–	–	–	–	–	–	–			–	–	–	SPACE
SPACE	–	–	–			–	–	–	–	–	–	–			–	–	SPACE
SPACE	–	–		–		–	–	–	–	–	–		–		–	–	SPACE
SPACE	–	–			–	–	–	–	–	–	–			–	–	–	SPACE
SPACE	–	–	–			–	–	–	–	–	–	–			–	–	SPACE
SPACE	–	–		–		–	–	–	–	–	–		–		–	–	SPACE
SPACE	–	–			–	–	–	–	–	–	–			–	–	–	SPACE
SPACE	–	–	–			–	–	–	–	–	–	–			–	–	SPACE
SPACE	–	–		–		–	–	–	–	–	–		–		–	–	SPACE
SPACE	–	–			–	–	–	–	–	–	–			–	–	–	SPACE
		VA SUBTOTAL LEFT	1000	1000	–				500	500	–				VA SUBTOTAL RIGHT		TOTAL CONNECTED LOAD; AMPERES 8.3
										3000					SUBTOTAL		

VOLTAGE: 120/208 CYCLE: 60 Hz PHASE: 3 WIRES: 4
SOLID NEUTRAL: 100 AMPS
MAIN LUGS: 100 AMP FRAME 50 AMP TRIP
AIC 20 KA MAIN COPPER BUS: 100 AMPS
MAINS: TOP [X] BOTTOM [ ]

MANUFACTURER: SQUARE D
TYPE AND CAT. NO. : –
NO EQUAL: [ ] APPROVED EQUAL: [X]
MOUNTING: SURFACE: [X] FLUSH: [ ]

1. BOLT ON BRANCH BREAKERS
2. COPPER BUS ONLY

COMMONWEALTH OF MASSACHUSETTS
RAYMOND J. WALSH JR.
ELECTRICAL
No. 45241
REGISTERED PROFESSIONAL ENGINEER

MASSACHUSETTS BAY TRANSPORTATION AUTHORITY

FITCHBURG COMMUTER RAIL LINE
IMPROVEMENT PROJECT
CONTRACT NO. G67CN01

SOUTH ACTON STATION
ELECTRICAL PANEL SCHEDULES
SHEET 2 OF 2

ISSUE	DATE	DESCRIPTION	BY	CHKD.	APP.

JACOBS 343 CONGRESS STREET BOSTON, MA 02110 (617) 242-9222

HNTB 300 APOLLO DRIVE CHELMSFORD, MA 01824 (978) 905-4000

PROJECT MANAGER Date 5/30/12

MASSACHUSETTS BAY TRANSPORTATION AUTHORITY
APPROVED BY: PROJECT MANAGER Date 6/30/12

HORIZ:
VERT:
DATE: 5/17/12
DES. BY RJW DR. BY JPH CHK. BY RJW

PLAN NO. 168723
SHEET E-21
ISSUE

FILE NAME: P:\MBTA\2008\E2X37800\CAD\700CADD\702STATIONS\South Acton\Electrical\100%\ E20,21,23,24.dwg
PLOT DATE: May 22, 2012 – 6:17pm

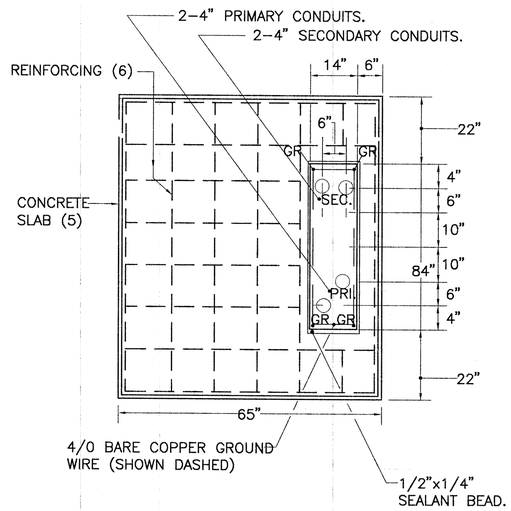

NSTAR PADMOUNT TRANSFORMER FOUNDATION

N.T.S

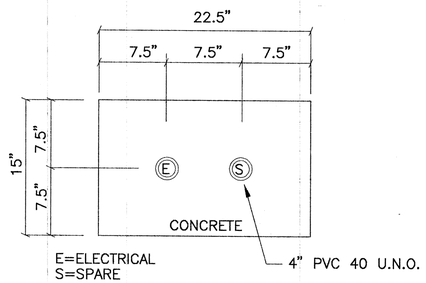

SECTION A-A

NOTE:
CONDUCTORS TO BE FURNISHED BY NSTAR
3C-5KV -INSULATED
PRIMARY FEEDER CABLE

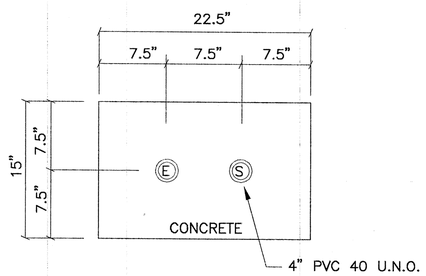

SECTION B-B

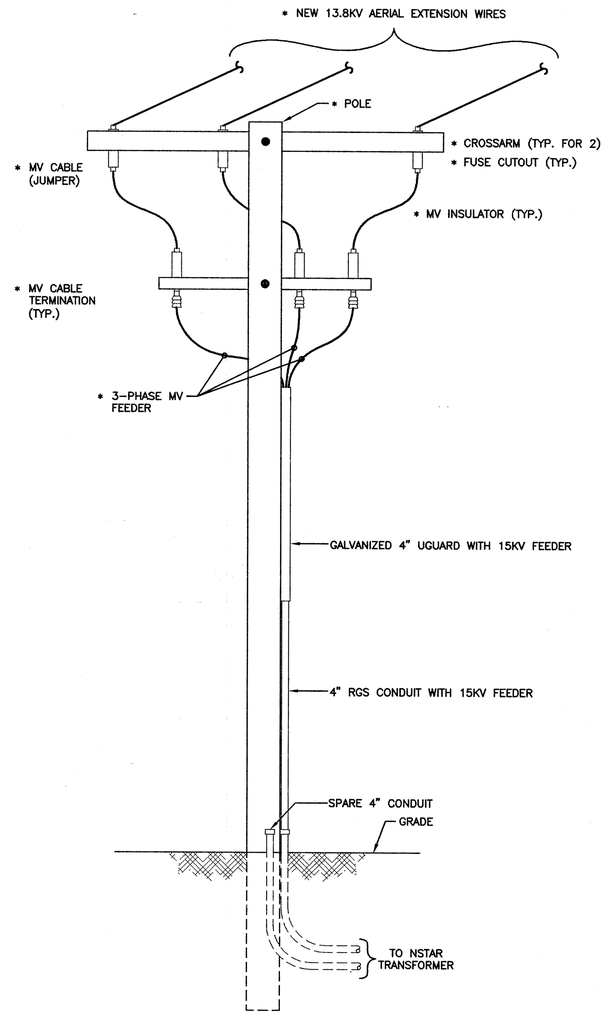

* DENOTES ITEM PROVIDED BY NSTAR

RISER POLE DETAIL

NTS

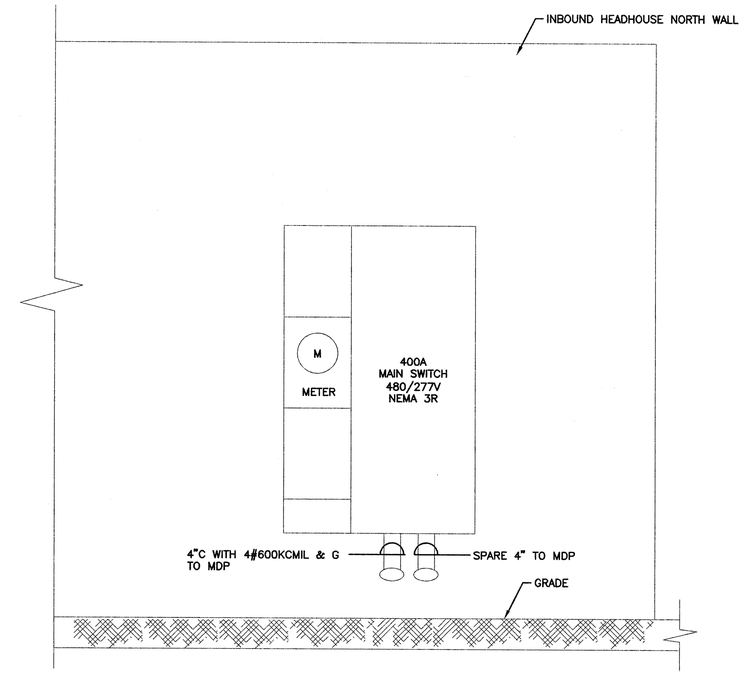

METERING/MAIN DISCONNECT

NTS

COMMONWEALTH OF MASSACHUSETTS
RAYMOND J. WALSH JR.
ELECTRICAL
No. 45241
REGISTERED PROFESSIONAL ENGINEER

MASSACHUSETTS BAY TRANSPORTATION AUTHORITY

FITCHBURG COMMUTER RAIL LINE
IMPROVEMENT PROJECT
CONTRACT NO. G67CN01

SOUTH ACTON STATION
ELECTRICAL SERVICE DETAILS

ISSUE	DATE	DESCRIPTION	BY	CHKD.	APP.

HNTB
300 APOLLO DRIVE
CHELMSFORD, MA 01824
(978) 905-4000

PROJECT MANAGER 5/22/12 Date

MASSACHUSETTS BAY TRANSPORTATION AUTHORITY
APPROVED BY: 6/30/12
PROJECT MANAGER Date

JACOBS
343 CONGRESS STREET
BOSTON, MA 02110
(617) 242-9222

HORIZ:	DES. BY	DR. BY	CHK. BY	PLAN NO. 168724	ISSUE
VERT:	RJW	JPH	RJW		
DATE: 5/17/12				SHEET E-22	

FILE NAME: P:\MBTA\2008\E2X37800\CAD\700CADD\702STATIONS\South Acton\Electrical\100%\ E22.dwg
PLOT DATE: May 17, 2012 - 12:42pm

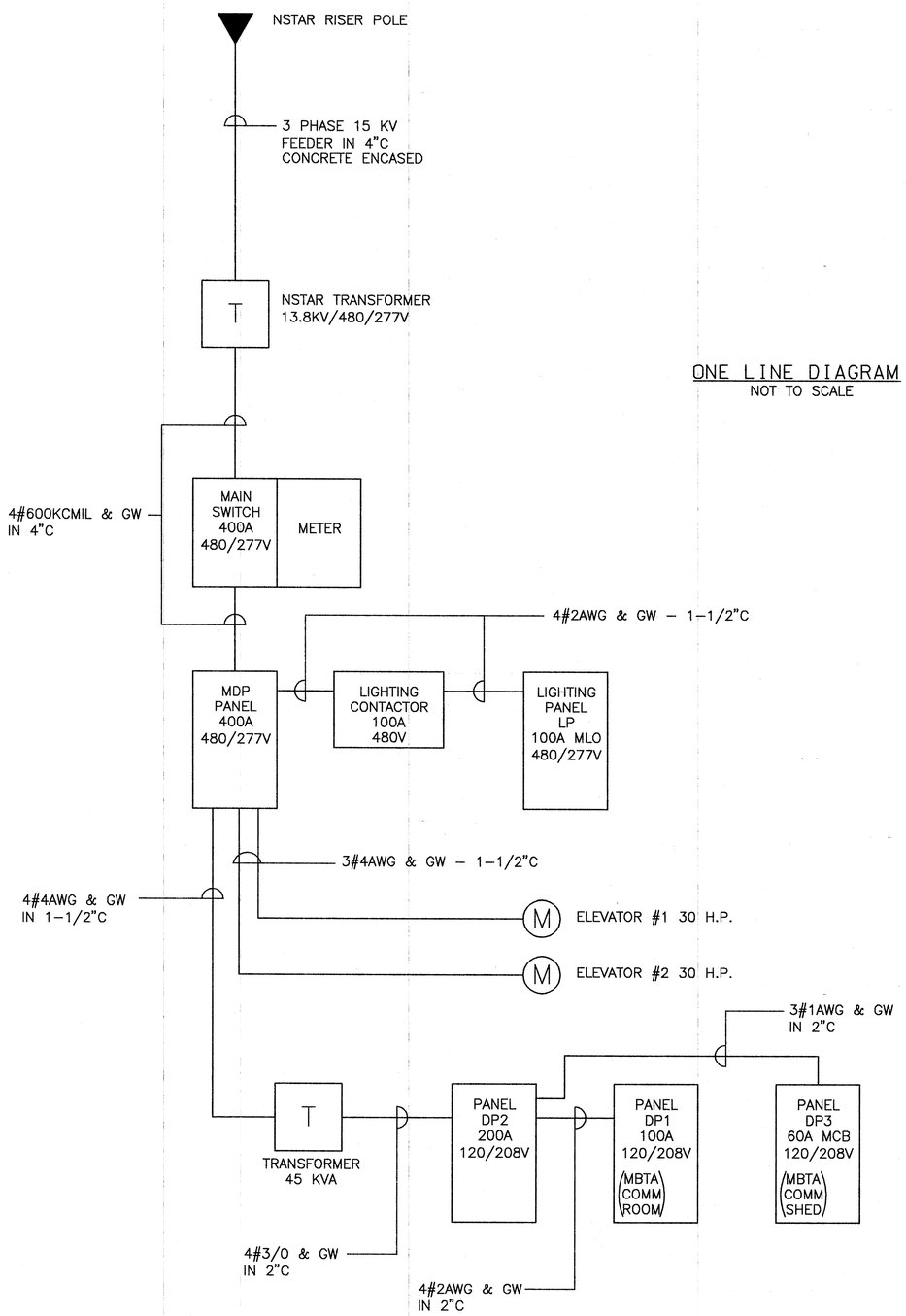

ONE LINE DIAGRAM
NOT TO SCALE

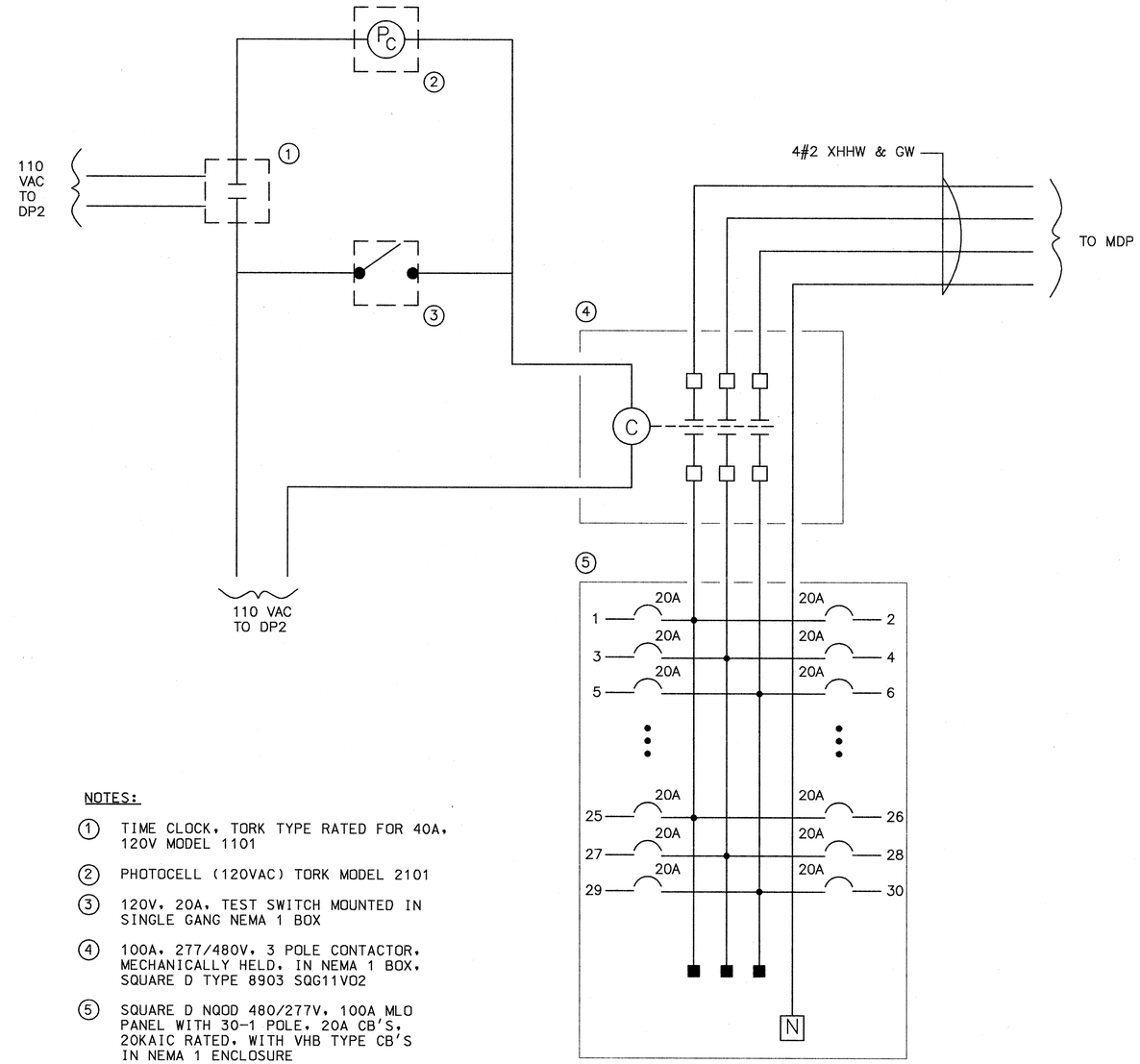

NOTES:

1. TIME CLOCK, TORK TYPE RATED FOR 40A, 120V MODEL 1101
2. PHOTOCELL (120VAC) TORK MODEL 2101
3. 120V, 20A, TEST SWITCH MOUNTED IN SINGLE GANG NEMA 1 BOX
4. 100A, 277/480V, 3 POLE CONTACTOR, MECHANICALLY HELD, IN NEMA 1 BOX, SQUARE D TYPE 8903 SQG11V02
5. SQUARE D NQOD 480/277V, 100A MLO PANEL WITH 30-1 POLE, 20A CB'S, 20KAIC RATED, WITH VHB TYPE CB'S IN NEMA 1 ENCLOSURE

LIGHTING CONTROL DIAGRAM
NOT TO SCALE

COMMONWEALTH OF MASSACHUSETTS
RAYMOND J. WALSH JR.
ELECTRICAL
No. 45241
REGISTERED PROFESSIONAL ENGINEER

MASSACHUSETTS BAY TRANSPORTATION AUTHORITY

FITCHBURG COMMUTER RAIL LINE
IMPROVEMENT PROJECT
CONTRACT NO. G67CN01

SOUTH ACTON STATION
ONE LINE DIAGRAM
AND LIGHTING CONTROL

ISSUE	DATE	DESCRIPTION	BY	CHKD.	APP.

HNTB
300 APOLLO DRIVE
CHELMSFORD, MA 01824
(978) 905-4000

PROJECT MANAGER 5/30/12 Date

MASSACHUSETTS BAY TRANSPORTATION AUTHORITY
APPROVED BY:
PROJECT MANAGER 6/30/12 Date

JACOBS
343 CONGRESS STREET
BOSTON, MA 02110
(617) 242-9222

HORIZ:	DES. BY	DR. BY	CHK. BY	PLAN NO. 168725	ISSUE
VERT:	RJW	JPH	RJW		
DATE: 5/17/12				SHEET E-23	

FILE NAME: P:\MBTA\2008\E2X37800\CAD\700CADD\702STATIONS\South Acton\Electrical\100%\ E20,21,23,24.dwg
PLOT DATE: May 17, 2012 – 12:41pm

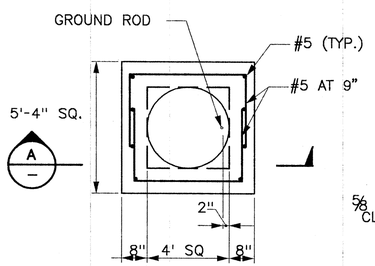

PLAN

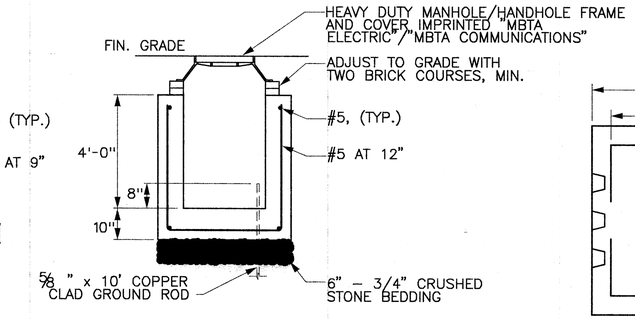

SECTION A

TYPICAL ELECTRIC/CONTROL HANDHOLE DETAIL
NOT TO SCALE

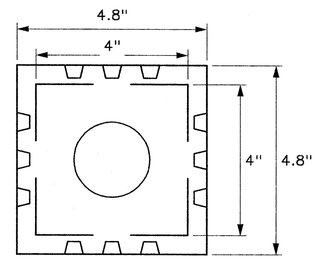

PLAN

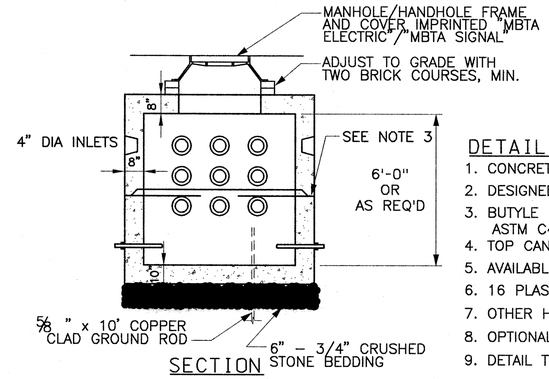

SECTION

POWER/SIGNAL MANHOLE DETAIL
NOT TO SCALE

DETAIL NOTES:

1. CONCRETE: 4,000 PSI MINIMUM AFTER 28 DAYS.
2. DESIGNED FOR H-20 LOADING.
3. BUTYLE RESIN JOINT CONFORMS TO LATEST ASTM C443 SPEC.
4. TOP CAN BE POURED SEPARATE OR MONOLITHICALLY.
5. AVAILABLE WITH OR WITHOUT PULLING EYES.
6. 16 PLASTIC PIPE SEAL INLETS PER SECTION.
7. OTHER HEIGHTS ALSO AVAILABLE.
8. OPTIONAL 30" OPENING AVAILABLE.
9. DETAIL TYPICAL FOR STRUCTURES SMH1 AND SMH2.

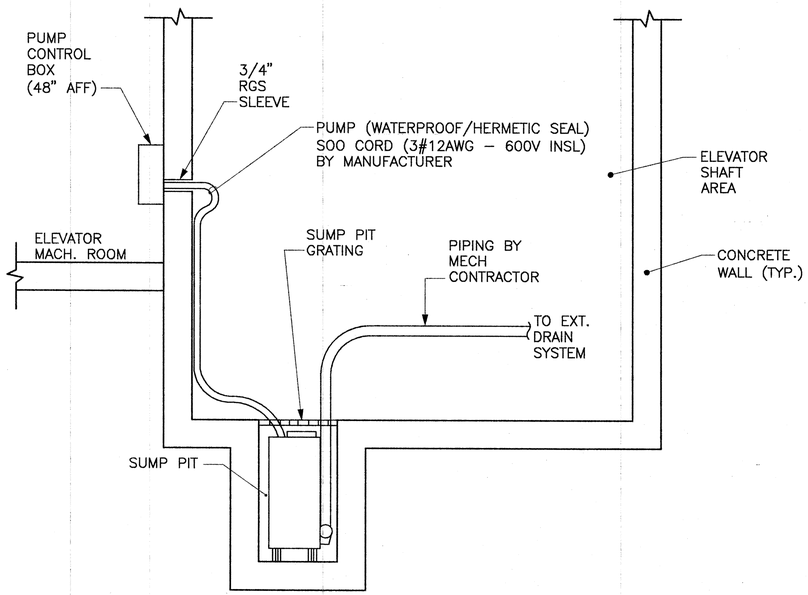

ELEVATOR SHAFT SUMP PUMP CONTROL/POWER DETAIL
NOT TO SCALE

DETAIL NOTES:

1. MODEL BASED ON STANCOR SERIES SE-40, 120VAC 5 AMPS FULL LOAD CURRENT
2. DETAIL IS TYPICAL FOR OUTBOUND/INBOUND ELEVATORS

FIRE ALARM RISER DIAGRAM

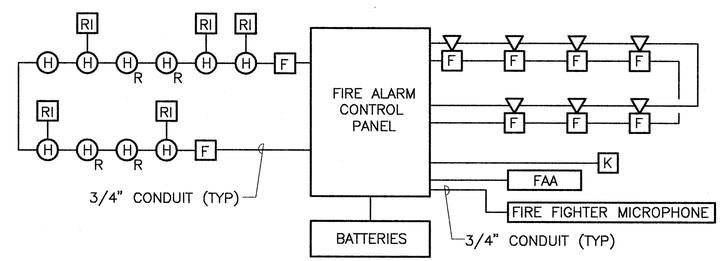

1. ALL WIRING SHALL BE RUN IN 3/4" RGS AND SURFACE MOUNTED FROM MAIN ELECTRIC ROOM – 1ST FLOOR INBOUND, 2ND FLOOR INBOUND, 2ND FLOOR OUTBOUND, 1ST FLOOR OUTBOUND. ALL WIRING SHALL BE PER SPECIFICATIONS.
2. ALL STROBES SHALL BE WEATHERPROOF AND 75 CANDELA (OR AS INDICATED IN DRAWINGS) RATED.
3. SEE SHEET E-0 FOR SYMBOL LEGEND INFORMATION.
4. SEE POWER FLOOR PLANS FOR EXACT DEVICE QUANTITIES.
5. ALL HEAT DETECTORS OR COMBO HEAT/SMOKE DETECTORS, REMOTE INDICATORS AND PULL STATIONS SHALL BE WEATHERPROOF AND RATED FOR COLD WEATHER OPERATION.

COMMONWEALTH OF MASSACHUSETTS
RAYMOND J. WALSH JR.
ELECTRICAL No. 45241
REGISTERED PROFESSIONAL ENGINEER

MASSACHUSETTS BAY TRANSPORTATION AUTHORITY

FITCHBURG COMMUTER RAIL LINE
IMPROVEMENT PROJECT
CONTRACT NO. G67CN01

SOUTH ACTON STATION
MISCELLANEOUS DETAILS

ISSUE	DATE	DESCRIPTION	BY	CHKD.	APP.

HNTB
300 APOLLO DRIVE
CHELMSFORD, MA 01824
(978) 905-4000
PROJECT MANAGER 5/30/12 Date

MASSACHUSETTS BAY TRANSPORTATION AUTHORITY
APPROVED BY:
PROJECT MANAGER 6/30/12 Date

JACOBS
343 CONGRESS STREET
BOSTON, MA 02110
(617) 242-9222

HORIZ:	DES. BY	DR. BY	CHK. BY	PLAN NO. 168726	ISSUE
VERT:	RJW	JPH	RJW		
DATE: 5/17/12				SHEET E-24	

FILE NAME: P:\MBTA\2008\E2X37800\CAD\700CADD\702STATIONS\South Acton\Electrical\100%\ E20,21,23,24.dwg
PLOT DATE: May 17, 2012 – 12:42pm

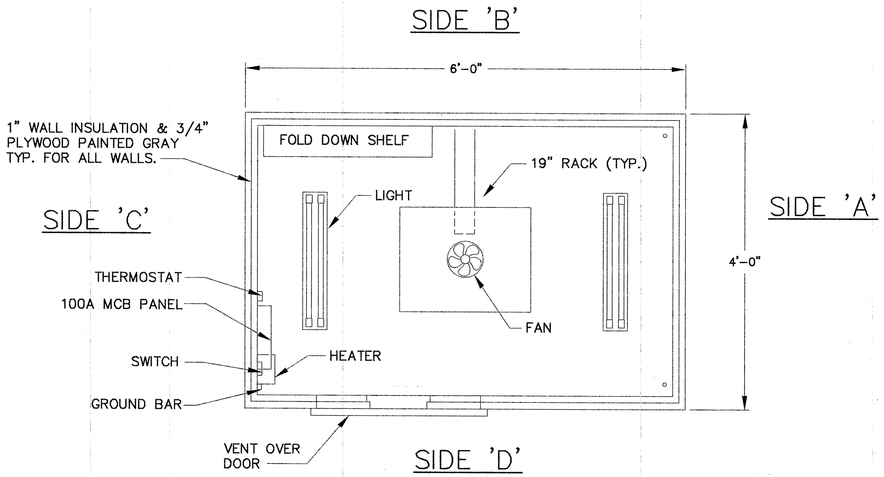

PLAN VIEW

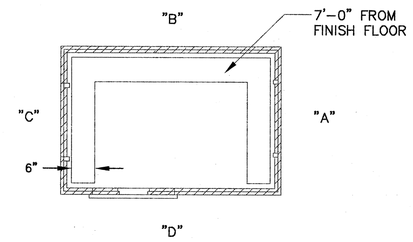

WIRE CHASE

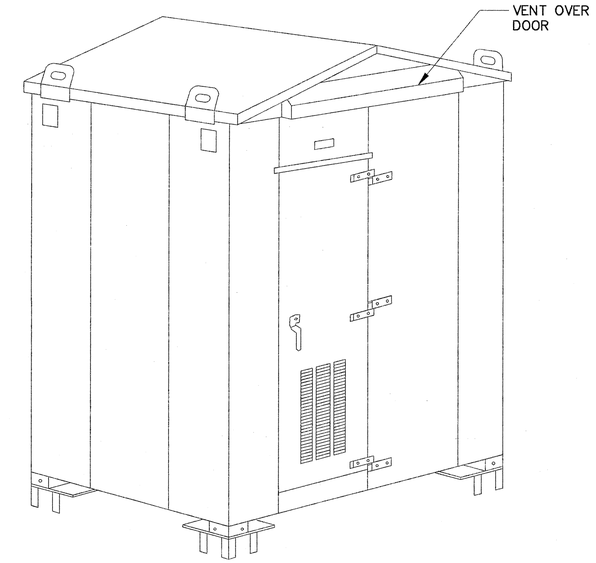

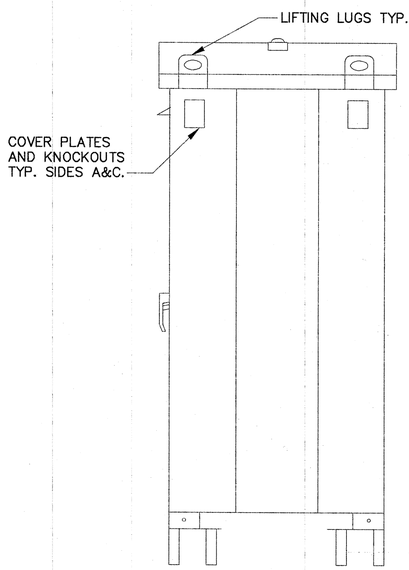

OUTSIDE VIEW
SIDE 'A'

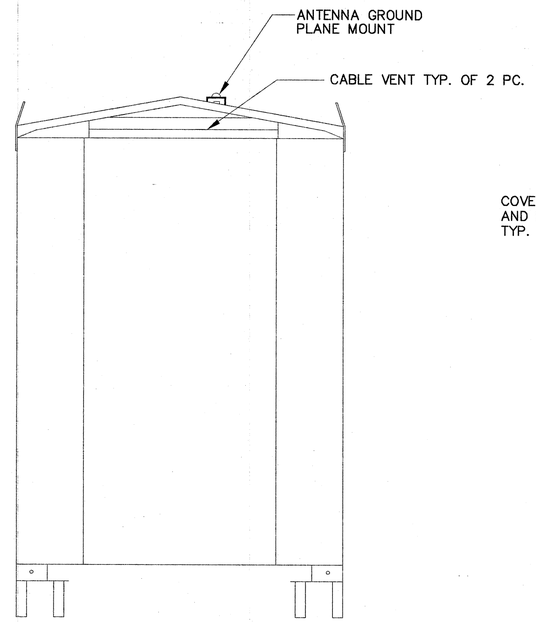

OUTSIDE VIEW
SIDE 'B'

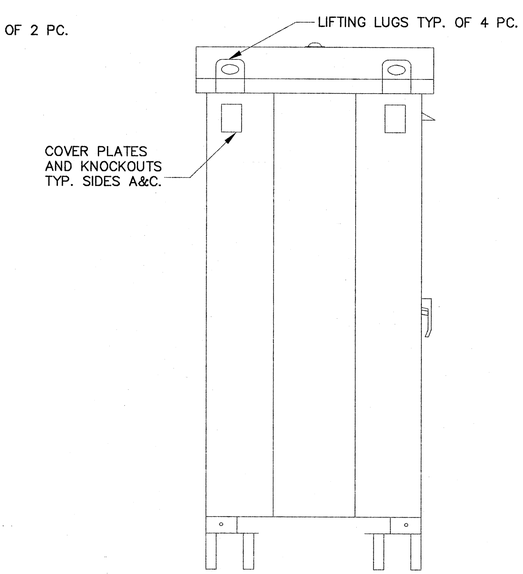

OUTSIDE VIEW
SIDE 'C'

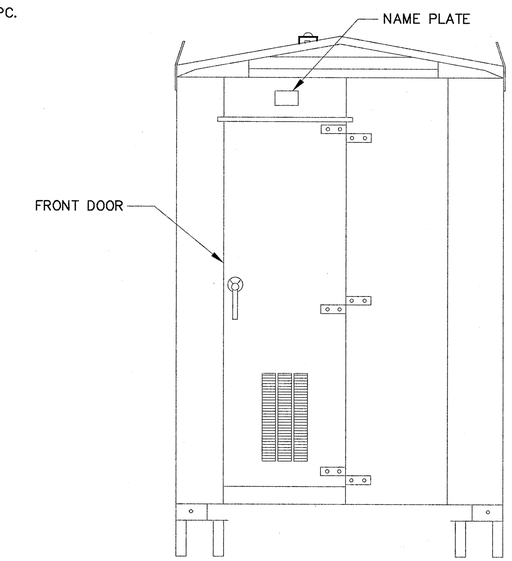

OUTSIDE VIEW
SIDE 'D'

COMMONWEALTH OF MASSACHUSETTS
RAYMOND J. WALSH JR.
ELECTRICAL
No. 45241
REGISTERED PROFESSIONAL ENGINEER

MASSACHUSETTS BAY TRANSPORTATION AUTHORITY

FITCHBURG COMMUTER RAIL LINE
IMPROVEMENT PROJECT
CONTRACT NO. G67CN01

SOUTH ACTON STATION
TYPICAL COMMUNICATIONS EQUIPMENT
SHELTER OUTSIDE VIEWS

ISSUE	DATE	DESCRIPTION	BY	CHKD.	APP.

HNTB
300 APOLLO DRIVE
CHELMSFORD, MA 01824
(978) 905-4000

PROJECT MANAGER 5/30/12 Date

MASSACHUSETTS BAY TRANSPORTATION AUTHORITY
APPROVED BY:
PROJECT MANAGER 6/30/12 Date

JACOBS
343 CONGRESS STREET
BOSTON, MA 02110
(617) 242-9222

HORIZ: AS SHOWN	DES. BY	DR. BY	CHK. BY	PLAN NO. 168730	ISSUE
VERT: NONE	MZ	KMB	DJS		
DATE: 5/17/12				SHEET COM-01	

FILE NAME: P:\MBTA\2008\E2X37800\CAD\700CADD\702STATIONS\South Acton\Communications\ COM-01.dwg
PLOT DATE: May 22, 2012 - 6:31pm

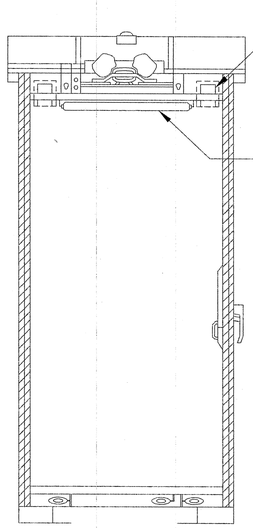

INSIDE VIEW
SIDE 'A'

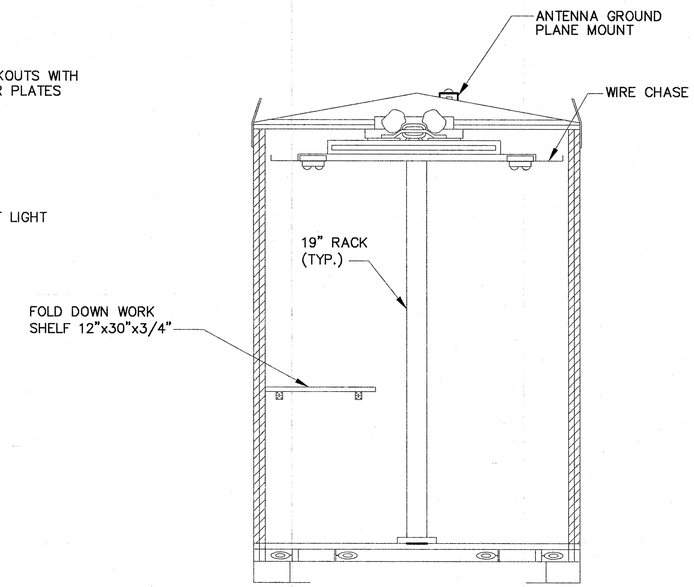

INSIDE VIEW
SIDE 'B'

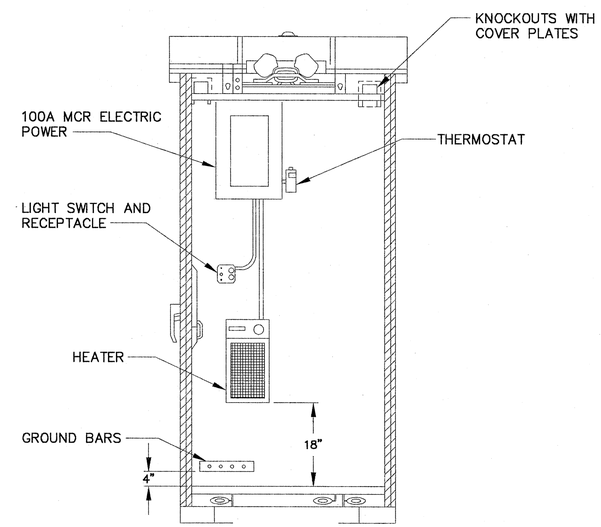

INSIDE VIEW
SIDE 'C'

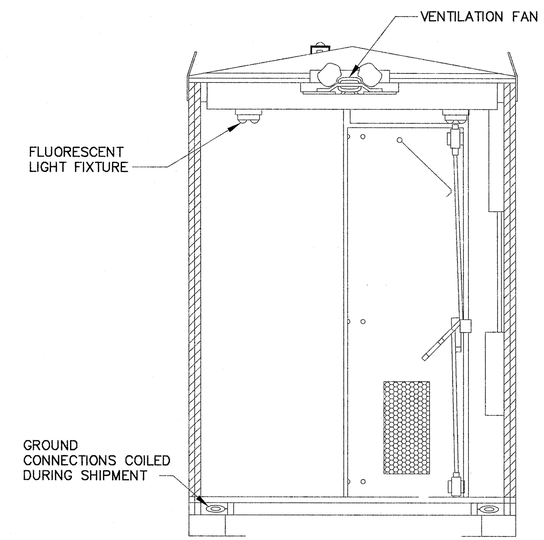

INSIDE VIEW
SIDE 'D'

COMMONWEALTH OF MASSACHUSETTS
RAYMOND J. WALSH JR.
ELECTRICAL
No. 45241
REGISTERED PROFESSIONAL ENGINEER

MASSACHUSETTS BAY TRANSPORTATION AUTHORITY

FITCHBURG COMMUTER RAIL LINE
IMPROVEMENT PROJECT
CONTRACT NO. G67CN01

SOUTH ACTON STATION
TYPICAL COMMUNICATIONS EQUIPMENT
SHELTER INSIDE VIEWS

ISSUE	DATE	DESCRIPTION	BY	CHKD.	APP.

HNTB
300 APOLLO DRIVE
CHELMSFORD, MA 01824
(978) 905-4000

PROJECT MANAGER 5/30/12 Date

MASSACHUSETTS BAY TRANSPORTATION AUTHORITY
APPROVED BY: 6/30/12
PROJECT MANAGER Date

JACOBS
343 CONGRESS STREET
BOSTON, MA 02110
(617) 242-9222

HORIZ: AS SHOWN
VERT: NONE
DATE: 5/17/12

DES. BY	DR. BY	CHK. BY
MZ	KMB	DJS

PLAN NO. 168731
SHEET COM-02
ISSUE

FILE NAME: P:\MBTA\2008\E2X3780\CAD\700CADD\702STATIONS\South Acton\Communications\ COM-02.dwg
PLOT DATE: May 22, 2012 – 6:55pm

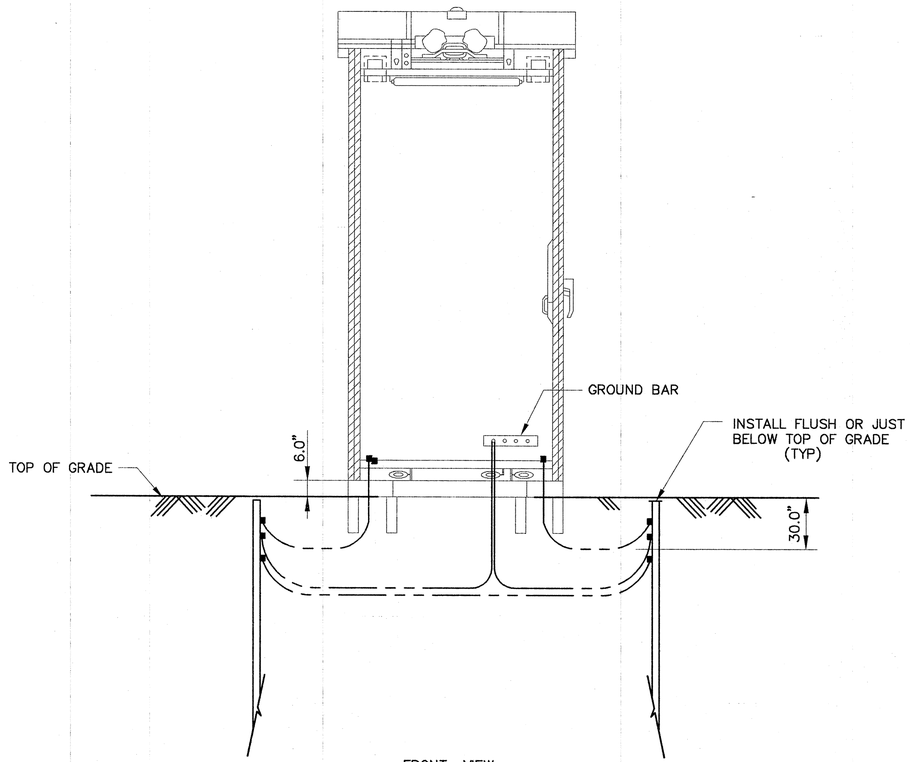

FRONT VIEW

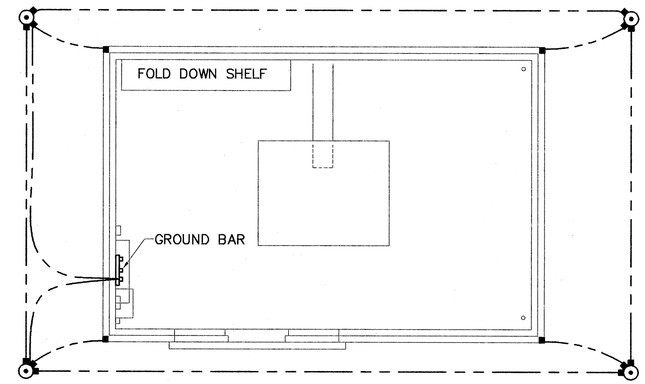

PLAN VIEW

LEGEND

- ⊙ 5/8" DIAMETER X 10' LONG COPPER CLAD GROUND ROD
- ▪ EXOTHERMIC WELD
- — — — — # 6 BARE COPPER GROUND WIRE

NOTES:

1. TO INSTALL THE SHELTER IN ACCORDANCE WITH MANUFACTURE'S INSTALLATION INSTRUCTIONS
2. TO VERIFY FINAL ORIENTATION AND PLACEMENT OF THE SHELTER PRIOR TO PIER INSTALLATION.
3. THE FLOOR OF THE SHELTER SHALL BE 6" ABOVE FINISHED GRADE.
4. TO INSTALL CABLE ENTRANCE AS REQUIRED FOR POWER, FIBER, AND GROUNDS.

COMMONWEALTH OF MASSACHUSETTS
RAYMOND J. WALSH JR.
ELECTRICAL
No. 45241
REGISTERED PROFESSIONAL ENGINEER

MASSACHUSETTS BAY TRANSPORTATION AUTHORITY

FITCHBURG COMMUTER RAIL LINE
IMPROVEMENT PROJECT
CONTRACT NO. G67CN01

SOUTH ACTON STATION
TYPICAL COMMUNICATIONS EQUIPMENT
SHELTER GROUNDING PLAN

ISSUE	DATE	DESCRIPTION	BY	CHKD.	APP.

HNTB
300 APOLLO DRIVE
CHELMSFORD, MA 01824
(978) 905-4000

PROJECT MANAGER 5/30/12 Date

MASSACHUSETTS BAY TRANSPORTATION AUTHORITY
APPROVED BY:
PROJECT MANAGER 6/30/12 Date

JACOBS
343 CONGRESS STREET
BOSTON, MA 02110
(617) 242-9222

HORIZ: AS SHOWN	DES. BY	DR. BY	CHK. BY
VERT: NONE	MZ	KMB	DJS
DATE: 5/17/12			

PLAN NO. 168732
SHEET COM-03
ISSUE

FILE NAME: P:\MBTA\2008\E2X37800\CAD\700CADD\702STATIONS\South Acton\Communications\ COM-03.dwg
PLOT DATE: May 22, 2012 - 6:57pm

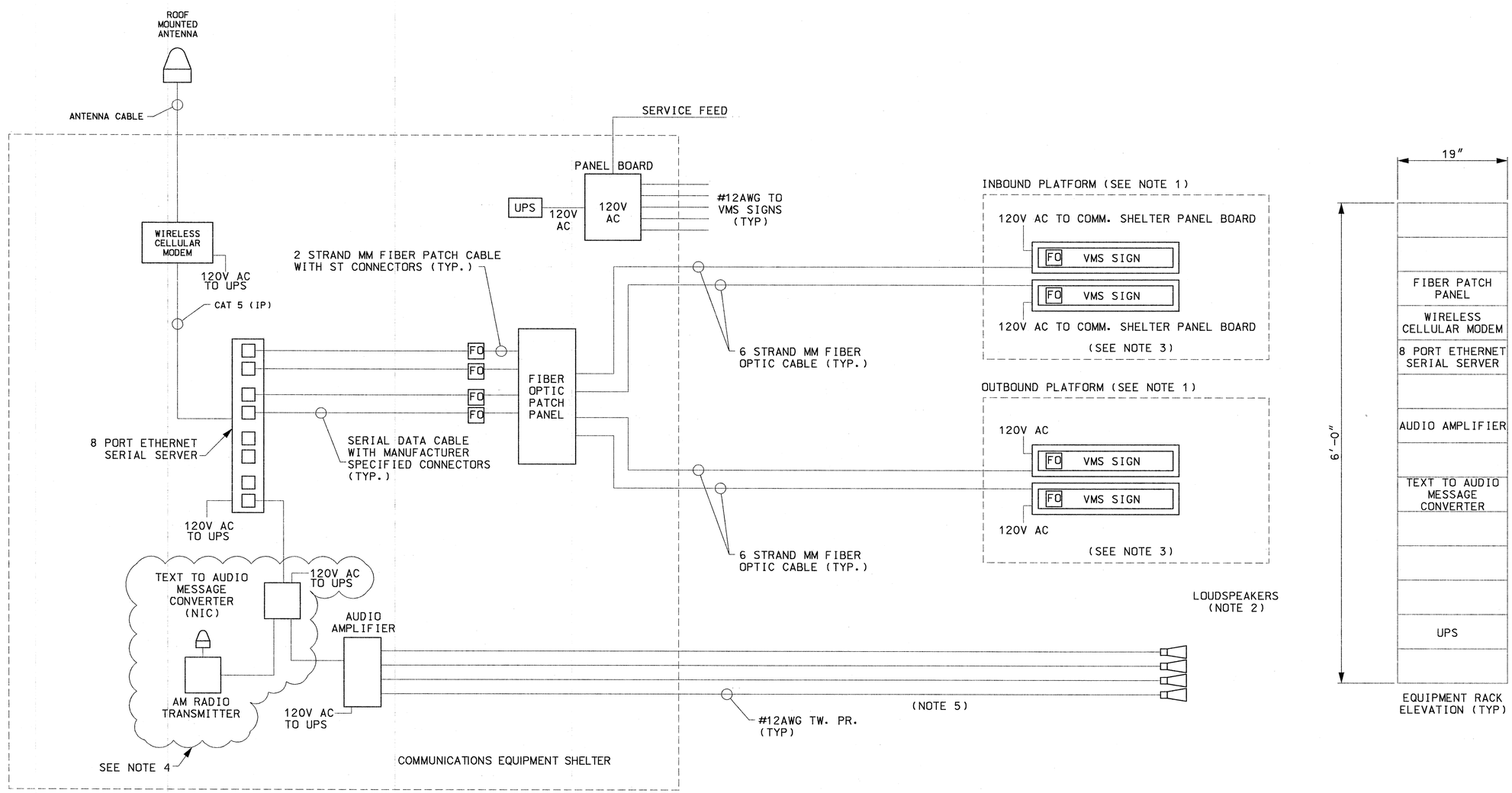

LEGEND:

FO FIBER OPTIC MINI-MODEM

MM MULTIMODE

NOTES:

1. AT EACH PLATFORM VMS SIGN LOCATION THE SIGN SHALL BE DOUBLE-SIDED OR TWO SINGLE-SIDED VMS SIGNS INSTALLED BACK TO BACK.
2. TWO LOUDSPEAKERS ARE TO BE LOCATED AT EACH VMS SIGN PLATFORM LOCATION.
3. EACH VMS SHALL INCLUDE A SMALL PATCH PANEL FOR TERMINATING AND PATCHING THE 6 STRAND MM FIBER OPTIC CABLE. FINAL LOCATION TO BE APPROVED BY THE ENGINEER.
4. TEXT TO AUDIO MESSAGE CONVERTER IS TO BE PROVIDED BY THE RAILROAD.
5. LOUDSPEAKER CABLING SHOWN DIAGRAMMATICALLY. ACTUAL AUDIO DISTRIBUTION CONFIGURATION MAY VARY.
6. ALL EXTERNAL CABLES SHALL BE IN 1" RGS CONDUIT.
7. REFER TO EQUIPMENT RACK ELEVATION.

COMMONWEALTH OF MASSACHUSETTS
RAYMOND J. WALSH JR.
ELECTRICAL
No. 43271
REGISTERED PROFESSIONAL ENGINEER

ISSUE	DATE	DESCRIPTION	BY	CHKD.	APP.

JACOBS 343 CONGRESS STREET BOSTON, MA 02110 (617) 242-9222

MASSACHUSETTS BAY TRANSPORTATION AUTHORITY

FITCHBURG COMMUTER RAIL LINE
IMPROVEMENT PROJECT
CONTRACT NO. G67CN01

SOUTH ACTON STATION VARIABLE MESSAGE SIGN SYSTEM DIAGRAM

HNTB 300 APOLLO DRIVE CHELMSFORD, MA 01824 (978) 905-4000

PROJECT MANAGER 5/30/12 Date

MASSACHUSETTS BAY TRANSPORTATION AUTHORITY
APPROVED BY:
PROJECT MANAGER 6/30/12 Date

HORIZ: AS SHOWN	DES. BY	DR. BY	CHK. BY	PLAN NO. 168734	ISSUE
VERT: NONE	DR	AJL	DR		
DATE: 5/17/12				SHEET COM-05	

FILE NAME: P:\MBTA\2008\E2X37800\CAD\700CADD\702STATIONS\South Acton\Communications\ COM-05.dwg
PLOT DATE: May 22, 2012 - 6:59pm

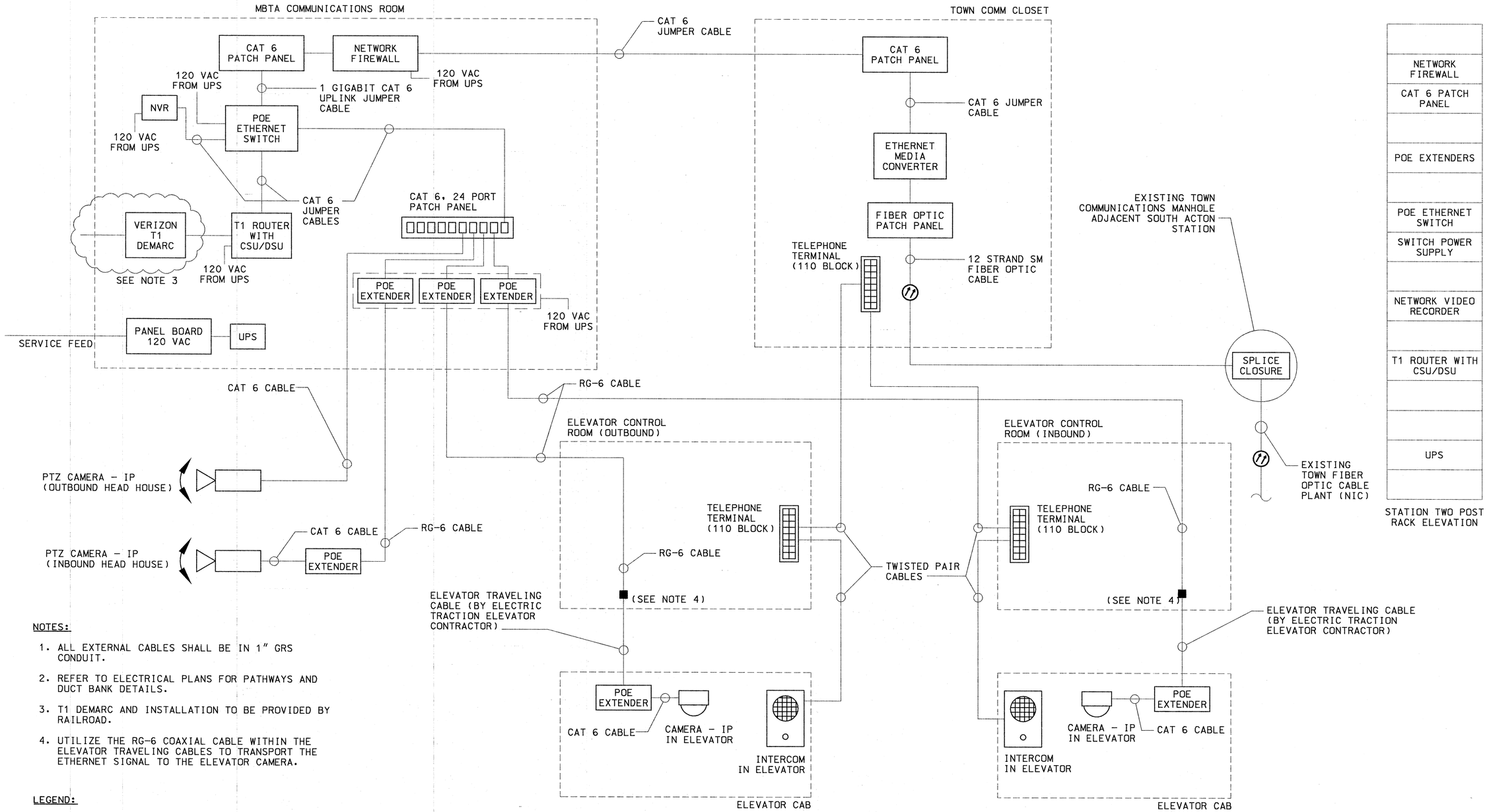

NOTES:

1. ALL EXTERNAL CABLES SHALL BE IN 1" GRS CONDUIT.
2. REFER TO ELECTRICAL PLANS FOR PATHWAYS AND DUCT BANK DETAILS.
3. T1 DEMARC AND INSTALLATION TO BE PROVIDED BY RAILROAD.
4. UTILIZE THE RG-6 COAXIAL CABLE WITHIN THE ELEVATOR TRAVELING CABLES TO TRANSPORT THE ETHERNET SIGNAL TO THE ELEVATOR CAMERA.

LEGEND:

POE EXTENDER	POWER OVER ETHERNET EXTENDER - COAX TYPE
(//)	FIBER OPTIC CABLE
■	BNC-BNC BARREL CONNECTOR

COMMUNICATIONS SYSTEM DIAGRAM

COMMONWEALTH OF MASSACHUSETTS
RAYMOND J. WALSH JR.
ELECTRICAL No. 45241
REGISTERED PROFESSIONAL ENGINEER

MASSACHUSETTS BAY TRANSPORTATION AUTHORITY

FITCHBURG COMMUTER RAIL LINE IMPROVEMENT PROJECT
CONTRACT NO. G67CN01

SOUTH ACTON STATION COMMUNICATIONS SYSTEM DIAGRAM

ISSUE	DATE	DESCRIPTION	BY	CHKD.	APP.

HNTB
300 APOLLO DRIVE
CHELMSFORD, MA 01824
(978) 905-4000
PROJECT MANAGER 5/30/12 Date

MASSACHUSETTS BAY TRANSPORTATION AUTHORITY
APPROVED BY: 6/30/12
PROJECT MANAGER Date

JACOBS
343 CONGRESS STREET
BOSTON, MA 02110
(617) 242-9222

	DES. BY	DR. BY	CHK. BY
HORIZ: AS SHOWN	DR	AJL	DR
VERT: NONE			
DATE: 5/17/12			

PLAN NO. 168735
SHEET COM-06
ISSUE

FILE NAME: P:\MBTA\2008\E2X37800\CAD\700CADD\702STATIONS\South Acton\Communications\ COM-06.dwg
PLOT DATE: May 22, 2012 - 7:02pm

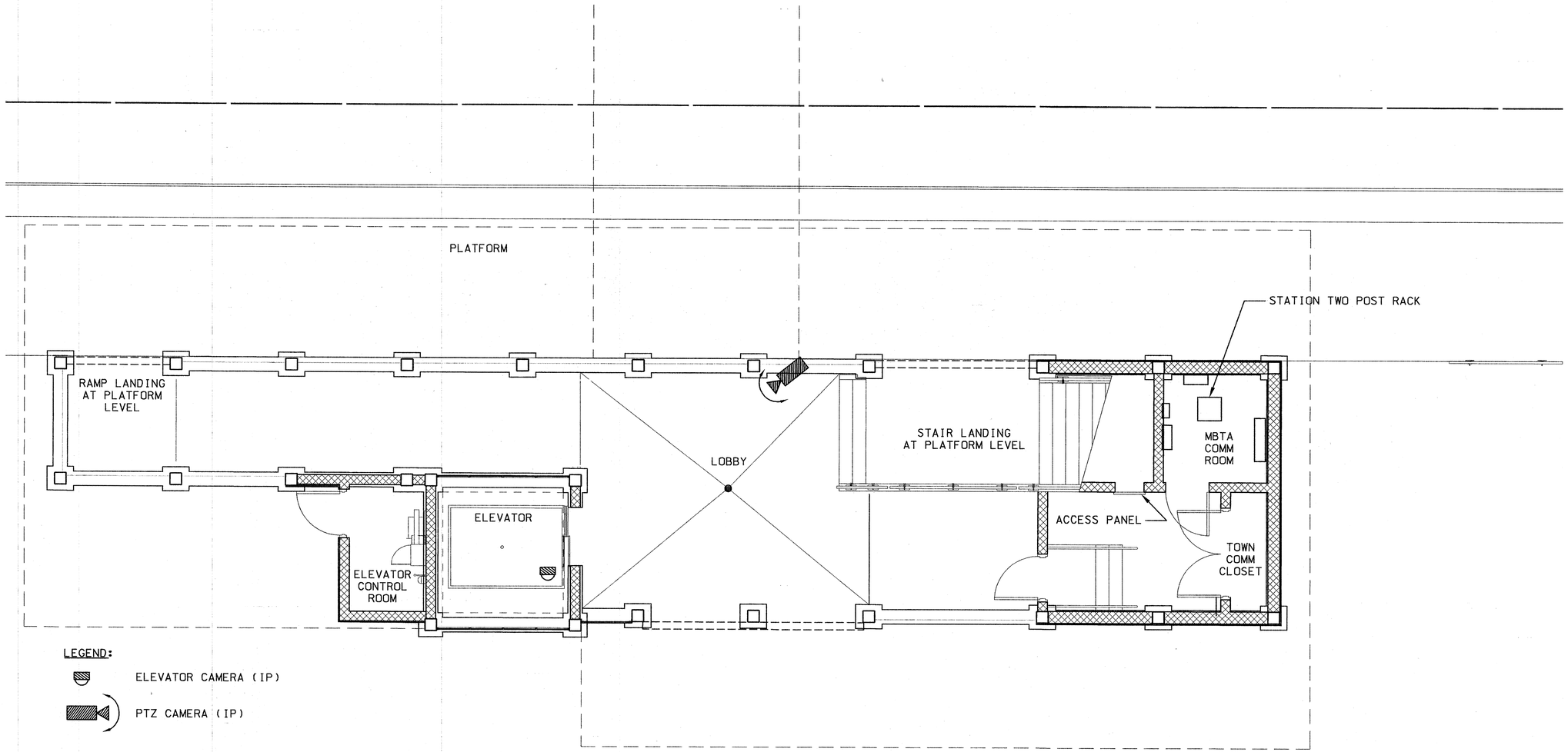

LEGEND:

ELEVATOR CAMERA (IP)

PTZ CAMERA (IP)

PLAN

0 2 4 8

SCALE: 1/4" = 1'-0"

COMMONWEALTH OF MASSACHUSETTS
RAYMOND J. WALSH JR.
ELECTRICAL
No. 45241
REGISTERED PROFESSIONAL ENGINEER

MASSACHUSETTS BAY TRANSPORTATION AUTHORITY

FITCHBURG COMMUTER RAIL LINE
IMPROVEMENT PROJECT
CONTRACT NO. G67CN01

SOUTH ACTON STATION
FIRST FLOOR – OUTBOUND HEAD HOUSE
CCTV PLAN

ISSUE	DATE	DESCRIPTION	BY	CHKD.	APP.

HNTB
300 APOLLO DRIVE
CHELMSFORD, MA 01824
(978) 905-4000

PROJECT MANAGER 5/30/12 Date

MASSACHUSETTS BAY TRANSPORTATION AUTHORITY
APPROVED BY:
PROJECT MANAGER 6/29/12 Date

JACOBS
343 CONGRESS STREET
BOSTON, MA 02110
(617) 242-9222

HORIZ: AS SHOWN	DES. BY	DR. BY	CHK. BY	PLAN NO. 168736	ISSUE
VERT: NONE	DR	AJL	DR		
DATE: 5/17/12				SHEET COM-07	

FILE NAME: P:\MBTA\2008\E2X37800\CAD\700CADD\702STATIONS\South Acton\Communications\ COM-07.dwg
PLOT DATE: May 22, 2012 - 7:12pm

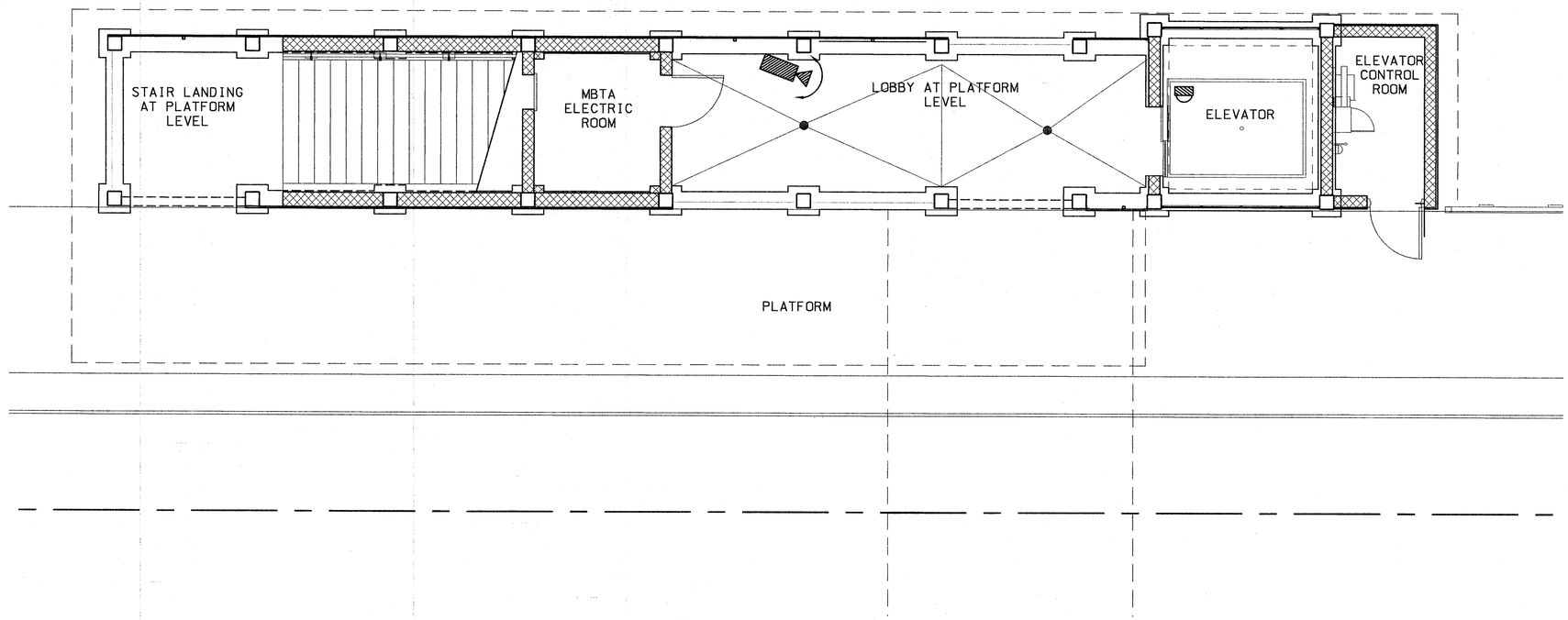

LEGEND:

ELEVATOR CAMERA (IP)

PTZ CAMERA (IP)

PLAN

0 2 4 8

SCALE: 1/4" = 1'-0"

COMMONWEALTH OF MASSACHUSETTS
RAYMOND J. WALSH JR.
ELECTRICAL
No. 45241
REGISTERED
PROFESSIONAL ENGINEER

MASSACHUSETTS BAY TRANSPORTATION AUTHORITY

FITCHBURG COMMUTER RAIL LINE
IMPROVEMENT PROJECT
CONTRACT NO. G67CN01

SOUTH ACTON STATION
FIRST FLOOR – INBOUND HEAD HOUSE
CCTV PLAN

ISSUE	DATE	DESCRIPTION	BY	CHKD.	APP.

HNTB
300 APOLLO DRIVE
CHELMSFORD, MA 01824
(978) 905-4000

PROJECT MANAGER Date

MASSACHUSETTS BAY TRANSPORTATION AUTHORITY

APPROVED BY: 6/30/12

PROJECT MANAGER Date

JACOBS
343 CONGRESS STREET
BOSTON, MA 02110
(617) 242-6222

HORIZ: AS SHOWN	DES. BY	DR. BY	CHK. BY	PLAN NO. 168737	ISSUE
VERT: NONE	DR	AJL	DR		
DATE: 5/17/12				SHEET COM-08	

FILE NAME: P:\MBTA\2008\E2X37800\CAD\700CADD\702STATIONS\South Acton\Communications\ COM-08.dwg
PLOT DATE: May 22, 2012 – 7:13pm