PROFILE AND DETAILS
NOT TO SCALE

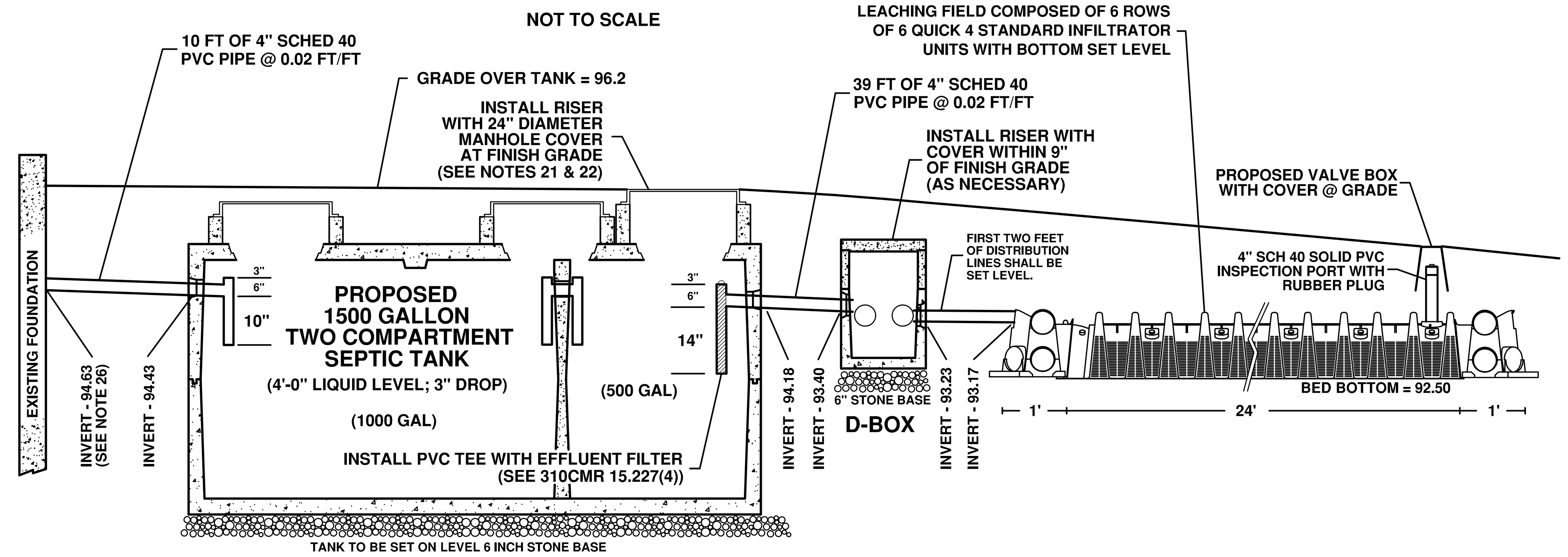

POLYLINER DETAIL
NOT TO SCALE

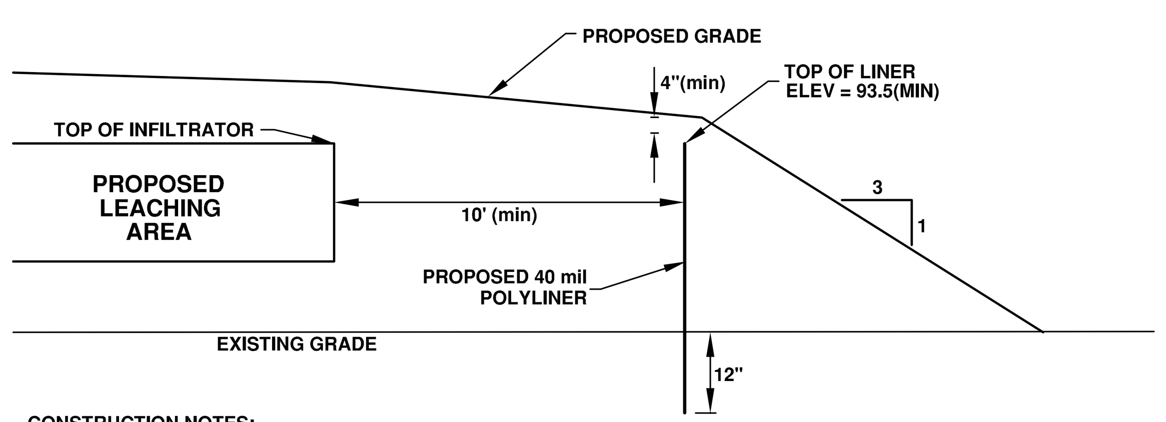

CONSTRUCTION NOTES:

1. POLYLINER IS TO BE KEYED A MINIMUM OF 1 FOOT INTO THE EXISTING MATERIAL.
2. POLYLINER IS TO BE A MINIMUM OF 40 mil IN THICKNESS. LINER CAN BE OBTAINED FROM GRAVES CONSTRUCTION IN LITTLETON, MA (978) 486-3563.
3. POLY LINER IS TO BE ONE CONTINUOUS LENGTH WITH NO SEAMS.
4. BACKFILL AROUND POLYLINER IS TO BE CLEAN SAND WITH NO ROCKS LARGER THAN 2" IN DIAMETER.

PLOT PLAN
1" = 60'

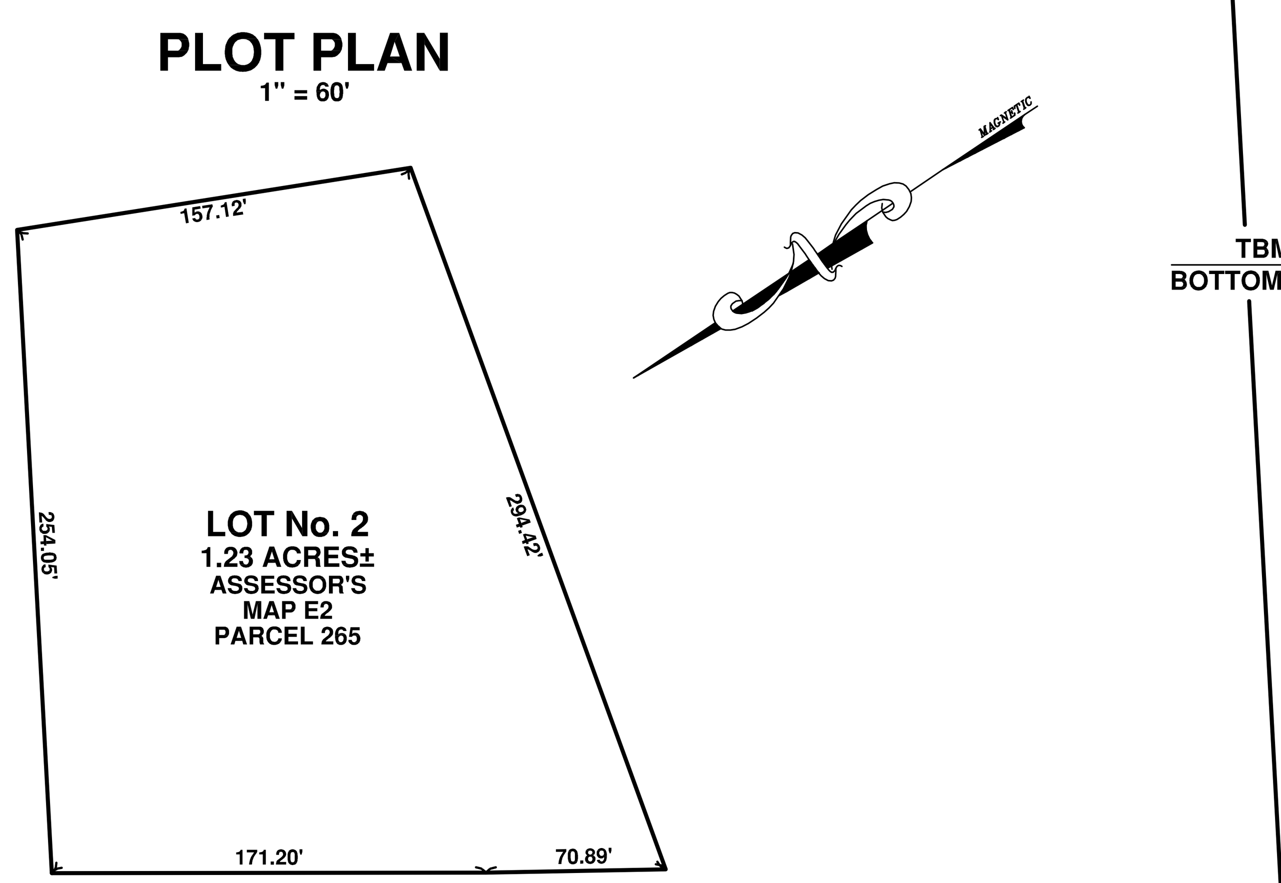

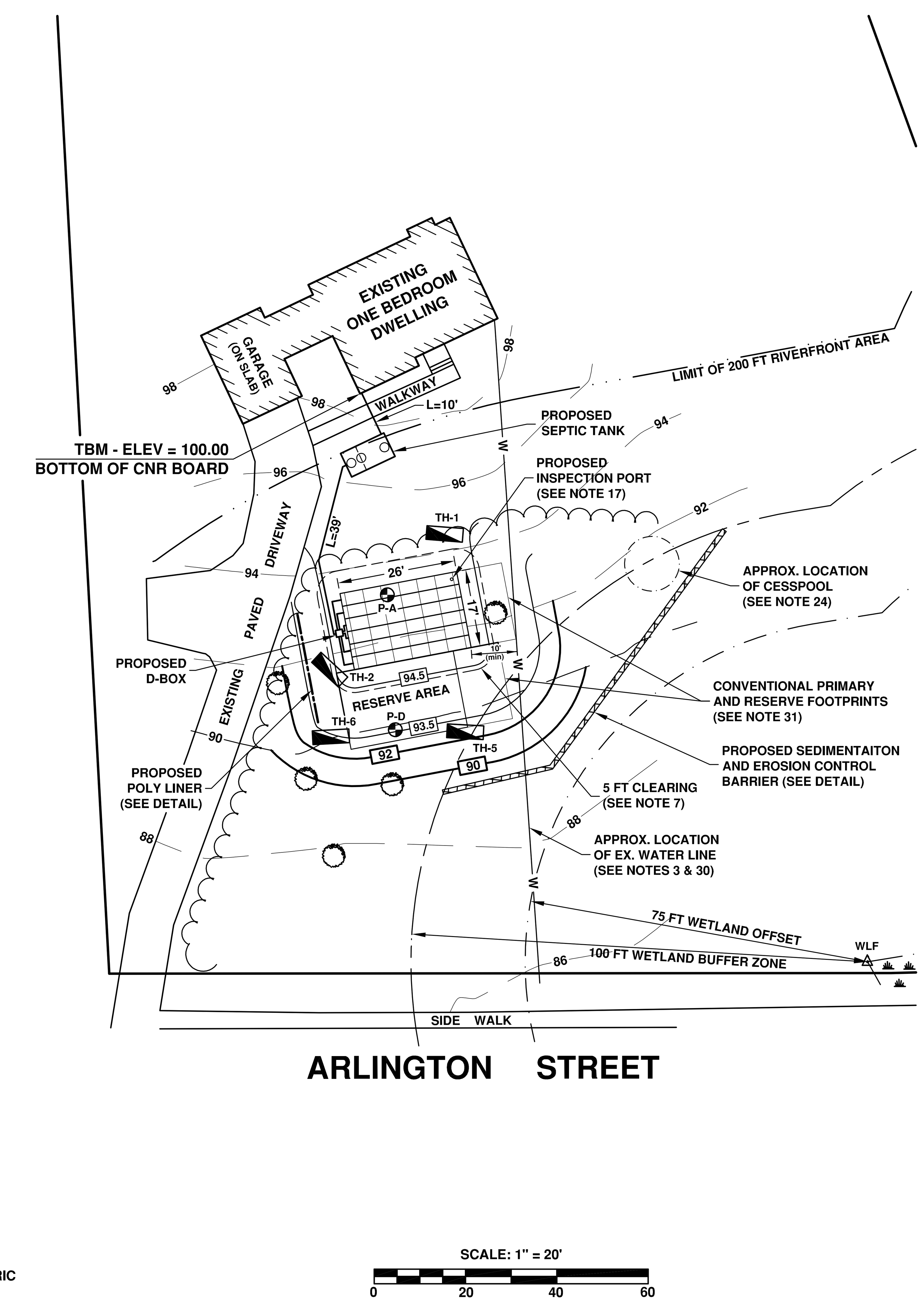

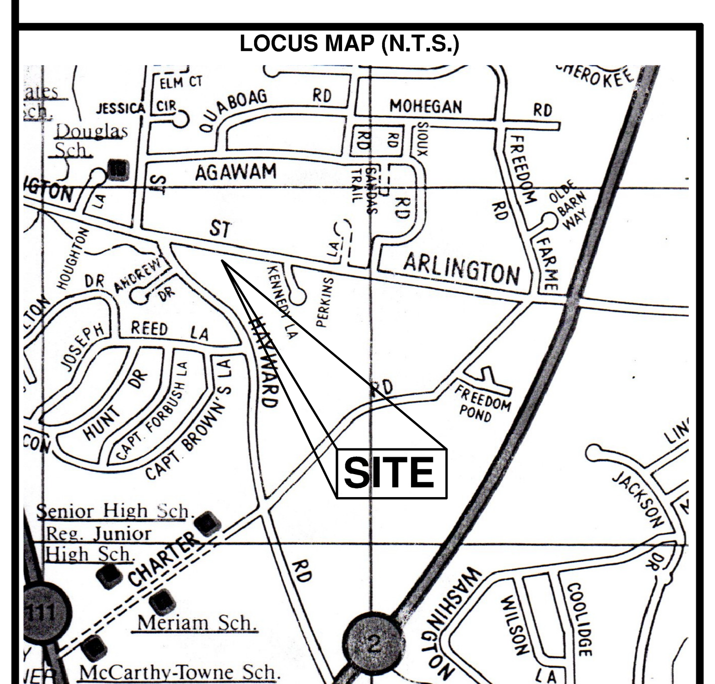

LEGEND

(T.B.R.)	TO BE REMOVED
	EXISTING STUMP
	EXISTING TREE
	LIGHT POST
80.00	EXISTING SPOT GRADE
80.00	PROPOSED SPOT GRADE
	SOIL PROFILE TEST
	PERCOLATION TEST
— — 80 — —	EXISTING CONTOUR
—— 80 ——	PROPOSED CONTOUR
—— W ——	PROPOSED WATER LINE
—— G ——	EXISTING GAS LINE
—— E ——	EXISTING BURIED ELECTRIC
	BRUSHLINE/TREELINE

CROSS SECTION
NOT TO SCALE

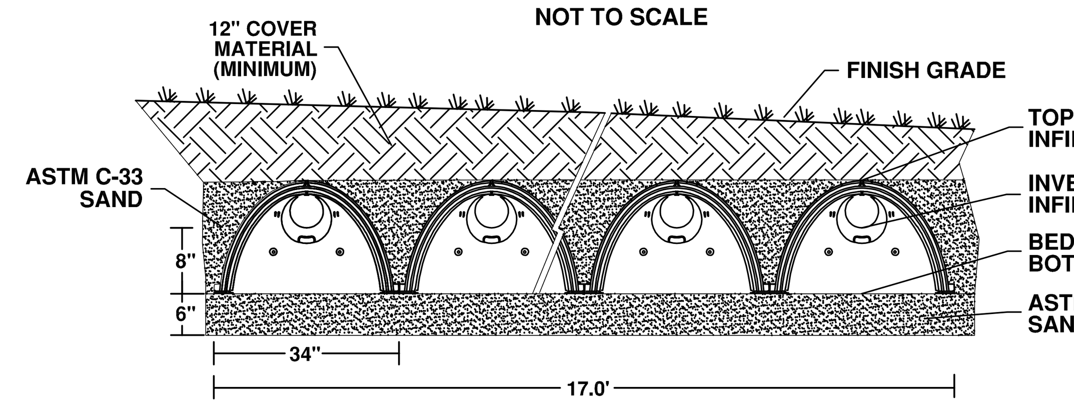

INSTALL 6 ROWS OF 6 QUICK 4 STANDARD INFILTRATORS

SCHEDULE OF ELEVATIONS			
TOP OF FOUNDATION	100.0±	INFILTRATOR SYSTEM	
OUT OF FOUNDATION	94.63	FINISH GRADE	94.50
IN SEPTIC TANK	94.43	TOP OF INFILTRATOR	93.50
OUT SEPTIC TANK	94.18	INVERT @ INFILTRATOR	93.17
IN DISTRIBUTION BOX	93.40	BED BOTTOM	92.50
OUT DISTRIBUTION BOX	93.23		

CONVENTIONAL SYSTEM SIZING

TITLE 5 DESIGN CAPACITY PROVIDED:
3 BEDROOMS X 110 GAL/BEDROOM = 330 GAL/DAY

MINIMUM LEACHING ARA REQUIRED BY ACTON BOARD OF HEALTH:
600 SQUARE FEET (EFFECTIVE AREA)

PROVIDED:
PERCOLATION RATE: 10 MINUTES/INCH
APPLICATION RATE: 0.60 GAL/SF

TOTAL LEACHING AREA: 17' W X 36'L = 612 SF
TOTAL VOL APPLIED/DAY: 612 SF X 0.60 GAL/SF = 367 GAL

SEDIMENT AND EROSION CONTROL DETAIL
NOT TO SCALE

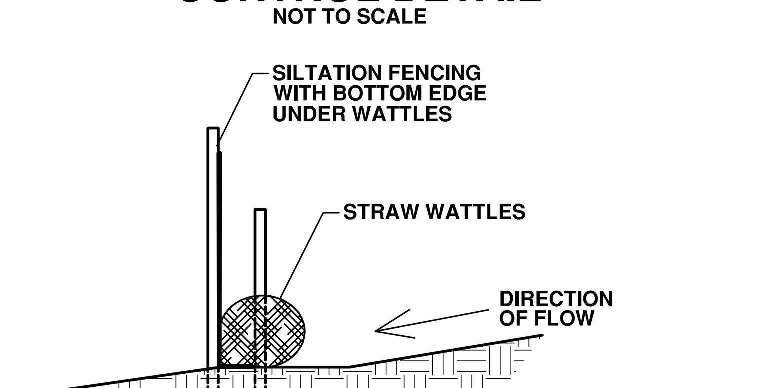

SYSTEM CALCULATIONS

TITLE 5 DESIGN CAPACITY PROVIDED:
3 BEDROOMS X 110 GAL/BEDROOM = 330 GAL/DAY

MINIMUM LEACHING AREA REQUIRED BY ACTON BOARD OF HEALTH:
600 SQUARE FEET (EFFECTIVE AREA)

PROVIDED:
PERCOLATION RATE: 10 MINUTES/INCH
APPLICATION RATE: 0.60 GAL/SF

TOTAL LEACHING AREA: 6 X 26'L X 2.83'W = 441 SF
EFFECTIVE LEACHING AREA = 441 SF X 1.67 = 736 SF

TOTAL VOL APPLIED/DAY: 736 SF X 0.60 GAL/SF = 441 GAL

APPROVED CAPACITY: 3 BEDROOM

SEPTIC TANK(S) SIZING:
200% X 330 GPD = 660 GALLONS
INSTALL NEW 1500 GALLON TWO COMPARTMENT SEPTIC TANK

SOIL PROFILE DATA

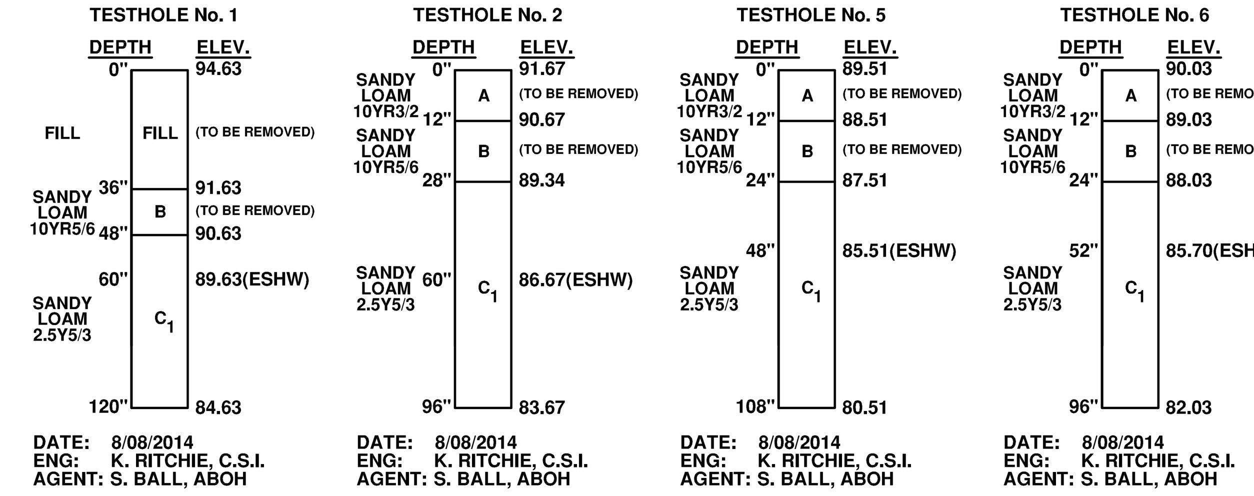

THE SOIL EVALUATOR FOR THIS SITE IS KEVIN RITCHIE. HE PASSED THE MA SOIL EVALUATOR EXAM SPRING 1996.

PERCOLATION TEST DATA

PERC No.	DATE:	DEPTH:	RATE:
A	8/08/2014	60 INCHES	8 MPI
D	8/08/2014	60 INCHES	10 MPI

PERCOLATION TEST(S) PERFORMED BY: KEVIN RITCHIE, CSI
WITNESSED BY: SHERYL BALL, ACTON BOH

NOTES AND SPECIFICATIONS

1. BOUNDARY LINE INFORMATION TAKEN FROM A "SUBDIVISION PLAN OF LAND IN ACTON" BY HORACE F. TUTTLE, SURVEYOR, DATED MARCH 16, 1955, RECORDED IN THE M.S.D.R.D. LAND REGISTRATION OFFICE AS PLAN No. 20099D.
2. TOPOGRAPHICAL INFORMATION TAKEN FROM A FIELD SURVEY PERFORMED BY THIS OFFICE.
3. CONTRACTOR SHALL NOTIFY DIGSAFE (888) 344-7233 AT LEAST 72 HOURS PRIOR TO INITIATING WORK. IT SHALL BE THE RESPONSIBILTY OF THE CONTRACTOR TO LOCATE ANY UTILITIES NOT DELINEATED BY DIGSAFE.
4. CONTRACTOR SHALL NOTIFY THIS OFFICE 24 TO 48 HOURS PRIOR TO REQUIRED CONSTRUCTION INSPECTIONS.
5. IT SHALL BE THE RESPONSIBILITY OF THE CONTRACTOR TO VERIFY ALL EXISTING SITE CONDITIONS AND ELEVATIONS PRIOR TO INITIATING CONSTRUCTION. ANY DISCREPANCIES SHALL BE REPORTED TO THE ENGINEER OF RECORD PRIOR TO THE ONSET OF CONSTRUCTION.
6. CONTAMINATED SOIL WITHIN THE VICINITY OF THE PROPOSED LEACHING AREA SHOULD BE REMOVED BY THE CONTRACTOR. LOCATION OF EXISTING LEACHING AREA SHOWN HEREON IS APPROXIMATE.
7. WHERE FILL IS REQUIRED TO REPLACE UNSUITABLE OR IMPERVIOUS MATERIAL, THE EXCAVATION OF THE UNSUITABLE MATERIAL SHALL EXTEND A MINIMUM OF 5 FEET LATERALLY IN ALL DIRECTIONS BEYOND THE OUTER PERIMETER OF THE SOIL ABSORPTION SYSTEM TO A DEPTH OF NATURALLY OCCURRING PERVIOUS MATERIAL.
8. FILL MATERIAL SHALL MEET THE SPECIFICATIONS ESTABLISHED IN 310 CMR 15.255.
9. EXISTING DWELLING IS SERVICED BY A MUNICIPAL WATER SUPPLY.
10. THIS SYSTEM IS NOT DESIGNED TO ACCOMMODATE GARBAGE DISPOSAL UNITS.
11. RETURN WATER FROM HOME WATER FILTRATION SYSTEM SHALL NOT BE PIPED INTO THE SEPTIC SYSTEM.
12. TANKS AND DISTRIBUTION BOX SHOWN HEREON ARE GRAPHICAL REPRESENTATIONS OF THE CONCRETE STRUCTURES REQUIRED, AND SHOULD NOT BE CONSIDERED CONSTRUCTION DRAWINGS. MANUFACTURER OF TANKS AND BOXES SHALL BE APPROVED BY THE ENGINEER OF RECORD AND THE BOARD OF HEALTH.
13. ANY ALTERATION OF WETLANDS OR DISTURBANCE WITHIN THE 100 FOOT BUFFER ZONE SHALL REQUIRE A FILING WITH THE LOCAL CONSERVATION COMMISSION AND THE DEPARTMENT OF ENVIRONMENTAL PROTECTION.
14. THIS PLAN MAY ONLY BE REVISED WITH THE CONSENT OF THE LOCAL BOARD OF HEALTH AND THE ENGINEER OF RECORD.
15. BASED ON AVAILABLE RECORD INFORMATION AND A VISUAL SITE INSPECTION, ALL WELLS WITHIN 150 FEET OF THE PROPOSED LEACHING SYSTEM ARE SHOWN HEREON.
16. THIS PLAN WAS CREATED FOR THE PURPOSES OF SHOWING A PROPOSED SEWAGE DISPOSAL SYSTEM AND IS NOT INTENDED TO BE USED FOR THE REPRODUCTION OF PROPERTY LINES.
17. A FOUR INCH SCHEDULE 40 SOLID PVC PIPE INSPECTION PORT IS TO BE INSTALLED IN THE LEACHING FIELD. PIPE SHALL EXTEND INTO THE TOP OF ONE OF THE INFILTRATORS AND BE FITTED WITH A RUBBER PLUG ON TOP. INSPECTION PORT SHALL BE LOCATED WITHIN A VALVE BOX WITH THE COVER SET AT FINISH GRADE. IT IS RECOMMENDED THAT A PIECE OF #3 REBAR IS TO BE TAPED TO THE SIDE OF THE INSPECTION PORT AND SET FLUSH WITH THE TOP OF THE RUBBER PLUG IN ORDER TO LOCATE IT ONCE BURIED.
18. ALL SYSTEM COMPONENTS SHALL BE MARKED WITH MAGNETIC MARKING TAPE OR A COMPARABLE MEANS IN ORDER TO LOCATE THEM ONCE BURIED.
19. THE OUTLET TEE OF THE SEPTIC TANK SHALL BE EQUIPPED WITH A CLARUS ENVIRONMENTAL EFFLUENT FILTER, MODEL #170-0078, AVAILABLE FROM ZOELLER 1-800-928-7867 OR EQUIVALENT.
20. THE DEPARTMENT OF ENVIRONMENTAL PROTECTION REQUIRES THAT THE EFFLUENT FILTER IN THE OUTLET TEE OF THE SEPTIC TANK BE SERVICED AT LEAST ONCE PER YEAR.
21. COVERS OVER THE INLET AND OUTLET OF THE SEPTIC TANK SHALL BE MARKED TO INDICATE THAT AN EFFLUENT FILTER HAS BEEN INSTALLED IN THE OUTLET TEE.
22. THIS OFFICE REQUIRES THE USE OF CAST IRON MANHOLE COVERS ON THE SEPTIC TANK. THE USE OF PLASTIC COVERS IS NOT ALLOWED.
23. THE SUBJECT PROPERTY IS NOT LOCATED IN A NITROGEN SENSITIVE AREA AS SHOWN ON THE MASS GIS WEBSITE "DEP TITLE 5 SETBACK AREA," TOWN OF ACTON.
24. EXISTING SYSTEM SHALL BE ABANDONED IN ACCORDANCE WITH 310 CMR 15.354 OR REMOVED AS NECESSARY.
25. A MINIMUM SIX INCH LAYER OF ASTM C-33 SAND IS TO BE PLACED UNDER THE FIELD OF INFILTRATORS. IN ADDITION, INFILTRATORS SHALL BE BACKFILLED TO THEIR TOPS WITH ASTM C-33 SAND.
26. THIS DESIGN PROPOSES ALTERATIONS TO THE INTERIOR PLUMBING. IT SHALL BE THE RESPONSIBILITY OF THE OWNER/CONTRACTOR TO CONSULT A LICENSED PLUMBER FOR PRICING AND FEASIBILITY OF THE CHANGES REQUIRED.
27. LIMIT OF THE 200 FOOT RIVERFRONT AREA SHOWN HEREON IS TAKEN FROM A "CONCEPTUAL ANR PLAN 'A' IN ACTON MA" BY STAMSKI AND MCNARY, INC. DATED JANUARY 16, 2004. EDGE OF WETLAND SHOWN HEREON WAS DELINEATED BY OTHERS AND FIELD LOCATED BY THIS OFFICE ON SEPTEMBER 26, 2014.
28. SUBJECT PROPERTY IS LOCATED IN A ZONE 4 AS DEPICTED ON THE "GROUNDWATER PROTECTION DISTRICT MAP OF THE TOWN OF ACTON, JANUARY 1989."
29. SEPTIC TANK SHALL HAVE ITS CONTENTS PUMPED OUT A MINIMUM OF ONCE EVERY TWO YEARS BY A SEPTAGE HAULER LICENSED BY THE TOWN OF ACTON.
30. CIVIL SOLUTIONS SHALL NOT BE HELD RESPONSIBLE FOR THE LOCATIONS OF ANY SUBSURFACE UTILITIES. LOCATIONS OF SUBSURFACE UTILITIES SHOWN HEREON WERE PROVIDED BY OTHERS. SUBJECT PROPERTY MAY CONTAIN OTHER SUBSURFACE UTILITIESNOT SHOWN HEREON. IT SHALL BE THE RESPONSIBILITY OF THE CONTRACTOR TO LOCATE ALL UTILITIES PRIOR TO THE ONSET OF CONSTRUCTION.
31. CONSTRUCTION OF THE CONVENTIONAL LEACHING AREA SHOWN HEREON WOULD REQUIRE RELOCATION OF THE EXISTING WATER LINE 10 FEET OFF THE PROPOSED LEACHING FIELD.

VARIANCES

THERE ARE NO KNOWN VARIANCES REQUIRED.

SEWAGE DISPOSAL SYSTEM PLAN
134 ARLINGTON STREET
ACTON, MASSACHUSETTS
SEPTEMBER 26, 2014

ASSESSOR'S MAP E2, PARCEL 265

CIVIL SOLUTIONS, INC.
P.O. BOX 107, 285 LITTLETON ROAD, UNIT 2, WESTFORD, MA
PHONE: (978) 692-5000 FAX: (978) 692-0386
E-MAIL: civilsolutions@verizon.net
WEBSITE: www.civil-solutions.net

9/26/2014

DESIGN: KCF
DRAWN: KCF
CHECK: KJR

SHEET	SCALE	JOB NO.	DWG. NO.
1 OF 1	1"=20'	14-062	14-062ID

OWNER OF RECORD:
E.M.B. REALTY TRUST
135 HAYWARD ROAD
ACTON, MA 01720

PLAN PREPARED FOR:
EDWARD & SUSAN BENNETT
135 HAYWARD ROAD
ACTON, MA 01720

#	DATE	REVISION	BY