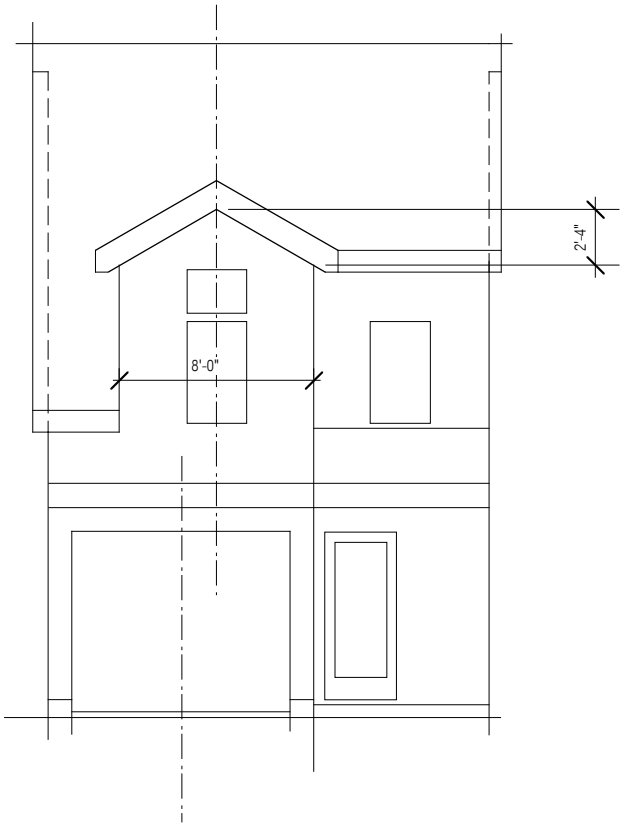

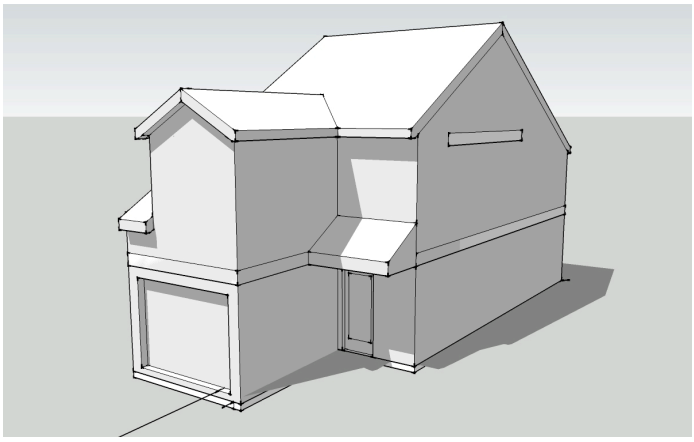

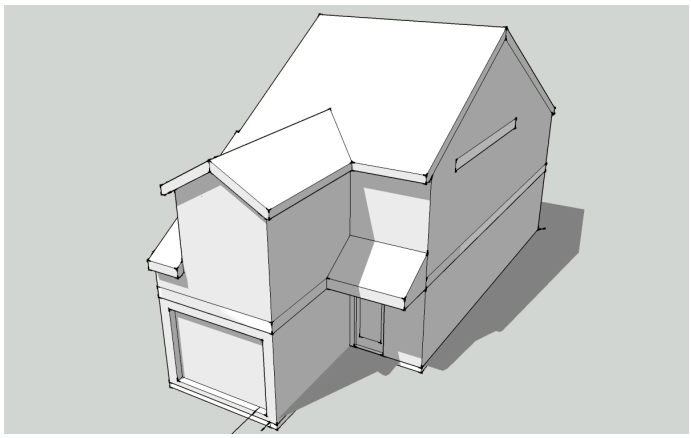

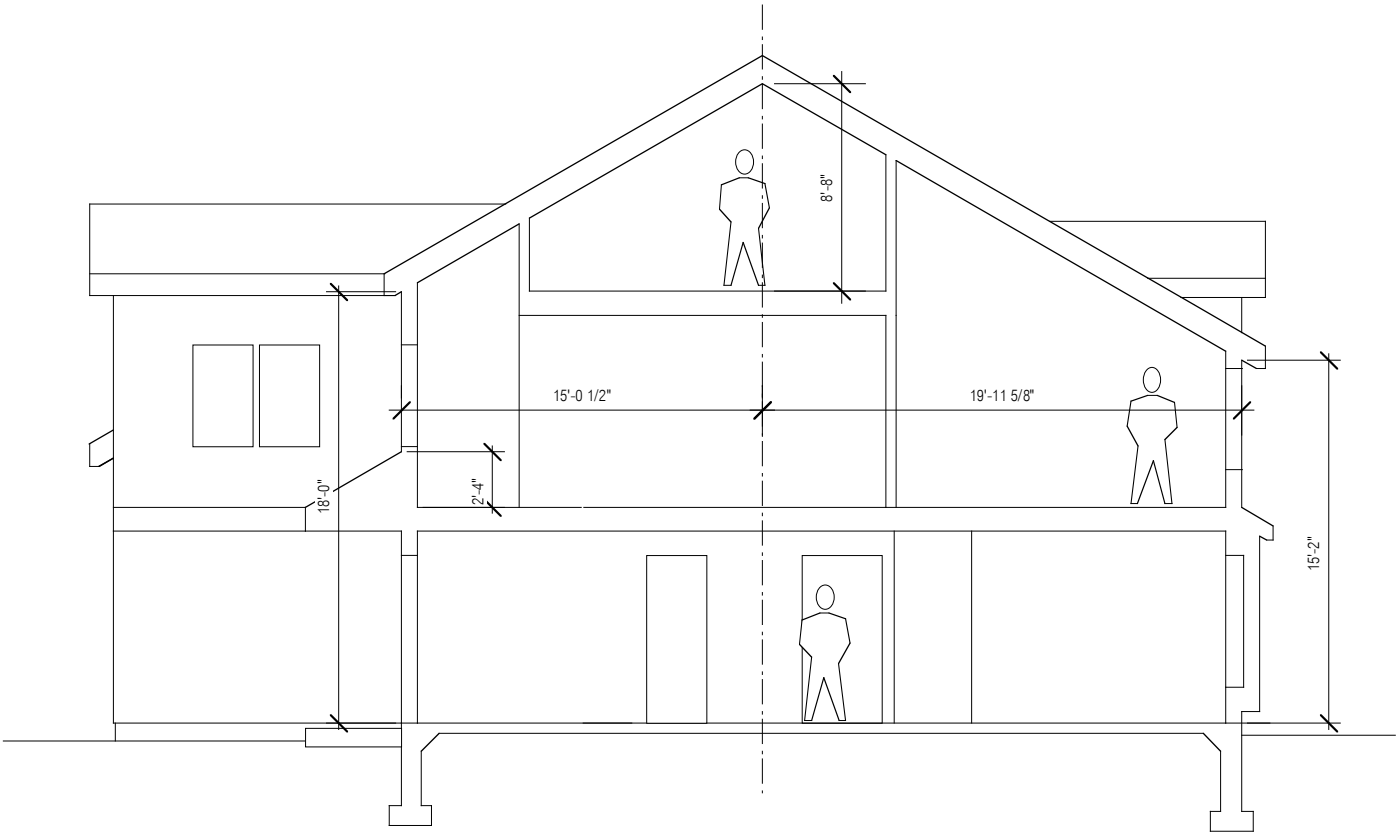

Elev + 3D Scheme A Townhouse

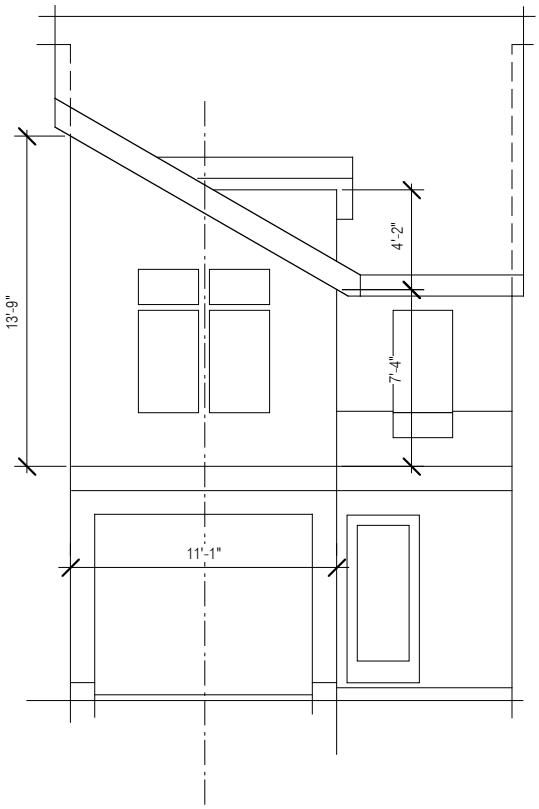

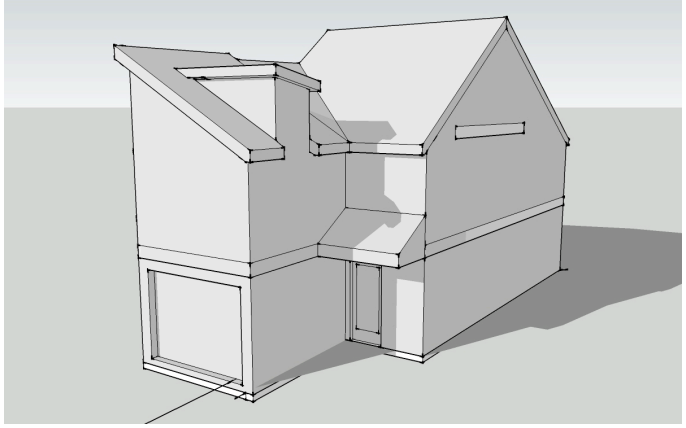

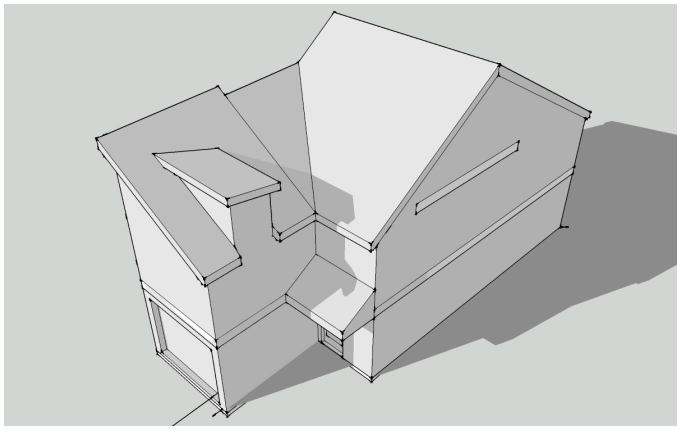

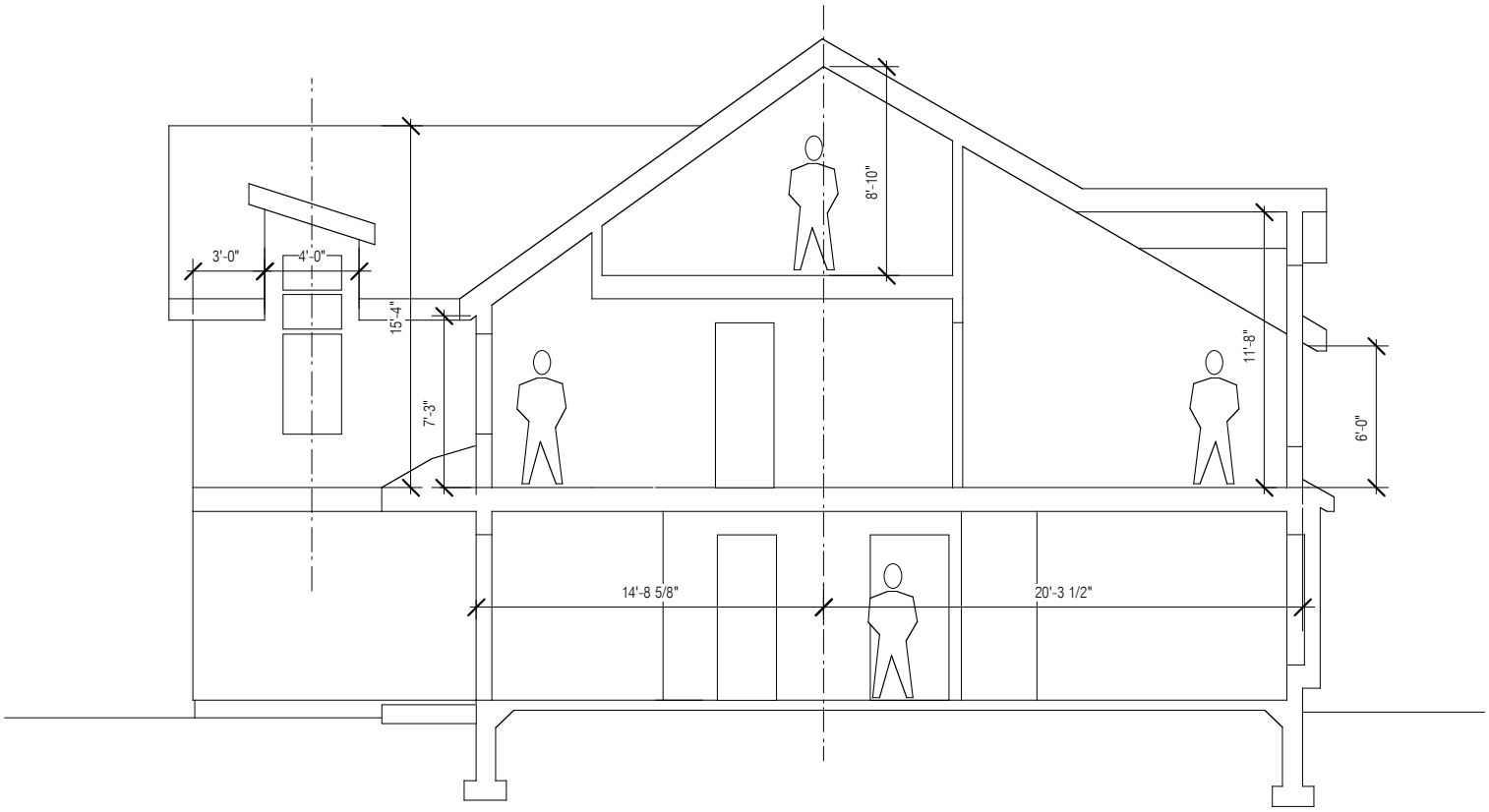

Elev + 3D Scheme B Townhouse

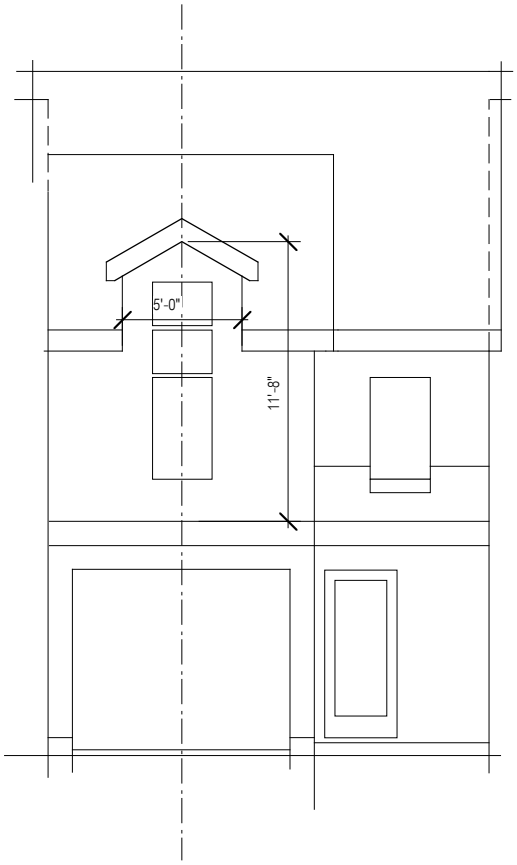

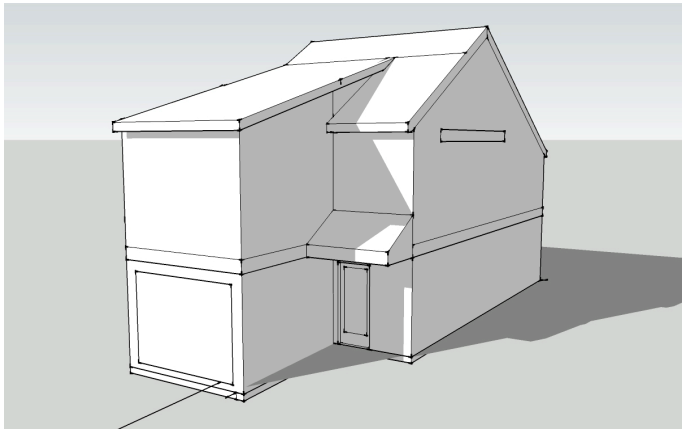

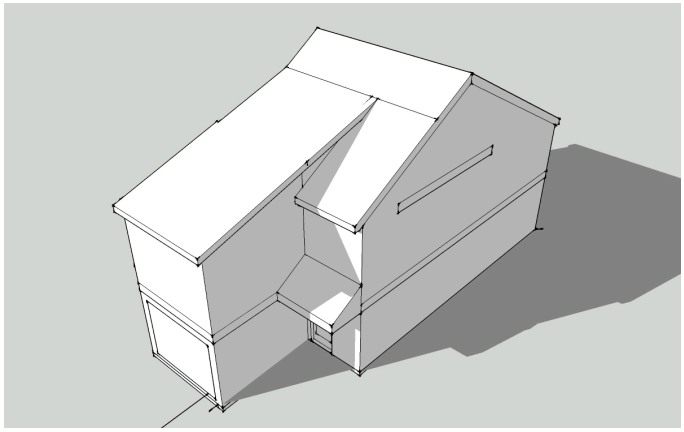

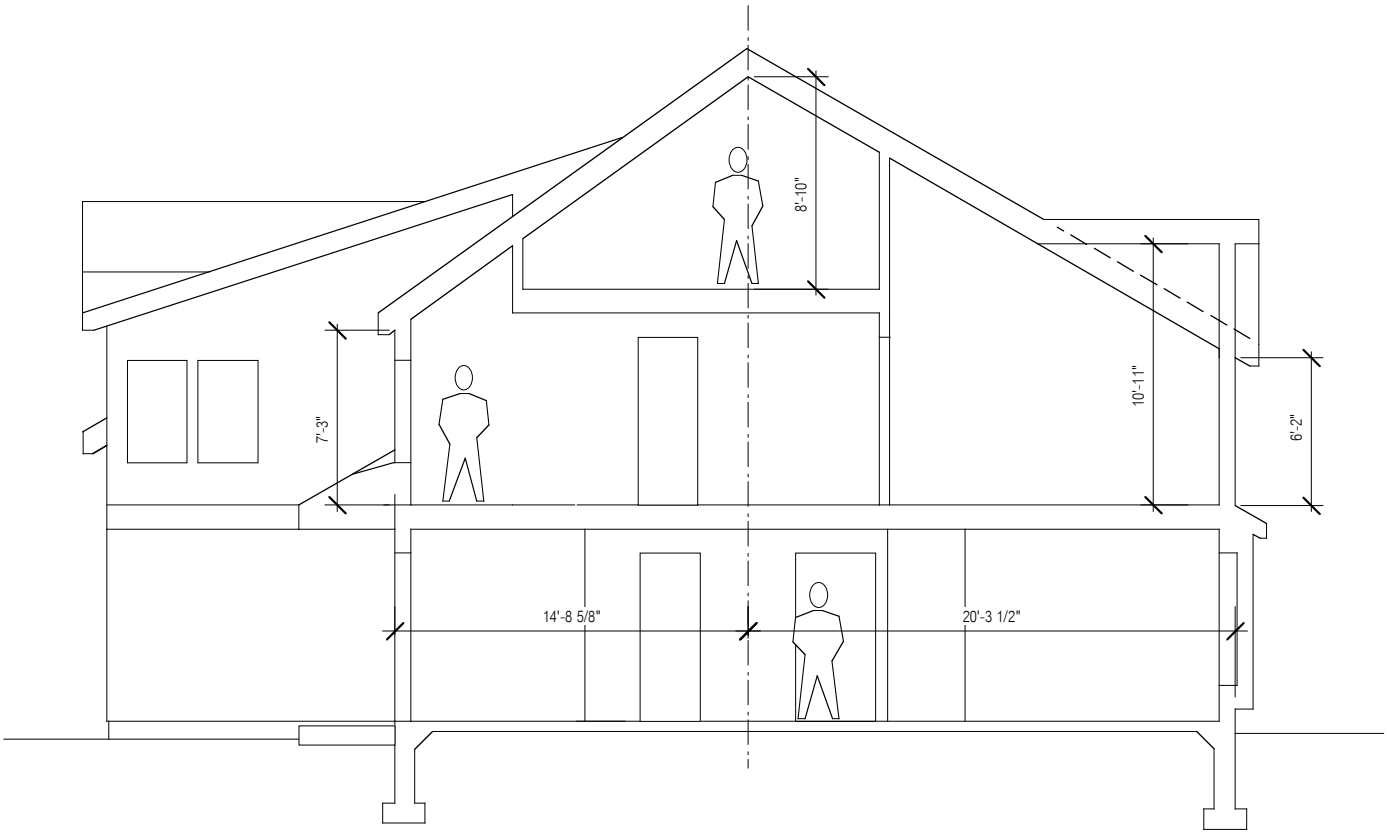

Elev + 3D Scheme C Townhouse

Elev + 3D Scheme D Townhouse